MITSUBISHI ELECTRIC

Programmable Controller

MELSEC Q series

MELSEC-Q
QD77MS Simple Motion Module
User's Manual (Positioning Control)

-QD77MS2
-QD77MS4
-QD77MS16

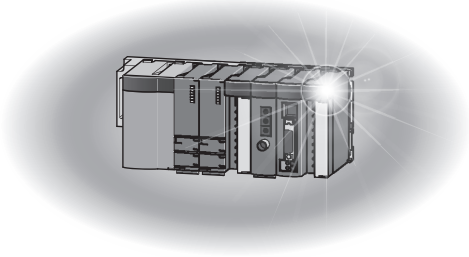

● SAFETY PRECAUTIONS ●

(Please read these instructions before using this equipment.)

Before using this product, please read this manual and the relevant manuals introduced in this manual carefully and pay full attention to safety to handle the product correctly.
The precautions given in this manual are concerned with this product only. Refer to the user's manual of the CPU module to use for a description of the PLC system safety precautions.
In this manual, the safety instructions are ranked as "DANGER" and "CAUTION".

⚠DANGER	Indicates that incorrect handling may cause hazardous conditions, resulting in death or severe injury.
⚠CAUTION	Indicates that incorrect handling may cause hazardous conditions, resulting in medium or slight personal injury or physical damage.

Depending on circumstances, procedures indicated by ⚠ CAUTION may also be linked to serious results.
In any case, it is important to follow the directions for usage.

Please save this manual to make it accessible when required and always forward it to the end user.

For Safe Operations

1. Prevention of electric shocks

⚠DANGER

- Never open the front case or terminal covers while the power is ON or the unit is running, as this may lead to electric shocks.
- Never run the unit with the front case or terminal cover removed. The high voltage terminal and charged sections will be exposed and may lead to electric shocks.
- Never open the front case or terminal cover at times other than wiring work or periodic inspections even if the power is OFF. The insides of the module and servo amplifier are charged and may lead to electric shocks.
- Completely turn off the externally supplied power used in the system before mounting or removing the module, performing wiring work, or inspections. Failing to do so may lead to electric shocks.
- When performing wiring work or inspections, turn the power OFF, wait at least ten minutes, and then check the voltage with a tester, etc. Failing to do so may lead to electric shocks.
- Be sure to ground the module, servo amplifier and servomotor (Ground resistance: 100 Ω or less). Do not ground commonly with other devices.
- The wiring work and inspections must be done by a qualified technician.
- Wire the units after installing the module, servo amplifier and servomotor. Failing to do so may lead to electric shocks or damage.
- Never operate the switches with wet hands, as this may lead to electric shocks.
- Do not damage, apply excessive stress, place heavy things on or sandwich the cables, as this may lead to electric shocks.
- Do not touch the module, servo amplifier, servomotor connector or terminal blocks while the power is ON, as this may lead to electric shocks.
- Do not touch the built-in power supply, built-in grounding or signal wires of the module and servo amplifier, as this may lead to electric shocks.

2. For fire prevention

⚠CAUTION

- Install the module, servo amplifier, servomotor and regenerative resistor on incombustible. Installing them directly or close to combustibles will lead to fire.
- If a fault occurs in the module or servo amplifier, shut the power OFF at the servo amplifier's power source. If a large current continues to flow, fire may occur.
- When using a regenerative resistor, shut the power OFF with an error signal. The regenerative resistor may abnormally overheat due to a fault in the regenerative transistor, etc., and may lead to fire.
- Always take heat measures such as flame proofing for the inside of the control panel where the servo amplifier or regenerative resistor is installed and for the wires used. Failing to do so may lead to fire.
- Do not damage, apply excessive stress, place heavy things on or sandwich the cables, as this may lead to fire.

3. For injury prevention

⚠CAUTION
● Do not apply a voltage other than that specified in the instruction manual on any terminal. Doing so may lead to destruction or damage. ● Do not mistake the terminal connections, as this may lead to destruction or damage. ● Do not mistake the polarity (+ / -), as this may lead to destruction or damage. ● Do not touch the heat radiating fins of module or servo amplifier, regenerative resistor and servomotor, etc., while the power is ON and for a short time after the power is turned OFF. In this timing, these parts become very hot and may lead to burns. ● Always turn the power OFF before touching the servomotor shaft or coupled machines, as these parts may lead to injuries. ● Do not go near the machine during test operations or during operations such as teaching. Doing so may lead to injuries.

4. Various precautions

Strictly observe the following precautions. Mistaken handling of the unit may lead to faults, injuries or electric shocks.

(1) System structure

⚠CAUTION
● Always install a leakage breaker on the module and servo amplifier power source. ● If installation of an electromagnetic contactor for power shut off during an error, etc., is specified in the instruction manual for the servo amplifier, etc., always install the electromagnetic contactor. ● Install the emergency stop circuit externally so that the operation can be stopped immediately and the power shut off. ● Use the module, servo amplifier, servomotor and regenerative resistor with the correct combinations listed in the instruction manual. Other combinations may lead to fire or faults. ● Use the CPU module, base unit, and Simple Motion module with the correct combinations listed in the instruction manual. Other combinations may lead to faults. ● If safety standards (ex., robot safety rules, etc.,) apply to the system using the module, servo amplifier and servomotor, make sure that the safety standards are satisfied. ● Construct a safety circuit externally of the module or servo amplifier if the abnormal operation of the module or servo amplifier differs from the safety directive operation in the system. ● In systems where coasting of the servomotor will be a problem during the forced stop, emergency stop, servo OFF or power supply OFF, use the dynamic brake. ● Make sure that the system considers the coasting amount even when using the dynamic brake. ● In systems where perpendicular shaft dropping may be a problem during the forced stop, emergency stop, servo OFF or power supply OFF, use both the dynamic brake and electromagnetic brake. ● The dynamic brake must be used only on errors that cause the forced stop, emergency stop, or servo OFF. This brake must not be used for normal braking. ● The brake (electromagnetic brake) assembled into the servomotor are for holding applications, and must not be used for normal braking.

⚠CAUTION

- The system must have a mechanical allowance so that the machine itself can stop even if the stroke limits switch is passed through at the max speed.
- Use wires and cables that have a wire diameter, heat resistance and bending resistance compatible with the system.
- Use wires and cables within the length of the range described in the instruction manual.
- The ratings and characteristics of the parts (other than module, servo amplifier and servomotor) used in a system must be compatible with the module, servo amplifier and servomotor.
- Install a cover on the shaft so that the rotary parts of the servomotor are not touched during operation.
- There may be some cases where holding by the electromagnetic brake is not possible due to the life or mechanical structure (when the ball screw and servomotor are connected with a timing belt, etc.). Install a stopping device to ensure safety on the machine side.

(2) Security

⚠CAUTION

- To maintain the security (confidentiality, integrity, and availability) of the programmable controller and the system against unauthorized access, denial-of-service (DoS) attacks, computer viruses, and other cyberattacks from external devices via the network, take appropriate measures such as firewalls, virtual private networks (VPNs), and antivirus solutions.

(3) Parameter settings and programming

⚠DANGER

- Set the parameter values to those that are compatible with the module, servo amplifier, servomotor and regenerative resistor model and the system application. The protective functions may not function if the settings are incorrect.
- The regenerative resistor model and capacity parameters must be set to values that conform to the operation mode and servo amplifier. The protective functions may not function if the settings are incorrect.
- Set the mechanical brake output and dynamic brake output validity parameters to values that are compatible with the system application. The protective functions may not function if the settings are incorrect.
- Set the stroke limit input validity parameter to a value that is compatible with the system application. The protective functions may not function if the setting is incorrect.
- Set the servomotor encoder type (increment, absolute position type, etc.) parameter to a value that is compatible with the system application. The protective functions may not function if the setting is incorrect.
- Use the program commands for the program with the conditions specified in the instruction manual.

⚠DANGER

- Set the sequence function program capacity setting, device capacity, latch validity range, I/O assignment setting, and validity of continuous operation during error detection to values that are compatible with the system application. The protective functions may not function if the settings are incorrect.
- The input devices and data registers assigned to the link will hold the data previous to when communication is terminated by an error, etc. Thus, an error correspondence interlock program specified in the instruction manual must be used.
- Use the interlock program specified in the intelligent function module's instruction manual for the program corresponding to the intelligent function module.

(4) Transportation and installation

⚠CAUTION

- Transport the product with the correct method according to the mass.
- Use the servomotor suspension bolts only for the transportation of the servomotor. Do not transport the servomotor with machine installed on it.
- Do not stack products past the limit.
- When transporting the module or servo amplifier, never hold the connected wires or cables.
- When transporting the servomotor, never hold the cables, shaft or detector.
- When transporting the module or servo amplifier, never hold the front case as it may fall off.
- When transporting, installing or removing the module or servo amplifier, never hold the edges.
- Install the unit according to the instruction manual in a place where the mass can be withstood.
- Do not get on or place heavy objects on the product.
- Always observe the installation direction.
- Keep the designated clearance between the module or servo amplifier and control panel inner surface or the module and servo amplifier, module or servo amplifier and other devices.
- Do not install or operate modules, servo amplifiers or servomotors that are damaged or that have missing parts.
- Do not block the intake/outtake ports of the servo amplifier and servomotor with cooling fan.
- Do not allow conductive matter such as screw or cutting chips or combustible matter such as oil enter the module, servo amplifier or servomotor.
- The module, servo amplifier and servomotor are precision machines, so do not drop or apply strong impacts on them.
- Securely fix the module, servo amplifier and servomotor to the machine according to the instruction manual. If the fixing is insufficient, these may come off during operation.
- Always install the servomotor with reduction gears in the designated direction. Failing to do so may lead to oil leaks.

⚠CAUTION

● Store and use the unit in the following environmental conditions.

Environment	Conditions	
	Module/Servo amplifier	Servomotor
Ambient temperature	According to each instruction manual.	0°C to +40°C (With no freezing)
Ambient humidity	According to each instruction manual.	80% RH or less (With no dew condensation)
Storage temperature	According to each instruction manual.	-20°C to +65°C
Atmosphere	Indoors (where not subject to direct sunlight). No corrosive gases, flammable gases, oil mist or dust must exist	
Altitude	According to each instruction manual	
Vibration	According to each instruction manual	

● When coupling with the servomotor shaft end, do not apply impact such as by hitting with a hammer. Doing so may lead to detector damage.

● Do not apply a load larger than the tolerable load onto the servomotor shaft. Doing so may lead to shaft breakage.

● When not using the module for a long time, disconnect the power line from the module or servo amplifier.

● Place the module and servo amplifier in static electricity preventing vinyl bags and store.

● When storing for a long time, please contact with our sales representative.
Also, execute a trial operation.

● Make sure that the connectors for the servo amplifier and peripheral devices have been securely installed until a click is heard.
Not doing so could lead to a poor connection, resulting in erroneous input and output.

● When fumigants that contain halogen materials such as fluorine, chlorine, bromine, and iodine are used for disinfecting and protecting wooden packaging from insects, they cause malfunction when entering our products.
Please take necessary precautions to ensure that remaining materials from fumigant do not enter our products, or treat packaging with methods other than fumigation (heat method). Additionally, disinfect and protect wood from insects before packing products.

● The module and the servo amplifier must not be used with parts which contain halogen-series flame retardant materials (such as bromine) under coexisting conditions.

(5) Wiring

⚠CAUTION

- Correctly and securely wire the wires. Reconfirm the connections for mistakes and the terminal screws for tightness after wiring. Failing to do so may lead to run away of the servomotor.
- After wiring, install the protective covers such as the terminal covers to the original positions.
- Do not install a phase advancing capacitor, surge absorber or radio noise filter (option FR-BIF) on the output side of the servo amplifier.
- Correctly connect the output side (terminal U, V, W). Incorrect connections will lead the servomotor to operate abnormally.
- Do not connect a commercial power supply to the servomotor, as this may lead to trouble.
- Do not mistake the direction of the surge absorbing diode installed on the DC relay for the control signal output of brake signals, etc. Incorrect installation may lead to signals not being output when trouble occurs or the protective functions not functioning.

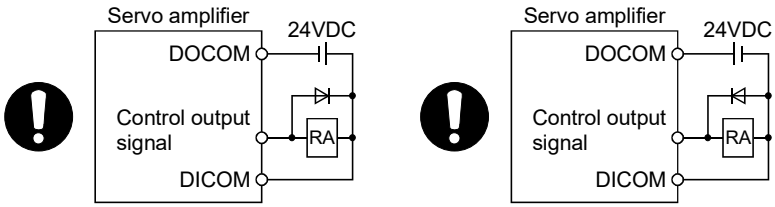

For the sink output interface　　For the source output interface

- Do not connect or disconnect the connection cables between each unit, the encoder cable or PLC expansion cable while the power is ON.
- Securely tighten the cable connector fixing screws and fixing mechanisms. Insufficient fixing may lead to the cables combing off during operation.
- Do not bundle the power line or cables.
- Use applicable solderless terminals and tighten them with the specified torque.
  If any solderless spade terminal is used, it may be disconnected when the terminal screw comes loose, resulting in failure.

(6) Trial operation and adjustment

⚠CAUTION

- Confirm and adjust the program and each parameter before operation. Unpredictable movements may occur depending on the machine.
- Extreme adjustments and changes may lead to unstable operation, so never make them.
- When using the absolute position system function, on starting up, and when the module or absolute position motor has been replaced, always perform a home position return.
- Before starting test operation, set the parameter speed limit value to the slowest value, and make sure that operation can be stopped immediately by the forced stop, etc. if a hazardous state occurs.
- Before starting the operation, confirm the brake function.

(7) Usage methods

⚠CAUTION

- Immediately turn OFF the power if smoke, abnormal sounds or odors are emitted from the module, servo amplifier or servomotor.
- Always execute a test operation before starting actual operations after the program or parameters have been changed or after maintenance and inspection.
- Do not attempt to disassemble and repair the units excluding a qualified technician whom our company recognized.
- Do not make any modifications to the unit.
- Keep the effect or electromagnetic obstacles to a minimum by installing a noise filter or by using wire shields, etc.
  Electromagnetic obstacles may affect the electronic devices used near the module or servo amplifier.
- When using the CE Mark-compliant equipment design, refer to the "EMC Installation Guidelines" (data number IB(NA)-67339) and refer to the corresponding EMC guideline information for the servo amplifiers and other equipment.
- Note that when the reference axis speed is designated for interpolation operation, the speed of the partner axis (2nd axis, 3rd axis and 4th axis) may be larger than the set speed (larger than the speed limit value).
- Use the units with the following conditions.

Item	Conditions
Input power	According to each instruction manual.
Input frequency	According to each instruction manual.
Tolerable momentary power failure	According to each instruction manual.

(8) Corrective actions for errors

⚠CAUTION

- If an error occurs in the self diagnosis of the module or servo amplifier, confirm the check details according to the instruction manual, and restore the operation.
- If a dangerous state is predicted in case of a power failure or product failure, use a servomotor with an electromagnetic brake or install a brake mechanism externally.
- Use a double circuit construction so that the electromagnetic brake operation circuit can be operated by emergency stop signals set externally.

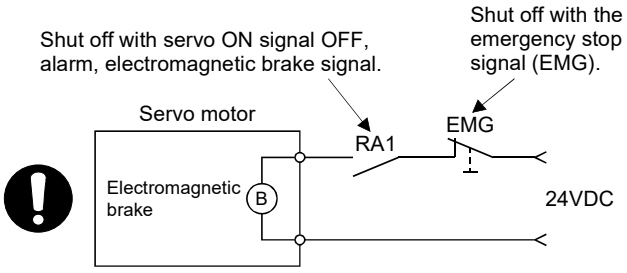

- If an error occurs, remove the cause, secure the safety and then resume operation after alarm release.
- The unit may suddenly resume operation after a power failure is restored, so do not go near the machine. (Design the machine so that personal safety can be ensured even if the machine restarts suddenly.)

(9) Maintenance, inspection and part replacement

⚠CAUTION

- Perform the daily and periodic inspections according to the instruction manual.
- Perform maintenance and inspection after backing up the program and parameters for the module and servo amplifier.
- Do not place fingers or hands in the clearance when opening or closing any opening.
- Periodically replace consumable parts such as batteries according to the instruction manual.
- Do not touch the lead sections such as ICs or the connector contacts.
- Before touching the module, always touch grounded metal, etc. to discharge static electricity from human body. Failure to do so may cause the module to fail or malfunction.
- Do not directly touch the module's conductive parts and electronic components.
  Touching them could cause an operation failure or give damage to the module.
- Do not place the module or servo amplifier on metal that may cause a power leakage or wood, plastic or vinyl that may cause static electricity buildup.
- Do not perform a megger test (insulation resistance measurement) during inspection.
- When replacing the module or servo amplifier, always set the new module settings correctly.

⚠CAUTION

- When the module or absolute position motor has been replaced, carry out a home position return operation using the following method, otherwise position displacement could occur.
  - After writing the servo data to the Simple Motion module using programming software, switch on the power again, then perform a home position return operation.
- After maintenance and inspections are completed, confirm that the position detection of the absolute position detector function is correct.
- Do not drop or impact the battery installed to the module.
  Doing so may damage the battery, causing battery liquid to leak in the battery. Do not use the dropped or impacted battery, but dispose of it.
- Do not short circuit, charge, overheat, incinerate or disassemble the batteries.
- The electrolytic capacitor will generate gas during a fault, so do not place your face near the module or servo amplifier.
- The electrolytic capacitor and fan will deteriorate. Periodically replace these to prevent secondary damage from faults. Please contact with our sales representative.
- Lock the control panel and prevent access to those who are not certified to handle or install electric equipment.
- Do not mount/remove the module and base or terminal block more than 50 times (IEC61131-2-compliant), after the first use of the product. Failure to do so may cause malfunction.
- Do not burn or break a module and servo amplifier. Doing so may cause a toxic gas.

(10) About processing of waste

When you discard module, servo amplifier, a battery (primary battery) and other option articles, please follow the law of each country (area).

⚠CAUTION

- This product is not designed or manufactured to be used in equipment or systems in situations that can affect or endanger human life.
- When considering this product for operation in special applications such as machinery or systems used in passenger transportation, medical, aerospace, atomic power, electric power, or submarine repeating applications, please contact your nearest Mitsubishi sales representative.
- Although this product was manufactured under conditions of strict quality control, you are strongly advised to install safety devices to forestall serious accidents when it is used in facilities where a breakdown in the product is likely to cause a serious accident.

(11) General cautions

- All drawings provided in the instruction manual show the state with the covers and safety partitions removed to explain detailed sections. When operating the product, always return the covers and partitions to the designated positions, and operate according to the instruction manual.

INTRODUCTION

Thank you for purchasing the Mitsubishi Electric MELSEC-Q series programmable controllers.
This manual describes the functions and programming of the Simple Motion module.

Before using this product, please read this manual and the relevant manuals carefully and develop familiarity with the functions and performance of the MELSEC-Q series programmable controller to handle the product correctly.
When applying the program examples introduced in this manual to the actual system, ensure the applicability and confirm that it will not cause system control problems.

Please make sure that the end users read this manual.

REMARK

- Unless otherwise specified, this manual describes the program examples in which the I/O numbers of X/Y00 to X/Y1F are assigned for a Q series Simple Motion module. I/O number assignment is required for using the program examples described in the manual.
  For I/O number assignment, refer to the following.
  QnUCPU User's Manual (Function Explanation, Program Fundamentals)
  Qn(H)/QnPH/QnPRHCPU User's Manual (Function Explanation, Program Fundamentals)
- Operating procedures are explained using GX Works2.

REVISIONS

* The manual number is given on the bottom left of the back cover.

Print Date	* Manual Number	Revision
Feb., 2012	IB(NA)-0300185-A	First edition
Sep., 2013	IB(NA)-0300185-B	[Additional function] Driver communication function, Inverter FR-A700 series, Synchronous encoder via servo amplifier, Operation cycle setting for QD77MS2/QD77MS4 [Additional correction/partial correction] Safety precautions, Relevant manuals, Restrictions by the SERIAL No. and version, Parameters, Monitor data, Control data, List of errors, List of warnings, List of buffer memory address, Serial absolute synchronous encoder cable
Nov., 2014	IB(NA)-0300185-C	[Additional function] Servo driver VCII series manufactured by CKD NIKKI DENSO CO., LTD. (SSCNETⅢ/H compatible), MR-JE-B [Additional correction/partial correction] Restrictions by the SERIAL No. and version, Parameters, Monitor data, List of errors, List of warnings
Nov., 2015	IB(NA)-0300185-D	[Additional function] Servo driver VPH series manufactured by CKD NIKKI DENSO CO., LTD., AlphaStep/5-phase stepping motor driver manufactured by ORIENTAL MOTOR Co., Ltd. [Additional correction/partial correction] RELEVANT MANUALS, Function version, Restrictions by the SERIAL No. and version, Parameters, Monitor data, Stop program, Interpolation control, Speed limit function, Speed change function, Override function, Skip function, Optional data monitor function, Error and warning details, WARRANTY
Feb., 2017	IB(NA)-0300185-E	[Additional function] IAI electric actuator controller manufactured by IAI Corporation [Additional correction/partial correction] Restrictions by the SERIAL No. and version, Types of data, Parameters, Monitor data, Control data, Configuration and roles of QD77MS memory, Optional data monitor function, List of errors
Jun., 2017	IB(NA)-0300185-F	[Additional function] Command generation axis, MR-JE-BF [Additional correction/partial correction] Restrictions by the SERIAL No. and version, Specifications of input/output signals with PLC CPU, Outline of installation, wiring and maintenance, Types and roles of control data, Detailed parameters, System control data, Configuration and roles of QD77MS memory, Forced stop function, Parameter initialization function, Execution data backup function, Mark detection function, QD75MH initial value setting function, Troubleshooting, Error and warning details, List of errors, List of warnings, Servo driver VCII series/VPH series manufactured by CKD NIKKI DENSO CO., LTD., Connection with MR-JE-B(F)

Print Date	✻ Manual Number	Revision
Apr., 2022	IB(NA)-0300185-G	[Additional function] MR-J5(W)-B, Servo amplifier command value error check function [Additional correction/partial correction] For Safe Operations, RELEVANT MANUALS, TERMS, Restrictions by the SERIAL No. and version, Parameters, Monitor data, Configuration and roles of QD77MS memory, Troubleshooting, List of errors, List of warnings, Connection with servo amplifiers, other errors
Sep., 2022	IB(NA)-0300185-H	[Additional correction/partial correction] TERMS, General image of system, Monitor data, Virtual servo amplifier function, Troubleshooting, AlphaStep/5-phase stepping motor driver manufactured by ORIENTAL MOTOR Co., Ltd., other errors
Oct., 2023	IB(NA)-0300185-J	[Additional correction/partial correction] Servo driver VCII series/VPH series manufactured by CKD NIKKI DENSO CO., LTD., AlphaStep/5-phase stepping motor driver manufactured by ORIENTAL MOTOR Co., Ltd., IAI electric actuator controller manufactured by IAI Corporation, INFORMATION AND SERVICES, other errors

Japanese Manual Version IB-0300184

This manual confers no industrial property rights or any rights of any other kind, nor does it confer any patent licenses. Mitsubishi Electric Corporation cannot be held responsible for any problems involving industrial property rights which may occur as a result of using the contents noted in this manual.

© 2012 MITSUBISHI ELECTRIC CORPORATION

CONTENTS

SAFETY PRECAUTIONS ..... A- 1
INTRODUCTION A-11
REVISIONS A-12
CONTENTS A-14
COMPLIANCE WITH THE EMC AND LOW VOLTAGE DIRECTIVES A-22
RELEVANT MANUALS A-22
MANUAL PAGE ORGANIZATION A-24
TERMS A-25
PACKING LIST A-26

Section 1 Product Specifications and Handling

1. Product Outline 1- 1 to 1-30

1.1 Positioning control 1- 2
1.1.1 Features of QD77MS 1- 2
1.1.2 Purpose and applications of positioning control 1- 6
1.1.3 Mechanism of positioning control 1- 8
1.1.4 Overview of positioning control functions 1- 9
1.1.5 Outline design of positioning system 1-19
1.1.6 Communicating signals between QD77MS and each module 1-20
1.2 Flow of system operation 1-24
1.2.1 Flow of all processes 1-24
1.2.2 Outline of starting 1-26
1.2.3 Outline of stopping 1-28
1.2.4 Outline for restarting 1-30

2. System Configuration 2- 1 to 2-12

2.1 General image of system 2- 2
2.2 Component list 2- 4
2.3 Applicable system 2- 8
2.4 How to check the function version and SERIAL No. 2-10
2.5 Restrictions by the SERIAL No. and version 2-11

3. Specifications and Functions 3- 1 to 3-50

3.1 Performance specifications 3- 2
3.2 List of functions 3- 4
3.2.1 QD77MS control functions 3- 4
3.2.2 QD77MS main functions 3- 7
3.2.3 QD77MS sub functions 3- 9
3.2.4 QD77MS common functions 3-11
3.2.5 Combination of QD77MS main functions and sub functions 3-14
3.3 Specifications of input/output signals with PLC CPU 3-16
3.3.1 List of input/output signals with PLC CPU 3-16
3.3.2 Details of input signals (QD77MS → PLC CPU) 3-19

3.3.3 Details of output signals (PLC CPU → QD77MS) 3-21
3.4 Specifications of interfaces with external devices 3-23
3.4.1 Electrical specifications of input signals 3-23
3.4.2 Signal layout for external input connection connector 3-25
3.4.3 List of input signal details 3-27
3.4.4 Interface internal circuit 3-30
3.5 External circuit design 3-36

4. Installation, Wiring and Maintenance of the Product 4- 1 to 4-20

4.1 Outline of installation, wiring and maintenance 4- 2
4.1.1 Installation, wiring and maintenance procedures 4- 2
4.1.2 Names of each part 4- 3
4.1.3 Handling precautions 4- 5
4.2 Installation 4- 7
4.2.1 Precautions for installation 4- 7
4.3 Wiring 4- 8
4.3.1 Precautions for wiring 4- 8
4.4 Confirming the installation and wiring 4-19
4.4.1 Items to confirm when installation and wiring are completed 4-19
4.5 Maintenance 4-20
4.5.1 Precautions for maintenance 4-20
4.5.2 Disposal instructions 4-20

5. Data Used for Positioning Control 5- 1 to 5-206

5.1 Types of data 5- 2
5.1.1 Parameters and data required for control 5- 2
5.1.2 Setting items for positioning parameters 5- 6
5.1.3 Setting items for HPR parameters 5- 8
5.1.4 Setting items for expansion parameters 5- 9
5.1.5 Setting items for servo parameters 5- 9
5.1.6 Setting items for positioning data 5-10
5.1.7 Setting items for block start data 5-12
5.1.8 Setting items for condition data 5-13
5.1.9 Types and roles of monitor data 5-14
5.1.10 Types and roles of control data 5-19
5.2 List of parameters 5-23
5.2.1 Basic parameters 1 5-23
5.2.2 Basic parameters 2 5-29
5.2.3 Detailed parameters 1 5-30
5.2.4 Detailed parameters 2 5-41
5.2.5 HPR basic parameters 5-54
5.2.6 HPR detailed parameters 5-61
5.2.7 Expansion parameters 5-66
5.2.8 Servo parameters 5-71
5.3 List of positioning data 5-83
5.4 List of block start data 5-99
5.5 List of condition data 5-104
5.6 List of monitor data 5-114
5.6.1 System monitor data 5-114

5.6.2 Axis monitor data 5-128
5.7 List of control data 5-160
5.7.1 System control data 5-160
5.7.2 Axis control data 5-168

6. Sequence Program Used for Positioning Control 6- 1 to 6-76

6.1 Precautions for creating program 6- 2
6.2 List of devices used 6- 6
6.3 Creating a program 6-16
6.3.1 General configuration of program 6-16
6.3.2 Positioning control operation program 6-17
6.4 Positioning program examples 6-21
6.5 Program details 6-53
6.5.1 Initialization program 6-53
6.5.2 Start details setting program 6-54
6.5.3 Start program 6-56
6.5.4 Continuous operation interrupt program 6-68
6.5.5 Restart program 6-70
6.5.6 Stop program 6-73

7. Memory Configuration and Data Process 7- 1 to 7-22

7.1 Configuration and roles of QD77MS memory 7- 2
7.1.1 Configuration and roles of QD77MS memory 7- 2
7.1.2 Buffer memory area configuration 7- 5
7.2 Data transmission process 7- 8

Section 2 Control Details and Setting

8. HPR Control 8- 1 to 8-20

8.1 Outline of HPR control 8- 2
8.1.1 Two types of HPR control 8- 2
8.2 Machine HPR 8- 6
8.2.1 Outline of the machine HPR operation 8- 6
8.2.2 Machine HPR method 8- 7
8.2.3 HPR method (1): Proximity dog method 8- 8
8.2.4 HPR method (2): Count method 1) 8-10
8.2.5 HPR method (3): Count method 2) 8-12
8.2.6 HPR method (4): Data set method 8-14
8.2.7 HPR method (5): Scale origin signal detection method 8-15
8.3 Fast HPR 8-18
8.3.1 Outline of the fast HPR operation 8-18
8.4 Selection of the HPR setting condition 8-20
8.4.1 Outline of the HPR setting condition 8-20

9. Major Positioning Control 9- 1 to 9-134

9.1 Outline of major positioning controls 9- 2
9.1.1 Data required for major positioning control 9- 4
9.1.2 Operation patterns of major positioning controls 9- 5
9.1.3 Designating the positioning address 9-15
9.1.4 Confirming the current value 9-16
9.1.5 Control unit "degree" handling 9-18
9.1.6 Interpolation control 9-21
9.2 Setting the positioning data 9-26
9.2.1 Relation between each control and positioning data 9-26
9.2.2 1-axis linear control 9-28
9.2.3 2-axis linear interpolation control 9-32
9.2.4 3-axis linear interpolation control 9-38
9.2.5 4-axis linear interpolation control 9-44
9.2.6 1-axis fixed-feed control 9-49
9.2.7 2-axis fixed-feed control (interpolation) 9-52
9.2.8 3-axis fixed-feed control (interpolation) 9-54
9.2.9 4-axis fixed-feed control (interpolation) 9-59
9.2.10 2-axis circular interpolation control with sub point designation 9-62
9.2.11 2-axis circular interpolation control with center point designation 9-68
9.2.12 1-axis speed control 9-76
9.2.13 2-axis speed control 9-79
9.2.14 3-axis speed control 9-83
9.2.15 4-axis speed control 9-87
9.2.16 Speed-position switching control (INC mode) 9-92
9.2.17 Speed-position switching control (ABS mode) 9-103
9.2.18 Position-speed switching control 9-112
9.2.19 Current value changing 9-122
9.2.20 NOP instruction 9-127
9.2.21 JUMP instruction 9-128

9.2.22 LOOP 9-130
9.2.23 LEND 9-132

10. High-Level Positioning Control 10- 1 to 10-30

10.1 Outline of high-level positioning control 10- 2
10.1.1 Data required for high-level positioning control 10- 3
10.1.2 "Block start data" and "condition data" configuration 10- 4
10.2 High-level positioning control execution procedure 10- 6
10.3 Setting the block start data 10- 7
10.3.1 Relation between various controls and block start data 10- 7
10.3.2 Block start (normal start) 10- 8
10.3.3 Condition start 10-10
10.3.4 Wait start 10-11
10.3.5 Simultaneous start 10-12
10.3.6 Repeated start (FOR loop) 10-13
10.3.7 Repeated start (FOR condition) 10-14
10.3.8 Restrictions when using the NEXT start 10-15
10.4 Setting the condition data 10-16
10.4.1 Relation between various controls and the condition data 10-16
10.4.2 Condition data setting examples 10-19
10.5 Multiple axes simultaneous start control 10-21
10.6 Start program for high-level positioning control 10-26
10.6.1 Starting high-level positioning control 10-26
10.6.2 Example of a start program for high-level positioning control 10-27

11. Manual Control 11- 1 to 11-32

11.1 Outline of manual control 11- 2
11.1.1 Three manual control methods 11- 2
11.2 JOG operation 11- 4
11.2.1 Outline of JOG operation 11- 4
11.2.2 JOG operation execution procedure 11- 7
11.2.3 Setting the required parameters for JOG operation 11- 8
11.2.4 Creating start programs for JOG operation 11-10
11.2.5 JOG operation example 11-12
11.3 Inching operation 11-15
11.3.1 Outline of inching operation 11-15
11.3.2 Inching operation execution procedure 11-18
11.3.3 Setting the required parameters for inching operation 11-19
11.3.4 Creating a program to start the inching operation 11-20
11.3.5 Inching operation example 11-22
11.4 Manual pulse generator operation 11-24
11.4.1 Outline of manual pulse generator operation 11-24
11.4.2 Manual pulse generator operation execution procedure 11-28
11.4.3 Setting the required parameters for manual pulse generator operation 11-29
11.4.4 Creating a program to enable/disable the manual pulse generator operation 11-30

12. Expansion Control 12- 1 to 12-34

12.1 Speed-torque control 12- 2
12.1.1 Outline of speed-torque control 12- 2

12.1.2 Setting the required parameters for speed-torque control 12- 4
12.1.3 Setting the required data for speed-torque control 12- 5
12.1.4 Operation of speed-torque control 12- 7
12.2 Synchronous control 12-33

13. Control Sub Functions 13- 1 to 13-110

13.1 Outline of sub functions 13- 2
13.1.1 Outline of sub functions 13- 2
13.2 Sub functions specifically for machine HPR 13- 4
13.2.1 HPR retry function 13- 4
13.2.2 HP shift function 13- 8
13.3 Functions for compensating the control 13-11
13.3.1 Backlash compensation function 13-11
13.3.2 Electronic gear function 13-13
13.3.3 Near pass function 13-22
13.4 Functions to limit the control 13-24
13.4.1 Speed limit function 13-24
13.4.2 Torque limit function 13-26
13.4.3 Software stroke limit function 13-30
13.4.4 Hardware stroke limit function 13-37
13.4.5 Forced stop function 13-41
13.5 Functions to change the control details 13-44
13.5.1 Speed change function 13-44
13.5.2 Override function 13-51
13.5.3 Acceleration/deceleration time change function 13-54
13.5.4 Torque change function 13-59
13.5.5 Target position change function 13-63
13.6 Absolute position system 13-67
13.7 Other functions 13-69
13.7.1 Step function 13-69
13.7.2 Skip function 13-74
13.7.3 M code output function 13-78
13.7.4 Teaching function 13-82
13.7.5 Command in-position function 13-88
13.7.6 Acceleration/deceleration processing function 13-91
13.7.7 Pre-reading start function 13-94
13.7.8 Deceleration start flag function 13-97
13.7.9 Stop command processing for deceleration stop function 13-100
13.7.10 Speed control 10 x multiplier setting for degree axis function 13-103
13.7.11 Operation setting for incompletion of HPR function 13-106
13.8 Servo ON/OFF 13-108
13.8.1 Servo ON/OFF 13-108
13.8.2 Follow up function 13-110

14. Common Functions 14- 1 to 14-70

14.1 Outline of common functions 14- 2
14.2 Parameter initialization function 14- 4
14.3 Execution data backup function 14- 6
14.4 External signal selection function 14- 9
14.5 External I/O signal logic switching function 14-15

14.6 History monitor function 14-17
14.7 Amplifier-less operation function 14-21
14.8 Virtual servo amplifier function 14-28
14.9 Driver communication function 14-32
14.10 Mark detection function 14-40
14.11 Optional data monitor function 14-52
14.12 Module error collection function 14-58
14.13 Connect/disconnect function of SSCNET communication 14-59
14.14 QD75MH initial value setting function 14-65
14.15 Servo amplifier command value error check function 14-67
14.16 Hot line forced stop function 14-69

15. Dedicated Instructions 15- 1 to 15-18

15.1 List of dedicated instructions 15- 2
15.2 Interlock during dedicated instruction is executed 15- 2
15.3 ZP.PSTRT1, ZP.PSTRT2, ZP.PSTRT3, ZP.PSTRT4 ..... 15- 3
15.4 ZP.TEACH1, ZP.TEACH2, ZP.TEACH3, ZP.TEACH4 ..... 15- 7
15.5 ZP.PFWRT 15-11
15.6 ZP.PINIT 15-15

16. Troubleshooting 16- 1 to 16-66

16.1 Checking errors using GX Works2 ..... 16- 2
16.2 Troubleshooting 16- 5
16.3 Error and warning details 16- 9
16.4 List of errors 16-16
16.4.1 QD77MS detection error 16-16
16.4.2 Servo amplifier detection error 16-52
16.5 List of warnings 16-54
16.5.1 QD77MS detection warning 16-54
16.5.2 Servo amplifier detection warning 16-66

Appendices Appendix- 1 to Appendix-122

Appendix 1 List of buffer memory addresses ..... Appendix- 2
Appendix 2 Connection with servo amplifiers Appendix-29
Appendix 2.1 SSCNETⅢ cables Appendix-30
Appendix 2.2 Serial absolute synchronous encoder cable Appendix-34
Appendix 2.3 SSCNETⅢ cable (SC-J3BUS_M-C) manufactured by Mitsubishi Electric System & Service Appendix-38
Appendix 3 Connection with external device Appendix-39
Appendix 3.1 Connector Appendix-39
Appendix 3.2 External input signal cable Appendix-41
Appendix 3.3 Manual pulse generator (MR-HDP01) Appendix-47
Appendix 4 Comparisons with positioning modules/LD77MH models Appendix-48
Appendix 4.1 Differences with QD75MH models Appendix-48
Appendix 4.2 Differences with LD77MH models Appendix-63
Appendix 5 When using GX Works2 ..... Appendix-69
Appendix 6 Compatible devices with SSCNETⅢ(/H) Appendix-70
Appendix 6.1 Servo driver VCII series/VPH series manufactured by CKD NIKKI DENSO CO., LTD. Appendix-70

Appendix 6.2 Inverter FR-A700 series Appendix-77
Appendix 6.3 AlphaStep/5-phase stepping motor driver manufactured by ORIENTAL MOTOR Co., Ltd. Appendix-86
Appendix 6.4 IAI electric actuator controller manufactured by IAI Corporation Appendix-95
Appendix 6.5 Connection with MR-JE-B(F).....Appendix-103
Appendix 6.6 Connection with MR-J5(W)-B.....Appendix-112
Appendix 7 External dimension drawing Appendix-120

COMPLIANCE WITH THE EMC AND LOW VOLTAGE DIRECTIVES

(1) For programmable controller system

To configure a system meeting the requirements of the EMC and Low Voltage Directives when incorporating the Mitsubishi programmable controller (EMC and Low Voltage Directives compliant) into other machinery or equipment, refer to the Safety Guidelines provided with the main base unit. Also, refer to "Example of measure against noise for compliance with the EMC directive" of the Section 4.3.1 of this manual.
The CE mark on the side of the programmable controller indicates compliance with EMC and Low Voltage Directives.

(2) For the product

To make this product comply with EMC and Low Voltage Directives, refer to Section 4.3.1 "Precautions for wiring".

RELEVANT MANUALS

(1) Simple Motion module

Manual Name <Manual number (model code)>	Description
MELSEC-Q QD77MS Simple Motion Module User's Manual (Positioning Control) <IB-0300185, 1XB947>	Specifications of the QD77MS and information on how to establish a system, maintenance and inspection, and troubleshooting Functions, programming and buffer memory for the positioning control of the QD77MS
MELSEC-Q/L QD77MS/QD77GF/LD77MS/LD77MH Simple Motion Module User's Manual (Synchronous Control) <IB-0300174, 1XB943>	Functions, programming and buffer memory for the synchronous control of the Simple Motion module

(2) CPU module

Manual Name <Manual number (model code)>	Description
QCPU User's Manual (Hardware Design, Maintenance and Inspection) <SH-080483ENG, 13JR73>	Specifications of the hardware (CPU modules, power supply modules, base units, batteries, and memory cards), system maintenance and inspection, and troubleshooting
QnUCPU User's Manual (Function Explanation, Program Fundamentals) <SH-080807ENG, 13JZ27>	Functions, devices, and programming of the CPU module
Qn(H)/QnPH/QnPRHCPU User's Manual (Function Explanation, Program Fundamentals) <SH-080808ENG, 13JZ28>	Functions, devices, and programming of the CPU module

(3) Programming tool

Manual Name <Manual number (model code)>	Description
GX Works2 Version1 Operating Manual (Common) <SH-080779ENG, 13JU63>	System configuration, parameter settings, and online operations (common to Simple project and Structured project) of GX Works2
GX Works2 Version1 Operating Manual (Intelligent Function Module) <SH-080921ENG, 13JU69>	Parameter settings, monitoring, and operations of the predefined protocol support function of intelligent function modules, using GX Works2

(4) Servo amplifier

Manual Name <Manual number (model code)>	Description
MR-J5-B/MR-J5W-B User's Manual (Introduction) <IB-0300578ENG, ---->	Specifications, parts names, start-up procedure, and others for the MR-J5(W)-B servo amplifier
MR-J5 User's Manual (Hardware) <SH-030298ENG, ---->	Installation, wiring, option usage, and others for the MR-J5 servo amplifier
MR-J5 User's Manual (Function) <SH-030300ENG, ---->	Functions, control mode, and others for the MR-J5 servo amplifier
MR-J5 User's Manual (Adjustment) <SH-030306ENG, ---->	Procedure, method, functions, and others for adjusting the operating status for the MR-J5 servo amplifier
MR-J5 User's Manual (Troubleshooting) <SH-030312ENG, ---->	Alarms, warnings, and others for the MR-J5 servo amplifier
MR-J5-B/MR-J5W-B User's Manual (Parameters) <IB-0300581ENG, ---->	Parameters for the MR-J5(W)-B servo amplifier
SSCNETⅢ/H Interface AC Servo MR-J4-_B_(-RJ) Servo Amplifier Instruction Manual <SH-030106, 1CW805>	I/O signals, parts names, parameters, start-up procedure, and others for MR-J4-_B_(-RJ) servo amplifier
SSCNETⅢ/H Interface Multi-axis AC Servo MR-J4W2-_B/MR-J4W3-_B/MR-J4W2-0303B6 Servo Amplifier Instruction Manual <SH-030105, 1CW806>	I/O signals, parts names, parameters, start-up procedure, and others for multi-axis AC servo MR-J4W2-_B/MR-J4W3-_B/MR-J4W2-0303B6 servo amplifier
SSCNETⅢ Interface MR-J3-_B Servo Amplifier Instruction Manual <SH-030051, 1CW202>	I/O signals, parts names, parameters, start-up procedure, and others for MR-J3-_B servo amplifier
SSCNETⅢ Compatible Linear Servo MR-J3-_B-RJ004(U_) Instruction Manual <SH-030054, 1CW943>	I/O signals, parts names, parameters, start-up procedure, and others for linear servo MR-J3-_B-RJ004(U_)
SSCNETⅢ Fully Closed Loop Control MR-J3-_B-RJ006 Servo Amplifier Instruction Manual <SH-030056, 1CW304>	I/O signals, parts names, parameters, start-up procedure, and others for fully closed loop control MR-J3-_B-RJ006 servo amplifier
SSCNETⅢ Interface 2-axis AC Servo Amplifier MR-J3W-0303BN6/MR-J3W-_B Servo Amplifier Instruction Manual <SH-030073, 1CW604>	I/O signals, parts names, parameters, start-up procedure, and others for 2-axis AC servo amplifier MR-J3W-0303BN6/MR-J3W-_B servo amplifier

Manual Name <Manual number (model code)>	Description
SSCNETⅢ Interface Direct Drive Servo MR-J3-_B-RJ080W Instruction Manual <SH-030079, 1CW601>	I/O signals, parts names, parameters, start-up procedure, and others for direct drive servo MR-J3-_B-RJ080W
SSCNETⅢ Interface Drive Safety Integrated MR-J3-_B Safety Servo Amplifier Instruction Manual <SH-030084, ---- >	I/O signals, parts names, parameters, start-up procedure, and others for safety integrated MR-J3-_B safety servo amplifier
SSCNETⅢ/H Interface AC Servo MR-JE-_B Servo Amplifier Instruction Manual <SH-030152, 1CW750>	I/O signals, parts names, parameters, start-up procedure, and others for MR-JE-_B servo amplifier
SSCNETⅢ/H Interface AC Servo With Functional Safety MR-JE-_BF Servo Amplifier Instruction Manual <SH-030258, ---- >	I/O signals, parts names, parameters, start-up procedure, and others for functional safety MR-JE-_BF servo amplifier

MANUAL PAGE ORGANIZATION

■ The symbols used in this manual are shown below.

• A serial No. is inserted in the "*" mark.

Symbol	Description	Reference
[Pr. *]	Symbol that indicates positioning parameter and HPR parameter item.	Chapter 5
[Da. *]	Symbol that indicates positioning data, block start data and condition data item.	
[Md. *]	Symbol that indicates monitor data item.	
[Cd. *]	Symbol that indicates control data item.	
QD77MS2	Symbol that indicates correspondence to only QD77MS2.	—
QD77MS4	Symbol that indicates correspondence to only QD77MS4.	
QD77MS16	Symbol that indicates correspondence to only QD77MS16.	

■ Representation of numerical values used in this manual.

- Buffer memory addresses, error codes and warning codes are represented in decimal.
- X/Y devices are represented in hexadecimal.
- Setting data and monitor data are represented in decimal or hexadecimal. Data ended by "H" or "h" is represented in hexadecimal.

(Example) 10.....Decimal

10H.....Hexadecimal

TERMS

Unless otherwise specified, this manual uses the following terms.

Term	Description
PLC CPU	The abbreviation for the MELSEC-Q series PLC CPU module
QCPU	Another term for the MELSEC-Q series PLC CPU module
Simple Motion module	The abbreviation for the QD77MS Simple Motion module compatible with SSCNETⅢ/H, SSCNETⅢ
MR-J5(W)-B	MR-J5-_B_(-RJ)/MR-J5W_-_B servo amplifier series
MR-J5-B-RJ	MR-J5-_B_-RJ servo amplifier series
MR-J5W2-B	MR-J5W2-_B servo amplifier series
MR-J4(W)-B	MR-J4-_B_(-RJ)/MR-J4W_-_B servo amplifier series
MR-J4-B-RJ	MR-J4-_B_-RJ servo amplifier series
MR-J4W2-B	MR-J4W2-_B servo amplifier series
MR-J3(W)-B	MR-J3-_B_(-RJ)/MR-J3W-_B servo amplifier series
MR-JE-B(F)	MR-JE-_B(F) servo amplifier series
Programming tool	A generic term for GX Works2 and MR Configurator2
GX Works2	The product name of the software package for the MELSEC programmable controllers (Version 1.77F or later)
MR Configurator2	The product name of the setup software for the servo amplifier (Version 1.09K or later)
Intelligent function module	A MELSEC-Q/L series module that has functions other than input or output, such as A/D converter module and D/A converter module
Servo amplifier	A generic term for a drive unit Unless specified in particular, indicates the motor driver unit of the sequential command method which is controlled by the Simple Motion module (belonging to own station).
Axis	Another term for a servo amplifier
HPR	A generic term for "Home position return"
HP	A generic term for "Home position"
SSCNETⅢ/H (Note)	High speed synchronous communication network between QD77MS and servo amplifier
SSCNETⅢ (Note)	
Servo network	A generic term for SSCNETⅢ/H, SSCNETⅢ

(Note): SSCNET: Servo System Controller NETwork

PACKING LIST

The following items are included in the package of this product. Before use, check that all the items are included.

(1) QD77MS2

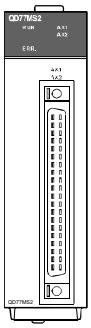

QD77MS2

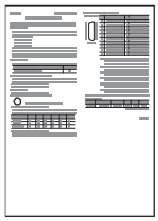

Before Using the Product

(2) QD77MS4

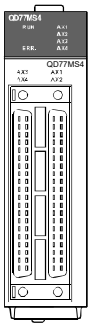

QD77MS4

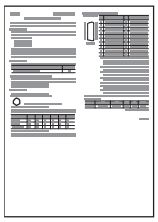

Before Using the Product

(3) QD77MS16

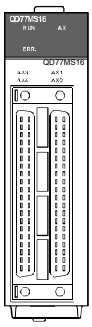

QD77MS16

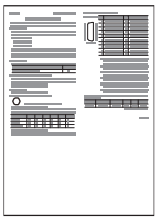

Before Using the Product

Section 1 Product Specifications and Handling

Section 1 is configured for the following purposes (1) to (5).

(1) To understand the outline of positioning control, and the Simple Motion module specifications and functions
(2) To carry out actual work such as installation and wiring
(3) To set parameters and data required for positioning control
(4) To create a sequence program required for positioning control
(5) To understand the memory configuration and data transmission process

When diverting any of the program examples introduced in this manual to the actual system, fully verify that there are no problems in the controllability of the target system. Read "Section 2" for details on each control.

Chapter 1 Product Outline ..... 1- 1 to 1- 30
Chapter 2 System Configuration..... 2- 1 to 2- 12
Chapter 3 Specifications and Functions..... 3- 1 to 3- 50
Chapter 4 Installation, Wiring and Maintenance of the Product ..... 4- 1 to 4- 20
Chapter 5 Data Used for Positioning Control ..... 5- 1 to 5-206
Chapter 6 Sequence Program Used for Positioning Control..... 6- 1 to 6- 76
Chapter 7 Memory Configuration and Data Process ..... 7- 1 to 7- 22

MEMO

Chapter 1 Product Outline

The purpose and outline of positioning control using the Simple Motion module are explained in this chapter.
Reading this chapter will help you understand what can be done using the positioning system and which procedure to use for a specific purpose.

By understanding "What can be done", and "Which procedure to use" beforehand, the positioning system can be structured smoothly.

1.1 Positioning control 1- 2
1.1.1 Features of QD77MS 1- 2
1.1.2 Purpose and applications of positioning control 1- 6
1.1.3 Mechanism of positioning control 1- 8
1.1.4 Overview of positioning control functions 1- 9
1.1.5 Outline design of positioning system 1-19
1.1.6 Communicating signals between QD77MS and each module 1-20
1.2 Flow of system operation 1-24
1.2.1 Flow of all processes 1-24
1.2.2 Outline of starting 1-26
1.2.3 Outline of stopping 1-28
1.2.4 Outline for restarting 1-30

1.1 Positioning control

1.1.1 Features of QD77MS

The QD77MS has the following features.

(1) High-speed starting time

High-speed starting time "0.88ms" (QD77MS4 use) during positioning control is achieved.

(2) Wide variety of positioning control functions

The main functions (such as HPR control, positioning control and manual control) which are required for any positioning system and the sub functions which limit and add functions to those controls are supported.

(a) Enhanced HPR control

1) Additional features of HPR control
Six machine HPR methods are provided: one proximity dog method, two count methods, one data set method, one scale origin signal detection method and one driver HPR method. Select an applicable method according to the system.

2) HPR retry function
The HPR retry function is provided so that the machine HPR control can be performed from any position, regardless of the machine stop position when the system is powered on.

(b) Wide variety of control methods
Positioning controls, such as position control, speed control, speed-position switching control, position-speed switching control, and other controls, are provided.

1) Independent control of each axis
Controls, such as position control and speed control, can be performed independently for each axis at any given timing.

2) Interpolation control
Interpolation controls using multiple axes can be performed.
(2- to 4-axis linear interpolation control, 2-axis circular interpolation control, 2- to 4-axis speed control, etc.)

3) Speed-torque control
Speed control and torque control not including the position loop can be performed.

(c) Large amount of data
Up to 600 positioning data (combinations of data, such as control method, positioning address, and command speed) per axis can be set.

(d) Continuous processing of multiple positioning data
Multiple positioning data can be processed continuously within one positioning operation.
Continuous positioning control can be executed over multiple blocks, where each block consists of multiple positioning data.
This reduces the number of executions of positioning, management of execution status, and others.

(e) Acceleration/deceleration processing
Two acceleration/deceleration processing methods are provided: trapezoidal acceleration/deceleration and S-curve acceleration/deceleration.
The acceleration/deceleration curve can be selected according to the machine characteristic.

(3) Synchronous control

The synchronous control and electronic cam control can be performed.

(4) Mark detection function

The mark detection to latch any data by the external command signal [DI1 to DI4] can be performed.

(5) High maintainability

Maintainability is enhanced in the QD77MS.

(a) Data retention without battery
Data such as the positioning data and parameters can be stored in the flash ROM inside the QD77MS. This feature allows the module retain the data without a battery.

(b) Module error collection function
The QD77MS notifies error details to the PLC CPU when an error occurs.
Storing the error information in the PLC CPU allows the user to check the error from the programming tool even after the module is powered off or reset.

(6) Support of intelligent function module dedicated instructions

Dedicated instructions such as the positioning start instruction (Axis 1 to Axis 4) and teaching instruction (Axis 1 to Axis 4) are provided.
The use of such dedicated instructions simplifies programs.
The dedicated instructions are fully compatible with the LD77MH/QD75MH.

(7) Setting, monitoring, and testing through GX Works2

Parameters and positioning data for the QD77MS can be set using GX Works2 (Simple Motion Module Setting).

Moreover, using the test function of GX Works2 (Simple Motion Module Setting), users can check the wiring status and the validity of the preset parameters and positioning data by performing test operation before creating a program for positioning control.

The control monitor function of GX Works2 allows user to debug programs efficiently.

The servo parameters can be set easily by using the GX Works2 in combination with the MR Configurator2.

(8) Compatibility with the LD77MH/QD75MH

The proven programs in LD77MH/QD75MH can be used because the QD77MS is compatible with the LD77MH/QD75MH.

(9) Forced stop function

The batch forced stop is available for all axes of servo amplifier by the forced stop signal.

"Valid/Invalid" of the forced stop input signal can be selected by the parameters.

(10) Connection between the QD77MS and servo amplifier with high speed synchronous network by SSCNETⅢ(/H)

The QD77MS can be directly connected to the MR-J5-B/MR-J4-B/MR-J3-B series of Mitsubishi servo amplifiers using the SSCNETⅢ(/H). Also, it can be directly connected to the Mitsubishi servo amplifiers of MR-JE-B(F) series using the SSCNETⅢ/H.

(a) Because the high speed synchronous network by SSCNETⅢ(/H) is used to connect the QD77MS and the servo amplifier, or servo amplifiers, saving wiring can be realized. The maximum distance between the QD77MS and servo amplifier, servo amplifier and servo amplifier of the SSCNETⅢ cable on the same bus was set to 50(164.04) [m(ft.)] (SSCNETⅢ)/100(328.08) [m(ft.)] (SSCNETⅢ/H), and the flexibility will improve at the system design.

(b) By the use of SSCNETⅢ cable (Optical communication), influence of electromagnetic noise and others from servo amplifier, etc. are reduced.

(c) The servo parameters can be set on the QD77MS side to write or read them to/from the servo amplifier using the SSCNET communication.

(d) The actual position value and error description contained in the servo can be checked by the buffer memory of the QD77MS.

(e) The communication between the MR Configurator2 and servo amplifiers is possible via the PLC CPU.

(11) Easy application to the absolute position system

(a) The MR-J5-B/MR-J4-B/MR-J3-B series servo amplifiers and servo motors support the absolute position system as standard. They can be used as an absolute position system simply by attaching the battery for absolute position system to the servo amplifier. It can be realized only at connecting the battery for absolute position system to the servo amplifier.

(b) Once the HP have been established, the HPR operation is unnecessary at the system's power supply ON.

(c) With the absolute position system, the data set method HPR is used to establish the HP. The wiring of proximity dog, etc. is unnecessary.

(d) When the setting unit is "degree", the absolute position system with unlimited length feed can be configured.

1.1.2 Purpose and applications of positioning control

"Positioning" refers to moving a moving body, such as a workpiece or tool (hereinafter, generically called "workpiece") at a designated speed, and accurately stopping it at the target position. The main application examples are shown below.

■ Punch press (X, Y feed positioning)

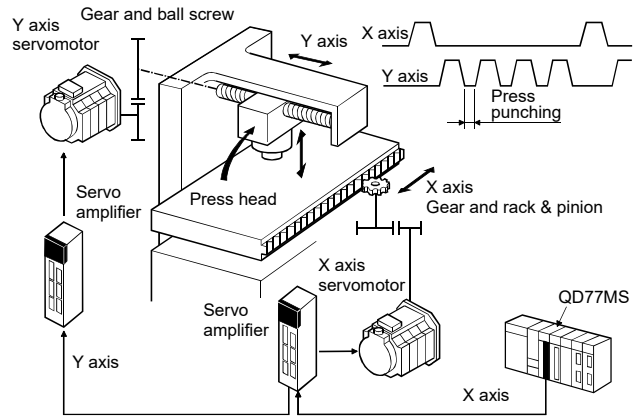

- To punch insulation material or leather, etc., as the same shape at a high yield, positioning is carried out with the X axis and Y axis servos.
- After positioning the table with the X axis servo, the press head is positioned with the Y axis servo, and is then punched with the press.
- When the material type or shape changes, the press head die is changed, and the positioning pattern is changed.

■ Palletizer

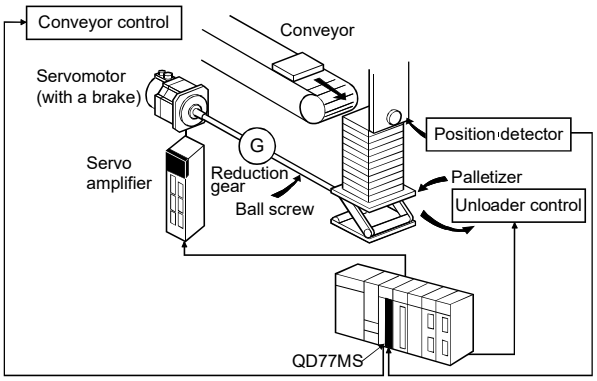

- Using the servo for one axis, the palletizer is positioned at a high accuracy.
- The amount to lower the palletizer according to the material thickness is saved.

■ Compact machining center (ATC magazine positioning)

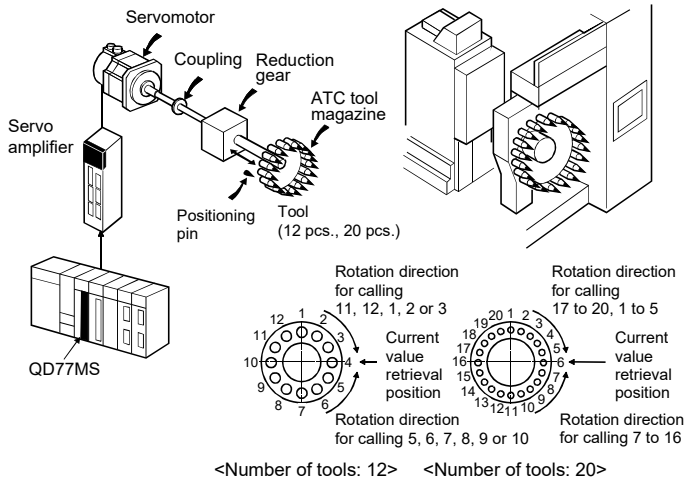

- The ATC tool magazine for a compact machining center is positioned.
- The relation of the magazine's current value and target value is calculated, and positioning is carried out with forward run or reverse run to achieve the shortest access time.

■ Lifter

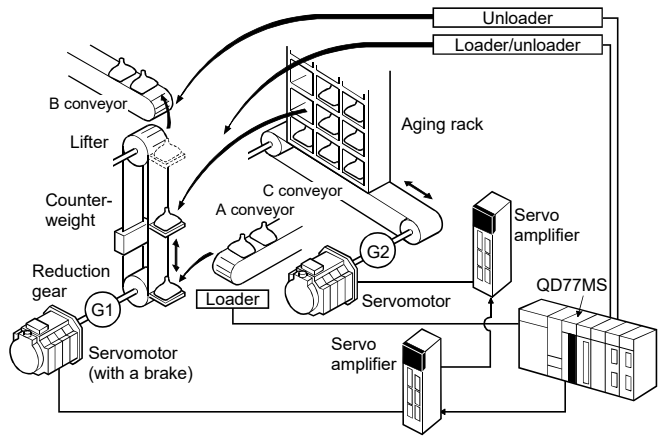

- During the aging process, storage onto the rack is carried out by positioning with the AC servo.
- The up/down positioning of the lifter is carried out with the 1-axis servo, and the horizontal position of the aging rack is positioned with the 2-axis servo.

■ Index table (High-accuracy indexing of angle)

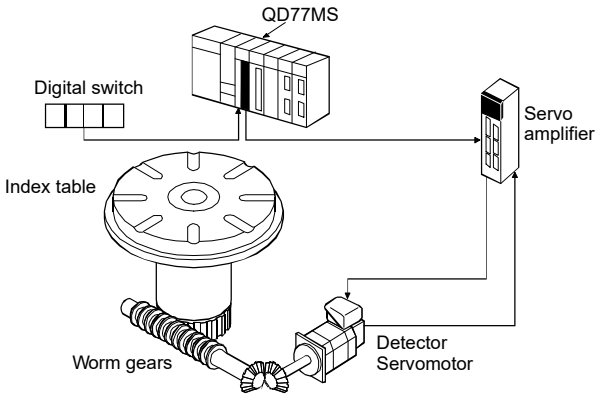

- The index table is positioned at a high accuracy using the 1-axis servo.

■ Inner surface grinder

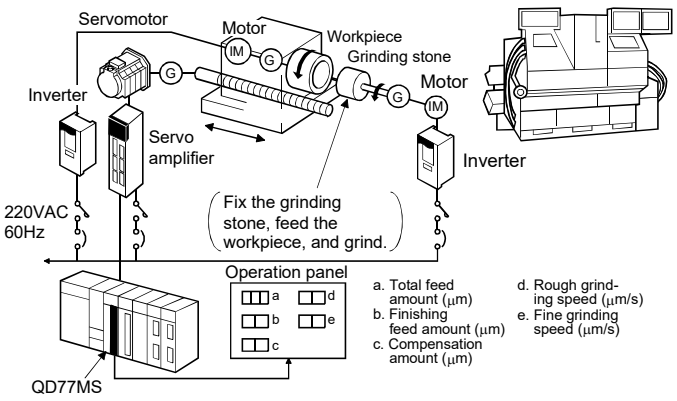

- The grinding of the workpiece's inner surface is controlled with the servo and inverter.
- The rotation of the workpiece is controlled with the 1-axis inverter, and the rotation of the grinding stone is controlled with the 2-axis inverter. The workpiece is fed and ground with the 3-axis servo.

1.1.3 Mechanism of positioning control

In the positioning system using the Simple Motion module, various software and devices are used for the following roles.
The Simple Motion module realizes complicated positioning control when it reads in various signals, parameters and data and is controlled with the PLC CPU.

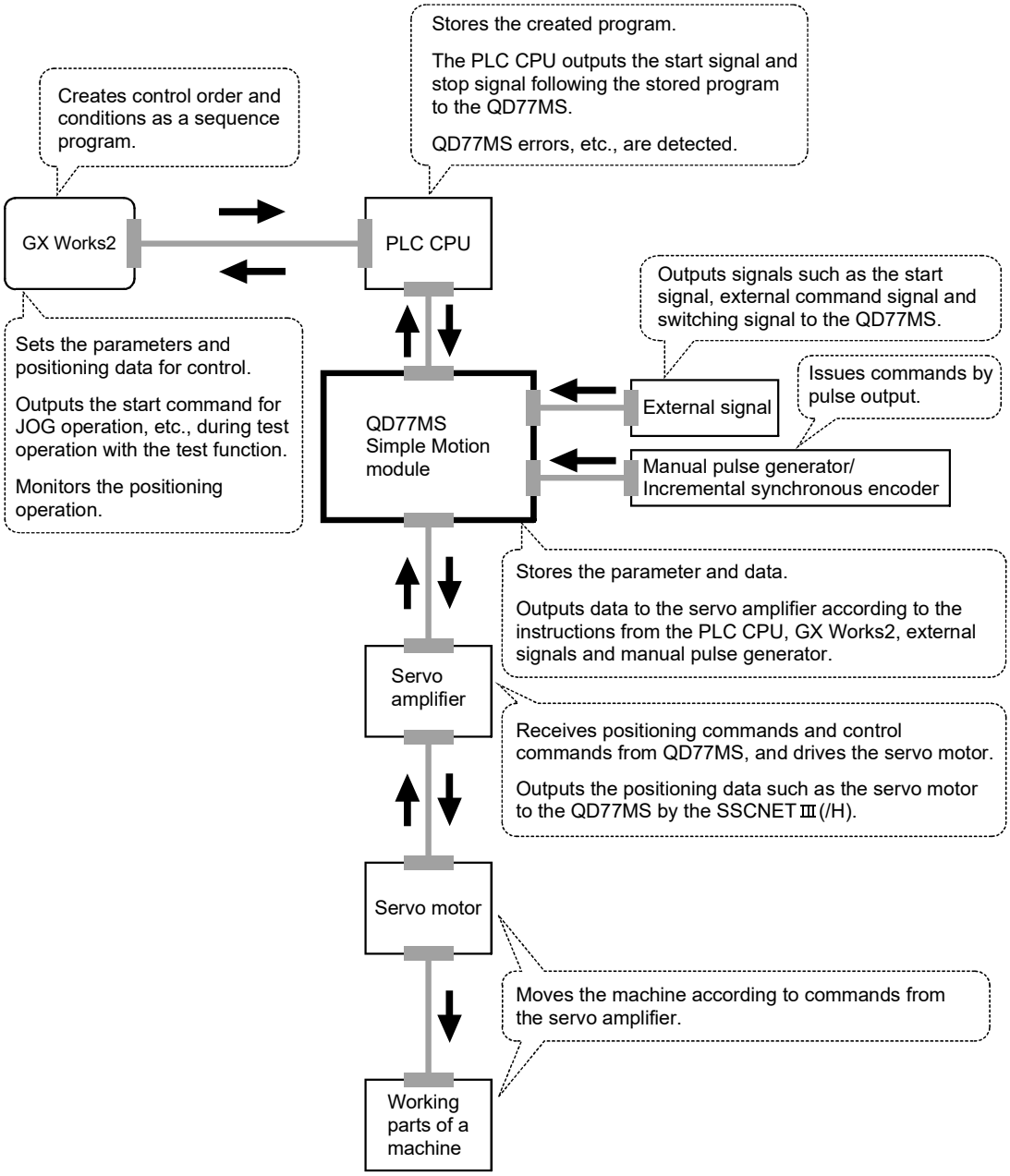

1.1.4 Overview of positioning control functions

The outline of the "overview of positioning control", "overview of independent positioning control and continuous positioning control", "overview of block positioning control" and "overview of acceleration/deceleration processing control" is shown below.

■ Positioning control

An overview of positioning using positioning data is described below.

(1) Linear control

(a) 1-axis linear control

This performs positioning from the start point address (location the axis is presently stopped) defined on the specified axis to the specified position.

[Control using the absolute system]

1) This performs positioning from the start point address to the specified position.
2) The start point address and the specified address determine the movement direction.

[Example]

The following figure shows the operations when the start point address is 5000 and the positioning addresses are 2000 and 8000:

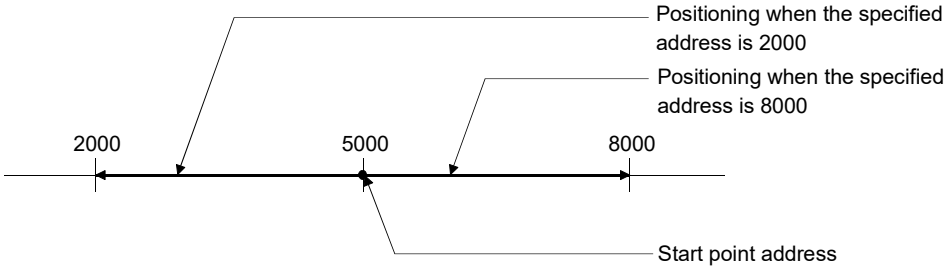

[Control using the increment system]

1) This performs positioning from the specified increment of travel from the start point address.
2) The sign of the travel increment determines the direction of travel.
   • For positive travel increment…….Positioning in the positive direction (direction of address increase)
   • For negative travel increment…...Positioning in the negative direction (direction of address decrease)

[Example]

The following figure shows the operations when the start point address is 5000 and the travel increments are 3000 and -3000:

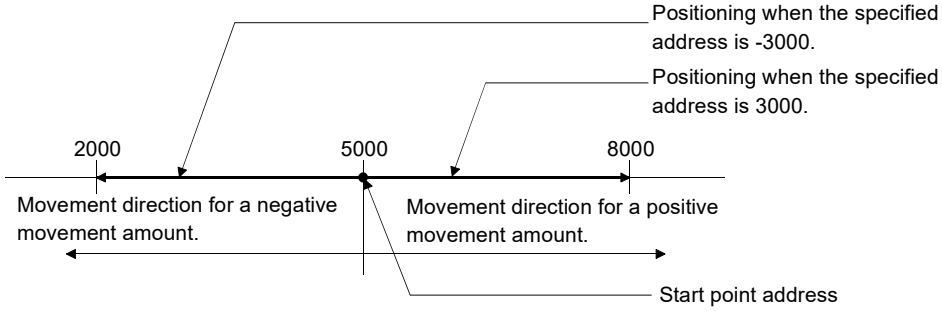

(b) 2-axis linear interpolation control (Note-1)

This controls interpolation along a linear locus from the start point address (current stop position) defined by two axes.

[Control using the absolute system]

1) This performs linear interpolation using two axes from the start point address to the specified address.
2) The start point address and the specified address determine the direction of travel.

[Example]

The operation when the start point address is 800 for axis 1 and 2000 for axis 2 and the positioning address specified to 2000 for axis 1 and 8000 for axis 2, is shown below.

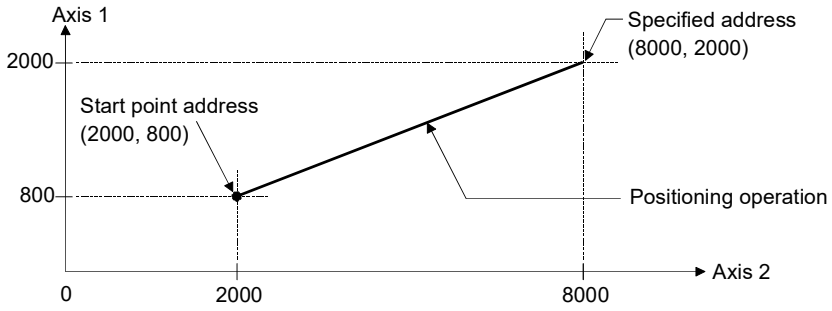

[Control using the increment system]

1) This performs positioning to the composite position of the travel direction and the travel increment specified by each axis from the start point address.
2) The sign of the travel increment determines the direction of travel.
   • For positive travel increment……Positioning in the positive direction (direction of address increase)
   • For negative travel increment……Positioning in the negative direction (direction of address decrease)

[Example]

The operation when the start point address is 800 for axis 1 and 2000 for axis 2 and the positioning address specified to 1200 for axis 1 and 6000 for axis 2, is shown below.

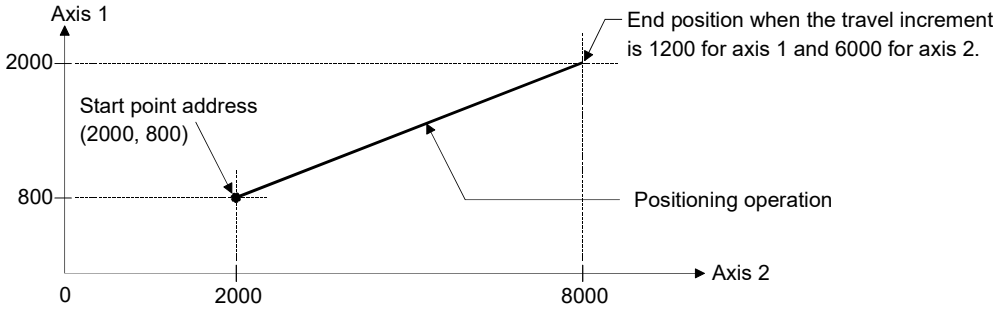

REMARK

(Note-1): The interpolation speed during linear interpolation control can be selected from "composite speed" and "reference axis speed" using the interpolation speed designation method of detailed parameter 1. (Refer to Section 5.2.3 information about setting "[Pr.20] Interpolation speed designation method" of the detailed parameter 1.)

(2) Circular interpolation control (Note-1)

There are two types of circular interpolation controls: circular interpolation with a specified sub point and circular interpolation with the specified center point.

(a) Circular interpolation with a specified sub point

Circular interpolation is performed using the specified endpoint address and sub point (passing point) address.

Two methods are available: absolute system and increment system.

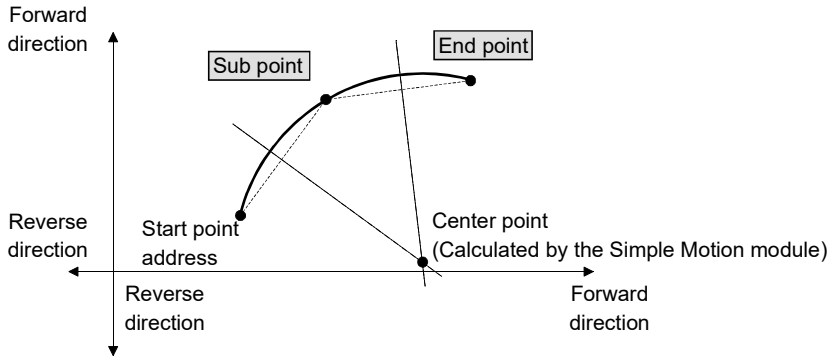

(b) Circular interpolation with the specified center point

Circular interpolation is performed using the specified endpoint address and center point address.

Two methods are available: absolute system and increment system.

Also, the direction of movement can be selected from clockwise or counterclockwise.

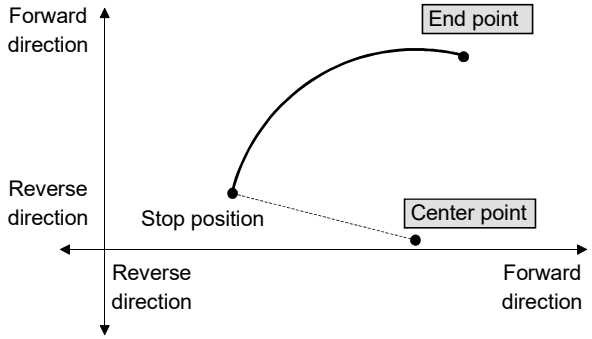

REMARK

(Note-1): The interpolation speed during circular interpolation control may only be set to "composite speed" for the interpolation speed designation method of detailed parameter 1. (Refer to Section 5.2.3 information about setting "[Pr.20] Interpolation speed designation method" of the detailed parameter 1.)

(3) Fixed-feed control

This performs positioning for the specified increment of travel.

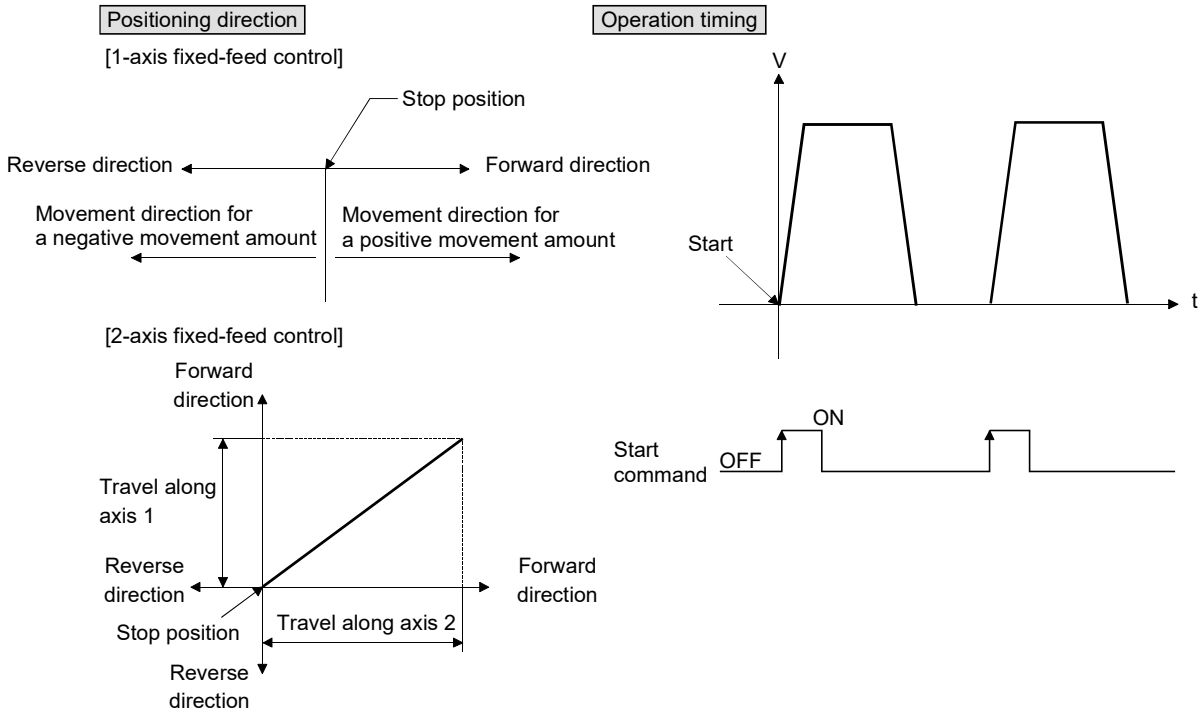

(4) Speed control

After command is executed, control continues with the command speed until the stop command is input.

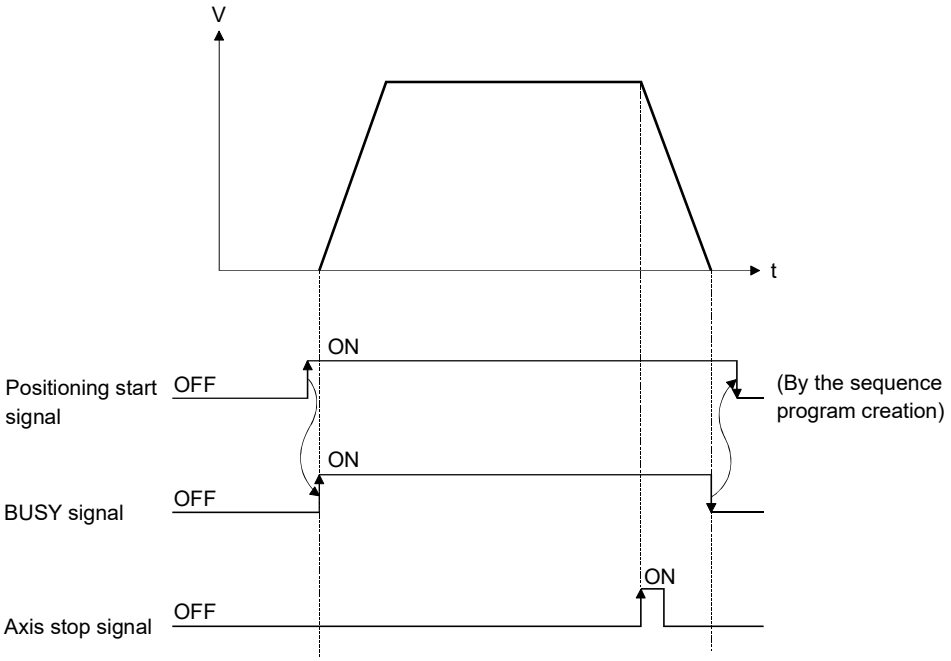

(5) Speed-position switching control

This starts positioning under speed control, and switches to position control according to the input of the Simple Motion module speed-position switching signal and perform positioning for the specified increment of travel.

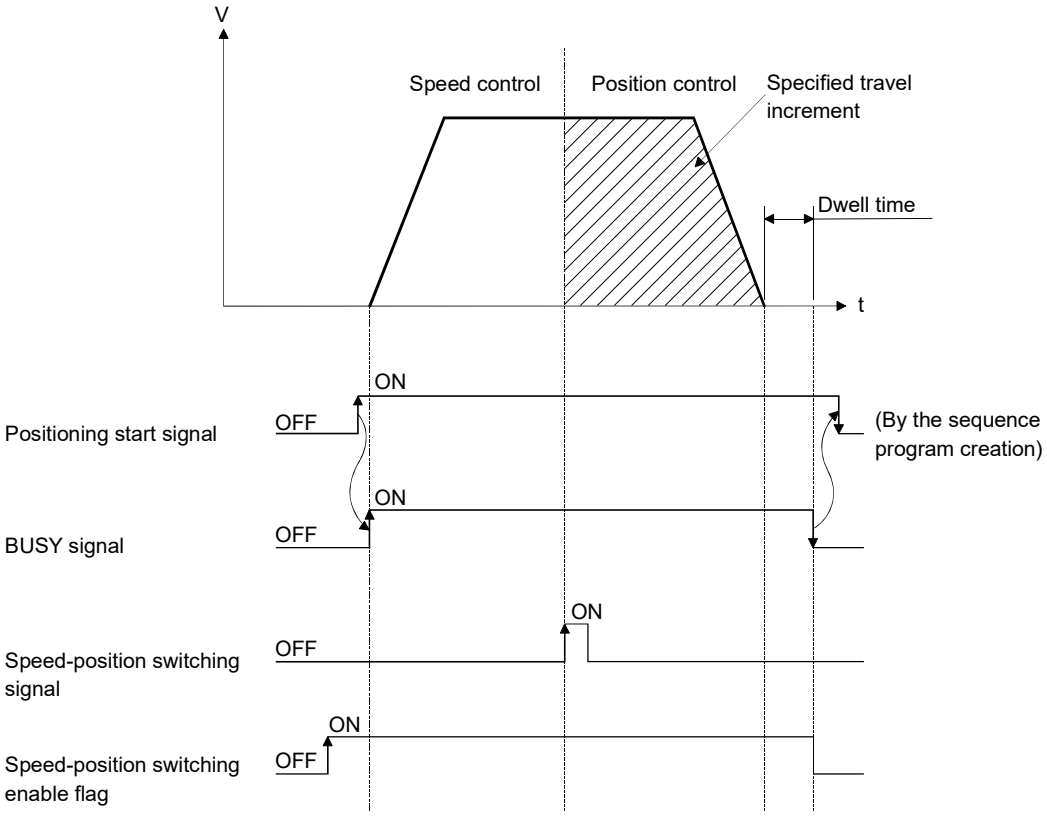

■ Independent positioning control and continuous positioning control

The Simple Motion module performs positioning according to the user-set positioning data, which is a set of information comprised of the control method (position control, speed control, speed-position switching control), positioning address, operation pattern, and so on.

Up to 600 of positioning data are assigned respectively to positioning data Nos. 1 to 600 per axis and registered to the Simple Motion module.

The operation pattern set in each positioning data by the user determines whether to perform positioning operation with one positioning data item or to perform continuous positioning operation with multiple positioning data items.

(1) Independent positioning control (operation pattern = 00: positioning complete)

The operation completed upon completion of positioning for the specified positioning data. The positioning completion of this operation pattern is also used as the operation pattern for the last positioning data of continuous positioning and continuous path positioning.

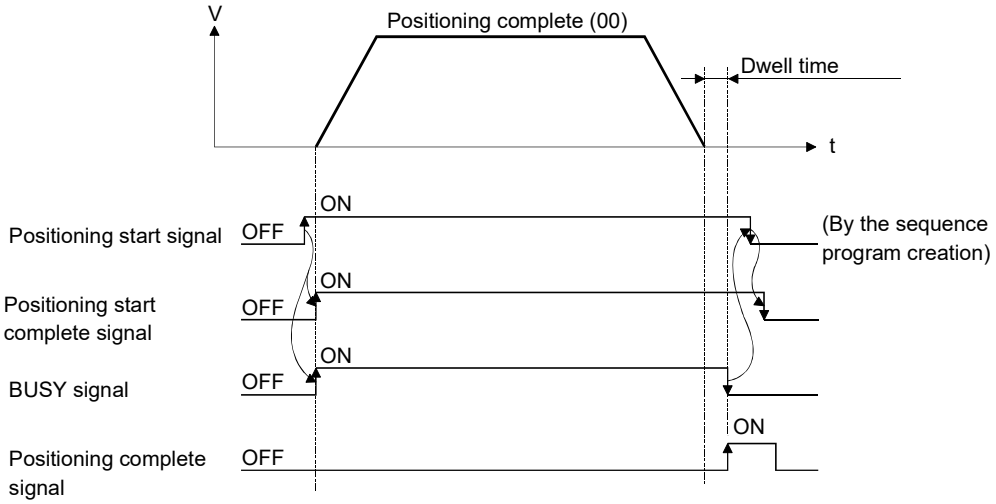

(2) Continuous positioning control (operation pattern = 01: positioning continue)

The operation stops temporarily upon the completion of positioning for the specified positioning data, and then continues with the next positioning data number.

This is specified when performing positioning in which the direction changes because of multiple positioning data items having consecutive positioning data numbers.

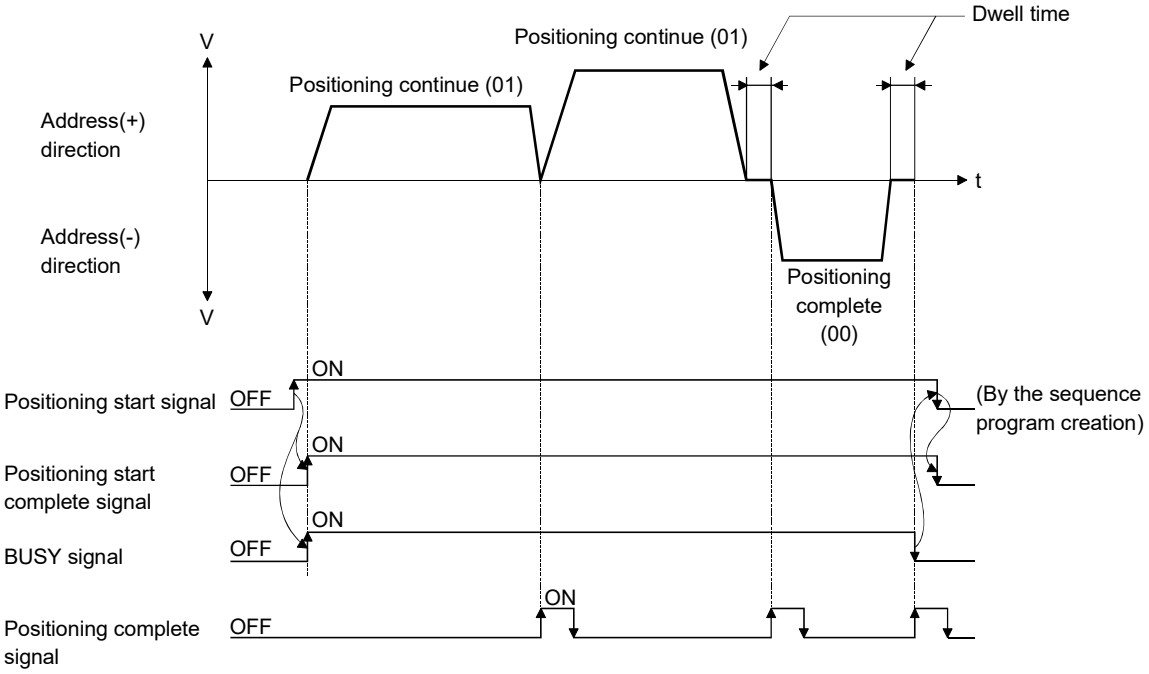

(3) Continuous path control (operation pattern = 11: positioning continue)

After executing positioning using the specified positioning data, the operation changes its speed to that of the next positioning data number and continues positioning.

This is specified when continuously executing multiple positioning data items having consecutive positioning data numbers at a specified speed.

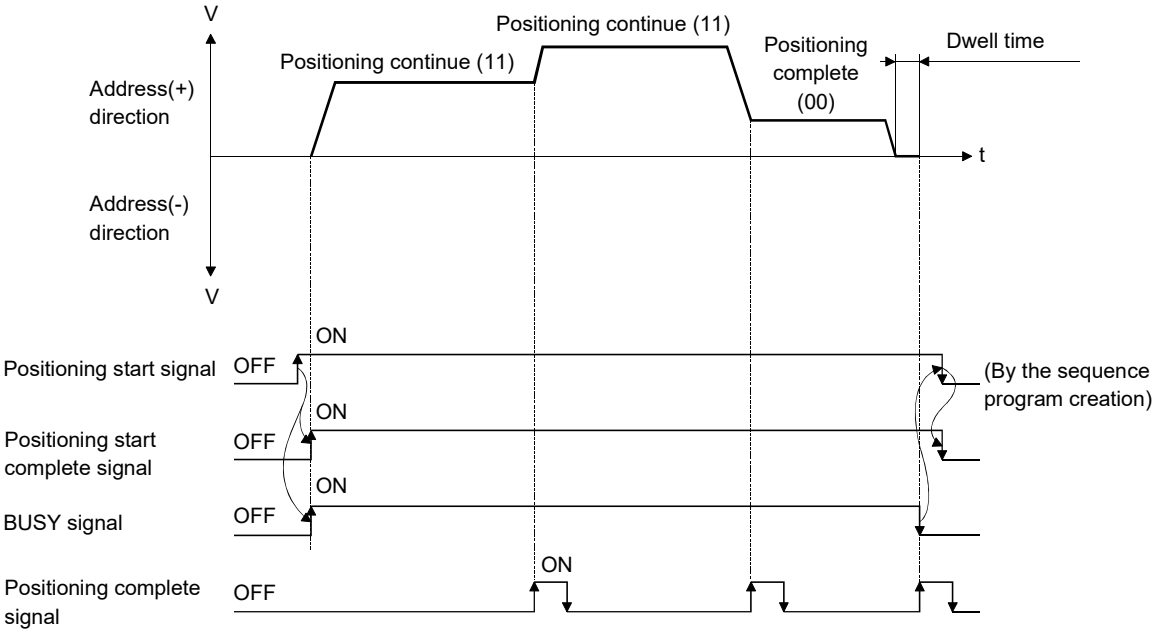

■ Block positioning control

Block positioning is a control that continuously executes the positioning of specified blocks. One block equivalent to a series of positioning data up to the completion of positioning (operation pattern = 00) by Independent or continuous positioning control.
A maximum of 50 blocks per axis can be specified.
Using a one-time start command from the PLC CPU or external, complex positioning control can be performed.
The block positioning control can be performed by specifying the positioning start number and positioning start information in the buffer memory.

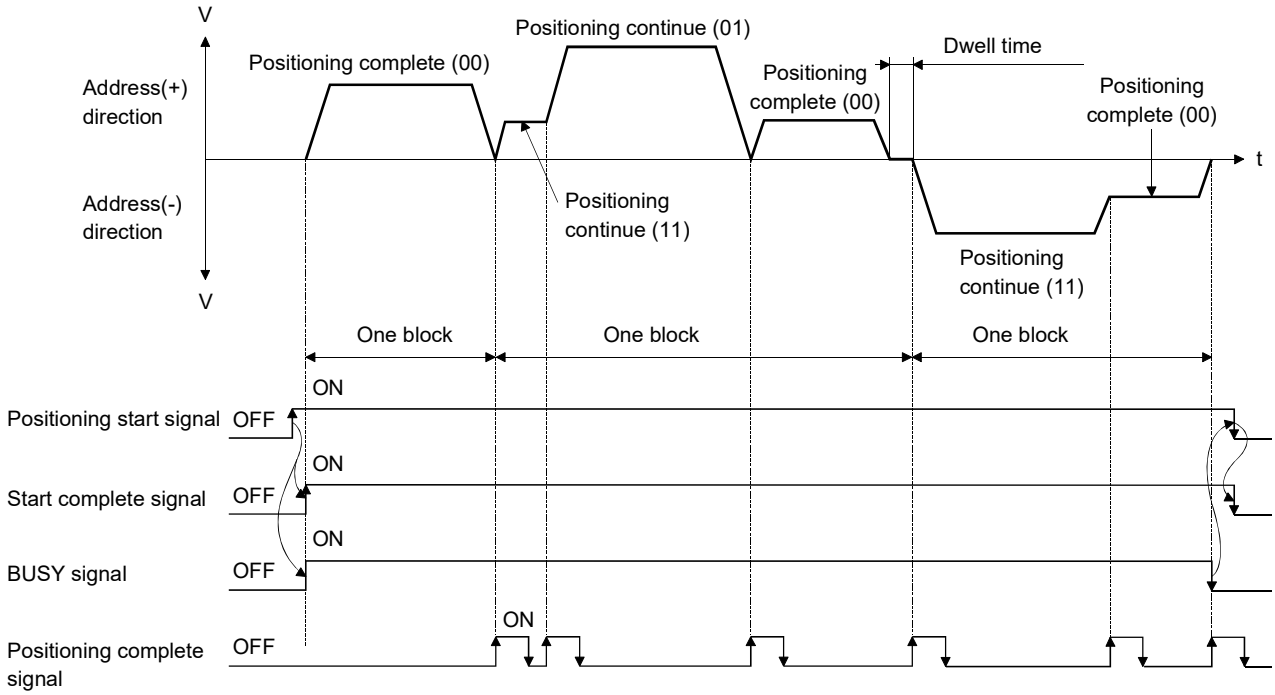

■ Overview of acceleration/deceleration processing control

Acceleration/deceleration processing for the positioning processing, manual pulse-generator processing, HPR processing and JOG processing is performed using the user-specified method, acceleration time and deceleration time.

(1) Acceleration/deceleration method

There are two types of acceleration and deceleration processing: the trapezoidal acceleration/deceleration processing method and S-curve acceleration/deceleration processing method. A detailed parameter is used to set which method is used. The specified acceleration/deceleration method is applied to all accelerations and decelerations when starting and completing positioning processing, HPR processing and JOG processing, as well as when changing the speed.

(a) Trapezoidal acceleration/deceleration processing method

This is a method in which linear acceleration/deceleration is carried out based on the acceleration time, deceleration time, and speed limit value set by the user.

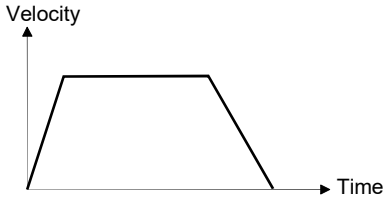

(b) S-curve acceleration/deceleration processing method

This method reduces the load on the motor when starting and stopping. This is a method in which acceleration/deceleration is carried out gradually, based on the acceleration time, deceleration time, speed limit value, and S-curve ratio (1 to 100%) set by the user.

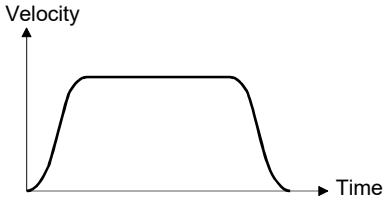

(2) Acceleration time, deceleration time, rapid-stop deceleration time

(a) Four types each of the acceleration time and deceleration time for positioning control can be set using basic parameters 2 and detailed parameters 2.

- Acceleration time…….The time elapses before the speed of 0 reaches the limit value.
- Deceleration time…….The time elapses before the speed at the limit value reaches 0.

(b) The rapid-stop deceleration time (1 to 8388608 ms) is set using the detailed parameters 2.

1.1.5 Outline design of positioning system

The outline of the positioning system operation and design using the Simple Motion module is shown below.

(1) Positioning system using Simple Motion module

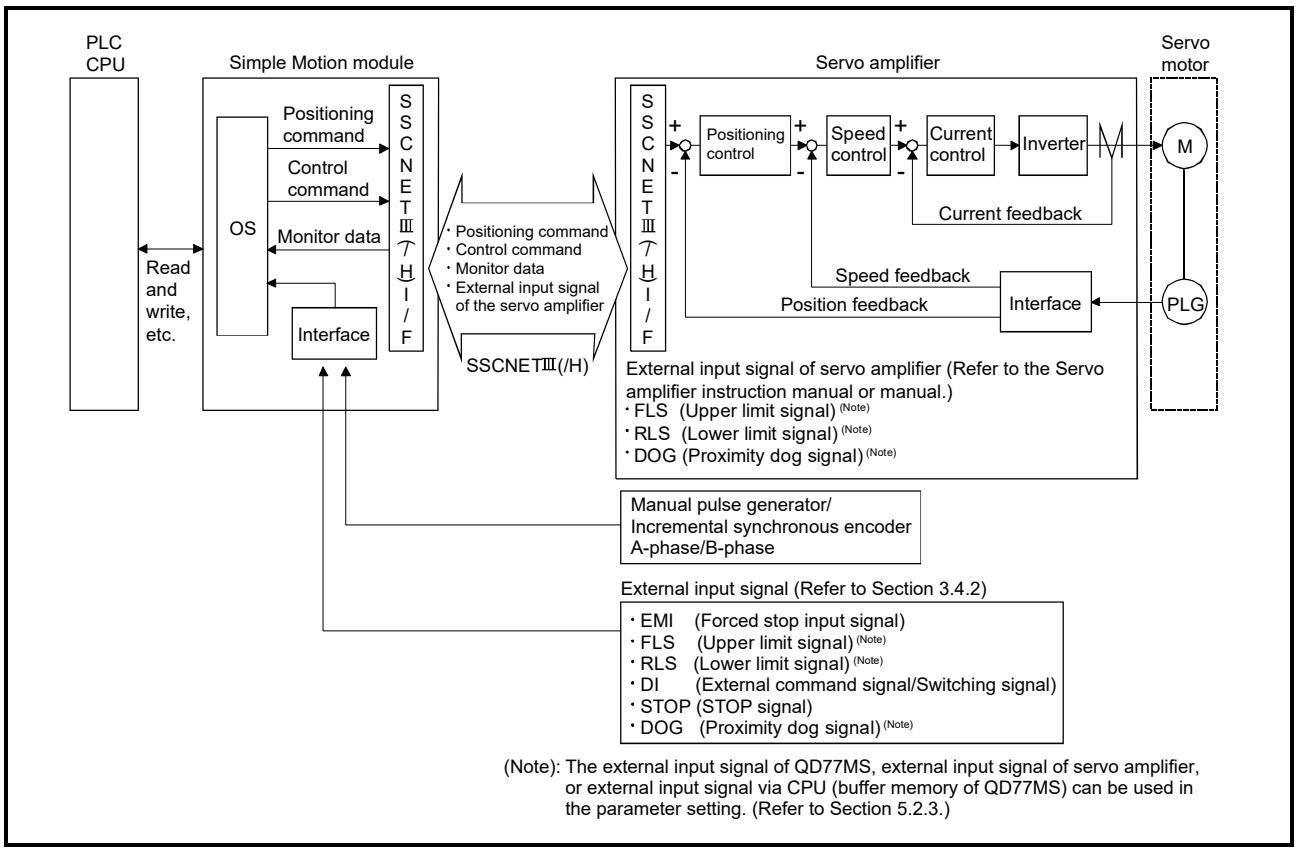

Fig. 1.1 Outline of the operation of positioning system using Simple Motion module

1.1.6 Communicating signals between QD77MS and each module

The outline of the signal communication between the Simple Motion module and PLC CPU, GX Works2 and servo amplifier, etc., is shown below.
(GX Works2 communicates with the Simple Motion module via the PLC CPU to which it is connected.)

(1) QD77MS2/QD77MS4

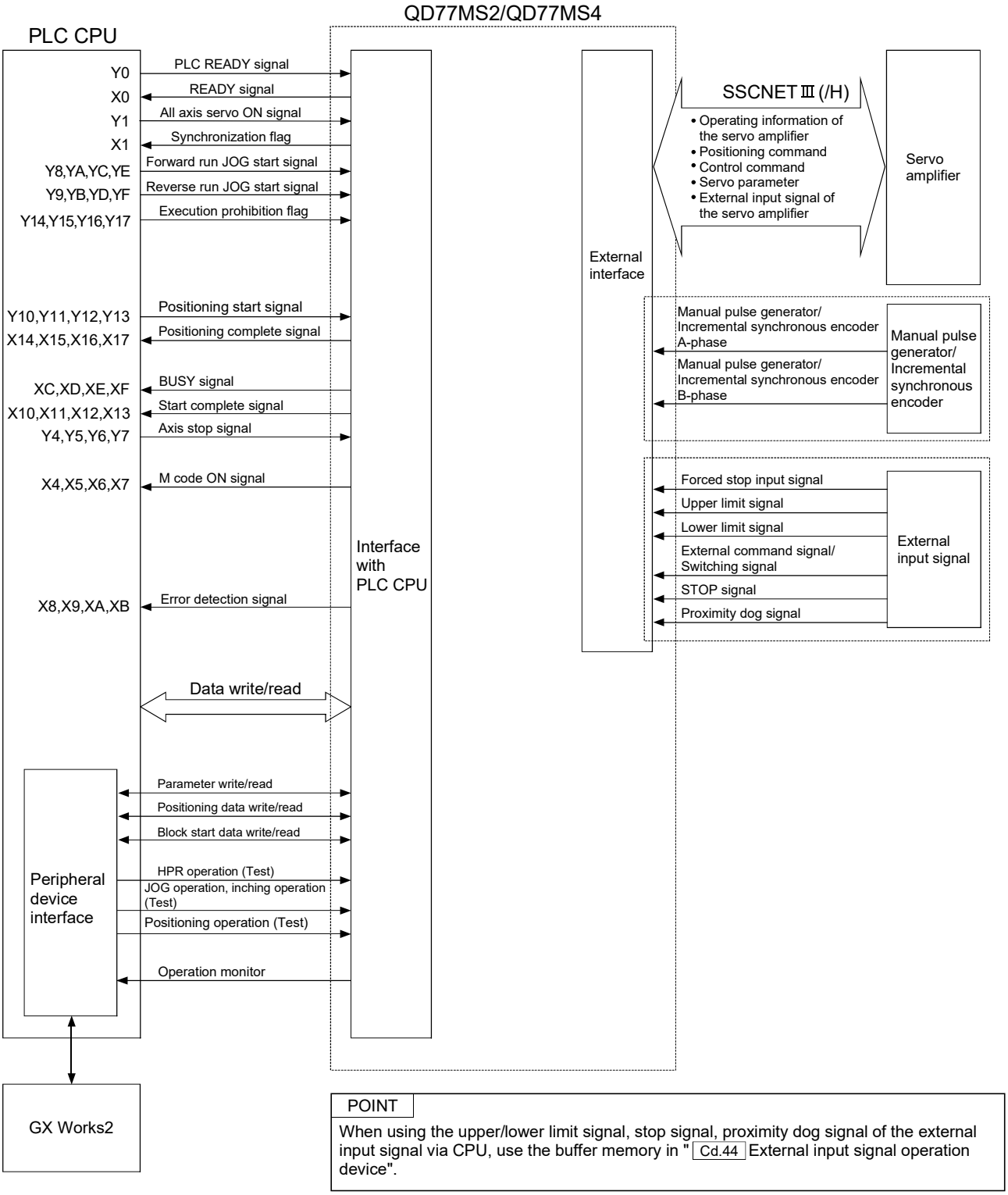

POINT

When using the upper/lower limit signal, stop signal, proximity dog signal of the external input signal via CPU, use the buffer memory in " Cd.44 External input signal operation device".

(2) QD77MS16

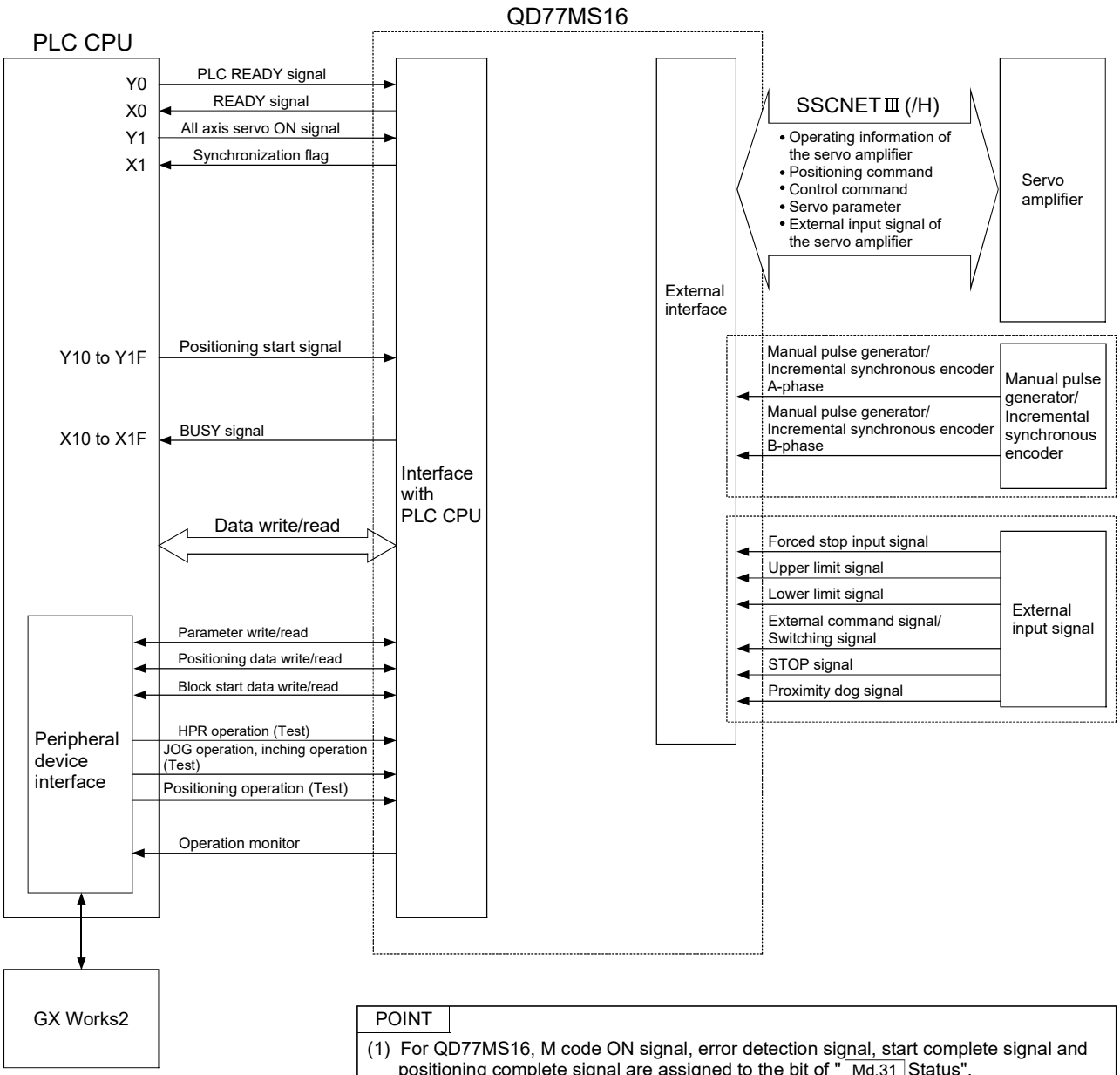

POINT

(1) For QD77MS16, M code ON signal, error detection signal, start complete signal and positioning complete signal are assigned to the bit of " Md.31 Status".
(2) For QD77MS16, axis stop signal, forward run JOG start signal, reverse run JOG start signal, execution prohibition flag are assigned to the buffer memory Cd.180 to Cd.183 .
(3) When using the upper/lower limit signal, stop signal, proximity dog signal of the external input signal via CPU, use the buffer memory in " Cd.44 External input signal operation device".

■ Simple Motion module ↔ PLC CPU

The Simple Motion module and PLC CPU communicate the following data.

Direction / Communication	Simple Motion module → PLC CPU	PLC CPU → Simple Motion module
Control signal ＊	Signal indicating Simple Motion module state • READY signal • BUSY signal etc.	Signal related to commands • PLC READY signal • All axis servo ON signal • Positioning start signal etc.
Data (read/write)	• Parameter • Positioning data • Block start data • Control data • Monitor data	• Parameter • Positioning data • Block start data • Control data

＊ Refer to Section 3.3 "Specifications of input/output signals with PLC CPU" for details.

■ Simple Motion module ↔ GX Works2

The Simple Motion module and GX Works2 communicate the following data via the PLC CPU.

Direction / Communication	Simple Motion module → GX Works2	GX Works2 → Simple Motion module
Data (read/write)	• Parameter • Positioning data	• Parameter • Positioning data
Test operation	–	• HPR control start command • Positioning control start command • JOG/Inching operation start command • Teaching start command • Manual pulse generator operation enable/disable command
Operation monitor	• Monitor data	–

■ Simple Motion module ↔ Servo amplifier

The Simple Motion module and servo amplifier communicate the following data via the SSCNETⅢ(/H).

Direction / Communication	Simple Motion module → Servo amplifier	Servo amplifier → Simple Motion module
SSCNETⅢ/H	• Positioning commands • Control commands • Servo parameter	• Operating information of the servo amplifier • Servo parameter • External input signal of the servo amplifier
SSCNETⅢ		

■ Simple Motion module ↔ Manual pulse generator/Incremental synchronous encoder

The Simple Motion module and manual pulse generator/incremental synchronous encoder communicate the following data via the external input connection connector.

Direction / Communication	Simple Motion module → Manual pulse generator/Incremental synchronous encoder	Manual pulse generator/Incremental synchronous encoder → Simple Motion module
Pulse signal	–	• Manual pulse generator/Incremental synchronous encoder A-phase • Manual pulse generator/Incremental synchronous encoder B-phase

■ Simple Motion module ↔ External signal

The Simple Motion module and external signal communicate the following data via the external input connection connector.

Direction / Communication	Simple Motion module → External signal	External signal → Simple Motion module
Control signal	–	• Forced stop input signal • External command signal/switching signal • Upper limit signal • Lower limit signal • Stop signal • Proximity dog signal

1.2 Flow of system operation

1.2.1 Flow of all processes

The positioning control processes, using the Simple Motion module, are shown below.

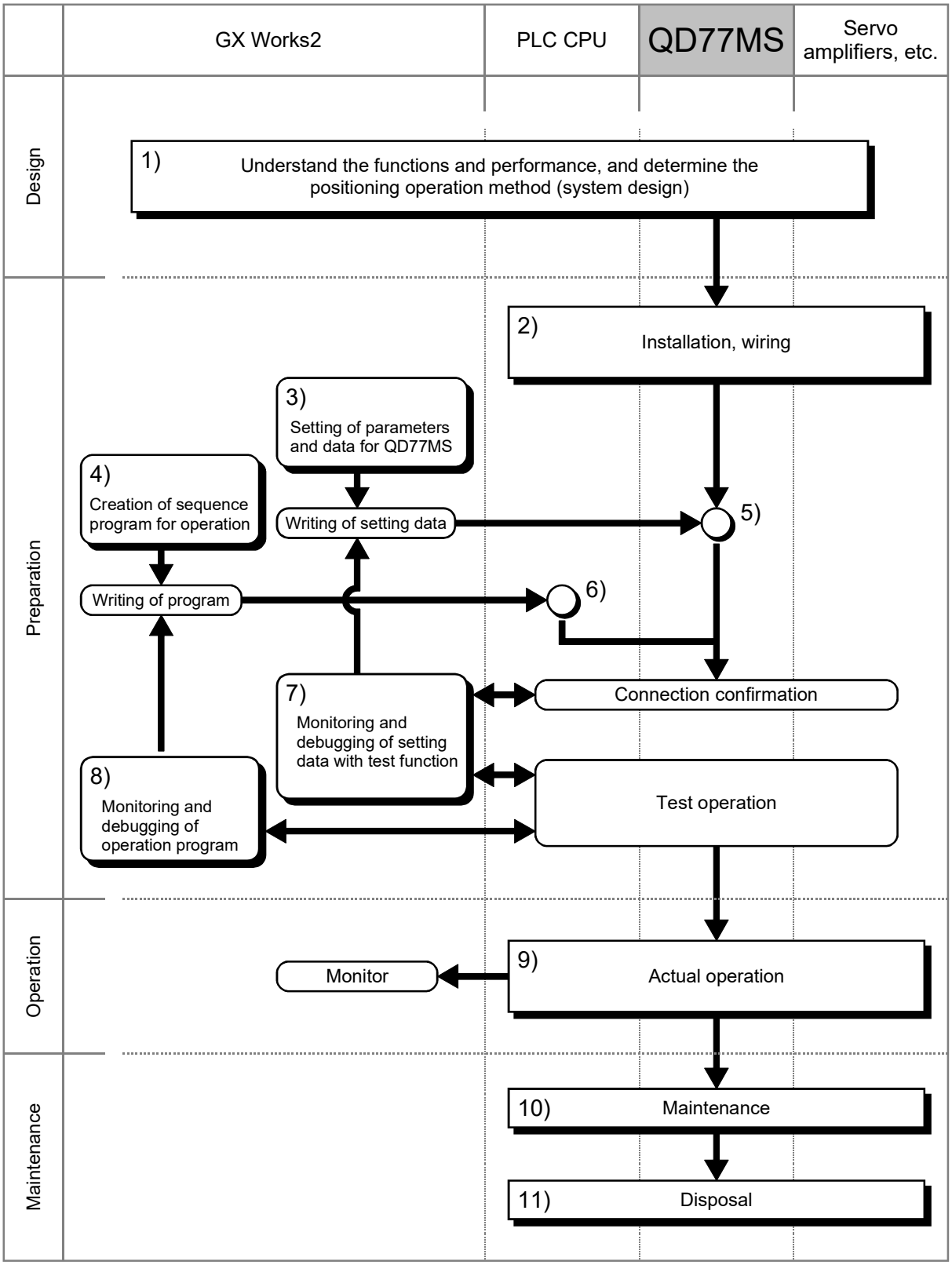

The following work is carried out with the processes shown on the previous page.

	Details	Reference
1)	Understand the product functions and usage methods, the configuration devices and specifications required for positioning control, and design the system.	• Chapter 1 • Chapter 2 • Chapter 3 • Chapter 8 to Chapter 14
2)	Install the Simple Motion module onto the base unit, wire the Simple Motion module and external connected devices (servo amplifier, etc.) and wire the PLC CPU and peripheral devices.	• Chapter 4
3)	Using GX Works2, set the servo parameters, parameter, positioning data, block start data and condition data required for the positioning control to be executed.	• Chapter 5 • Chapter 8 to Chapter 14 • Help in "Simple Motion Module Setting Tool"
4)	Using GX Works2, create the sequence program required for positioning operation.	• Chapter 6 • GX Works2 Version1 Operating Manual (Common)
5)	Write the parameters and positioning data, etc., created with GX Works2 into the Simple Motion module.	• Chapter 7 • Help in "Simple Motion Module Setting Tool"
6)	Using GX Works2, write the created sequence program into the PLC CPU.	• Chapter 7 • GX Works2 Version1 Operating Manual (Common)
7)	Carry out test operation and adjustments in the test function of GX Works2 to check the connection with the Simple Motion module and external connected device, and to confirm that the designated positioning operation is executed correctly. (Debug the set "parameters" and "positioning data", etc.)	• Chapter 14 • Help in "Simple Motion Module Setting Tool"
8)	Carry out test operation and adjustment to confirm that the designated positioning operation is executed correctly. (Debug the created sequence program.)	• GX Works2 Version1 Operating Manual (Common)
9)	Actually operate the positioning operation. At this time, monitor the operation state as required. If an error or warning occurs, remedy.	• Chapter 5 • Chapter 16 • Help in "Simple Motion Module Setting Tool" • GX Works2 Version1 Operating Manual (Common)
10)	Maintenance of the Simple Motion module as required.	• Chapter 4
11)	Dispose of the Simple Motion module.	• Chapter 4

1.2.2 Outline of starting

The outline for starting each control is shown with the following flowchart.
(It is assumed that each module is installed, and the required system configuration, etc., has been prepared.)

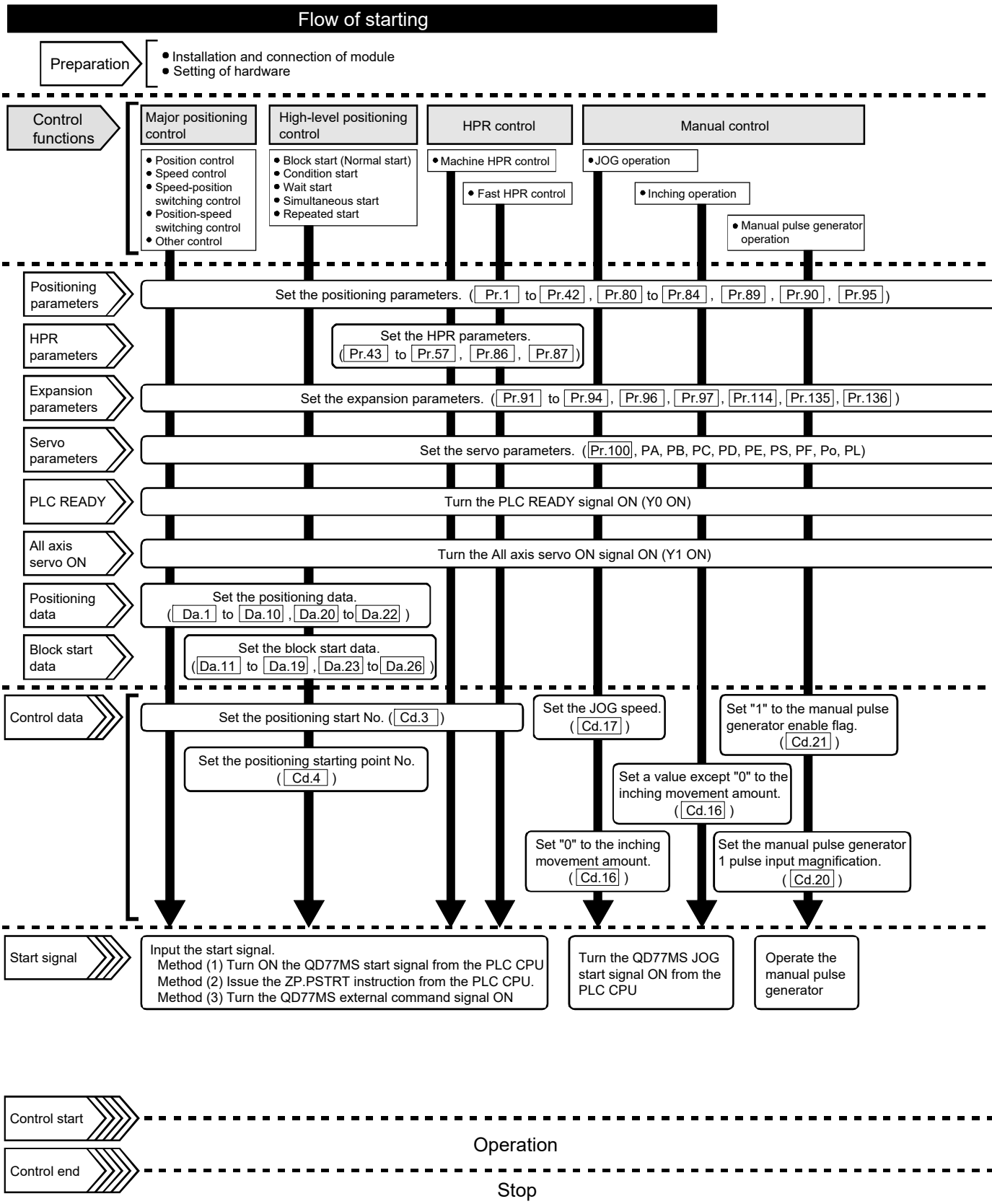

Setting method

: Indicates the sequence program that must be created.

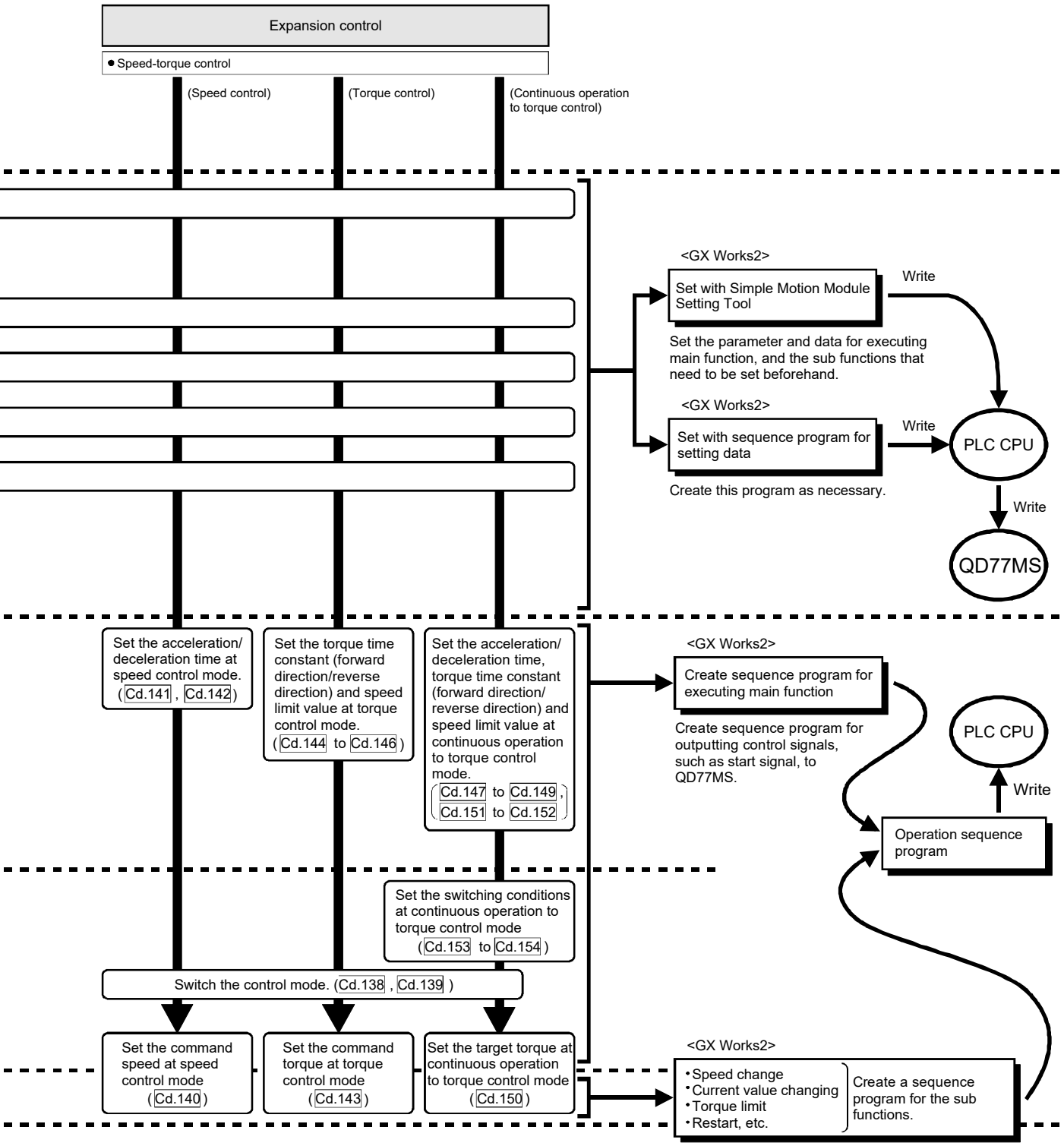

1.2.3 Outline of stopping

Each control is stopped in the following cases.

(1) When each control is completed normally
(2) When the servo READY signal is turned OFF
(3) When a PLC CPU error occurs
(4) When the PLC READY signal is turned OFF
(5) When an error occurs in the Simple Motion module
(6) When control is intentionally stopped
(Stop signal from PLC CPU turned ON, "Stop signal" of external input signal turned ON, etc.)

The outline for the stop process in above cases is shown below. (Excluding "(1) When each control is completed normally" above.)
Refer to Section 12.1 "Speed-torque control" for the stop process during the speed control mode, torque control mode and continuous operation to torque control mode.

<table>
<tr><th colspan="2" rowspan="3">Stop cause</th><th rowspan="3">Stop axis</th><th rowspan="3">M code ON signal after stop</th><th rowspan="3">Axis operation status after stopping ([Md.26])</th><th colspan="6">Stop process</th></tr>
<tr><th colspan="2">HPR control</th><th rowspan="2">Major positioning control</th><th rowspan="2">High-level positioning control</th><th colspan="2">Manual control</th></tr>
<tr><th>Machine HPR control</th><th>Fast HPR control</th><th>JOG/ Inching operation</th><th>Manual pulse generator operation</th></tr>
<tr><td rowspan="4">Forced stop</td><td>Forced stop input to Simple Motion module</td><td>All axes</td><td>No change</td><td>Servo OFF</td><td colspan="5" rowspan="4">Immediate stop
For the stop method of the servo amplifier, refer to each servo amplifier instruction manual or manual.</td><td rowspan="4">—</td></tr>
<tr><td>Servo READY OFF
• Servo amplifier power supply OFF</td><td rowspan="3">Each axis</td><td rowspan="3">No change</td><td>Servo amplifier has not been connected</td></tr>
<tr><td>• Servo alarm</td><td>Error</td></tr>
<tr><td>• Forced stop input to servo amplifier</td><td>Servo OFF</td></tr>
<tr><td>Fatal stop (Stop group 1)</td><td>Hardware stroke limit upper/lower limit error occurrence</td><td>Each axis</td><td>No change</td><td>Error</td><td colspan="5">Deceleration stop/rapid stop
(Select with "[Pr.37] Stop group 1 rapid stop selection".)</td><td>Deceleration stop</td></tr>
<tr><td rowspan="3">Emergency stop (Stop group 2)</td><td>Error occurs in PLC CPU</td><td rowspan="3">All axes</td><td>No change</td><td rowspan="3">Error</td><td colspan="5" rowspan="3">Deceleration stop/rapid stop
(Select with "[Pr.38] Stop group 2 rapid stop selection".)</td><td rowspan="3">Deceleration stop</td></tr>
<tr><td>PLC READY signal OFF</td><td>Turns OFF</td></tr>
<tr><td>Error in test mode (Note-2)</td><td>No change</td></tr>
</table>

Stop cause		Stop axis	M code ON signal after stop	Axis operation status after stopping ([Md.26])	Stop process					
					HPR control		Major positioning control	High-level positioning control	Manual control	
					Machine HPR control	Fast HPR control			JOG/ Inching operation	Manual pulse generator operation
Relatively safe stop (Stop group 3)	Axis error detection (Error other than stop group 1 or 2) (Note-1)	Each axis	No change	Error	Deceleration stop/rapid stop (Select with "[Pr.39] Stop group 3 rapid stop selection".)					Deceleration stop
Intentional stop (Stop group 3)	"Axis stop signal" ON from PLC CPU (Note-3)	Each axis	No change	Stopped (Standby)						
	"Stop signal" of external input signal ON (Note-3)									
	"Stop" input from GX Works2									

(Note-1): If an error occurs in a positioning data due to an invalid setting value, when the continuous positioning control uses multiple positioning data successively, it automatically decelerates at the previous positioning data. It does not stop rapidly even the setting value is rapid stop in stop group 3. If any of the following error occurs, the operation is performed up to the positioning data immediately before the positioning data where an error occurred, and then stops immediately.

- No command speed (Error code: 503)
- Outside linear movement amount range (Error code: 504)
- Large arc error deviation (Error code: 506)
- Software stroke limit + (Error code: 507)
- Software stroke limit - (Error code: 508)
- Sub point setting error (Error code: 525)
- End point setting error (Error code: 526)
- Center point setting error (Error code: 527)
- Outside radius range (Error code: 544)
- Illegal setting of ABS direction in unit of degree (Error code: 546)

(Note-2): The failure during the test mode occurs in the following case.

- When the communication cannot be executed between the personal computer and the PLC CPU

(Note-3): For the stop signal, it is recommended to check the condition that the axis is BUSY to perform the control, such as including the condition that the BUSY signal is ON in the interlock condition. By doing so, the error "Stop signal ON at start" (error code: 106) can be prevented from occurring depending on the timing.

REMARK

Provide the emergency stop circuits outside the servo system to prevent cases where danger may result from abnormal operation of the overall system in the event of an external power supply fault or servo system failure.

1.2.4 Outline for restarting

When a stop cause has occurred during operation with position control causing the axis to stop, positioning to the end point of the positioning data can be restarted from the stopped position by using the "[Cd.6] Restart command".
If issued during a continuous positioning or continuous path control operation, the restart command will cause the positioning to be re-executed using the current position (pointed by the positioning data No. associated with the moment when the movement was interrupted) as the start point.

■ When "[Cd.6] Restart command" is ON

(1) If the "[Md.26] Axis operation status" is stopped, positioning to the end point of the positioning data will be restarted from the stopped position regardless of the absolute system or incremental system.
(2) When "[Md.26] Axis operation status" is not stopped, the warning "Restart not possible" (warning code: 104) will be applied, and the restart command will be ignored.

(a) The restart operation when the axis 1 movement amount is 300 and the axis 2 movement amount is 600 is shown below.

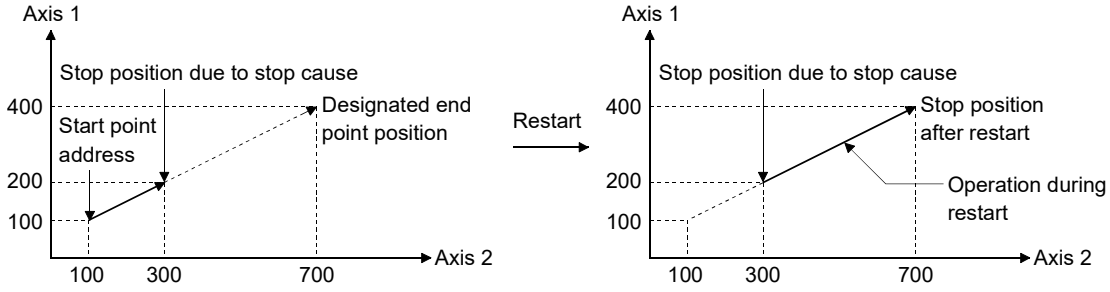

REMARK

If the positioning start signal/external command signal＊ is turned ON while the "[Md.26] Axis operation status" is standby or stopped, positioning will be restarted from the start of the positioning start data regardless of the absolute system or incremental system. (＊: When the external command signal is set to "External positioning start") (Same as normal positioning.)

[Example for incremental system]

(a) The positioning start operation, which stops the positioning control while executing that the axis 1 movement amount is 300 and the axis 2 movement amount is 600, is shown below.

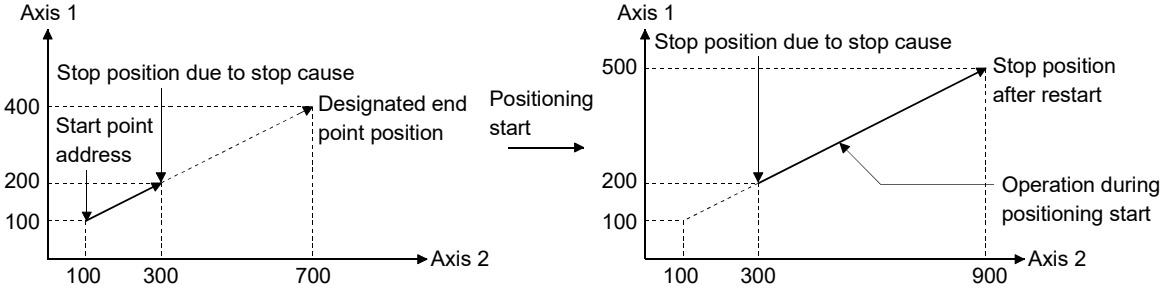

Chapter 2 System Configuration

In this chapter, the general image of the system configuration of the positioning control using Simple Motion module, the configuration devices, applicable CPU and the precautions of configuring the system are explained.
Prepare the required configuration devices to match the positioning control system.

2.1 General image of system 2- 2
2.2 Component list 2- 4
2.3 Applicable system 2- 8
2.4 How to check the function version and SERIAL No.....2-10
2.5 Restrictions by the SERIAL No. and version 2-11

2.1 General image of system

The general image of the system, including such as the QD77MS, PLC CPU and peripheral devices is shown below.

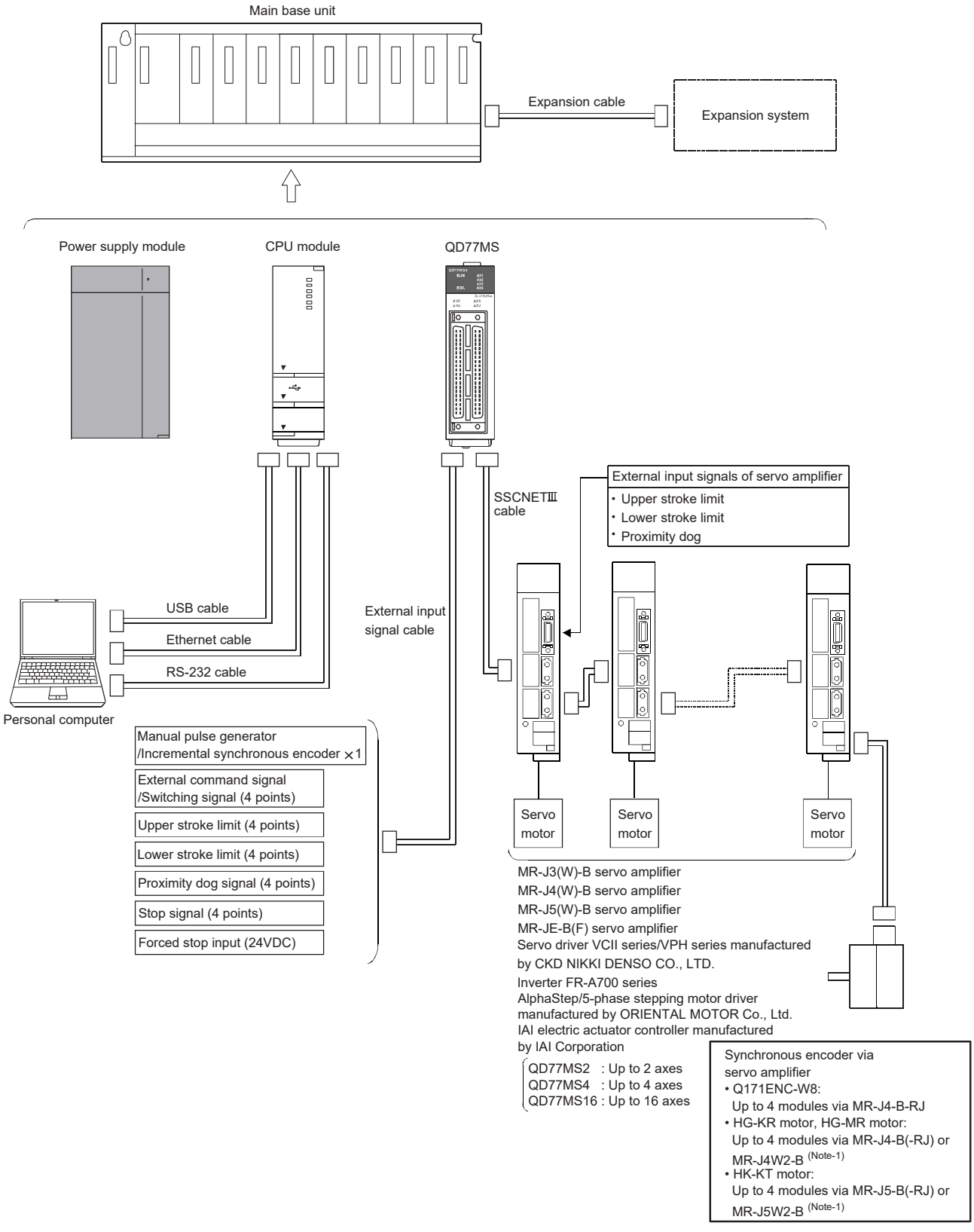

(Note-1): Use the servo amplifier which supports the scale measurement function.
Refer to the servo amplifier instruction manuals and manuals for the version of the servo amplifier which supports the scale measurement function and the encoder which can be used with the scale measurement function.

REMARK

(Note-1): Refer to Section "2.3 Applicable system" for the CPU modules that can be used.
(Note-2): Refer to the CPU module User's Manual for the base units that can be used.
(Note-3): The external input signal cannot be used depending on the connected device.
Confirm the specification of the connected device.

2.2 Component list

The positioning system using the Simple Motion module is configured of the following devices.

No.	Part name	Type	Remarks
1	Simple Motion module	QD77MS2 QD77MS4 QD77MS16	QD77MS □ Number of control axes MS: SSCNETⅢ(/H)model
2	Personal computer	Personal computer which supports Windows®	(Prepared by user) Refer to the "GX Works2 Version1 Operating Manual (Common)" for details.
3	RS-232 cable	QC30R2	(Prepared by user) An RS-232 cable is needed for connecting the CPU module with a personal computer. Refer to the "GX Works2 Version1 Operating Manual (Common)" for details.
4	USB cable	–	(Prepared by user) A USB cable is needed for connecting the CPU module with a personal computer. Refer to the "GX Works2 Version1 Operating Manual (Common)" for details.
5	Ethernet cable	–	(Prepared by user) An Ethernet cable is needed for connecting the CPU module with a personal computer. Refer to the "GX Works2 Version1 Operating Manual (Common)" for details.
6	Servo amplifier	–	(Prepared by user)
7	Manual pulse generator	–	(Prepared by user) Recommended: MR-HDP01 (Manufactured by Mitsubishi Electric Corporation)
8	SSCNETⅢ cable (Note-1)	–	(Prepared by user) Cables are needed for connecting the Simple Motion module with a servo amplifier, or between servo amplifiers.
9	External input signal cable (Note-1)	–	(Prepared by user) Cables are needed for connecting the Simple Motion module with an external device. (Prepare them referring to the manuals for the connected devices and information given in 3.4.2 of this manual.)

(Note-1): The cable for connecting the Simple Motion module and servo amplifiers. Refer to each servo amplifier instruction manual or manual for details.

[SSCNETⅢ cable]

Model name		Cable length [m(ft.)]	Description
MR-J3BUS_M (Standard cord for inside panel)	MR-J3BUS015M	0.15 (0.49)	• Simple Motion module ↔ MR-J5(W)-B/MR-J4(W)-B/ MR-JE-B(F)/MR-J3(W)-B • MR-J5(W)-B/MR-J4(W)-B/ MR-JE-B(F)/MR-J3(W)-B ↔ MR-J5(W)-B/MR-J4(W)-B/ MR-JE-B(F)/MR-J3(W)-B
	MR-J3BUS03M	0.3 (0.98)	
	MR-J3BUS05M	0.5 (1.64)	
	MR-J3BUS1M	1 (3.28)	
	MR-J3BUS3M	3 (9.84)	
MR-J3BUS_M-A (Standard cable for outside panel)	MR-J3BUS5M-A	5 (16.40)	
	MR-J3BUS10M-A	10 (32.81)	
	MR-J3BUS20M-A	20 (65.62)	
MR-J3BUS_M-B (Long distance cable)	MR-J3BUS30M-B	30 (98.43)	
	MR-J3BUS40M-B	40 (131.23)	
	MR-J3BUS50M-B	50 (164.04)	

_= Cable length
(015: 0.15m (0.49ft.), 03: 0.3m (0.98ft.), 05: 0.5m (1.64ft.), 1: 1m (3.28ft.), 3: 3m (9.84ft.), 5: 5m (16.40ft.), 10: 10m (32.81ft.), 20: 20m (65.62ft.), 30: 30m (98.43ft.), 40: 40m (131.23ft.), 50: 50m (164.04ft.))

[External input wiring connector]

Part name	Specification
Applicable connector	A6CON1, A6CON2, A6CON4 (Sold separately)
Applicable wire size	0.3mm^2 (When A6CON1 and A6CON4 are used), AWG28 to AWG24 (When A6CON2 is used)

■ Specifications of recommended manual pulse generator

Item	Specification
Model name	MR-HDP01
Ambient temperature	-10 to 60°C
Pulse resolution	25PLS/rev (100 PLS/rev after magnification by 4)
Output method	Voltage-output, Output current Max. 20mA
Power supply voltage	4.5 to 13.2VDC
Current consumption	60mA
Output level	"H" level : Power supply voltage (Note-1) -1V or more (in no load) "L" level : 0.5V or less (with maximum leading-in)
Life time	1000000 revolutions (at 200r/min)
Permitted axial loads	Radial load: Max. 19.6N
	Thrust load: Max. 9.8N
Weight	0.4 [kg]
Number of max. revolution	Instantaneous Max. 600r/min. normal 200r/min
Pulse signal status	2 signals: A-phase, B-phase, 90° phase difference
Start friction torque	0.06N•m (20°C)

(Note-1): If a separate power supply is used, use a stabilized power supply of voltage 5VDC ± 0.25V.

■ Serial absolute synchronous encoder specifications

Item	Specifications
Model name	Q171ENC-W8 (Note-1)
Ambient temperature	-5 to 55°C
Resolution	4194304PLS/rev
Transmission method	Serial communications (Connected to MR-J4-B-RJ)
Direction of increasing addresses	CCW (viewed from end of shaft)
Protective construction	Dustproof/Waterproof (IP67: Except for the shaft-through portion.)
Permitted speed at power ON	3600r/min
Permitted speed at power OFF (Note-2)	500r/min
Permitted axial loads	Radial load : Up to 19.6N, Thrust load : Up to 9.8N
Runout at input shaft tip	0.02mm(0.00079 inch) or less, (15mm(0.59 inch) from tip)
Start friction torque	0.04N•m (20°C)
Recommended coupling	Bellows coupling
Permitted angular acceleration	40000rad/s^2
Vibration resistance	5G (50 to 200Hz)
Shock resistance	50G (11ms or less)
Internal current consumption [A]	0.25
Mass [kg]	0.6
Connecting cable [m(ft.)]	Q170ENCCBL_M (_=Cable length : 2 (6.56), 5 (16.40), 10 (32.81), 20 (65.62), 30 (98.43), 50 (164.04))
Communications method	Differential driver/receiver
Transmission distance	Up to 50m (164.04ft.)

(Note-1): When "o-ring" is required, please purchase separately by customers.

(Note-2): If it exceeds a permitted speed at power OFF, a position displacement is generated.

POINT

The serial absolute synchronous encoder backs up the absolute position with a battery for retaining the absolute position data of the connected servo amplifier (MR-J4-B-RJ).

■ Specifications of serial absolute synchronous encoder input (CN2L) of servo amplifier

Item	Specifications
Applicable types	Q171ENC-W8
Applicable signal types	Differential-output type : (SN75C1168 or equivalent)
Transmission method	Serial communications
Synchronous method	Counter-clock-wise (viewed from end of shaft)
Communication speed	2.5Mbps
Position detection method	Absolute (ABS) method
Resolution	4194304PLS/rev (22bit)
Number of modules	1/module (MR-J4-B-RJ)
External connector type	20 pin connector
Applicable connector for the external connection	MR-J3CN2 (Optional)
Connecting cable [m(ft.)]	Q170ENCCBL_M-A (_=Cable length: 2 (6.56), 5 (16.40), 10 (32.81), 20 (65.62), 30 (98.43), 50 (164.04))
Cable length	Up to 50m (164.04ft.)
Back up the absolute position.	Depends on the battery (MR-BAT6V1SET).
Battery service life time (value in actual)	10000[h] (When MR-BAT6V1SET is used while the device is turned OFF at the ambient temperature of 25°C)

2.3 Applicable system

(1) Number of applicable modules

Pay attention to the power supply capacity before mounting modules because power supply capacity may be insufficient depending on the combination with other modules or the number of mounted modules.
If the power supply capacity is insufficient, change the combination of the modules.

(a) When mounted with a CPU module

Applicable CPU module			No. of modules (Note-1)	Base unit (Note-2)	
CPU type		CPU model		Main base unit	Extension base unit
PLC CPU	Basic model QCPU	Q00JCPU	Up to 8 modules	○	○
		Q00CPU	Up to 24 modules		
		Q01CPU			
	High performance model QCPU	Q02CPU	Up to 64 modules	○	○
		Q02HCPU			
		Q06HCPU			
		Q12HCPU			
		Q25HCPU			
	Process CPU	Q02PHCPU	Up to 64 modules	○	○
		Q06PHCPU			
		Q12PHCPU			
		Q25PHCPU			
	Redundant CPU	Q12PRHCPU	Up to 53 modules	×	○
		Q25PRHCPU			
	Universal model QCPU	Q00UJCPU	Up to 8 modules	○	○
		Q00UCPU	Up to 24 modules	○	○
		Q01UCPU			
		Q02UCPU	Up to 36 modules		
		Q03UDCPU	Up to 64 modules		
		Q04UDHCPU			
		Q06UDHCPU			
		Q10UDHCPU			
		Q13UDHCPU			
		Q20UDHCPU			
		Q26UDHCPU			
		Q03UDECPU			
		Q04UDEHCPU			
		Q06UDEHCPU			
		Q10UDEHCPU			
		Q13UDEHCPU			
		Q20UDEHCPU			
		Q26UDEHCPU			
	Universal model QnUDV (High speed type CPU)	Q03UDVCPU	Up to 64 modules	○	○
		Q04UDVCPU			
		Q06UDVCPU			
		Q13UDVCPU			
		Q26UDVCPU			

○: Applicable, ×: N/A

(Note-1): Limited within the range of I/O points for the CPU module.

(Note-2): Can be installed to any I/O slot of a base unit.

(b) Mounting to a MELSECNET/H remote I/O station

Applicable network module	No. of modules (Note-1)	Base unit (Note-2)	
		Main base unit of remote I/O station	Extension base unit of remote I/O station
QJ72LP25-25	Max. 64 modules	○	○
QJ72LP25G			
QJ72BR15			

○: Installation possible, ×: Installation not possible

(Note-1): Within the I/O point range of network module only.

(Note-2): It can be installed in any of the I/O slots of installable base unit.

REMARK

The basic model QCPU cannot configure the MELSECNET/H remote I/O network.

(2) Compatibility with multiple CPU system

When using the QD77MS in a multiple CPU system, refer to the QCPU User's Manual (multiple CPU system).

(3) Programming tool

The applicable programming tool's versions of the QD77MS are shown below.
(For the applicable programming tool's versions of the CPU module, refer to the "QCPU User's Manual (Hardware Design, Maintenance and Inspection)".)

	Version	
	GX Works2	MR Configurator2
QD77MS2	Version 1.77F or later	Version 1.09K or later
QD77MS4		
QD77MS16		

REMARK

QD77MS cannot be supported with GX Developer, GX Configurator-QP and MR Configurator.
Use GX Works2 and MR Configurator2 to use QD77MS.

2.4 How to check the function version and SERIAL No.

The function version and the SERIAL No. of the Simple Motion module can be checked in the following methods.

(1) Checking on the front of the module

The serial No. on the rating plate is also indicated on the front of the module (lower part).

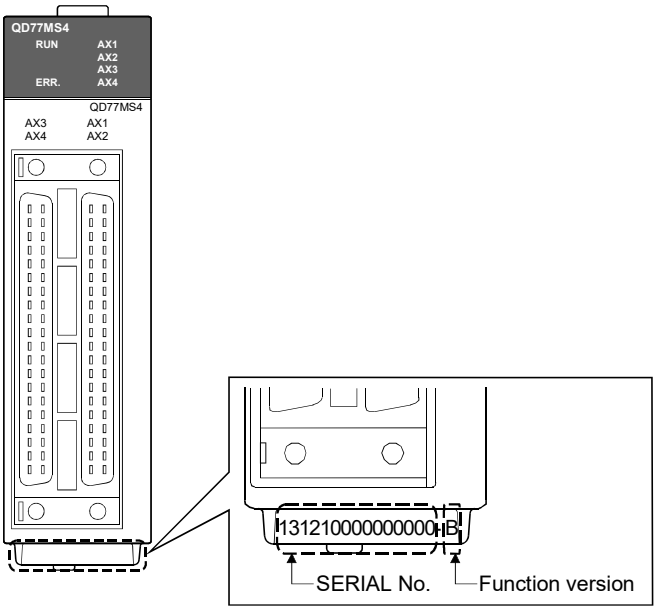

(2) Confirming by the software

Check the function version and SERIAL No. in "Product Information" displayed on System monitor "Product Information List" of GX Works2.

2.5 Restrictions by the SERIAL No. and version

There are restrictions in the function that can be used by the SERIAL No. of the Simple Motion module and the version of GX Works2.
The combination of each version and function is shown below.

Function	QD77MS2/QD77MS4		QD77MS16		Reference
	First five digits of SERIAL No. (Note-1)	GX Works2	First five digits of SERIAL No. (Note-1)	GX Works2	
Inverter FR-A700 series	14062 or later	1.492N or later	14062 or later	1.492N or later	Appendix 6.2
Driver communication function	15042 or later	1.492N or later	15042 or later	1.492N or later	Section 14.9
Synchronous encoder via servo amplifier					(Note-2)
Mark detection function (Changes latch data range upper limit value/lower limit value during mark detection.)					Section 14.10
External command signal compensation valid/invalid setting					Section 5.2.7
Operation cycle setting for QD77MS2/QD77MS4	15062 or later	1.493P or later	—	—	Section 5.2.7 Section 5.6.1
Servo driver (VCII series) manufactured by CKD NIKKI DENSO CO., LTD. (SSCNETⅢ/H)	16012 or later	1.507D or later	16012 or later	1.507D or later	Appendix 6.1
Servo driver (VPH series) manufactured by CKD NIKKI DENSO CO., LTD.	17102 or later	1.540N or later	17102 or later	1.540N or later	
MR-JE-B(F)	16102 or later	1.525X or later	16102 or later	1.525X or later	Appendix 6.5
Hot line forced stop function	16102 or later	—	16102 or later	—	Section 14.16
AlphaStep/5-phase stepping motor driver manufactured by ORIENTAL MOTOR Co., Ltd. (SSCNETⅢ/H)	17072 or later	1.535H or later	17072 or later	1.535H or later	Appendix 6.3
IAI electric actuator controller manufactured by IAI Corporation (SSCNETⅢ/H)	17072 or later	1.540N or later	17072 or later	1.540N or later	Appendix 6.4
Optional data monitor function data type Internal temperature of encoder, Unit power consumption (Used point: 2 words)	18082 or later	1.550Y or later	18082 or later	1.550Y or later	Section 14.11
Command generation axis	19032 or later	1.565P or later	19032 or later	1.565P or later	(Note-2)
Forced stop (Buffer memory input)	19032 or later	1.565P or later	19032 or later	1.565P or later	Section 13.4.5
Servo amplifier command value error check function	20112 or later	1.590Q or later	20112 or later	1.590Q or later	Section 14.15
MR-J5(W)-B	23092 or later	1.610L or later	23092 or later	1.610L or later	Appendix 6.6

(Note-1): The serial number can be checked on the "Product Information List" screen in GX Works2.
(Note-2): "MELSEC-Q/L QD77MS/QD77GF/LD77MS/LD77MH Simple Motion Module User's Manual (Synchronous Control)"

MEMO

Chapter 3 Specifications and Functions

The various specifications of the Simple Motion module are explained in this chapter.

The "Performance specifications", "List of functions", "Specifications of input/output signals with PLC CPU", and "Specifications of interfaces with external devices", etc., are described as information required when designing the positioning system.
Confirm each specification before designing the positioning system.

3.1 Performance specifications 3- 2
3.2 List of functions 3- 4
3.2.1 QD77MS control functions 3- 4
3.2.2 QD77MS main functions 3- 7
3.2.3 QD77MS sub functions 3- 9
3.2.4 QD77MS common functions 3-11
3.2.5 Combination of QD77MS main functions and sub functions 3-14
3.3 Specifications of input/output signals with PLC CPU 3-16
3.3.1 List of input/output signals with PLC CPU 3-16
3.3.2 Details of input signals (QD77MS → PLC CPU) 3-19
3.3.3 Details of output signals (PLC CPU → QD77MS) 3-21
3.4 Specifications of interfaces with external devices 3-23
3.4.1 Electrical specifications of input signals 3-23
3.4.2 Signal layout for external input connection connector 3-25
3.4.3 List of input signal details 3-27
3.4.4 Interface internal circuit 3-30
3.5 External circuit design 3-36

3.1 Performance specifications

Item \ Model		QD77MS2	QD77MS4	QD77MS16
Number of control axes		2 axes	4 axes	16 axes
Operation cycle		0.88ms/1.77ms		
Interpolation function		2-axis linear interpolation, 2-axis circular interpolation	2-, 3-, or 4-axis linear interpolation, 2-axis circular interpolation	
Control method		PTP (Point To Point) control, path control (both linear and arc can be set), speed control, speed-position switching control, position-speed switching control, speed-torque control		
Control unit		mm, inch, degree, PLS		
Positioning data		600 data/axis (Can be set with GX Works2 or sequence program.)		
Execution data backup function		Parameters, positioning data, and block start data can be saved on flash ROM. (battery-less backup)		
Positioning	Positioning system	PTP control: Incremental system/absolute system Speed-position switching control: Incremental system/absolute system Position-speed switching control: Incremental system Path control: Incremental system/absolute system		
	Positioning range	In absolute system • –214748364.8 to 214748364.7 (μm) • –21474.83648 to 21474.83647 (inch) • 0 to 359.99999 (degree) • –2147483648 to 2147483647 (PLS) In incremental system • –214748364.8 to 214748364.7 (μm) • –21474.83648 to 21474.83647 (inch) • –21474.83648 to 21474.83647 (degree) • –2147483648 to 2147483647 (PLS) In speed-position switching control (INC mode) / position-speed switching control • 0 to 214748364.7 (μm) • 0 to 21474.83647 (inch) • 0 to 21474.83647 (degree) • 0 to 2147483647 (PLS) In speed-position switching control (ABS mode) (Note-1) • 0 to 359.99999 (degree)		
	Speed command	0.01 to 20000000.00 (mm/min) 0.001 to 2000000.000 (inch/min) 0.001 to 2000000.000 (degree/min) (Note-2) 1 to 1000000000 (PLS/s)		
	Acceleration/ deceleration process	Trapezoidal acceleration/deceleration, S-curve acceleration/deceleration		
	Acceleration/ deceleration time	1 to 8388608 (ms) Four patterns can be set for each of acceleration time and deceleration time		
	Rapid stop deceleration time	1 to 8388608 (ms)		

<table>
<tr><th>Item \ Model</th><th>QD77MS2</th><th>QD77MS4</th><th>QD77MS16</th></tr>
<tr><td colspan="2">Starting time (ms) (Note-3)</td><td rowspan="6">0.88</td><td rowspan="12">0.88</td><td rowspan="12">1.77</td></tr>
<tr><td>1-axis linear control</td></tr>
<tr><td>1-axis speed control</td></tr>
<tr><td>2-axis linear interpolation control (Composite speed)</td></tr>
<tr><td>2-axis linear interpolation control (Reference axis speed)</td></tr>
<tr><td>2-axis circular interpolation control</td></tr>
<tr><td>2-axis speed control</td><td rowspan="6">–</td></tr>
<tr><td>3-axis linear interpolation control (Composite speed)</td></tr>
<tr><td>3-axis linear interpolation control (Reference axis speed)</td></tr>
<tr><td>3-axis speed control</td></tr>
<tr><td>4-axis linear interpolation control</td></tr>
<tr><td>4-axis speed control</td></tr>
<tr><td colspan="2">External wiring connection system</td><td colspan="3">40-pin connector</td></tr>
<tr><td colspan="2">Applicable wire size</td><td colspan="3">0.3mm^2 (When A6CON1 and A6CON4 are used), AWG28 to AWG24 (When A6CON2 is used)</td></tr>
<tr><td colspan="2">External input wiring connector</td><td colspan="3">A6CON1, A6CON2, A6CON4 (Sold separately)</td></tr>
<tr><td rowspan="3">SSCNETⅢ cable</td><td>MR-J3BUS_M (Note-4)</td><td colspan="3">• QD77MS ↔ MR-J5(W)-B/MR-J4(W)-B/MR-JE-B(F)/MR-J3(W)-B/ MR-J5(W)-B/MR-J4(W)-B/MR-JE-B(F)/MR-J3(W)-B ↔ MR-J5(W)-B/MR-J4(W)-B/MR-JE-B(F)/ MR-J3(W)-B
• Standard cord for inside panel
0.15m(0.49ft.), 0.3m(0.98ft.), 0.5m(1.64ft.), 1m(3.28ft.), 3m(9.84ft.)</td></tr>
<tr><td>MR-J3BUS_M-A (Note-4)</td><td colspan="3">• QD77MS ↔ MR-J5(W)-B/MR-J4(W)-B/MR-JE-B(F)/MR-J3(W)-B/ MR-J5(W)-B/MR-J4(W)-B/MR-JE-B(F)/MR-J3(W)-B ↔ MR-J5(W)-B/MR-J4(W)-B/MR-JE-B(F)/ MR-J3(W)-B
• Standard cable for outside panel
5m(16.40ft.), 10m(32.81ft.), 20m(65.62ft.)</td></tr>
<tr><td>MR-J3BUS_M-B (Note-4), (Note-5)</td><td colspan="3">• QD77MS ↔ MR-J5(W)-B/MR-J4(W)-B/MR-JE-B(F)/MR-J3(W)-B/ MR-J5(W)-B/MR-J4(W)-B/MR-JE-B(F)/MR-J3(W)-B ↔ MR-J5(W)-B/MR-J4(W)-B/MR-JE-B(F)/ MR-J3(W)-B
• Long distance cable
30m(98.43ft.), 40m(131.23ft.), 50m(164.04ft.)</td></tr>
<tr><td colspan="2">Internal current consumption (5 V DC) [A]</td><td colspan="2">0.6</td><td>0.75</td></tr>
<tr><td colspan="2">Flash ROM write count</td><td colspan="3">Max. 100000 times</td></tr>
<tr><td colspan="2">Number of occupied I/O points [points]</td><td colspan="3">32 (I/O assignment: Intelligent function module 32 points)</td></tr>
<tr><td colspan="2">External dimensions [mm(inch)]</td><td colspan="3">98.0 (3.86) (H) × 27.4 (1.08) (W) × 90.0 (3.54) (D)</td></tr>
<tr><td colspan="2">Mass [kg]</td><td>0.15</td><td colspan="2">0.16</td></tr>
</table>

(Note-1): The speed-position switching control (ABS mode) can be used only when the control unit is "degree". (For details, refer to Section 9.2.17.)

(Note-2): When "Speed control 10 x multiplier setting for degree axis function" is valid, this will be the setting range 0.01 to 20000000.00 (degree/min). (For details, refer to Section 13.7.10.)

(Note-3): Time from accepting the positioning start signal until BUSY signal turns ON.

(Note-4): _= Cable length
(015: 0.15m (0.49ft.), 03: 0.3m (0.98ft.), 05: 0.5m (1.64ft.), 1: 1m (3.28ft.), 3: 3m (9.84ft.), 5: 5m (16.40ft.), 10: 10m (32.81ft.), 20: 20m (65.62ft.), 30: 30m (98.43ft.), 40: 40m (131.23ft.), 50: 50m (164.04ft.))

(Note-5): For the cable of less than 30m (98.43ft.), contact your nearest Mitsubishi sales representative.

3.2 List of functions

3.2.1 QD77MS control functions

The Simple Motion module has several functions. In this manual, the Simple Motion module functions are categorized and explained as follows.

■ Main functions

(1) HPR control

"HPR control" is a function (Fast HPR) that established the start point for carrying out positioning control (Machine HPR), and carries out positioning toward that start point. This is used to return a workpiece, located at a position other than the HP when the power is turned ON or after positioning stop, to the HP. The "HPR control" is pre-registered in the Simple Motion module as the "Positioning start data No. 9001 (Machine HPR)", and "Positioning start data No. 9002 (Fast HPR)". (Refer to Chapter 8 "HPR Control".)

(2) Major positioning control

This control is carried out using the "Positioning data" stored in the Simple Motion module. Positioning control, such as position control and speed control, is executed by setting the required items in this "positioning data" and starting that positioning data. An "operation pattern" can be set in this "positioning data", and with this whether to carry out control with continuous positioning data (ex.: positioning data No. 1, No. 2, No. 3, ...) can be set. (Refer to Chapter 9 "Major Positioning Control".)

(3) High-level positioning control

This control executes the "positioning data" stored in the Simple Motion module using the "block start data". The following types of applied positioning control can be carried out.

- Random blocks, handling several continuing positioning data items as "blocks", can be executed in the designated order.
- "Condition judgment" can be added to position control and speed control.
- The operation of the designated positioning data No. that is set for multiple axes can be started simultaneously. (Command is output simultaneously to multiple servo amplifiers.)
- The designated positioning data can be executed repeatedly, etc., (Refer to Chapter 10 "High-Level Positioning Control".)

(4) Manual control

This control executes the random positioning operation by inputting a signal into the Simple Motion module from an external device. Use this manual control to move the workpiece to a random position (JOG operation), and to finely adjust the positioning (inching operation, manual pulse generator operation), etc. (Refer to Chapter 11 "Manual Control".)

(5) Expansion control

The following controls other than the positioning control can be executed. (Refer to Chapter 12 "Expansion Control".)

- Speed control and torque control not including the position loop for the command to servo amplifier (Speed-torque control).
- Synchronous control with gear, shaft, change gear and cam not by mechanical, but by software use "synchronous control parameter", and is synchronized with input axis (Synchronous control).

■ Sub functions

When executing the main functions, control compensation, limits and functions can be added. (Refer to Chapter 13 "Control Sub Functions".)

■ Common functions

Common control using the Simple Motion module for "parameter initialization" or "backup of execution data" can be carried out. (Refer to Chapter 14 "Common Functions".)

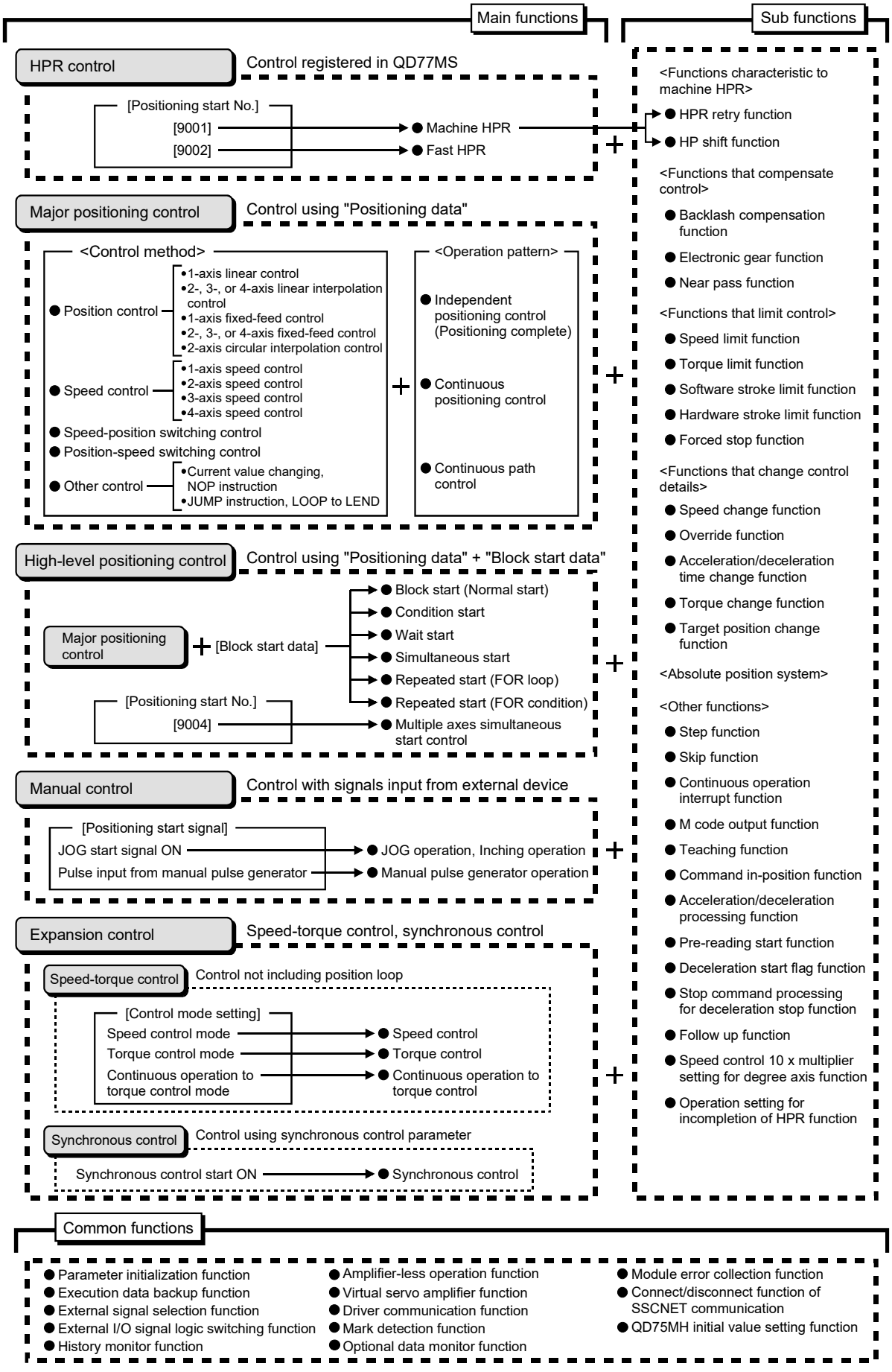
Main functions
Sub functions
HPR control
Control registered in QD77MS
[Positioning start No.]
[9001]
[9002]
Machine HPR
Fast HPR
Major positioning control
Control using "Positioning data"
<Control method>
Position control
•1-axis linear control
•2-, 3-, or 4-axis linear interpolation control
•1-axis fixed-feed control
•2-, 3-, or 4-axis fixed-feed control
•2-axis circular interpolation control
Speed control
•1-axis speed control
•2-axis speed control
•3-axis speed control
•4-axis speed control
Speed-position switching control
Position-speed switching control
Other control
•Current value changing, NOP instruction
•JUMP instruction, LOOP to LEND
<Operation pattern>
Independent positioning control (Positioning complete)
Continuous positioning control
Continuous path control
High-level positioning control
Control using "Positioning data" + "Block start data"
Major positioning control
[Block start data]
Block start (Normal start)
Condition start
Wait start
Simultaneous start
Repeated start (FOR loop)
Repeated start (FOR condition)
[Positioning start No.]
[9004]
Multiple axes simultaneous start control
Manual control
Control with signals input from external device
[Positioning start signal]
JOG start signal ON
Pulse input from manual pulse generator
JOG operation, Inching operation
Manual pulse generator operation
Expansion control
Speed-torque control, synchronous control
Speed-torque control
Control not including position loop
[Control mode setting]
Speed control mode
Torque control mode
Continuous operation to torque control mode
Speed control
Torque control
Continuous operation to torque control
Synchronous control
Control using synchronous control parameter
Synchronous control start ON
Synchronous control
<Functions characteristic to machine HPR>
HPR retry function
HP shift function
<Functions that compensate control>
Backlash compensation function
Electronic gear function
Near pass function
<Functions that limit control>
Speed limit function
Torque limit function
Software stroke limit function
Hardware stroke limit function
Forced stop function
<Functions that change control details>
Speed change function
Override function
Acceleration/deceleration time change function
Torque change function
Target position change function
<Absolute position system>
<Other functions>
Step function
Skip function
Continuous operation interrupt function
M code output function
Teaching function
Command in-position function
Acceleration/deceleration processing function
Pre-reading start function
Deceleration start flag function
Stop command processing for deceleration stop function
Follow up function
Speed control 10 x multiplier setting for degree axis function
Operation setting for incompletion of HPR function
Common functions
Parameter initialization function
Execution data backup function
External signal selection function
External I/O signal logic switching function
History monitor function
Amplifier-less operation function
Virtual servo amplifier function
Driver communication function
Mark detection function
Optional data monitor function
Module error collection function
Connect/disconnect function of SSCNET communication
QD75MH initial value setting function

3.2.2 QD77MS main functions

The outline of the main functions for positioning control with the Simple Motion module is described below. (Refer to "Section 2" for details on each function.)

Main functions			Details	Reference section
HPR control	Machine HPR control		Mechanically establishes the positioning start point using a proximity dog, etc. In the data setting method, no axis movement occurs since the current position is set as the home position. (Positioning start No. 9001)	8.2
	Fast HPR control		Positions a target to the HP address ([Md.21] Feed machine value) stored in the Simple Motion module using machine HPR. (Positioning start No. 9002)	8.3
Major positioning control	Position control	Linear control (1-axis linear control) (2-axis linear interpolation control) (3-axis linear interpolation control) (4-axis linear interpolation control)	Positions a target using a linear path to the address set in the positioning data or to the position designated with the movement amount.	9.2.2 9.2.3 9.2.4 9.2.5
		Fixed-feed control (1-axis fixed-feed control) (2-axis fixed-feed control) (3-axis fixed-feed control) (4-axis fixed-feed control)	Positions a target by the movement amount designated with the amount set in the positioning data. (With fixed-feed control, the "[Md.20] Command position value" is set to "0" when the control is started. With 2-, 3-, or 4-axis fixed-feed control, the fixed-feed is fed along a linear path obtained by interpolation.)	9.2.6 9.2.7 9.2.8 9.2.9
		2-axis circular interpolation control	Positions a target using an arc path to the address set in the positioning data, or to the position designated with the movement amount, sub point or center point.	9.2.10 9.2.11
	Speed control	Speed control (1-axis speed control) (2-axis speed control) (3-axis speed control) (4-axis speed control)	Continuously outputs the command corresponding to the command speed set in the positioning data.	9.2.12 9.2.13 9.2.14 9.2.15
	Speed-position switching control		First, carries out speed control, and then carries out position control (positioning with designated address or movement amount) by turning the "speed-position switching signal" ON.	9.2.16 9.2.17
	Position-speed switching control		First, carries out position control, and then carries out speed control (continuous output of the command corresponding to the designated command speed) by turning the "position-speed switching signal" ON.	9.2.18
	Other control	Current value changing	Changes the command position value ([Md.20]) to the address set in the positioning data. The following two methods can be used. (The feed machine value ([Md.21]) cannot be changed.) • Current value changing using positioning data • Current value changing using current value changing start No. (No. 9003)	9.2.19
		NOP instruction	No execution control method. When NOP instruction is set, this instruction is not executed and the operation of the next data is started.	9.2.20
		JUMP instruction	Unconditionally or conditionally jumps to designated positioning data No.	9.2.21
		LOOP	Carries out loop control with repeated LOOP to LEND.	9.2.22
		LEND	Returns to the beginning of the loop control with repeated LOOP to LEND.	9.2.23

Main functions		Details	Reference section
High-level positioning control	Block start (Normal start)	With one start, executes the positioning data in a random block with the set order.	10.3.2
	Condition start	Carries out condition judgment set in the "condition data" for the designated positioning data, and then executes the "block start data". When the condition is established, the "block start data" is executed. When not established, that "block start data" is ignored, and the next point's "block start data" is executed.	10.3.3
	Wait start	Carries out condition judgment set in the "condition data" for the designated positioning data, and then executes the "block start data". When the condition is established, the "block start data" is executed. When not established, stops the control until the condition is established. (Waits.)	10.3.4
	Simultaneous start	Simultaneously executes the designated positioning data of the axis designated with the "condition data". (Outputs commands at the same timing.)	10.3.5
	Repeated start (FOR loop)	Repeats the program from the block start data set with the "FOR loop" to the block start data set in "NEXT" for the designated number of times.	10.3.6
	Repeated start (FOR condition)	Repeats the program from the block start data set with the "FOR condition" to the block start data set in "NEXT" until the conditions set in the "condition data" are established.	10.3.7
	Multiple axes simultaneous start control	Starts the operation of multiple axes simultaneously according to the command output level. (Positioning start No. 9004, same as the "simultaneous start" above)	10.5
Manual control	JOG operation	Outputs a command to servo amplifier while the JOG start signal is ON.	11.2
	Inching operation	Outputs commands corresponding to minute movement amount by manual operation to servo amplifier. (Performs fine adjustment with the JOG start signal.)	11.3
	Manual pulse generator operation	Outputs pulses commanded with the manual pulse generator to servo amplifier.	11.4
Expansion control	Speed-torque control	Carries out the speed control or torque control that does not include the position loop for the command to servo amplifier by switching control mode.	12.1
	Synchronous control	Carries out the synchronous control that synchronizes with input axis by setting the system such as gear, shaft, change gear and cam to the "synchronous control parameter".	12.2

In "major positioning control" ("high-level positioning control"), "Operation pattern" can be set to designate whether to continue executing positioning data. Outlines of the "operation patterns" are given below.

[Da.1] Operation pattern	Details	Reference section
Independent positioning control (positioning complete)	When "independent positioning control" is set for the operation pattern of the started positioning data, only the designated positioning data will be executed, and then the positioning will end.	9.1.2
Continuous positioning control	When "continuous positioning control" is set for the operation pattern of the started positioning data, after the designated positioning data is executed, the program will stop once, and then the next following positioning data will be executed.	
Continuous path control	When "continuous path control" is set for the operation pattern of the started positioning data, the designated positioning data will be executed, and then without decelerating, the next following positioning data will be executed.	

3.2.3 QD77MS sub functions

The outline of the functions that assist positioning control using the Simple Motion module is described below. (Refer to "Section 2" for details on each function.)

Sub function		Details	Reference section
Functions characteristic to machine HPR	HPR retry function	This function retries the machine HPR with the upper/lower limit switches during the machine HPR. This allows machine HPR to be carried out even if the axis is not returned to before the proximity dog with JOG operation, etc.	13.2.1
	HP shift function	After returning to the machine HP, this function compensates the position by the designated distance from the machine HP and sets that position as the HP address.	13.2.2
Functions that compensate control	Backlash compensation function	This function compensates the mechanical backlash amount. Feed commands equivalent to the set backlash amount are output each time the movement direction changes.	13.3.1
	Electronic gear function	By setting the movement amount per pulse, this function can freely change the machine movement amount per commanded pulse. When the movement amount per pulse is set, a flexible positioning system that matches the machine system can be structured.	13.3.2
	Near pass function ∗1	This function suppresses the machine vibration when the positioning data is switched during continuous path control in the interpolation control.	13.3.3
Functions that limit control	Speed limit function	If the command speed exceeds "[Pr.8] Speed limit value" during control, this function limits the commanded speed to within the "[Pr.8] Speed limit value" setting range.	13.4.1
	Torque limit function	If the torque generated by the servomotor exceeds "[Pr.17] Torque limit setting value" during control, this function limits the generated torque to within the "[Pr.17] Torque limit setting value" setting range.	13.4.2
	Software stroke limit function	If a command outside of the upper/lower limit stroke limit setting range, set in the parameters, is issued, this function will not execute positioning for that command.	13.4.3
	Hardware stroke limit function	This function carries out deceleration stop with the hardware stroke limit switch.	13.4.4
	Forced stop function	This function stops all axes of the servo amplifier with the forced stop signal.	13.4.5
Functions that change control details	Speed change function	This function changes the speed during positioning. Set the new speed in the speed change buffer memory ([Cd.14] New speed value), and change the speed with the speed change request ([Cd.15]).	13.5.1
	Override function	This function changes the speed within a percentage of 1 to 300% during positioning. This is executed using "[Cd.13] Positioning operation speed override".	13.5.2
	Acceleration/deceleration time change function	This function changes the acceleration/deceleration time during speed change. (Functions added to the speed change function and override function)	13.5.3
	Torque change function	This function changes the "torque limit value" during control.	13.5.4
	Target position change function	This function changes the target position during positioning. Position and speed can be changed simultaneously.	13.5.5

Sub function		Details	Reference section
Absolute position system		This function restores the absolute position of designated axis. If the HPR is executed at the start of system, after that, it is unnecessary to carry out the HPR when the power is turned ON.	13.6
Other functions	Step function	This function temporarily stops the operation to confirm the positioning operation during debugging, etc. The operation can be stopped at each "automatic deceleration" or "positioning data".	13.7.1
	Skip function	This function stops (decelerates to a stop) the positioning being executed when the skip signal is input, and carries out the next positioning.	13.7.2
	M code output function	This function issues a command for a sub work (clamp or drill stop, tool change, etc.) corresponding to the M code No. (0 to 65535) that can be set for each positioning data.	13.7.3
	Teaching function	This function stores the address positioned with manual control into the "[Da.6] Positioning address/movement amount" having the designated positioning data No. ([Cd.39]).	13.7.4
	Command in-position function	At each automatic deceleration, this function calculates the remaining distance for the Simple Motion module to reach the positioning stop position. When the value is less than the set value, the "command in-position flag" is set to "1". When using another auxiliary work before ending the control, use this function as a trigger for the sub work.	13.7.5
	Acceleration/deceleration processing function	This function adjusts the acceleration/deceleration.	13.7.6
	Continuous operation interrupt function	This function interrupts continuous operation. When this request is accepted, the operation stops when the execution of the current positioning data is completed.	6.5.4
	Pre-reading start function	This function shortens the virtual start time.	13.7.7
	Deceleration start flag function	Function that turns ON the flag when the constant speed status or acceleration status switches to the deceleration status during position control, whose operation pattern is "Positioning complete", to make the stop timing known.	13.7.8
	Stop command processing for deceleration stop function	Function that selects a deceleration curve when a stop cause occurs during deceleration stop processing to speed 0.	13.7.9
	Follow up function	This function monitors the motor rotation amount with the servo turned OFF, and reflects it on the command position value.	13.8.2
	Speed control 10 x multiplier setting for degree axis function	This function is executed the positioning control by the 10 x speed of the command speed and the speed limit value when the setting unit is "degree".	13.7.10
	Operation setting for incompletion of HPR function	This function is provided to select whether positioning control is operated or not, when HPR request flag is ON.	13.7.11

∗1: The near pass function is featured as standard and is valid only for setting continuous path control for position control. It cannot be set to be invalid with parameters.

3.2.4 QD77MS common functions

The outline of the functions executed as necessary is described below.
(Refer to "Section 2" for details on each function.)

Common functions	Details	Reference section
Parameter initialization function	This function returns the "parameters" stored in the buffer memory/internal memory and flash ROM/internal memory (nonvolatile) of Simple Motion module to the default values. The following two methods can be used. 1) Method using sequence program 2) Method using GX Works2	14.2
Execution data backup function	This function stores the "setting data", currently being executed, into the flash ROM/internal memory (nonvolatile). 1) Method using sequence program 2) Method using GX Works2	14.3
External signal selection function	This function selects from the following signals when using the upper/lower limit signal, the proximity dog signal, and the stop signal. • External input signal of QD77MS • External input signal of servo amplifier • External input signal via CPU (buffer memory of QD77MS)	14.4
External I/O signal logic switching function	This function switches I/O signal logic according to externally connected devices. This function enables the use of the system that does not use b (N.C.)-contact signals, such as Upper/lower limit signal, by setting parameters to positive logic.	14.5
History monitor function	This function monitors errors, warnings, and start history of all axes.	14.6
Amplifier-less operation function	This function executes the positioning control of Simple Motion module without connecting to the servo amplifiers. It is used to debug the program at the start-up of the device or simulate the positioning operation.	14.7
Virtual servo amplifier function	This function executes the operation as the axis (virtual servo amplifier axis) that operates only command (instruction) virtually without servo amplifiers.	14.8
Driver communication function	This function uses the "Master-slave operation function" of servo amplifier. The Simple Motion module controls the master axis and the slave axis is controlled by data communication between servo amplifiers (driver communication) without Simple Motion module.	14.9
Mark detection function	This function is used to latch any data at the input timing of the mark detection signal (DI1 to DI4).	14.10

Common functions	Details	Reference section
Optional data monitor function	This function is used to store the data selected by user up to 4 data per axis to buffer memory and monitor them.	14.11
Module error collection function	This function collects errors occurred in the Simple Motion module in the PLC CPU. Holding the error contents in the PLC CPU, this function enables to check the error history even after the PLC CPU in powered off or reset.	14.12
Connect/disconnect function of SSCNET communication	Temporarily connect/disconnect of SSCNET communication is executed during system's power supply ON. This function is used to exchange the servo amplifiers or SSCNETⅢ cables.	14.13
QD75MH initial value setting function	This function is used to set the factory-set initial value of QD75MH for the setting data set in the QD77MS buffer memory/internal memory and flash ROM/internal memory (nonvolatile).	14.14
Servo amplifier command value error check function	This function is used to check the position command value to be sent to the servo amplifier and the deviation counter value to be received from the servo amplifier, and check that there is no error in the operation of the Simple Motion module and servo amplifier.	14.15
Hot line forced stop function	This function is used to execute deceleration stop safety for other axes when the servo alarm occurs in the servo amplifier MR-JE-B.	14.16

MEMO

3.2.5 Combination of QD77MS main functions and sub functions

With positioning control using the Simple Motion module, the main functions and sub functions can be combined and used as necessary. A list of the main function and sub function combinations is given below.

Main functions \ Sub functions			Combination with operation pattern. ∗1	HPR retry function	HP shift function	Backlash compensation function	Electronic gear function	Near pass function	
				Functions characteristic to machine HPR		Functions that compensate control			
HPR control	Machine HPR control		×	△ ∗11	○	○	○	∗2	
	Fast HPR control		×	×	×	○	○		
Major positioning control	Position control	1-axis linear control	○	×	×	○	○		
		2-, 3-, or 4-axis linear interpolation control	○	×	×	○	○		
		1-axis fixed-feed control	△ (Continuous path control cannot be set)	×	×	○	○		
		2-, 3-, or 4-axis fixed-feed control (interpolation)	△ (Continuous path control cannot be set)	×	×	○	○		
		2-axis circular interpolation control	○	×	×	○	○		
	Speed control (1- to 4-axis)		△ (Only independent positioning control can be set)	×	×	○	○		
	Speed-position switching control		△ (Continuous path control cannot be set)	×	×	○	○		
	Position-speed switching control		△ (Only independent positioning control can be set)						
	Other control	Current value changing	△ (Continuous path control cannot be set)	×	×	×	×		
		NOP instruction	×						
		JUMP instruction	×	×	×	×	×		
		LOOP to LEND							
Manual control	JOG operation, inching operation		×	×	×	○	○	×	
	Manual pulse generator operation		×	×	×	○	○	×	
Expansion control	Speed-torque control		×	×	×	×	○	×	
	Synchronous control (Output axis)		×	×	×	○	○	×	

∗1: The operation pattern is one of the "positioning data" setting items.
∗2: The near pass function is featured as standard and is valid only for setting continuous path control for position control.
∗3: Invalid during creep speed.
∗4: Invalid during continuous path control.
∗5: Combination with the inching operation is not available. (Inching operation does not perform acceleration/deceleration processing.)
∗6: Valid for the reference axis only.
∗7: Valid for only the case where a deceleration start is made during position control.
∗8: Change the current value using the positioning data. Disabled for a start of positioning start No. 9003.
∗9: Valid for "[Md.22] Speed command" and "[Md.28] Axis speed command".
∗10: Valid for a start of positioning start No.9003, but invalid for a start of positioning data (No. 1 to 600).
∗11: HPR retry function cannot be used during the scale origin signal detection method machine HPR.
∗12: Refer to Section 12.1 "Speed-torque control" for acceleration/deceleration processing in the speed-torque control.

	Functions that limit control					Functions that change control details					Other functions										
	Speed limit function	Torque limit function	Software stroke limit function	Hardware stroke limit function	Forced stop function	Speed change function	Override function	Acceleration/ deceleration time change function	Torque change function	Target position change function	Step function	Skip function	M code output function	Teaching function	Command in-position function	Acceleration/deceleration processing function	Pre-reading start function	Deceleration start flag function	Stop command processing for deceleration stop function	Speed control 10 x multiplier setting for degree axis function	Operation setting for incompletion of HPR function
	○	○	×	◎	○	△ ∗3	△ ∗3	△ ∗3	○	×	×	×	×	×	×	○	×	×	○	○	×
	○	○	×	◎	○	○	○	○	○	×	×	×	×	×	○	○	×	×	○	○	×
	○	○	○	◎	○	○	○	○	○	△ ∗4	○	○	○	×	○	○	○	○	○	○	○
	○	○	○	◎	○	○	○	○	○	×	○	○	○	×	○	○	○	△ ∗6	○	○	○
	○	○	○	◎	○	○	○	○	○	×	○	○	○	×	○	○	○	○	○	○	○
	○	○	○	◎	○	○	○	○	○	×	○	○	○	×	○	○	○	△ ∗6	○	○	○
	○	○	○	◎	○	○	○	○	○	×	○	○	○	×	○	○	○	×	○	×	○
	○	○	○	◎	○	○	○	○	○	×	×	×	○	×	×	○	○	×	○	○	○
	○	○	○	◎	○	○	○	○	○	×	○	○ ×	○	×	○	○	○	△ ∗7	○	○	○
	×	×	○ ×	◎ ×	○	×	×	×	×	×	○ ×	○ ×	△ ∗8 ×	×	×	×	×	×	×	×	△ ∗10 ×
	×	×	×	×	○	×	×	×	×	×	×	×	×	×	×	×	×	×	×	×	×
	○	○	○	◎	○	△ ∗5	△ ∗5	△ ∗5	○	×	×	×	×	○	×	△ ∗5	×	×	×	○	×
	×	○	○	◎	○	×	×	×	○	×	×	×	×	○	×	×	×	×	×	△ ∗9	×
	○	○	○	◎	○	×	×	×	○	×	×	×	×	×	×	△ ∗12	×	×	×	○	○
	×	○	○	◎	○	×	×	×	○	×	×	×	×	×	×	△ ∗13	×	×	×	△ ∗13	○

◎: Always combine, ○: Combination possible, △: Combination limited, ×: Combination not possible

∗13: Refer to "MELSEC-Q/L QD77MS/QD77GF/LD77MS/LD77MH Simple Motion Module User's Manual (Synchronous Control)" for details.

3.3 Specifications of input/output signals with PLC CPU

3.3.1 List of input/output signals with PLC CPU

The Simple Motion module uses 32 input points and 32 output points for exchanging data with the PLC CPU.
The input/output signals when the head I/O number of Simple Motion module is set to "0H" are shown below.
If it is set to other than "0H", change the I/O number according to setting of head I/O number.
Device X refers to the signals input from the Simple Motion module to the PLC CPU, and device Y refers to the signals output from the PLC CPU to the Simple Motion module.

(1) QD77MS2

Signal direction: QD77MS2 → PLC CPU			Signal direction: PLC CPU → QD77MS2		
Device No.	Signal name		Device No.	Signal name	
X0	READY		Y0	PLC READY	
X1	Synchronization flag		Y1	All axis servo ON	
X2	Use prohibited		Y2	Use prohibited	
X3			Y3		
X4	Axis 1	M code ON	Y4	Axis 1	Axis stop
X5	Axis 2		Y5	Axis 2	
X6	Use prohibited		Y6	Use prohibited	
X7			Y7		
X8	Axis 1	Error detection	Y8	Axis 1	Forward run JOG start
X9	Axis 2		Y9		Reverse run JOG start
XA	Use prohibited		YA	Axis 2	Forward run JOG start
XB			YB		Reverse run JOG start
XC	Axis 1	BUSY	YC	Use prohibited	
XD	Axis 2		YD		
XE	Use prohibited		YE		
XF			YF		
X10	Axis 1	Start complete	Y10	Axis 1	Positioning start
X11	Axis 2		Y11	Axis 2	
X12	Use prohibited		Y12	Use prohibited	
X13			Y13		
X14	Axis 1	Positioning complete	Y14	Axis 1	Execution prohibition flag
X15	Axis 2		Y15	Axis 2	
X16	Use prohibited		Y16	Use prohibited	
X17			Y17		
X18			Y18		
X19			Y19		
X1A			Y1A		
X1B			Y1B		
X1C			Y1C		
X1D			Y1D		
X1E			Y1E		
X1F			Y1F		

Important

[Y2, Y3], [Y6, Y7], [YC to YF], [Y12, Y13], [Y18 to Y1F], [X2, X3], [X6, X7], [XA, XB], [XE, YF], [X12, X13], and [X16 to X1F] are used by the system, and cannot be used by the user.
If these devices are used, the operation of the QD77MS2 will not be guaranteed.

(2) QD77MS4

Signal direction: QD77MS4 → PLC CPU			Signal direction: PLC CPU → QD77MS4		
Device No.	Signal name		Device No.	Signal name	
X0	READY		Y0	PLC READY	
X1	Synchronization flag		Y1	All axis servo ON	
X2	Use prohibited		Y2	Use prohibited	
X3			Y3		
X4	Axis 1	M code ON	Y4	Axis 1	Axis stop
X5	Axis 2		Y5	Axis 2	
X6	Axis 3		Y6	Axis 3	
X7	Axis 4		Y7	Axis 4	
X8	Axis 1	Error detection	Y8	Axis 1	Forward run JOG start
X9	Axis 2		Y9		Reverse run JOG start
XA	Axis 3		YA	Axis 2	Forward run JOG start
XB	Axis 4		YB		Reverse run JOG start
XC	Axis 1	BUSY	YC	Axis 3	Forward run JOG start
XD	Axis 2		YD		Reverse run JOG start
XE	Axis 3		YE	Axis 4	Forward run JOG start
XF	Axis 4		YF		Reverse run JOG start
X10	Axis 1	Start complete	Y10	Axis 1	Positioning start
X11	Axis 2		Y11	Axis 2	
X12	Axis 3		Y12	Axis 3	
X13	Axis 4		Y13	Axis 4	
X14	Axis 1	Positioning complete	Y14	Axis 1	Execution prohibition flag
X15	Axis 2		Y15	Axis 2	
X16	Axis 3		Y16	Axis 3	
X17	Axis 4		Y17	Axis 4	
X18	Use prohibited		Y18	Use prohibited	
X19			Y19		
X1A			Y1A		
X1B			Y1B		
X1C			Y1C		
X1D			Y1D		
X1E			Y1E		
X1F			Y1F		

Important

[Y2, Y3], [Y18 to Y1F], [X2, X3], and [X18 to X1F] are used by the system, and cannot be used by the user.

If these devices are used, the operation of the QD77MS4 will not be guaranteed.

(3) QD77MS16

Signal direction: QD77MS16 → PLC CPU			Signal direction: PLC CPU → QD77MS16		
Device No.	Signal name		Device No.	Signal name	
X0	READY		Y0	PLC READY	
X1	Synchronization flag		Y1	All axis servo ON	
X2	Use prohibited		Y2	Use prohibited	
X3			Y3		
X4			Y4		
X5			Y5		
X6			Y6		
X7			Y7		
X8			Y8		
X9			Y9		
XA			YA		
XB			YB		
XC			YC		
XD			YD		
XE			YE		
XF			YF		
X10	Axis 1	BUSY	Y10	Axis 1	Positioning start
X11	Axis 2		Y11	Axis 2	
X12	Axis 3		Y12	Axis 3	
X13	Axis 4		Y13	Axis 4	
X14	Axis 5		Y14	Axis 5	
X15	Axis 6		Y15	Axis 6	
X16	Axis 7		Y16	Axis 7	
X17	Axis 8		Y17	Axis 8	
X18	Axis 9		Y18	Axis 9	
X19	Axis 10		Y19	Axis 10	
X1A	Axis 11		Y1A	Axis 11	
X1B	Axis 12		Y1B	Axis 12	
X1C	Axis 13		Y1C	Axis 13	
X1D	Axis 14		Y1D	Axis 14	
X1E	Axis 15		Y1E	Axis 15	
X1F	Axis 16		Y1F	Axis 16	

POINT

(1) For QD77MS16, M code ON signal, error detection signal, start complete signal and positioning complete signal are assigned to the bit of "[Md.31] Status".

(2) For QD77MS16, axis stop signal, forward run JOG start signal, reverse run JOG start signal, execution prohibition flag are assigned to the buffer memory [Cd.180] to [Cd.183].

(3) For the command generation axis, M code ON signal, error detection signal, start complete signal and positioning complete signal are assigned to the bit of "[Md.31] Status" and the BUSY signal is assigned to the bit of "[Md.141] BUSY".

(4) For the command generation axis, axis stop signal, forward run JOG start signal, reverse run JOG start signal, execution prohibition flag, and positioning start signal are assigned to the buffer memory [Cd.180] to [Cd.184].
Refer to "MELSEC-Q/L QD77MS/QD77GF/LD77MS/LD77MH Simple Motion Module User's Manual (Synchronous Control)" for details of the command generation axis.

Important

[Y2 to YF] and [X2 to XF] are used by the system, and cannot be used by the user.
If these devices are used, the operation of the QD77MS16 will not be guaranteed.

3.3.2 Details of input signals (QD77MS → PLC CPU)

The ON/OFF timing and conditions of the input signals are shown below.

(1) QD77MS2/QD77MS4

Device No.	Signal name			Details
X0	READY		ON: READY OFF: Not READY/ Watch dog timer error	• When the PLC READY signal [Y0] turns from OFF to ON, the parameter setting range is checked. If no error is found, this signal turns ON. • When the PLC READY signal [Y0] turns OFF, this signal turns OFF. • When watch dog timer error occurs, this signal turns OFF. • This signal is used for interlock in a sequence program, etc. 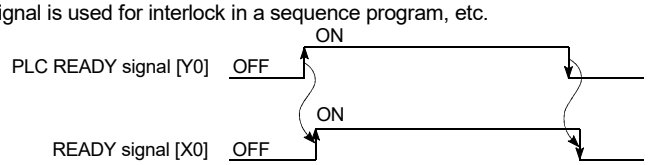
X1	Synchronization flag		OFF: Module access disabled ON: Module access enabled	• After the PLC is turned ON or the CPU module is reset, this signal turns ON if the access from the CPU module to the Simple Motion module is possible. • When "Asynchronous" is selected in the module synchronization setting of the CPU module, this signal can be used as interlock for the access from a sequence program to the Simple Motion module.
X4 X5 X6 X7	Axis 1 Axis 2 Axis 3 Axis 4	M code ON	OFF: M code is not set ON: M code is set	• In the WITH mode, this signal turns ON when the positioning data operation is started. In the AFTER mode, this signal turns ON when the positioning data operation is completed. • This signal turns OFF with the "[Cd.7] M code OFF request". • When M code is not designated (when "[Da.10] M code/Condition data No./Number of LOOP to LEND repetitions" is "0"), this signal will remain OFF. • With using continuous path control for the positioning operation, the positioning will continue even when this signal does not turn OFF. However, a warning will occur. (Warning code: 503) • When the PLC READY signal [Y0] turns OFF, the M code ON signal will also turn OFF. • If operation is started while the M code is ON, an error will occur.
X8 X9 XA XB	Axis 1 Axis 2 Axis 3 Axis 4	Error detection	OFF: No error ON: Error occurrence	• This signal turns ON when an error listed in Section 16.3 occurs, and turns OFF when the error is reset on "[Cd.5] Axis error reset".
XC XD XE XF	Axis 1 Axis 2 Axis 3 Axis 4	BUSY (Note-1)	OFF: Not BUSY ON: BUSY	• This signal turns ON at the start of positioning, HPR or JOG operation. It turns OFF when the "[Da.9] Dwell time/JUMP destination positioning data No." has passed after positioning stops. (This signal remains ON during positioning.) • This signal turns OFF when the positioning is stopped with step operation. • During manual pulse generator operation, this signal turns ON while the "[Cd.21] Manual pulse generator enable flag" is ON. • This signal turns OFF at error completion or positioning stop.
X10 X11 X12 X13	Axis 1 Axis 2 Axis 3 Axis 4	Start complete	OFF: Start incomplete ON: Start complete	• This signal turns ON when the positioning start signal turns ON and the Simple Motion module starts the positioning process. (The start complete signal also turns ON during HPR control.) 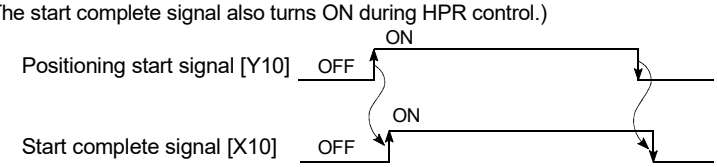
X14 X15 X16 X17	Axis 1 Axis 2 Axis 3 Axis 4	Positioning complete (Note-2)	OFF: Positioning incomplete ON: Positioning complete	• This signal turns ON for the time set in "[Pr.40] Positioning complete signal output time" from the instant when the positioning control for each positioning data No. is completed. For the interpolation control, the positioning completed signal of interpolation axis turns ON during the time set to the reference axis. (It does not turn ON when "[Pr.40] Positioning complete signal output time" is "0".) • If positioning (including HPR), JOG/Inching operation, or manual pulse generator operation is started while this signal is ON, the signal will turn OFF. • This signal will not turn ON when speed control or positioning is canceled midway.

Important

(Note-1): The BUSY signal turns ON even when position control of movement amount 0 is executed. However, since the ON time is short, the ON status may not to be detected in the sequence program.

(Note-2): "Positioning complete" of the QD77MS2/QD77MS4 refers to the point when the pulse output from QD77MS2/QD77MS4 is completed.
Thus, even if the QD77MS2/QD77MS4's positioning complete signal turns ON, the system may continue operation.

(2) QD77MS16

Device No.	Signal name			Details
X0	READY		ON: READY OFF: Not READY/ Watch dog timer error	• When the PLC READY signal [Y0] turns from OFF to ON, the parameter setting range is checked. If no error is found, this signal turns ON. • When the PLC READY signal [Y0] turns OFF, this signal turns OFF. • When watch dog timer error occurs, this signal turns OFF. • This signal is used for interlock in a sequence program, etc. 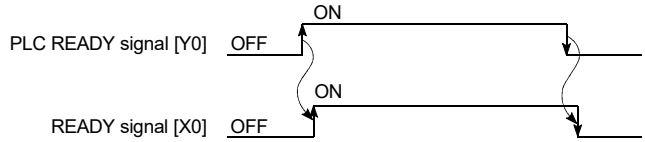
X1	Synchronization flag		OFF: Module access disabled ON: Module access enabled	• After the PLC is turned ON or the CPU module is reset, this signal turns ON if the access from the CPU module to the Simple Motion module is possible. • When "Asynchronous" is selected in the module synchronization setting of the CPU module, this signal can be used as interlock for the access from a sequence program to the Simple Motion module.
X10 X11 X12 X13 X14 X15 X16 X17 X18 X19 X1A X1B X1C X1D X1E X1F	Axis 1 Axis 2 Axis 3 Axis 4 Axis 5 Axis 6 Axis 7 Axis 8 Axis 9 Axis 10 Axis 11 Axis 12 Axis 13 Axis 14 Axis 15 Axis 16	BUSY (Note-1)	OFF: Not BUSY ON: BUSY	• This signal turns ON at the start of positioning, HPR or JOG operation. It turns OFF when the "[Da.9] Dwell time/JUMP destination positioning data No." has passed after positioning stops. (This signal remains ON during positioning.) • This signal turns OFF when the positioning is stopped with step operation. • During manual pulse generator operation, this signal turns ON while the "[Cd.21] Manual pulse generator enable flag" is ON. • This signal turns OFF at error completion or positioning stop.

Important

(Note-1): The BUSY signal turns ON even when position control of movement amount 0 is executed. However, since the ON time is short, the ON status may not to be detected in the sequence program.

3.3.3 Details of output signals (PLC CPU → QD77MS)

The ON/OFF timing and conditions of the output signals are shown below.

(1) QD77MS2/QD77MS4

Device No.	Signal name			Details
Y0	PLC READY		OFF: PLC READY OFF ON: PLC READY ON	(a) This signal notifies the Simple Motion module that the PLC CPU is normal. • It is turned ON/OFF with the sequence program. • The PLC READY signal is turned ON during positioning control, HPR control, JOG operation, inching operation, manual pulse generator operation and speed-torque control ,etc. unless the system is in the GX Works2 test function. (b) When the data (parameter etc.) are changed, this signal is turned OFF depending on the parameter (Refer to Chapter 7.). (c) The following processes are carried out when this signal turns from OFF to ON. • The parameter setting range is checked. • The READY signal [X0] turns ON. (d) The following processes are carried out when this signal turns from ON to OFF. In these cases, the OFF time should be set to 100ms or more. • The READY signal [X0] turns OFF. • The operating axis stops. • The M code ON signal [X4 to X7] for each axis turns OFF, and "0" is stored in "[Md.25] Valid M code". (e) When parameters or positioning data (No. 1 to 600) are written from the GX Works2 or PLC CPU to the flash ROM, this signal will turn OFF.
Y1	All axis servo ON		OFF: Servo OFF ON: Servo ON	• All the servo amplifiers connected to the Simple Motion module are set to servo ON or servo OFF.
Y4 Y5 Y6 Y7	Axis 1 Axis 2 Axis 3 Axis 4	Axis stop	OFF: Axis stop not requested ON: Axis stop requested	• When the axis stop signal turns ON, the HPR control, positioning control, JOG operation, inching operation, manual pulse generator operation and speed-torque control etc. will stop. • By turning the axis stop signal ON during positioning operation, the positioning operation will be "stopped". • Whether to decelerate stop or rapidly stop can be selected with "[Pr.39] Stop group 3 rapid stop selection". • During interpolation control of the positioning operation, if the axis stop signal of any axis turns ON, all axes in the interpolation control will decelerate and stop.
Y8 Y9 YA YB YC YD YE YF	Axis 1 Axis 1 Axis 2 Axis 2 Axis 3 Axis 3 Axis 4 Axis 4	Forward run JOG start Reverse run JOG start Forward run JOG start Reverse run JOG start Forward run JOG start Reverse run JOG start Forward run JOG start Reverse run JOG start	OFF: JOG not started ON: JOG started	• When the JOG start signal is ON, JOG operation will be carried out at the "[Cd.17] JOG speed". When the JOG start signal turns OFF, the operation will decelerate and stop. • When inching movement amount is set, the designated movement amount is output for one operation cycle and then the operation stops.
Y10 Y11 Y12 Y13	Axis 1 Axis 2 Axis 3 Axis 4	Positioning start	OFF: Positioning start not requested ON: Positioning start requested	• HPR operation or positioning operation is started. • The positioning start signal is valid at the rising edge, and the operation is started. • When this signal turns ON during BUSY, the warning "Start during operation" (warning code: 100) will occur.
Y14 Y15 Y16 Y17	Axis 1 Axis 2 Axis 3 Axis 4	Execution prohibition flag	OFF: Not during execution prohibition ON: During execution prohibition	• If the execution prohibition flag is ON when the positioning start signal turns ON, positioning control does not start until the execution prohibition flag turns OFF. Used with the "Pre-reading start function". (Refer to Section 13.7.7.)

(2) QD77MS16

Device No.	Signal name			Details
Y0	PLC READY		OFF: PLC READY OFF ON: PLC READY ON	(a) This signal notifies the Simple Motion module that the PLC CPU is normal. • It is turned ON/OFF with the sequence program. • This signal is turned ON during positioning control, HPR control, JOG operation, inching operation, manual pulse generator operation and speed-torque control ,etc. unless the system is in the GX Works2 test function. (b) When the data (parameter etc.) are changed, the PLC READY signal is turned OFF depending on the parameter (Refer to Chapter 7.). (c) The following processes are carried out when this signal turns from OFF to ON. • The parameter setting range is checked. • The READY signal [X0] turns ON. (d) The following processes are carried out when this signal turns from ON to OFF. In these cases, the OFF time should be set to 100ms or more. • The READY signal [X0] turns OFF. • The operating axis stops. • The M code ON signal ([Md.31] Status: b12) for each axis turns OFF, and "0" is stored in "[Md.25] Valid M code". (e) When parameters or positioning data (No. 1 to 600) are written from the GX Works2 or PLC CPU to the flash ROM, this signal will turn OFF.
Y1	All axis servo ON		OFF: Servo OFF ON: Servo ON	• All the servo amplifiers connected to the Simple Motion module are set to servo ON or servo OFF.
Y10 Y11 Y12 Y13 Y14 Y15 Y16 Y17 Y18 Y19 Y1A Y1B Y1C Y1D Y1E Y1F	Axis 1 Axis 2 Axis 3 Axis 4 Axis 5 Axis 6 Axis 7 Axis 8 Axis 9 Axis 10 Axis 11 Axis 12 Axis 13 Axis 14 Axis 15 Axis 16	Positioning start	OFF: Positioning start not requested ON: Positioning start requested	• HPR operation or positioning operation is started. • The positioning start signal is valid at the rising edge, and the operation is started. • When this signal turns ON during BUSY, the warning "Start during operation" (warning code: 100) will occur.

3.4 Specifications of interfaces with external devices

3.4.1 Electrical specifications of input signals

(1) External input signals

(a) Specifications of external input signals

Item		Specifications	
Signal name		Upper limit signal Lower limit signal STOP signal	Proximity dog signal External command signal/ Switching signal
Number of input points		4 points each	
Input method		Positive common/Negative common shared	
Common terminal arrangement		4 points/common (Common contact: COM)	
Isolation method		Photocoupler	
Rated input voltage		24VDC	
Rated input current (I_{IN})		Approx. 5mA	
Operating voltage range		19.2 to 26.4VDC (24VDC+10/-20%, ripple ratio 5% or less)	
ON voltage/current		17.5VDC or more/3.5mA or more	
OFF voltage/current		7VDC or less/1mA or less	
Input resistance		Approx. 6.8kΩ	
Response time	OFF to ON	4ms or less	1ms or less
	ON to OFF		

(2) Forced stop input

(a) Specifications of forced stop input signal

Item		Specifications
Number of input points		1 point
Input method		Positive common/Negative common shared
Common terminal arrangement		1 point/common (Common contact: EMI.COM)
Isolation method		Photocoupler
Rated input voltage		24VDC
Rated input current (I_{IN})		Approx. 5mA
Operating voltage range		19.2 to 26.4VDC (24VDC+10/ -20%, ripple ratio 5% or less)
ON voltage/current		17.5VDC or more/3.5mA or more
OFF voltage/current		7VDC or less/1mA or less
Input resistance		Approx. 6.8kΩ
Response time	OFF to ON	4ms or less
	ON to OFF	

(3) Manual pulse generator/Incremental synchronous encoder input

(a) Specifications of manual pulse generator/incremental synchronous encoder

Item		Specifications
Signal input form (Note-1)		A-phase/ B-phase (Magnification by 4/ Magnification by 2/Magnification by 1), PLS/SIGN
Differential-output type (26LS31 or equivalent)	Maximum input pulse frequency	1Mpps (After magnification by 4, up to 4Mpps) (Note-2)
	Pulse width	1μs or more
	Leading edge/trailing edge time	0.25μs or less
	Phase difference	0.25μs or more
	Rated input voltage	5.5 V DC or less
	High-voltage	2.0 to 5.25 V DC
	Low-voltage	0 to 0.8 V DC
	Differential voltage	±0.2V
	Cable length	Up to 30m (98.43ft.)
	Example of waveform	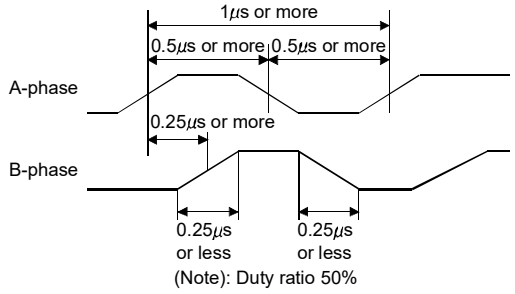 (Note): Duty ratio 50%
Voltage-output type/Open-collector type (5 V DC)	Maximum input pulse frequency	200kpps (After magnification by 4, up to 800kpps) (Note-2)
	Pulse width	5μs or more
	Leading edge/trailing edge time	1.2μs or less
	Phase difference	1.2μs or more
	Rated input voltage	5.5 V DC or less
	High-voltage	3.0 to 5.25 V DC/2 mA or less
	Low-voltage	0 to 1.0 V DC/5 mA or more
	Cable length	Up to 10m (32.81ft.)
	Example of waveform	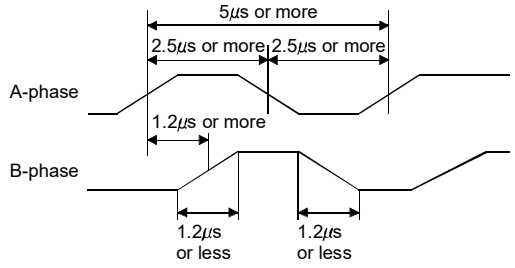 (Note): Duty ratio 50%

(Note-1): Set the signal input form in "[Pr.24] Manual pulse generator/Incremental synchronous encoder input selection".

[Pr.24] Manual pulse generator/Incremental synchronous encoder input selection	[Pr.22] Input signal logic selection			
	Positive logic		Negative logic	
	Forward run	Reverse run	Forward run	Reverse run
A-phase/ B-phase	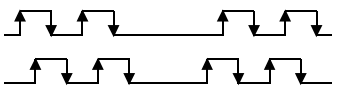		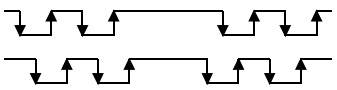	
PLS/SIGN	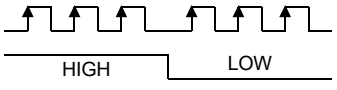		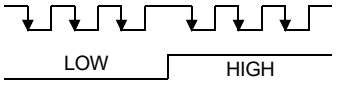	

(Note-2): Maximum input pulse frequency is magnified by 4, when "A-phase/B-phase Magnification by 4" is set in "[Pr.24] Manual pulse generator/Incremental synchronous encoder input selection".

3.4.2 Signal layout for external input connection connector

The specifications of the connector section, which is the input/output interface for the Simple Motion module and external device, are shown below.

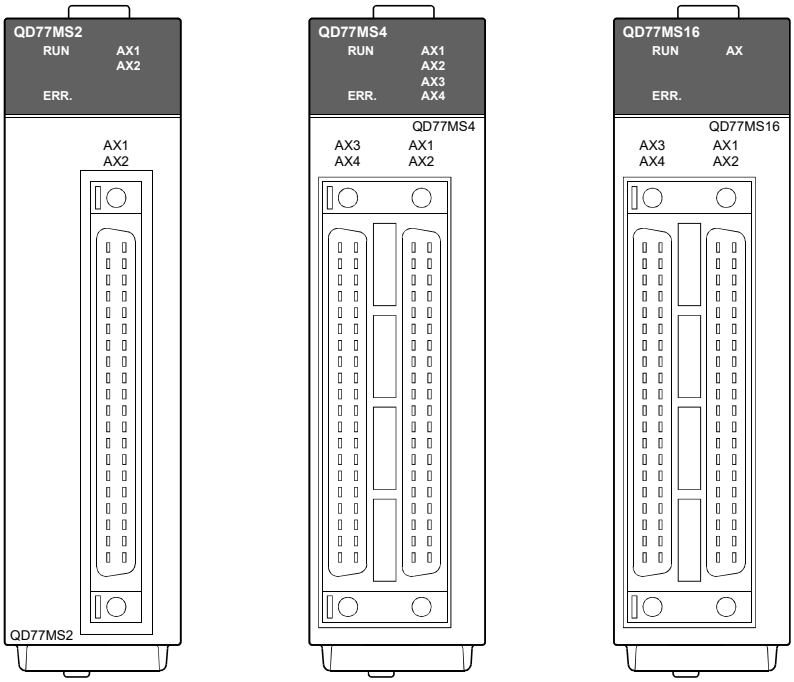

The signal layout for the external input connection connector of Simple Motion module is shown.

Pin layout	AX4 (Note-2)		AX3 (Note-2)		AX2		AX1	
	Axis 4 (External input signal 4)		Axis 3 (External input signal 3)		Axis 2 (External input signal 2)		Axis 1 (External input signal 1)	
	Pin No. (Note-1)	Signal name	Pin No. (Note-1)	Signal name	Pin No. (Note-1)	Signal name	Pin No. (Note-1)	Signal name
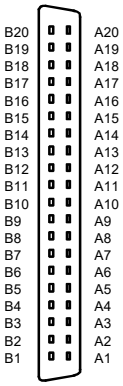 Front view of the module	2B20		2A20		1B20	HB (Note-3), (Note-4), (Note-5)	1A20	5V (Note-9)
	2B19		2A19		1B19	HA (Note-3), (Note-4), (Note-5)	1A19	5V (Note-9)
	2B18		2A18		1B18	HBL (Note-3), (Note-4), (Note-6)	1A18	HBH (Note-3), (Note-4), (Note-6)
	2B17		2A17		1B17	HAL (Note-3), (Note-4), (Note-6)	1A17	HAH (Note-3), (Note-4), (Note-6)
	2B16	No connect (Note-7)	2A16	No connect (Note-7)	1B16	No connect (Note-7)	1A16	No connect (Note-7)
	2B15		2A15		1B15	5V (Note-9)	1A15	5V (Note-9)
	2B14		2A14		1B14	SG (Note-9)	1A14	SG (Note-9)
	2B13		2A13		1B13	No connect (Note-7)	1A13	No connect (Note-7)
	2B12		2A12		1B12		1A12	
	2B11		2A11		1B11		1A11	
	2B10		2A10		1B10		1A10	
	2B9		2A9		1B9		1A9	
	2B8				1B8	EMI. COM	1A8	EMI
	2B7	COM	2A7	COM	1B7	COM	1A7	COM
	2B6	COM	2A6	COM	1B6	COM	1A6	COM
	2B5	DI4 (Note-8)	2A5	DI3 (Note-8)	1B5	DI2 (Note-8)	1A5	DI1 (Note-8)
	2B4	STOP (Note-8)	2A4	STOP (Note-8)	1B4	STOP (Note-8)	1A4	STOP (Note-8)
	2B3	DOG (Note-8)	2A3	DOG (Note-8)	1B3	DOG (Note-8)	1A3	DOG (Note-8)
	2B2	RLS (Note-8)	2A2	RLS (Note-8)	1B2	RLS (Note-8)	1A2	RLS (Note-8)
	2B1	FLS (Note-8)	2A1	FLS (Note-8)	1B1	FLS (Note-8)	1A1	FLS (Note-8)

(Note-1) : Pin No. "1_ _ _" indicates the pin No. for the right connector. Pin No. "2_ _ _" indicates the pin No. for the left connector.

(Note-2) : QD77MS2 does not have Pin No. of AX3 and AX4 of the left side.

(Note-3) : Input type from manual pulse generator/incremental synchronous encoder is switched in "[Pr.89] Manual pulse generator/Incremental synchronous encoder input type selection". (Only the value specified against the axis 1 is valid.)
- 0: Differential-output type
- 1: Voltage-output/open-collector type (Default value)

(Note-4) : Set the signal input form in "[Pr.24] Manual pulse generator/Incremental synchronous encoder input selection".

(Note-5) : Voltage-output/open-collector type
Connect the A-phase/PLS signal to HA, and the B-phase/SIGN signal to HB.

(Note-6) : Differential-output type
Connect the A-phase/PLS signal to HAH, and the A-phase/PLS inverse signal to HAL.
Connect the B-phase/SIGN signal to HBH, and the B-phase/SIGN inverse signal to HBL.

(Note-7) : Do not connect to any of the terminal explained as "No connect".

(Note-8) : Set the external command signal [DI, FLS, RLS, DOG, STOP] in "[Pr.80] External input signal selection" and "[Pr.95] External command signal selection" at QD77MS16 use.

(Note-9) : Do not use 1A20, 1A19, 1A(B)15, and 1A(B)14 for other than the power supply of the manual pulse generator.

3.4.3 List of input signal details

The details of each external input connection connector of Simple Motion module are shown below.

<table>
<tr><th colspan="3">Signal name</th><th>Pin No.</th><th>Signal details</th></tr>
<tr><td rowspan="5">Differential-output type</td><td rowspan="2">Manual pulse generator/Incremental synchronous encoder A-phase/PLS</td><td>HAH (A+)</td><td>1A17</td><td rowspan="5">(1) A-phase/B-phase
• Input the pulse signal from the manual pulse generator/incremental synchronous encoder A-phase and B-phase.
• If the A-phase leads the B-phase, the positioning address will increase at the rising and falling edges of each phase.
• If the B-phase leads the A-phase, the positioning address will decrease at the rising and falling edges of each phase.
(a) Magnification by 4
 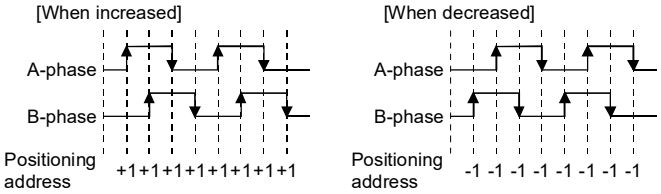

(b) Magnification by 2
 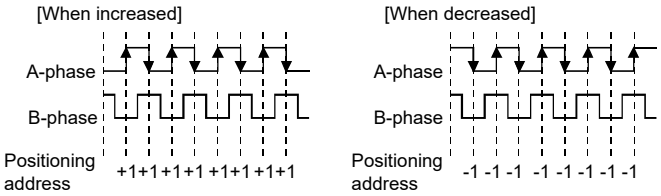

(c) Magnification by 1
1) Positive logic
 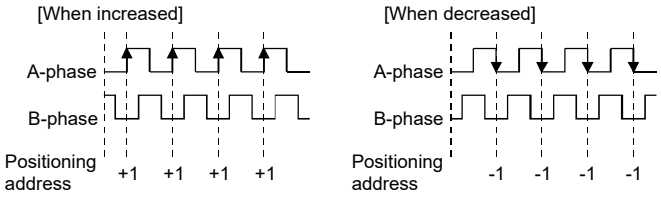

2) Negative logic
 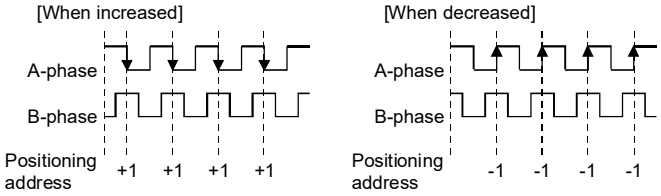
</td></tr>
<tr><td>HAL (A-)</td><td>1B17</td></tr>
<tr><td rowspan="2">Manual pulse generator/Incremental synchronous encoder B-phase/SIGN</td><td>HBH (B+)</td><td>1A18</td></tr>
<tr><td>HBL (B-)</td><td>1B18</td></tr>
<tr><td rowspan="2">Voltage-output type/ open-collector type</td><td>Manual pulse generator/Incremental synchronous encoder A-phase/PLS</td><td>HA (A)</td><td>1B19</td></tr>
<tr><td>Manual pulse generator/Incremental synchronous encoder B-phase/SIGN</td><td>HB (B)</td><td>1B20</td></tr>
</table>

<table>
<tr><th colspan="3">Signal name</th><th>Pin No.</th><th>Signal details</th></tr>
<tr><td rowspan="4">Differential-output type</td><td rowspan="2">Manual pulse generator/Incremental synchronous encoder A-phase/PLS</td><td>HAH (A+)</td><td>1A17</td><td rowspan="4">(2) PLS/SIGN
Input the pulse signal for counting the increased/decreased pulse in the pulse input (PLS). Input the signal for controlling forward run and reverse run in the direction sign (SIGN).
1) "[Pr.22] Input signal logic selection" is positive logic
• The motor will forward run when the direction sign is HIGH.
• The motor will reverse run when the direction sign is LOW.
2) "[Pr.22] Input signal logic selection" is negative logic
• The motor will forward run when the direction sign is LOW.
• The motor will reverse run when the direction sign is HIGH.
 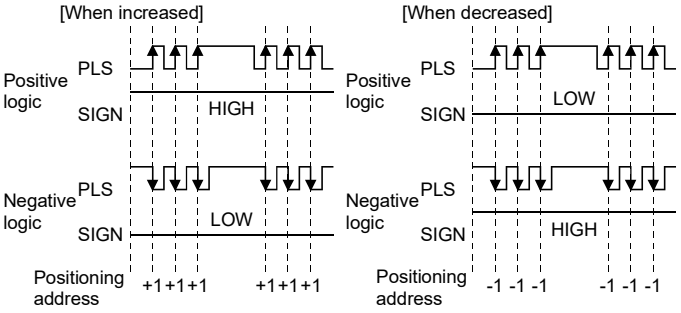
</td></tr>
<tr><td>HAL (A-)</td><td>1B17</td></tr>
<tr><td rowspan="2">Manual pulse generator/Incremental synchronous encoder B-phase/SIGN</td><td>HBH (B+)</td><td>1A18</td></tr>
<tr><td>HBL (B-)</td><td>1B18</td></tr>
<tr><td rowspan="2">Voltage-output type/ open-collector type</td><td>Manual pulse generator/Incremental synchronous encoder A-phase/PLS</td><td>HA (A)</td><td>1B19</td></tr>
<tr><td>Manual pulse generator/Incremental synchronous encoder B-phase/SIGN</td><td>HB (B)</td><td>1B20</td></tr>
</table>

Signal name		Pin No. (Note-1)	Signal details
Manual pulse generator power supply output (+ 5VDC) (5V)		1A20 1A19	• Power supply for manual pulse generator MR-HDP01. (+ 5VDC) (This power supply is used with the external input signal cable of QD75MH.) (Note): Do not connect wires other than the signal wires of the manual pulse generator.
Upper limit signal (FLS)		1A1 1B1 2A1 2B1	• This signal is input from the limit switch installed at the upper limit position of the stroke. • Positioning will stop when this signal turns OFF. • When HPR retry function is valid, this will be the upper limit for finding the proximity dog signal.
Lower limit signal (RLS)		1A2 1B2 2A2 2B2	• This signal is input from the limit switch installed at the lower limit position of the stroke. • Positioning will stop when this signal turns OFF. • When HPR retry function is valid, this will be the lower limit for finding the proximity dog signal.
Proximity dog signal (DOG)		1A3 1B3 2A3 2B3	• This signal is used for detecting the proximity dog during HPR. • The proximity dog OFF → ON is detected at the rising edge. • The proximity dog ON → OFF is detected at the falling edge.
Stop signal (STOP)		1A4 1B4 2A4 2B4	• Input this signal to stop positioning. • When this signal turns ON, the QD77MS will stop the positioning being executed. After that, even if this signal is turned from ON to OFF, the system will not start.
External command/ Switching signal	(DI1)	1A5	• Input a control switching signal during speed-position or position-speed switching control. • Use this signal as the input signal of positioning start, speed change request, skip request and mark detection from an external device. Set the function to use this signal in "[Pr.42] External command function selection". (Note): Set the signal in "[Pr.95] External command signal selection" at QD77MS16 use.
	(DI2)	1B5	
	(DI3)	2A5	
	(DI4)	2B5	
Common (COM)		1A6 1A7 1B6 1B7 2A6 2A7 2B6 2B7	• Common for upper/lower limit, proximity dog, stop, and external command /switching signals.
Forced stop input signal (EMI)		1A8	• This signal is input when batch forced stop is available for all axes of servo amplifier. EMI ON (Opened) : Forced stop EMI OFF (24VDC input) : Forced stop release
Forced stop input signal common (EMI.COM)		1B8	
Manual pulse generator power supply output (+ 5VDC) (5V)		1A15 1B15	• Power supply for manual pulse generator. (+ 5VDC) (Note): This power supply is used for manual pulse generator. It must not be used except for the manual pulse generator power supply.
Manual pulse generator power supply output (GND) (SG)		1A14 1B14	• Power supply for manual pulse generator. (GND) (Note): This power supply is used for manual pulse generator. It must not be used except for the manual pulse generator power supply.

(Note-1): QD77MS2 does not have Pin No. of AX3 and AX4 of the left side.

3.4.4 Interface internal circuit

The outline diagrams of the internal circuits for the external device connection interface (for the Simple Motion module, axis 1) are shown below.

(1) Interface between external input signals/forced stop input signals

Input or Output	Signal name		Pin No.	Wiring example	Internal circuit	Description
Input	Upper-limit signal (Note-1)	FLS	_ _1 (Note-2)	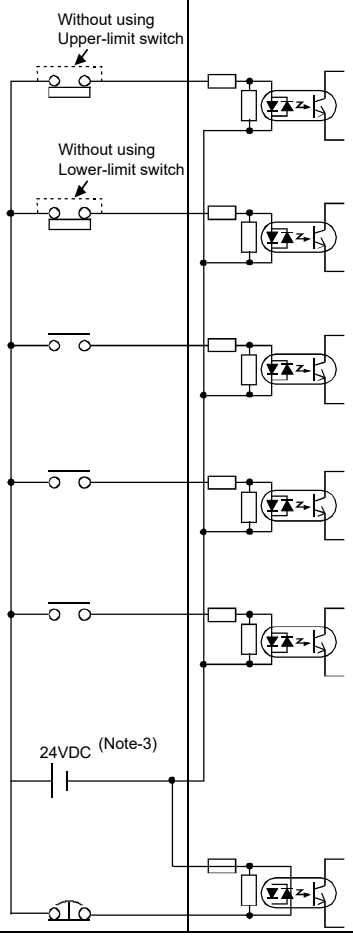		Upper-limit signal, Lower-limit signal, Proximity dog signal, Stop signal, External command signal, Switching signal, Forced stop input signal
	Lower-limit signal (Note-1)	RLS	_ _2 (Note-2)			
	Proximity dog signal (Note-1)	DOG	_ _3 (Note-2)			
	Stop signal	STOP	_ _4 (Note-2)			
	External command/ Switching	DI	_ _5 (Note-2)			
	Common	COM	_ _6 (Note-2) _ _7 (Note-2)			
	Forced stop input signal	EMI	1A8			
		EMI.COM	1B8			

(Note-1): When using external input signal of servo amplifier, set "1" with " Pr.80 External signal selection". In addition, refer to Section 13.4.4 for wiring of upper/lower limit signal and Section 8.1.1 for wiring of proximity dog signal.
(Note-2): "_ _" indicates "1A (AX1)", "1B (AX2)", 2A (AX3)", or "2B (AX4)".
(Note-3): As for the 24 V DC polarity, both "+" and "-" are possible.

(2) Manual pulse generator/Incremental synchronous encoder input

(a) Interface between manual pulse generator/incremental synchronous encoder (Differential-output type)

<table>
<tr><th rowspan="2">Input or Output</th><th colspan="2" rowspan="2">Signal name</th><th rowspan="2">Pin No.</th><th colspan="2">When using the external power supply (Recommended)</th><th colspan="2">When using the internal power supply</th></tr>
<tr><th>Wiring example</th><th>Internal circuit</th><th>Wiring example</th><th>Internal circuit</th></tr>
<tr><td rowspan="4">Input
(Note-1), (Note-2)</td><td rowspan="2">Manual pulse generator, A-phase/ PLS</td><td>HAH (A+)</td><td>1A17</td><td rowspan="4"> 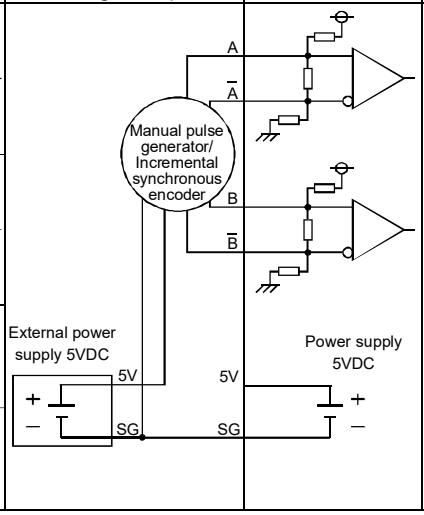
</td><td rowspan="4"> 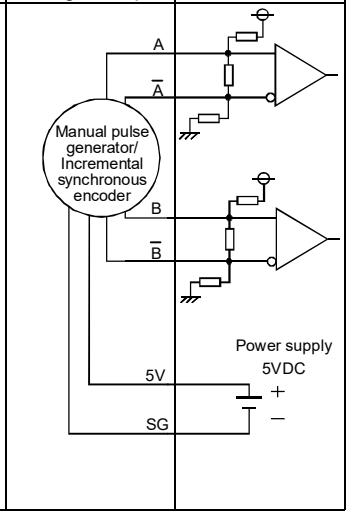
</td></tr>
<tr><td>HAL (A-)</td><td>1B17</td></tr>
<tr><td rowspan="2">Manual pulse generator, B-phase/ SIGN</td><td>HBH (B+)</td><td>1A18</td></tr>
<tr><td>HBL (B-)</td><td>1B18</td></tr>
<tr><td rowspan="2">Power supply</td><td colspan="2">5V(Note-3)</td><td>1A15
1B15</td></tr>
<tr><td colspan="2">SG(Note-4)</td><td>1A14
1B14</td></tr>
</table>

(Note-1): Set "0: Differential-output type" in "Pr.89 Manual pulse generator/Incremental synchronous encoder input type selection" if the manual pulse generator/Incremental synchronous encoder of differential-output type is used. The default value is "1: Voltage-output/open-collector type".

(Note-2): Set the signal input form in "Pr.24 Manual pulse generator/Incremental synchronous encoder input selection".

(Note-3): The 5VDC power supply from the Simple Motion module must not be used if a separate power supply is applied to the manual pulse generator/incremental synchronous encoder. If a separate power supply is used, use a stabilized power supply of voltage 5VDC. Anything else may cause a failure.

(Note-4): Be sure to connect the 0 V (-) of the manual pulse generator/incremental synchronous encoder and the SG of the Simple Motion module.

(b) Interface between manual pulse generator/Incremental synchronous encoder (Voltage-output type/open-collector type)

Input or Output	Signal name		Pin No.	When using the external power supply (Recommended)		When using the internal power supply	
				Wiring example	Internal circuit	Wiring example	Internal circuit
Input (Note-1), (Note-2)	Manual pulse generator, A-phase/ PLS	HA (A)	1B19	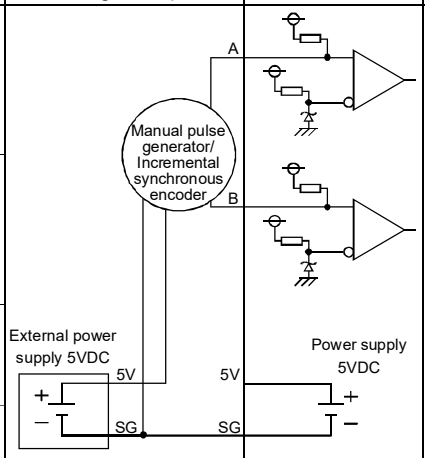		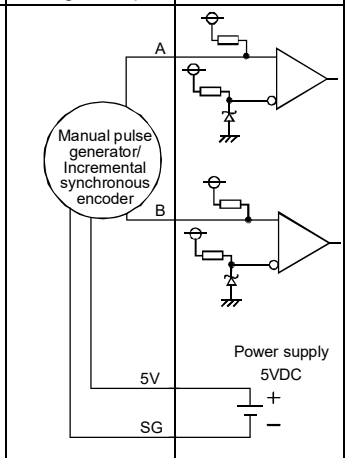	
	Manual pulse generator, B-phase/ SIGN	HB (B)	1B20				
Power supply	5V(Note-3)		1A15 1B15				
	SG(Note-4)		1A14 1B14				

(Note-1): Set "1: Voltage-output/open-collector type" in " Pr.89 Manual pulse generator/Incremental synchronous encoder input type selection" if the manual pulse generator/Incremental synchronous encoder of voltage-output/open-collector type is used.
The default value is "1: Voltage-output/open-collector type".
(Note-2): Set the signal input form in " Pr.24 Manual pulse generator/Incremental synchronous encoder input selection".
(Note-3): The 5VDC power supply from the Simple Motion module must not be used if a separate power supply is applied to the manual pulse generator/Incremental synchronous encoder.
If a separate power supply is used, use a stabilized power supply of voltage 5VDC.
Anything else may cause a failure.
(Note-4): Be sure to connect the 0 V (-) of the manual pulse generator/incremental synchronous encoder and the SG of the Simple Motion module.

(3) Wiring example for manual pulse generator/incremental synchronous encoder

Wire the manual pulse generator/incremental synchronous encoder of the differential output type and voltage output type/open-collector type as follows. Switch the input type of the Simple Motion module by "[Pr.89] Manual pulse generator/Incremental synchronous encoder input type selection". It is recommended to use the external 5 V power supply (5 V DC±5%) for the power supply of the manual pulse generator/incremental synchronous encoder. When using the external power supply, do not connect with the 5 V terminal of the Simple Motion module. When using the internal power supply, connect the 5 V terminal of the Simple Motion module and the 5 V (+) of the manual pulse generator/ incremental synchronous encoder.
In either case, connect the 0 V (-) of the manual pulse generator/incremental synchronous encoder and the SG of the Simple Motion module. Do not use the 5 V terminal of the Simple Motion module except for connecting the manual pulse generator/incremental synchronous encoder. It may cause a failure. Also, do not connect the manual pulse generator/incremental synchronous encoder whose current consumption exceeds 200 mA.

(a) Manual pulse generator/Incremental synchronous encoder of differential output type

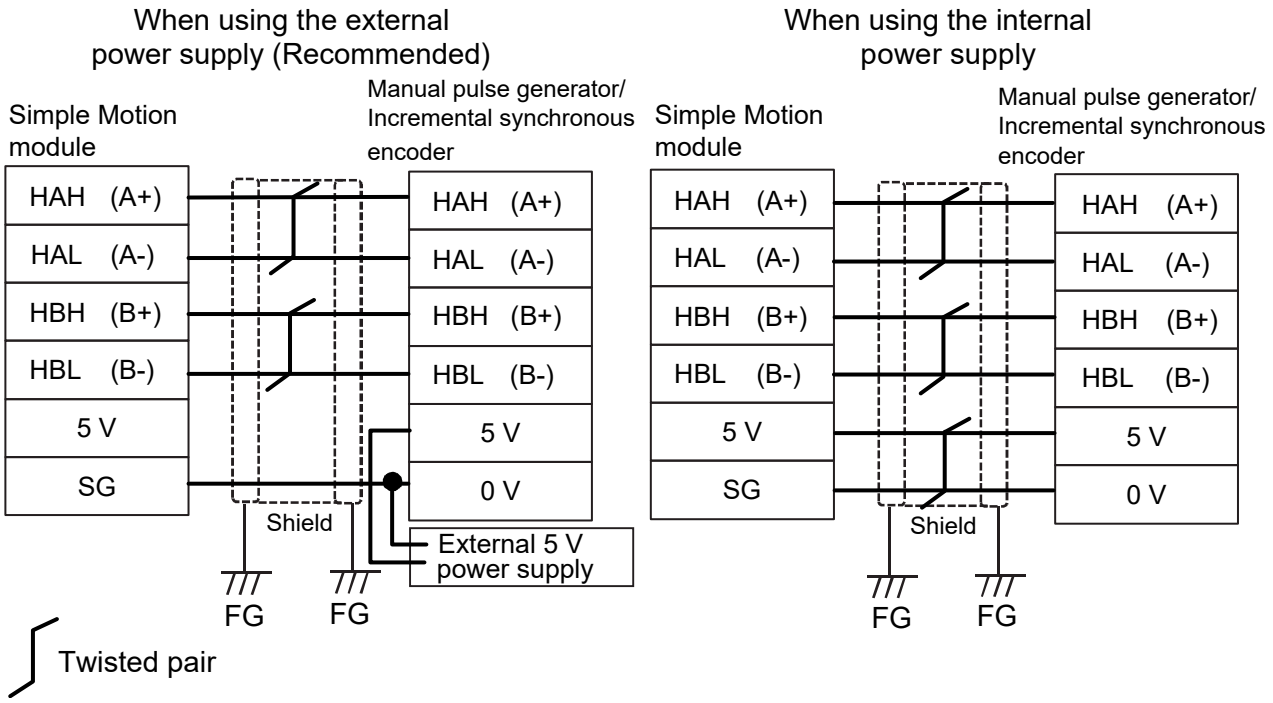

(b) Manual pulse generator/Incremental synchronous encoder of voltage output type/open-collector type

When using the external power supply (Recommended)

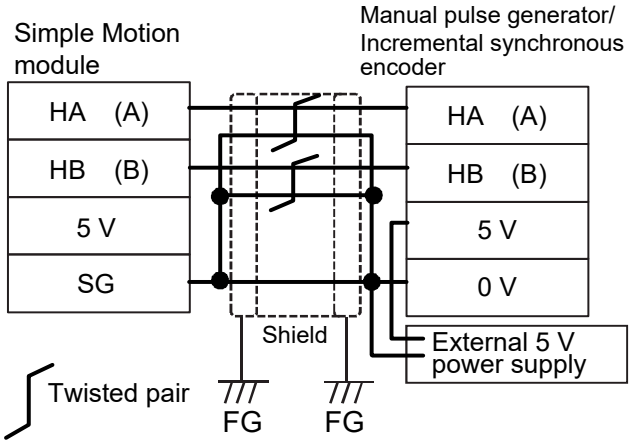

When using the internal power supply

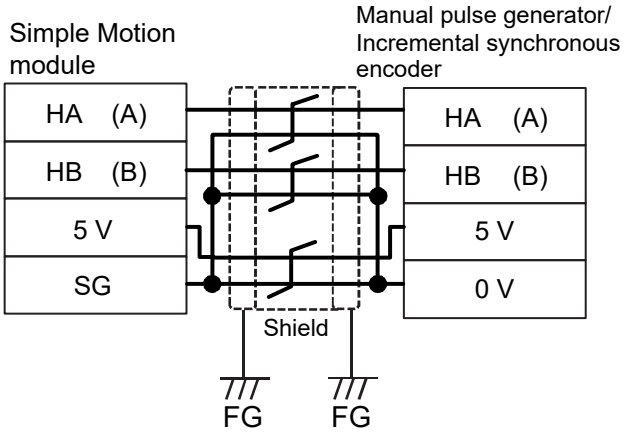

MEMO

3.5 External circuit design

Configure up the power supply circuit and main circuit which turn off the power supply after detection alarm occurrence and servo forced stop. When designing the main circuit of the power supply, make sure to use a circuit breaker (MCCB).
The outline diagrams for the external device connection interface are shown below.

(1) Example when using the forced stop of the QD77MS (For MR-J4-B)

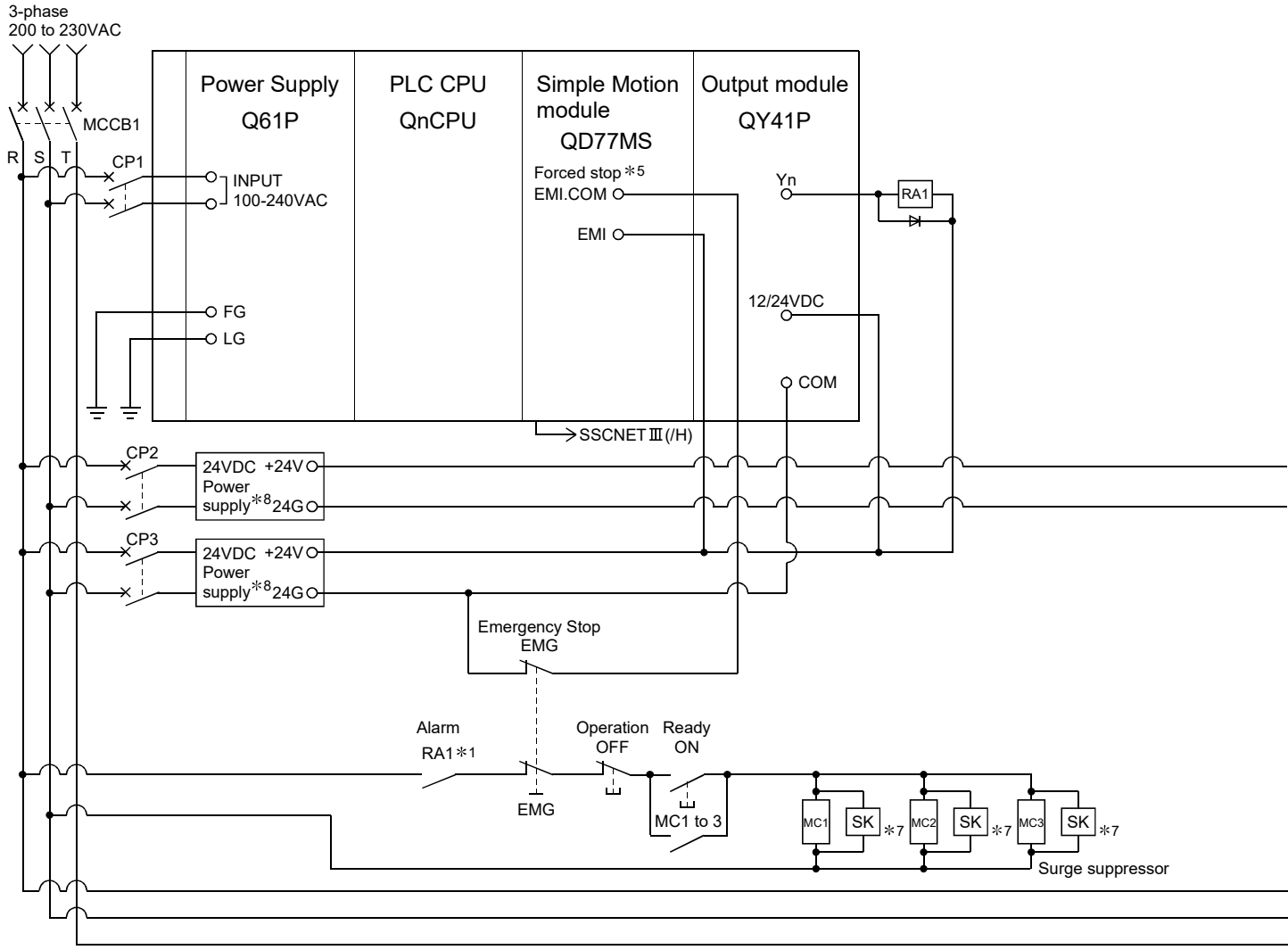

POINT

(1) ∗1: Configure up the power supply circuit which switch off the electromagnetic contactor (MC) after detection alarm occurrence on the PLC CPU.
(2) ∗2: It is also possible to use a full wave rectified power supply as the power supply for the electromagnetic brake.
(3) ∗3: It is also possible to perform the forced stop using forced stop terminal of the servo amplifier.
(4) ∗4: Set the axis selection rotary switch of servo amplifier as follows to set the axis No. of servo amplifier.
- Axis 1: 0 • Axis 5: 4 • Axis 9: 8 • Axis 13: C
- Axis 2: 1 • Axis 6: 5 • Axis 10: 9 • Axis 14: D
- Axis 3: 2 • Axis 7: 6 • Axis 11: A • Axis 15: E
- Axis 4: 3 • Axis 8: 7 • Axis 12: B • Axis 16: F

(5) ∗5: The status of forced stop input signal can be confirmed with "[Md.50] Forced stop input". Be sure that the forced stop 24 V DC power supply is not used with the electromagnetic brake of the motor or the electromagnetic valve power supply.
(6) ∗6: Refer to the servo amplifier instruction manual for selection of the circuit breaker and electromagnetic contactor.
(7) ∗7: The surge suppressor is recommended to be used for an AC relay or electromagnetic contactor (MC) near the servo amplifier. Refer to the servo amplifier instruction manual for selection of the surge suppressor.
(8) ∗8: Wire the electromagnetic brake power supply and the control power supply using a separate power supply.

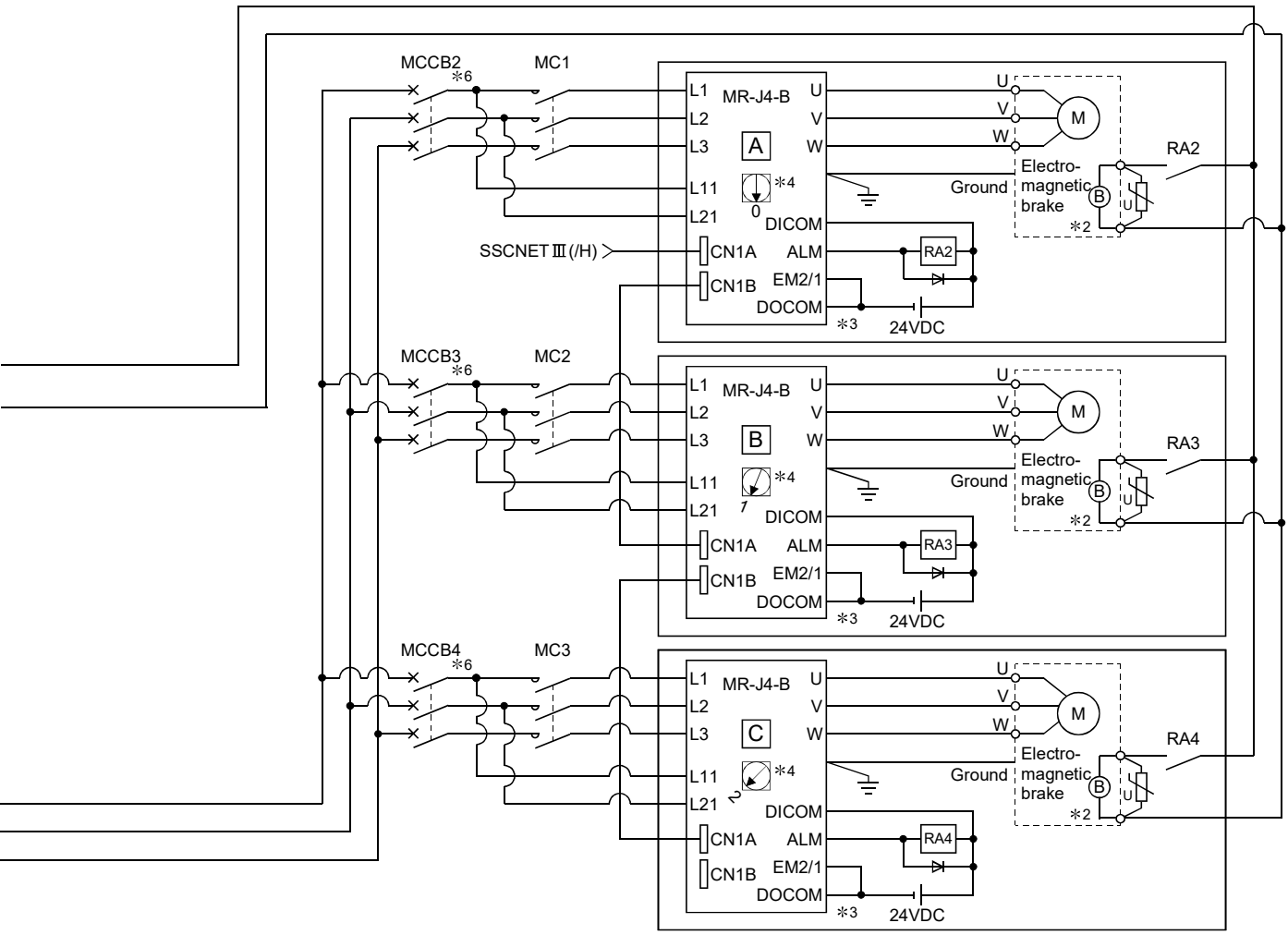

(Note-1): When the control power supply of servo amplifier is shut off, it is not possible to communicate with the servo amplifier after that.
Example) When the control power supply L11/L21 of the servo amplifier [B] in the above figure is shut off, it is also not possible to communicate with the servo amplifier [C].
If only a specific servo amplifier main circuit power supply is shut off, be sure to shut off the main circuit power supply L1/L2/L3, and do not shut off the control power supply L11/L21.

(Note-2): Be sure to shut off the both of main circuit power supply L1/L2/L3 and control power supply L11/L21 after disconnection of SSCNET communication by the connect/disconnect function of SSCNET communication at the time of exchange of servo amplifier. At this time, it is not possible to communicate between the servo amplifier and Simple Motion module. Therefore, be sure to exchange the servo amplifier after stopping the operating of machine beforehand.

(Note-3): If the emergency stop signal of the Simple Motion module turns OFF when setting "[Pr.82] Forced stop valid/invalid selection" to "0: Valid (External input signal)", servomotor is stopped by dynamic brake. (The LED display of servo amplifier indicates "E7.1" (Controller forced stop input warning).)

MEMO

(2) Example when using the forced stop of the QD77MS (For MR-JE-B)

Important

- The hot line forced stop function is enabled at the MR-JE-B factory-set. (Only MR-JE-B)
- This function is used to execute deceleration stop for all axes by outputting the hot line forced stop signal to all axes and generating "E7.1" (Controller forced stop input warning) at the alarm occurrence.
- This function can be disabled by the servo parameter (PA27).
- For using the MR-JE-B, configure up the power supply circuit which switches off the all axes electromagnetic contactor (MC) from the CPU module after detecting the alarm occurrence on the CPU module.

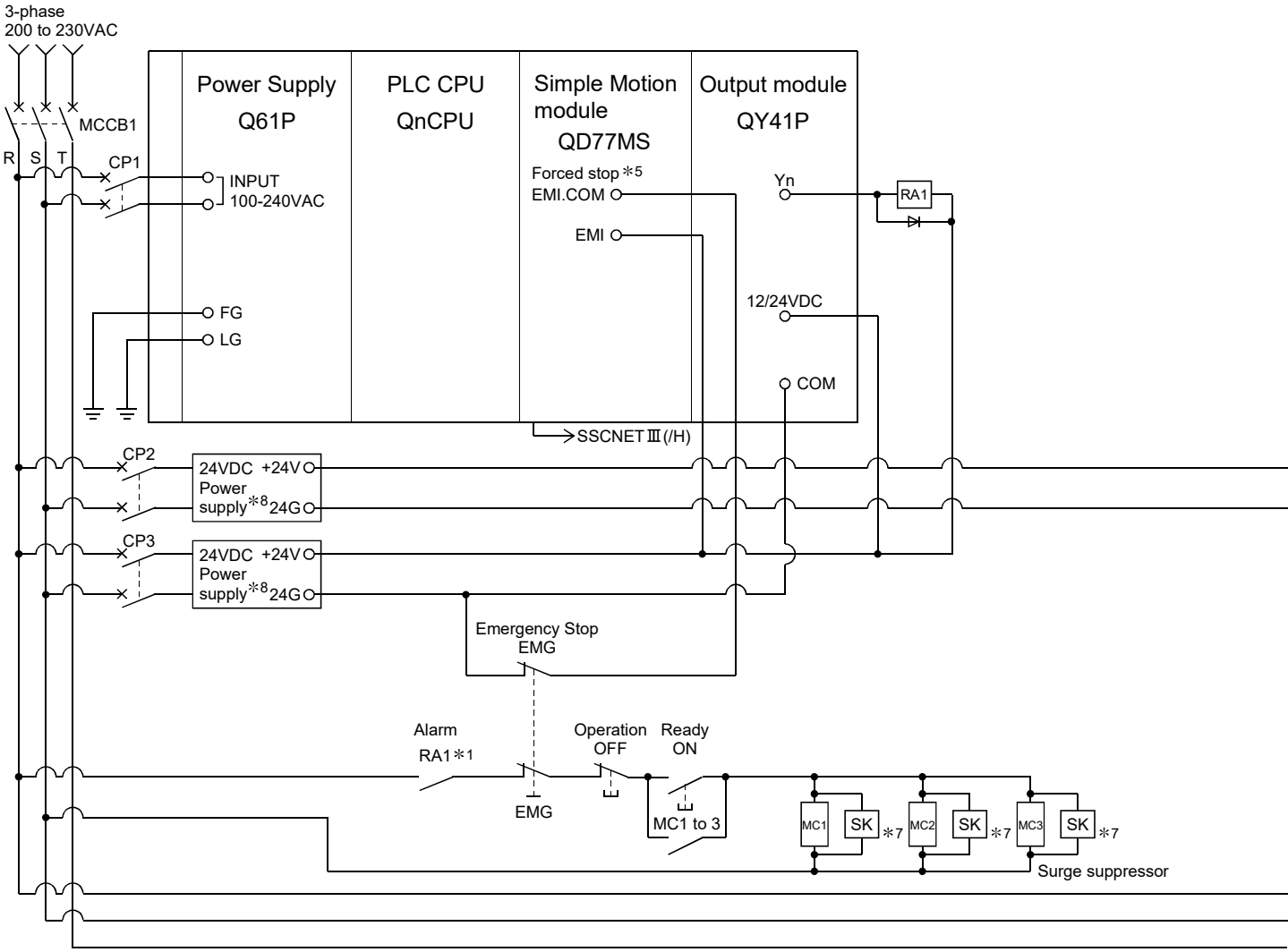

POINT

(1) ＊1: Configure up the power supply circuit which switch off the electromagnetic contactor (MC) after detection alarm occurrence on the PLC CPU.
(2) ＊2: It is also possible to use a full wave rectified power supply as the power supply for the electromagnetic brake.
(3) ＊3: It is also possible to perform the forced stop using forced stop terminal of the servo amplifier.
(4) ＊4: Set the axis selection rotary switch of servo amplifier as follows to set the axis No. of servo amplifier.
- Axis 1: 0 • Axis 5: 4 • Axis 9: 8 • Axis 13: C
- Axis 2: 1 • Axis 6: 5 • Axis 10: 9 • Axis 14: D
- Axis 3: 2 • Axis 7: 6 • Axis 11: A • Axis 15: E
- Axis 4: 3 • Axis 8: 7 • Axis 12: B • Axis 16: F

(5) ＊5: The status of forced stop input signal can be confirmed with "[Md.50] Forced stop input". Be sure that the forced stop 24 V DC power supply is not used with the electromagnetic brake of the motor or the electromagnetic valve power supply.
(6) ＊6: Refer to the servo amplifier instruction manual for selection of the circuit breaker and electromagnetic contactor.
(7) ＊7: The surge suppressor is recommended to be used for an AC relay or electromagnetic contactor (MC) near the servo amplifier. Refer to the servo amplifier instruction manual for selection of the surge suppressor.
(8) ＊8: Wire the electromagnetic brake power supply and the control power supply using a separate power supply.

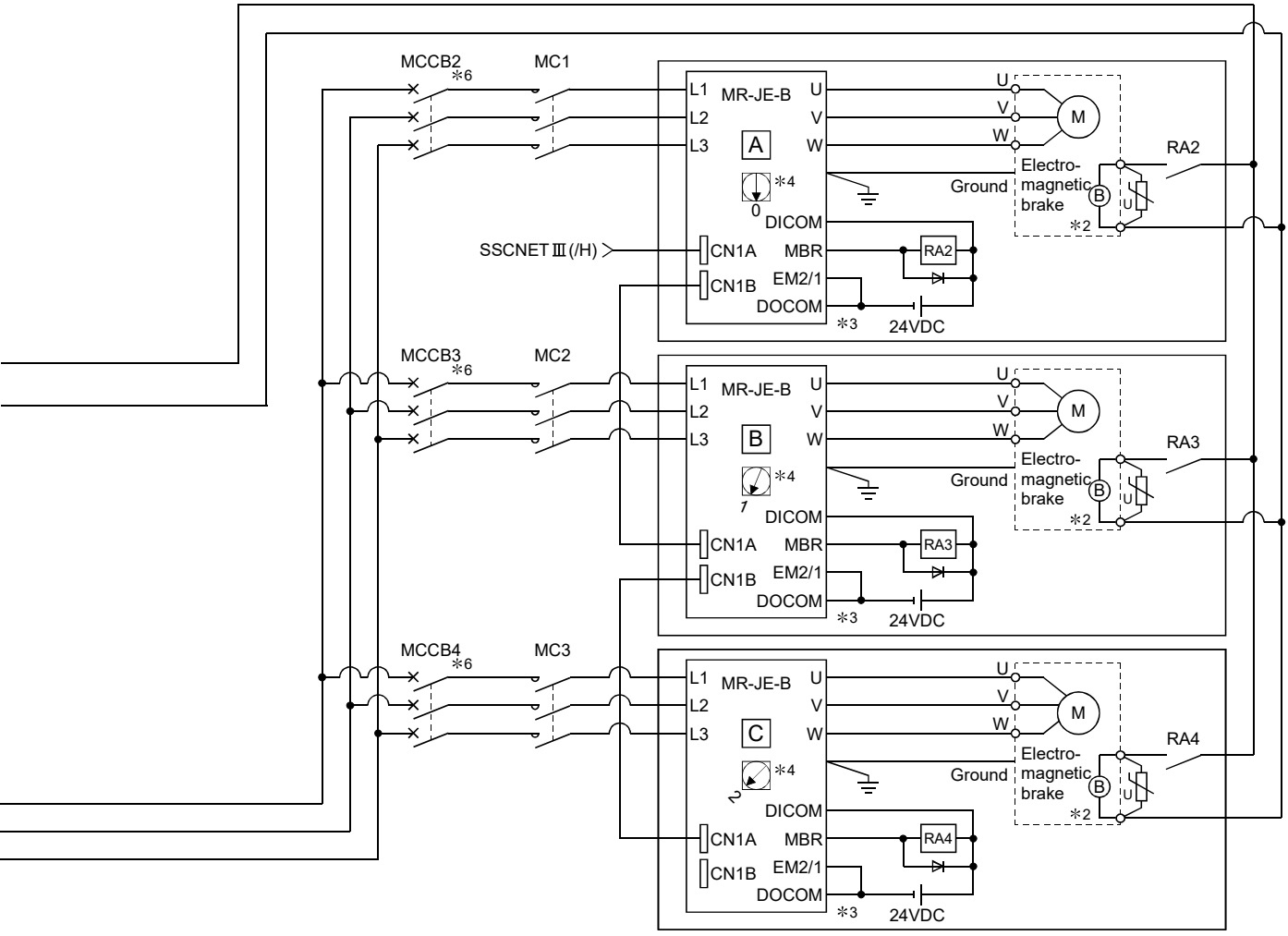

(Note-1): When the power supply of servo amplifier is shut off, it is not possible to communicate with the servo amplifier after that.
Example) When the power supply L1/L2/L3 of the servo amplifier [B] in the above figure is shut off, it is also not possible to communicate with the servo amplifier [C].

(Note-2): Be sure to shut off power supply L1/L2/L3 after disconnection of SSCNET communication by the connect/disconnect function of SSCNET communication at the time of exchange of servo amplifier. At this time, it is not possible to communicate between the servo amplifier and Simple Motion module. Therefore, be sure to exchange the servo amplifier after stopping the operating of machine beforehand.

(Note-3): If the emergency stop signal of the Simple Motion module turns OFF when setting "[Pr.82] Forced stop valid/invalid selection" to "0: Valid (External input signal)", servomotor is stopped by dynamic brake. (The LED display of servo amplifier indicates "E7.1" (Controller forced stop input warning).)

MEMO

(3) Example when using the forced stop of the QD77MS and MR-J4-B

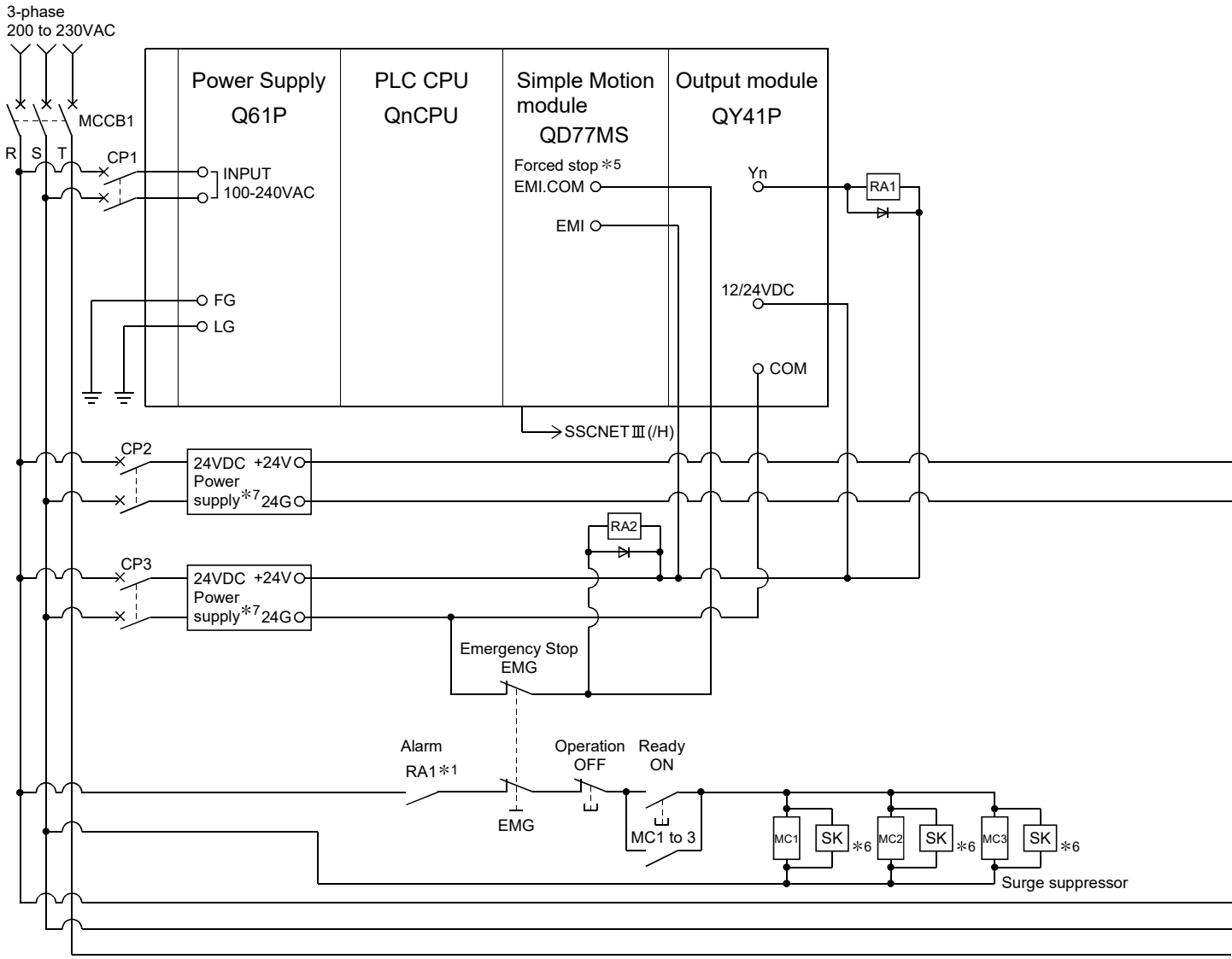

POINT

(1) ∗1: Configure up the power supply circuit which switch off the electromagnetic contactor (MC) after detection alarm occurrence on the PLC CPU.

(2) ∗2: It is also possible to use a full wave rectified power supply as the power supply for the electromagnetic brake.

(3) ∗3: Set the axis selection rotary switch of servo amplifier as follows to set the axis No. of servo amplifier.

- Axis 1: 0
- Axis 2: 1
- Axis 3: 2
- Axis 4: 3
- Axis 5: 4
- Axis 6: 5
- Axis 7: 6
- Axis 8: 7
- Axis 9: 8
- Axis 10: 9
- Axis 11: A
- Axis 12: B
- Axis 13: C
- Axis 14: D
- Axis 15: E
- Axis 16: F

(4) ∗4: Refer to the servo amplifier instruction manual for selection of the circuit breaker and electromagnetic contactor.

(5) ∗5: The status of forced stop input signal can be confirmed with "[Md.50] Forced stop input". Be sure that the forced stop 24 V DC power supply is not used with the electromagnetic brake of the motor or the electromagnetic valve power supply.

(6) ∗6: The surge suppressor is recommended to be used for an AC relay or electromagnetic contactor (MC) near the servo amplifier. Refer to the servo amplifier instruction manual for selection of the surge suppressor.

(7) ∗7: Wire the electromagnetic brake power supply and the control power supply using a separate power supply.

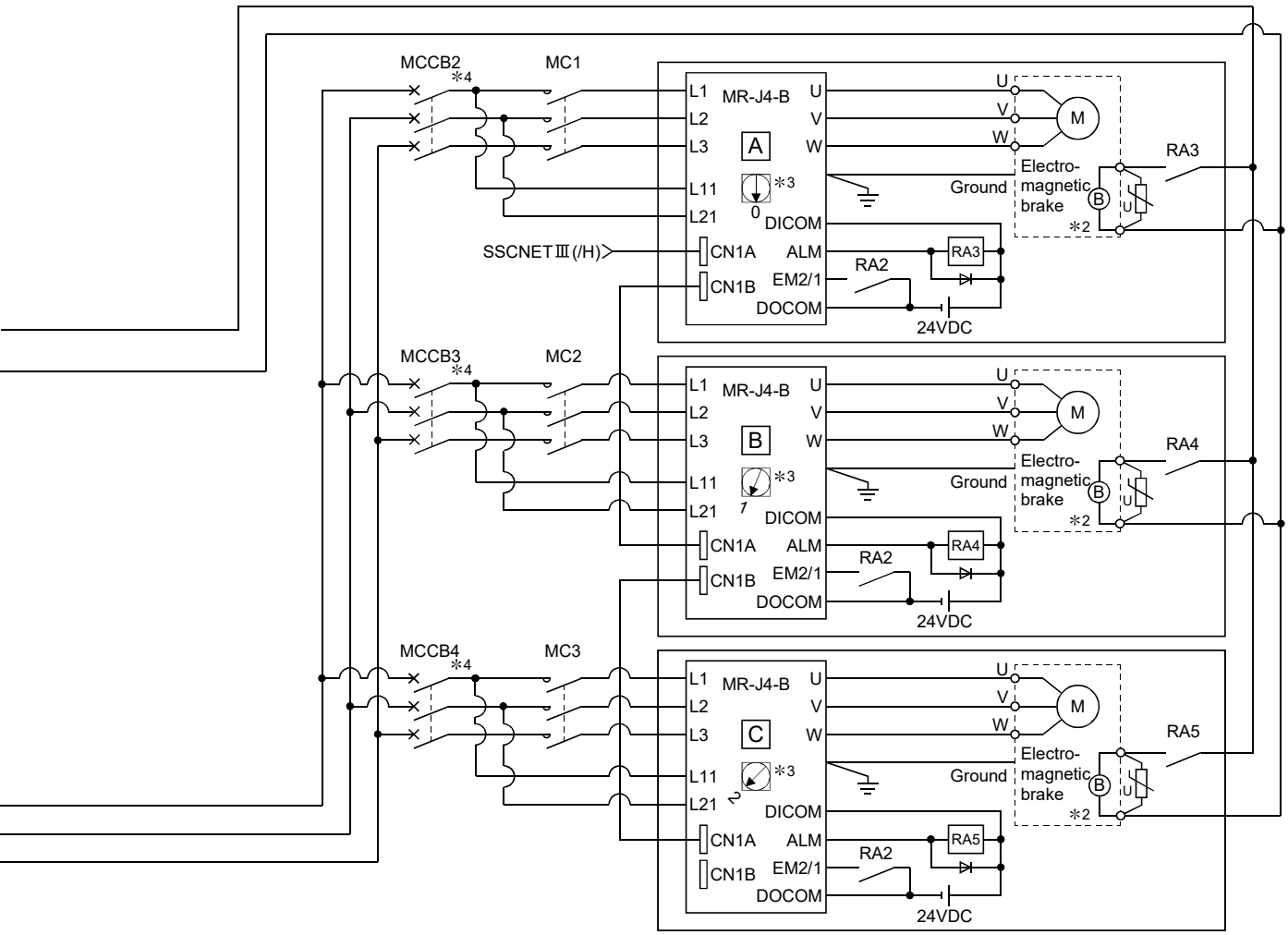

(Note-1): When the control power supply of servo amplifier is shut off, it is not possible to communicate with the servo amplifier after that.
Example) When the control power supply L11/L21 of the servo amplifier [B] in the above figure is shut off, it is also not possible to communicate with the servo amplifier [C].
If only a specific servo amplifier main circuit power supply is shut off, be sure to shut off the main circuit power supply L1/L2/L3, and do not shut off the control power supply L11/L21.

(Note-2): Be sure to shut off the both of main circuit power supply L1/L2/L3 and control power supply L11/L21 after disconnection of SSCNET communication by the connect/disconnect function of SSCNET communication at the time of exchange of servo amplifier. At this time, it is not possible to communicate between the servo amplifier and Simple Motion module. Therefore, be sure to exchange the servo amplifier after stopping the operating of machine beforehand.

(Note-3): The dynamic brake is operated, and servomotor occurs to the free run when EM1 (forced stop) of servo amplifier is turned OFF. At the time, the display shows "E6.1" (forced stop warning).
During ordinary operation, do not use EM1 (forced stop) of the servo amplifier to alternate stop and run.
The service life of the servo amplifier may be shortened.

MEMO

(4) Example when using the forced stop of the QD77MS and MR-JE-B

Important

- The hot line forced stop function is enabled at the MR-JE-B factory-set. (Only MR-JE-B)
- This function is used to execute deceleration stop for all axes by outputting the hot line forced stop signal to all axes and generating "E7.1" (Controller forced stop input warning) at the alarm occurrence.
- This function can be disabled by the servo parameter (PA27).
- For using the MR-JE-B, configure up the power supply circuit which switches off the all axes electromagnetic contactor (MC) from the CPU module after detecting the alarm occurrence on the CPU module.

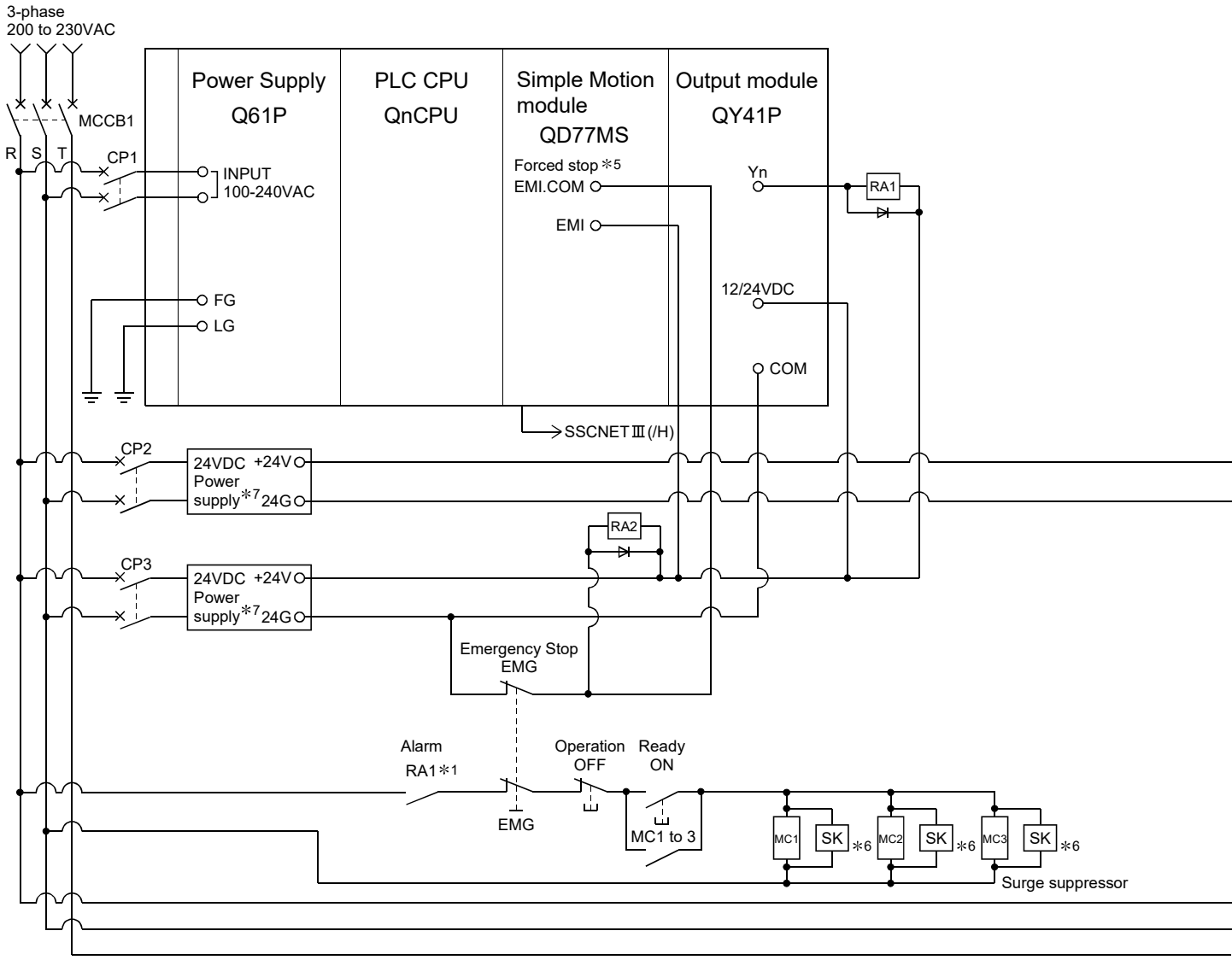

POINT

(1) ∗1: Configure up the power supply circuit which switch off the electromagnetic contactor (MC) after detection alarm occurrence on the PLC CPU.

(2) ∗2: It is also possible to use a full wave rectified power supply as the power supply for the electromagnetic brake.

(3) ∗3: Set the axis selection rotary switch of servo amplifier as follows to set the axis No. of servo amplifier.

- Axis 1: 0
- Axis 2: 1
- Axis 3: 2
- Axis 4: 3
- Axis 5: 4
- Axis 6: 5
- Axis 7: 6
- Axis 8: 7
- Axis 9: 8
- Axis 10: 9
- Axis 11: A
- Axis 12: B
- Axis 13: C
- Axis 14: D
- Axis 15: E
- Axis 16: F

(4) ∗4: Refer to the servo amplifier instruction manual for selection of the circuit breaker and electromagnetic contactor.

(5) ∗5: The status of forced stop input signal can be confirmed with "[Md.50] Forced stop input". Be sure that the forced stop 24 V DC power supply is not used with the electromagnetic brake of the motor or the electromagnetic valve power supply.

(6) ∗6: The surge suppressor is recommended to be used for an AC relay or electromagnetic contactor (MC) near the servo amplifier. Refer to the servo amplifier instruction manual for selection of the surge suppressor.

(7) ∗7: Wire the electromagnetic brake power supply and the control power supply using a separate power supply.

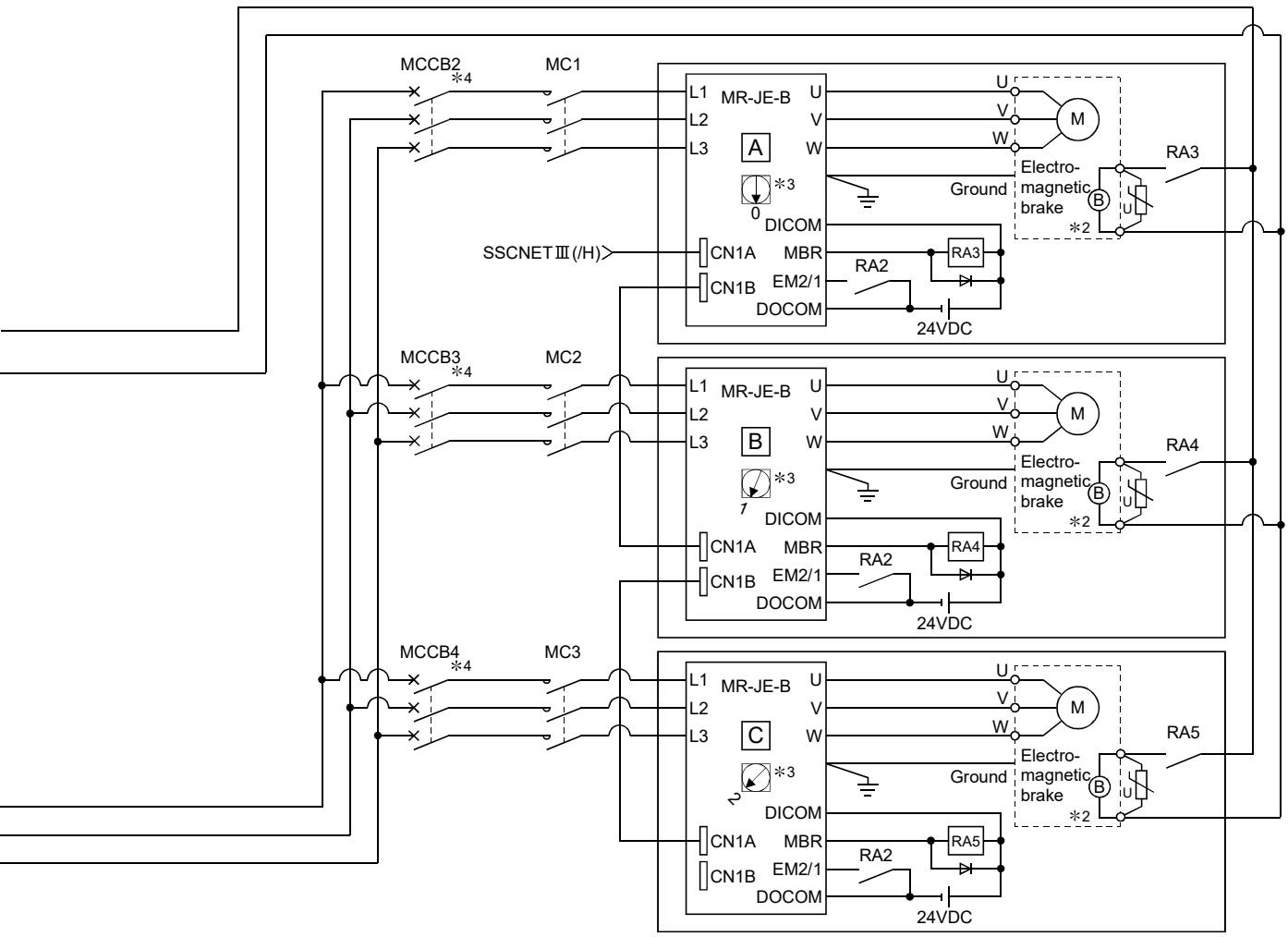

(Note-1): When the power supply of servo amplifier is shut off, it is not possible to communicate with the servo amplifier after that.
Example) When the power supply L1/L2/L3 of the servo amplifier [B] in the above figure is shut off, it is also not possible to communicate with the servo amplifier [C].

(Note-2): Be sure to shut off power supply L1/L2/L3 after disconnection of SSCNET communication by the connect/disconnect function of SSCNET communication at the time of exchange of servo amplifier. At this time, it is not possible to communicate between the servo amplifier and Simple Motion module. Therefore, be sure to exchange the servo amplifier after stopping the operating of machine beforehand.

(Note-3): The dynamic brake is operated, and servomotor occurs to the free run when EM1 (forced stop) of servo amplifier is turned OFF. At the time, the display shows "E6.1" (forced stop warning).
During ordinary operation, do not use EM1 (forced stop) of the servo amplifier to alternate stop and run.
The service life of the servo amplifier may be shortened.

Chapter 4 Installation, Wiring and Maintenance of the Product

The installation, wiring and maintenance of the Simple Motion module are explained in this chapter.

Important information such as precautions to prevent malfunctioning of the Simple Motion module, accidents and injuries as well as the proper work methods are described. Read this chapter thoroughly before starting installation, wiring or maintenance, and always following the precautions.

4.1 Outline of installation, wiring and maintenance 4- 2
4.1.1 Installation, wiring and maintenance procedures 4- 2
4.1.2 Names of each part 4- 3
4.1.3 Handling precautions 4- 5
4.2 Installation 4- 7
4.2.1 Precautions for installation 4- 7
4.3 Wiring 4- 8
4.3.1 Precautions for wiring 4- 8
4.4 Confirming the installation and wiring 4-19
4.4.1 Items to confirm when installation and wiring are completed 4-19
4.5 Maintenance 4-20
4.5.1 Precautions for maintenance 4-20
4.5.2 Disposal instructions 4-20

4.1 Outline of installation, wiring and maintenance

4.1.1 Installation, wiring and maintenance procedures

The outline and procedures for Simple Motion module installation, wiring and maintenance are shown below.

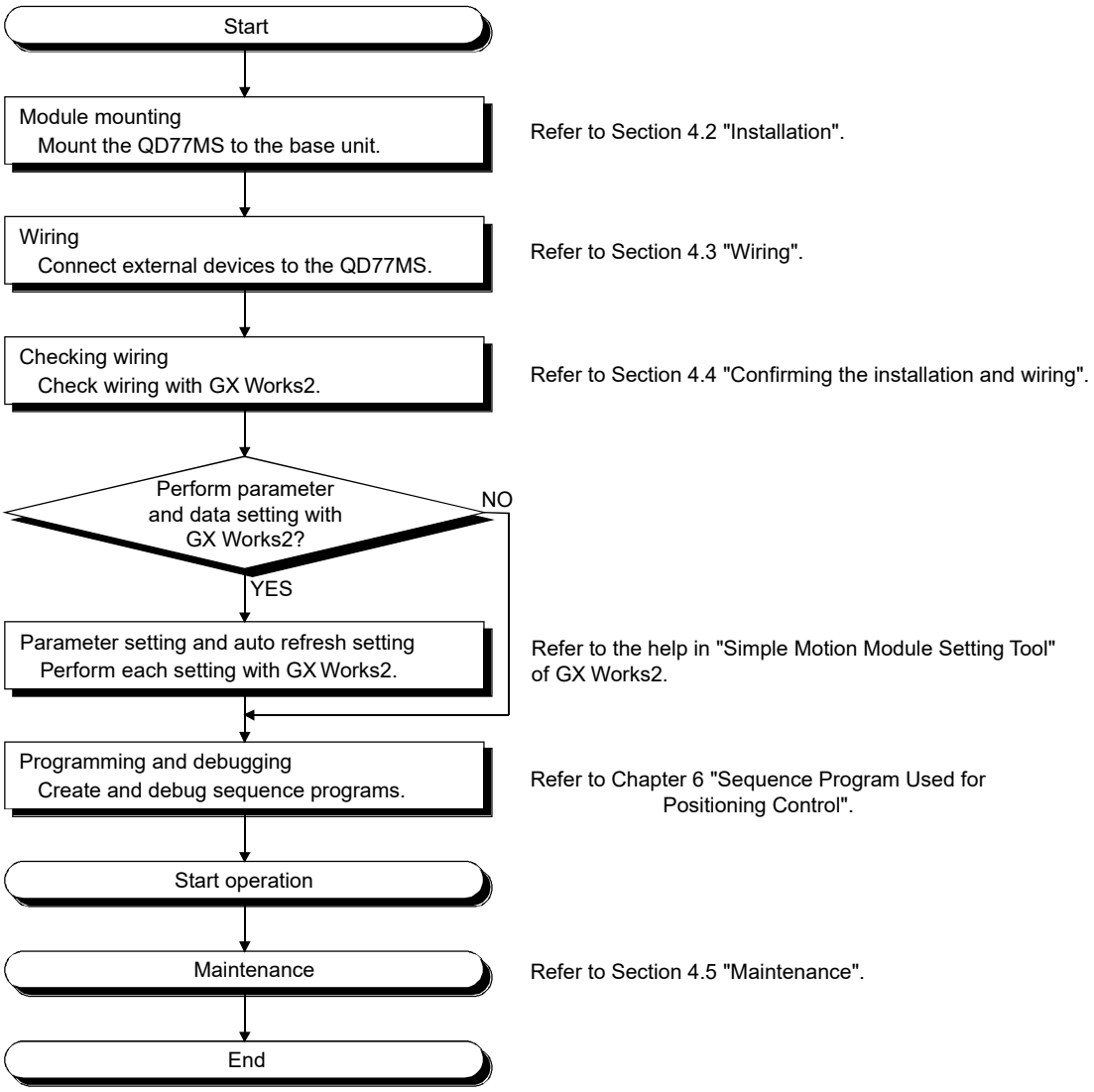

4.1.2 Names of each part

(1) The part names of the Simple Motion module are shown below.

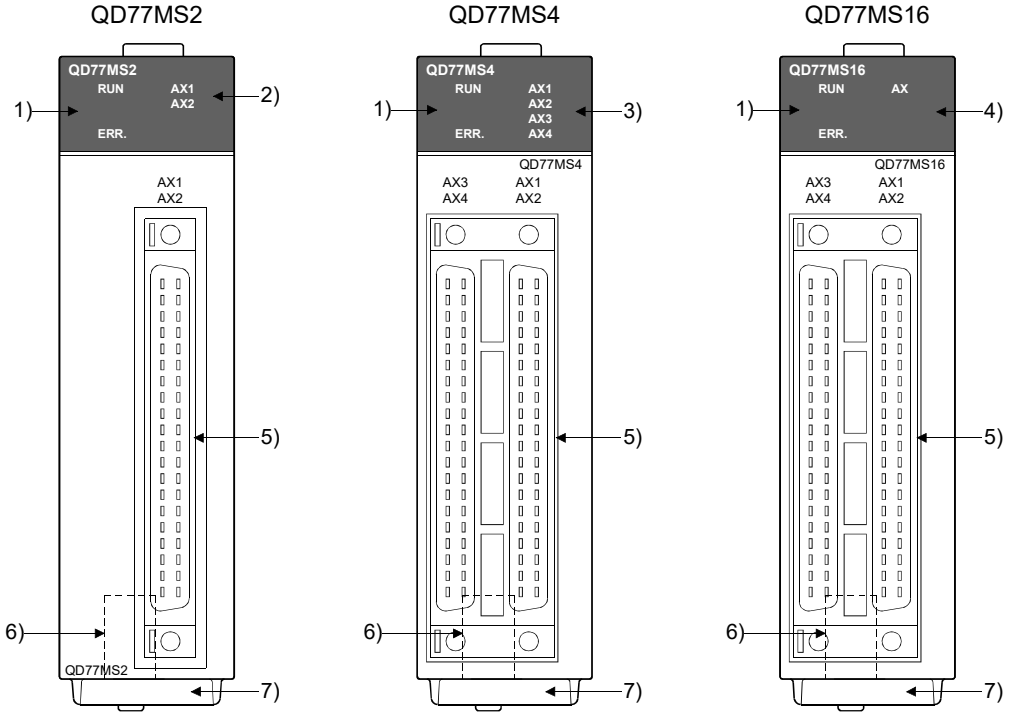

No.	Name	Description
1)	RUN indicator LED, ERR indicator LED	Refer to this section (2).
2)	Axis display LED (AX1 to AX2)	
3)	Axis display LED (AX1 to AX4)	
4)	Axis display LED (AX)	
5)	External input connection connector	Connector to connect the mechanical system input, manual pulse generator/incremental synchronous encoder, or forced stop input. (40-pin connector) Refer to Section 3.4.2 for details.
6)	SSCNETⅢ cable connector	Connector to connect the servo amplifier.
7)	Serial number plate	Shows the serial number printed on the rating plate.

(2) The LED display indicates the following operation statuses of the Simple Motion module and axes.

QD77MS2 QD77MS4 QD77MS16

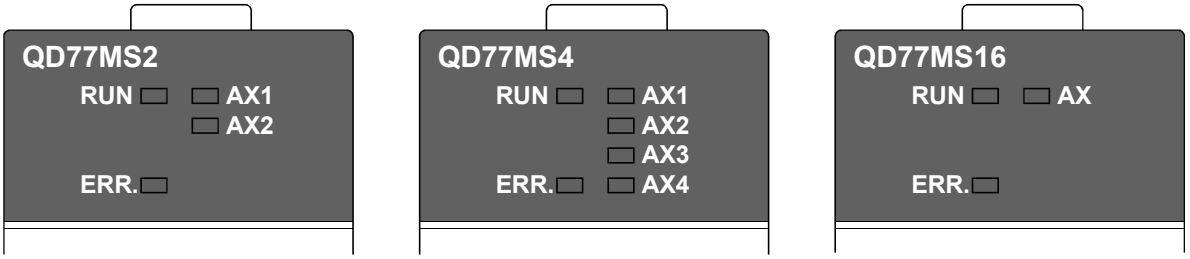

	LED Display						Description
	QD77MS2		QD77MS4		QD77MS16		
RUN LED is OFF.	RUN □ ERR. □	□ AX1 □ AX2	RUN □ ERR. □	□ AX1 □ AX2 □ AX3 □ AX4	RUN □ ERR. □	□ AX	Hardware failure, watch dog timer error
RUN LED is ON. ERR. LED is OFF.	RUN ■ ERR. □	□ AX1 □ AX2	RUN ■ ERR. □	□ AX1 □ AX2 □ AX3 □ AX4	RUN ■ ERR. □	□ AX	The module operates normally.
ERR. LED is ON.	RUN ■ ERR. ■	□ AX1 □ AX2	RUN ■ ERR. ■	□ AX1 □ AX2 □ AX3 □ AX4	RUN ■ ERR. ■	□ AX	System error
AX LED is OFF. (In the QD77MS2/QD77MS4, AX LED of the stopping axis, standby axis is OFF. In the QD77MS16, AX LED is OFF when all axes are stopping or standby.)	RUN ■ ERR. □	□ AX1 □ AX2	RUN ■ ERR. □	□ AX1 □ AX2 □ AX3 □ AX4	RUN ■ ERR. □	□ AX	During axis stop, during axis standby.
AX LED is ON. (In the QD77MS2/QD77MS4, AX LED of the operating axis is steady. In the QD77MS16, AX LED is steady when any of the axes is operating.)	RUN ■ ERR. □	■ AX1 □ AX2	RUN ■ ERR. □	■ AX1 □ AX2 □ AX3 □ AX4	RUN ■ ERR. □	■ AX	During axis operation.
ERR. LED is flashing. AX is flashing. (In the QD77MS2/QD77MS4, AX LED of the axis in which an error occurred is flashing. In the QD77MS16, AX LED is flashing when an error occurs in any of the axes.)	RUN ■ ERR. ◆	◆ AX1 □ AX2	RUN ■ ERR. ◆	◆ AX1 □ AX2 □ AX3 □ AX4	RUN ■ ERR. ◆	◆ AX	Axis error (Note-1)
All LED are ON.	RUN ■ ERR. ■	■ AX1 ■ AX2	RUN ■ ERR. ■	■ AX1 ■ AX2 ■ AX3 ■ AX4	RUN ■ ERR. ■	■ AX	Hardware failure

The symbols in the Display column indicate the following LED statuses:

□: OFF, ■: ON, ◆: Flashing

(Note-1): When an error occurs in the synchronous encoder axis or the command generation axis, only the ERR. LED operates. (The AX LED does not operate.)

4.1.3 Handling precautions

Handle the Simple Motion module and cable while observing the following precautions.

[1] Handling precautions

⚠CAUTION

- Use the programmable controller in an environment that meets the general specifications in the manual "Safety Guidelines", the manual supplied with the main base unit.
  Using the programmable controller in an environment outside the range could result in electric shock, fire, operation failure, and damage to or deterioration of the product.
- Do not directly touch the module's conductive parts and electronic components. Doing so may could cause an operation failure or give damage to the module.
- Be sure there are no foreign matters such as sawdust or wiring debris inside the module. Such debris could cause fire, damage, or operation failure.
- Never try to disassemble or modify the modules. It may cause product failure, operation failure, injury or fire.
- Completely turn off the externally supplied power used in the system before installation or removing the module. Not doing so could result in damage to the module.
- Because the connector has its orientation, check it before attaching or detaching the connector straight from the front.
  Unless it is properly installed, a poor contact may occur, resulting in erroneous input and output.

[2] Other precautions

(1) Main body

- The main body case is made of plastic. Take care not to drop or apply strong impacts onto the case.
- Do not remove the PCB of Simple Motion module from the case. Failure to observe this could lead to faults.
- Before touching the module, always touch grounded metal, etc. to discharge static electricity from human body. Failure to do so may cause the module to fail or malfunction.

(2) Cable

- Do not press on the cable with a sharp object.
- Do not twist the cable with force.
- Do not forcibly pull on the cable.
- Do not step on the cable.
- Do not place objects on the cable.
- Do not damage the cable sheath.

(3) Installation environment

Do not install the module in the following type of environment.

- Where the ambient temperature exceeds the 0 to 55°C range.
- Where the ambient humidity exceeds the 5 to 95%RH range.
- Where temperature rapid changes and dew condenses.
- Where there is corrosive gas or flammable gas.
- Where there are high levels of dust, conductive powder, such as iron chips, oil mist, salt or organic solvents.
- Where the module is subject to direct sunlight.
- Where there are strong electric fields or magnetic fields.
- Where vibration or impact could be directly applied onto the main body.

4.2 Installation

4.2.1 Precautions for installation

The precautions for installing the Simple Motion module are given below. Refer to this section as well as Section 4.1.3 "Handling precautions" when carrying out the work.

Precautions for installation

⚠DANGER

- Completely turn off the externally supplied power used in the system before installing or removing the module.
  Not doing so could result in electric shocks, an operation failure or damage to the module.

⚠CAUTION

- Never try to disassemble or modify the modules. It may cause product failure, operation failure, injury or fire.
- Completely turn off the externally supplied power used in the system before installation or removing the module.
  Not doing so could result in an operation failure or damage to the module.
- After the first use of the module, the number of connections/disconnections is limited to 50 times (in accordance with IEC 61131-2). Exceeding the limit may cause malfunction.
- Use the programmable controller in an environment that meets the general specifications in the manual "Safety Guidelines", the manual supplied with the main base unit.
  Using the programmable controller in an environment outside the range could result in electric shock, fire, operation failure, and damage to or deterioration of the product.
- Do not directly touch the module's conductive parts and electronic components. Doing so may could cause an operation failure or give damage to the module.
- While pressing the installation lever located at the bottom of module, insert the module fixing tab into the fixing hole in the base unit until it stops. Then, securely mount the module with the fixing hole as a supporting point.
  Incorrect loading of the module can cause a malfunction, failure or drop.
  When using the module in the environment of much vibration, tighten the module with a screw.
  Tighten the screw within the range of the specified tightening torque.
  Insufficient tightening may lead to dropping, short-circuit, or malfunctioning.
  Excessive tightening may damage the screw or module, leading to dropping, short-circuit, or malfunctioning.
- Lock the control panel and prevent access to those who are not certified to handle or install electric equipment.

4.3 Wiring

The precautions for wiring the Simple Motion module are given below. Refer to this section as well as Section 4.1.3 "Handling precautions" when carrying out the work.

4.3.1 Precautions for wiring

⚠DANGER

- Completely turn off the externally supplied power used in the system before installation or wiring. Not doing so could result in electric shock or damage to the product.

⚠CAUTION

- Check the layout of the terminals and then properly route the wires to the module.
- The external input wiring connector must be crimped or pressured with the tool specified by the manufacturer, or must be correctly soldered. Insufficient connections may cause short circuit, fire, or malfunction.
- Be careful not to let foreign matter such as sawdust or wire chips get inside the module. These may cause fires, failure or malfunction.
- The top surface of the module is covered with protective films to prevent foreign objects such as cable off cuts from entering the module when wiring. Do not remove this film until the wiring is complete. Before operating the system, be sure to remove the film to provide adequate ventilation.
- Securely connect the connector for SSCNETⅢ cable to the bottom connector on the module.
- When removing the cable from the module, do not pull the cable. Hold the connector that is connected to the module. Pulling the cable that is still connected to the module may cause malfunction or damage to the module or cable.
- The external input/output signal cable and the communication cable should not be routed near or bundled with the main circuit cable, power cable and/or other such load - carrying cables other than those for the PLC. These cables should be separated by at least 100mm (3.94inch) or more. They can cause electrical interference, surges and inductance that can lead to mis-operation.
- The shielded cable for connecting Simple Motion module can be secured in place. If the shielded cable is not secured, unevenness or movement of the shielded cable or careless pulling on it could result in damage to the Simple Motion module, servo amplifier or shielded cable or defective cable connections could cause mis-operation of the unit.
- If the external input/output signal cable and the power line must be adjacently laid (less than 100mm (3.94inch)), use a shielded cable. Ground the shield of the cable securely to the control panel on the Simple Motion module side. (A wiring example is given on this section "[1] Precautions for wiring").

⚠CAUTION

- Forcibly removal the SSCNETⅢ cable from the Simple Motion module will damage the Simple Motion module and SSCNETⅢ cables.
- After removal of the SSCNETⅢ cable, be sure to put a cap on the SSCNETⅢ connector. Otherwise, adhesion of dirt deteriorates in characteristic and it may cause malfunctions.
- Do not remove the SSCNETⅢ cable while turning on the power supply of Simple Motion module and servo amplifier. Do not see directly the light generated from SSCNETⅢ connector and the end of SSCNETⅢ cable. When the light gets into eye, may feel something is wrong for eye. (The light source of SSCNETⅢ cable complies with class1 defined in JISC6802 or IEC60825-1.)
- If the SSCNETⅢ cable is added a power such as a major shock, lateral pressure, haul, rapid bending or twist, its inside distorts or breaks, and optical transmission will not be available. Be sure to take care enough so that the short SSCNETⅢ cable is added a twist easily.
- Be sure to use the SSCNETⅢ cable within the range of operating temperature described in this manual. Especially, as optical fiber for MR-J3BUS_M and MR-J3BUS_M-A are made of synthetic resin, it melts down if being left near the fire or high temperature. Therefore, do not make it touched the part which becomes high temperature, such as radiator or regenerative option of servo amplifier, or servomotor.
- When laying the SSCNETⅢ cable, be sure to secure the minimum cable bend radius or more. (Refer to this Section [2] Precautions for SSCNETⅢ cable wiring.)
- Put the SSCNETⅢ cable in the duct or fix the cable at the closest part to the Simple Motion module with bundle material in order to prevent SSCNETⅢ cable from putting its own weight on SSCNETⅢ connector. When laying cable, the optical cord should be given loose slack to avoid from becoming smaller than the minimum bend radius, and it should not be twisted. Also, fix and hold it in position with using cushioning such as sponge or rubber which does not contain plasticizing material.
- Migrating plasticizer is used for vinyl tape. Keep the MR-J3BUS_M, and MR-J3BUS_M-A cables away from vinyl tape because the optical characteristic may be affected.

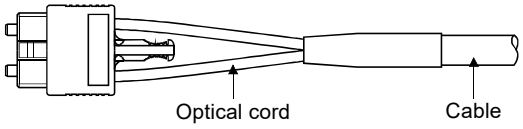

SSCNETⅢ cable	Cord	Cable
MR-J3BUS_M	△	
MR-J3BUS_M-A	△	△
MR-J3BUS_M-B	○	○

○: Normally, cable is not affected by plasticizer.
△: Phthalate ester plasticizer such as DBP and DOP may affect optical characteristic of cable.

Generally, soft polyvinyl chloride (PVC), polyethylene resin (PE) and fluorine resin contain non-migrating plasticizer and they do not affect the optical characteristic of SSCNETⅢ cable. However, some wire sheaths and cable ties, which contain migrating plasticizer (phthalate ester), may affect MR-J3BUS_M and MR-J3BUS_M-A cables (made of plastic).
In addition, MR-J3BUS_M-B cable (made of quartz glass) is not affected by plasticizer.

⚠CAUTION

- If the adhesion of solvent and oil to the cord part of SSCNETⅢ cable may lower the optical characteristic and machine characteristic. If it is used such an environment, be sure to do the protection measures to the cord part.
- When keeping the Simple Motion module or servo amplifier, be sure to put on a cap to connector part so that a dirt should not adhere to the end of SSCNETⅢ connector.
- SSCNETⅢ connector to connect the SSCNETⅢ cable is put a cap to protect light device inside connector from dust. For this reason, do not remove a cap until just before connecting SSCNETⅢ cable. Then, when removing SSCNETⅢ cable, make sure to put a cap.
- Keep the cap and the tube for protecting light cord end of SSCNETⅢ cable in a plastic bag with a zipper of SSCNETⅢ cable to prevent them from becoming dirty.
- When exchanging the Simple Motion module or servo amplifier, make sure to put cap on SSCNETⅢ connector. When asking repair of Simple Motion module or servo amplifier for some troubles, make also sure to put a cap on SSCNETⅢ connector. When the connector is not put a cap, the light device may be damaged at the transit. In this case, exchange and repair of light device is required.

[1] Precautions for wiring

(1) Use separate cables for connecting to the Simple Motion module and for the power cable that create surge and inductance.

(2) The cable for connecting the Simple Motion module can be placed in the duct or secured in place by clamps. If the cable is not placed in the duct or secured by clamps, unevenness or movement of the cable or careless pulling on it could result in damage to the unit or cable or defective cable connections could cause mis-operation of the unit.

(3) If a duct is being used, separate the cables to connect the Simple Motion module from the power line duct, or use metal piping.
Ground the pipes securely after metal piping.

(4) Use the twisted pair shielded cable (wire size 0.3 mm^2 or more). The shielded must be grounded on the Simple Motion module side.

(5) Use separate shielded cables of the forced stop input signal (EMI, EMI.COM), limit signal (FLS, RLS, DOG, STOP), external command signal/switching signal (DI, COM), and manual pulse generator/incremental synchronous encoder input signal (HAH, HAL, HBH, HBL, HA, HB, 5V, SG) for connecting to the Simple Motion module. They can cause electrical interference, surges and inductance that can lead to mis-operation.

[Wiring example of shielded cable]

The following shows a wiring example for noise reduction in the case when the connector (A6CON1) is used.

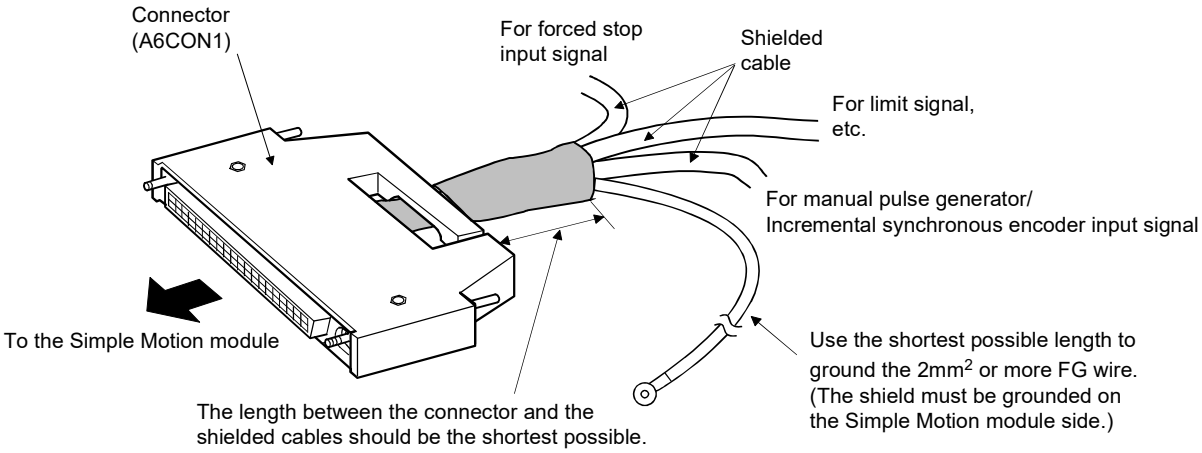

Grounding of FG wire

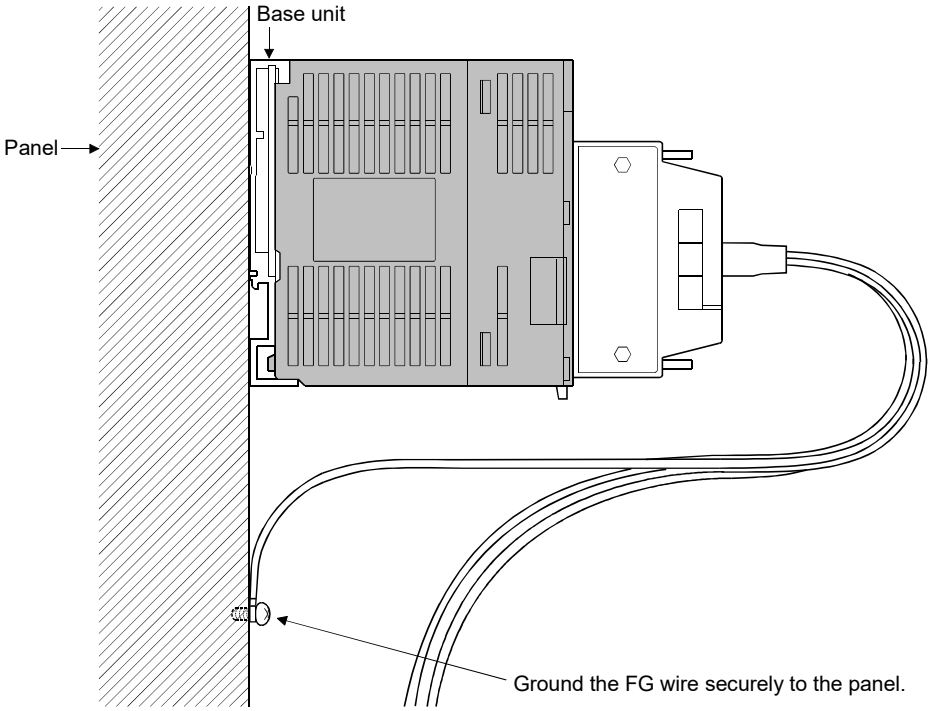

[Processing example of shielded cables]

Connections of FG wire and each shielded cable

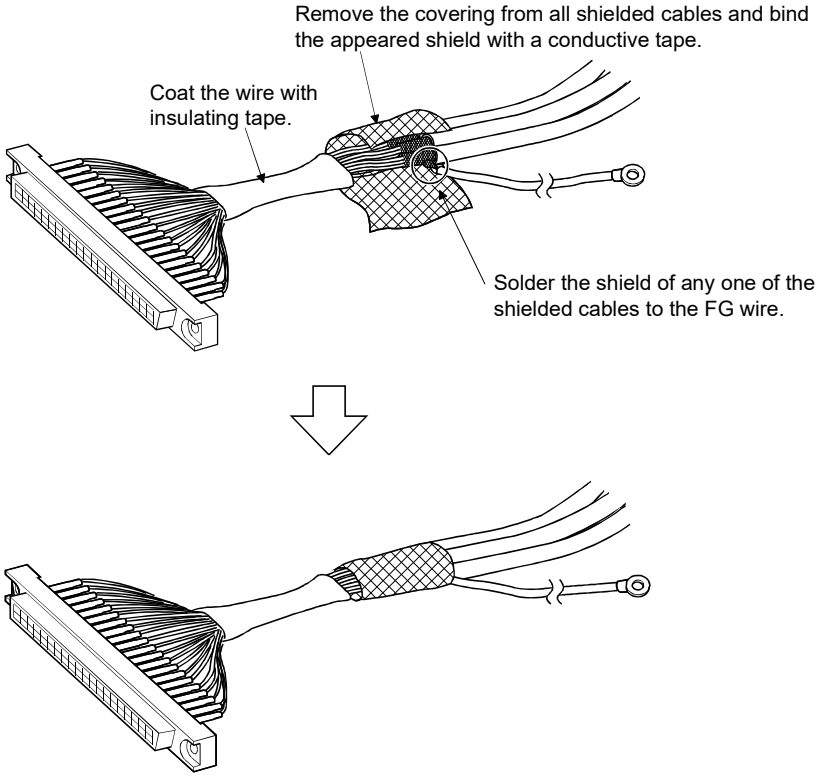

Assembling of connector (A6CON1)

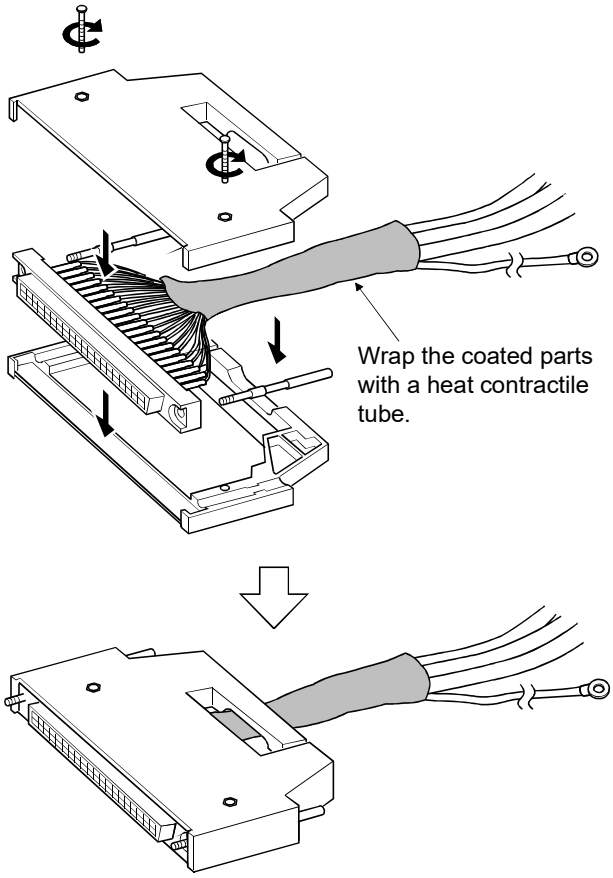

(6) To make this product conform to the EMC directive instruction and Low Voltage Directives, be sure to use an AD75CK type cable clamp (manufactured by Mitsubishi Electric) for grounding connected to the control box and the shielded cable.

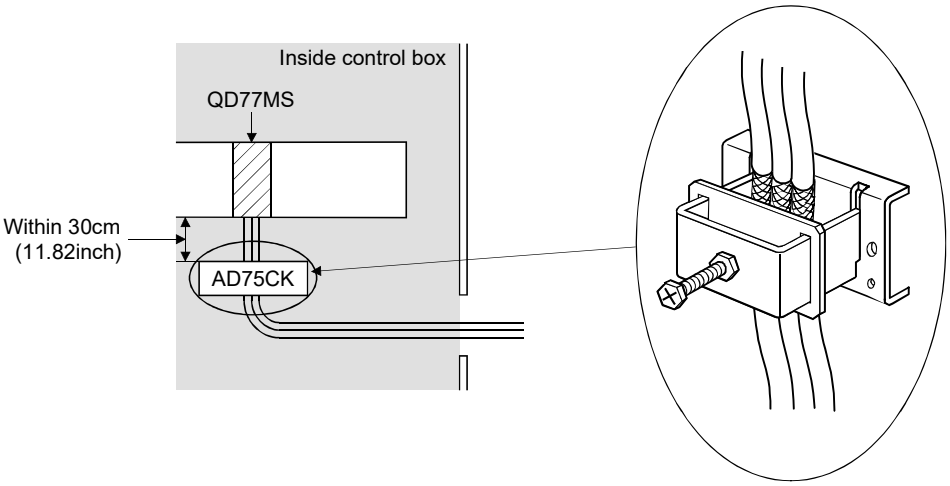

[How to ground shielded cable using AD75CK]

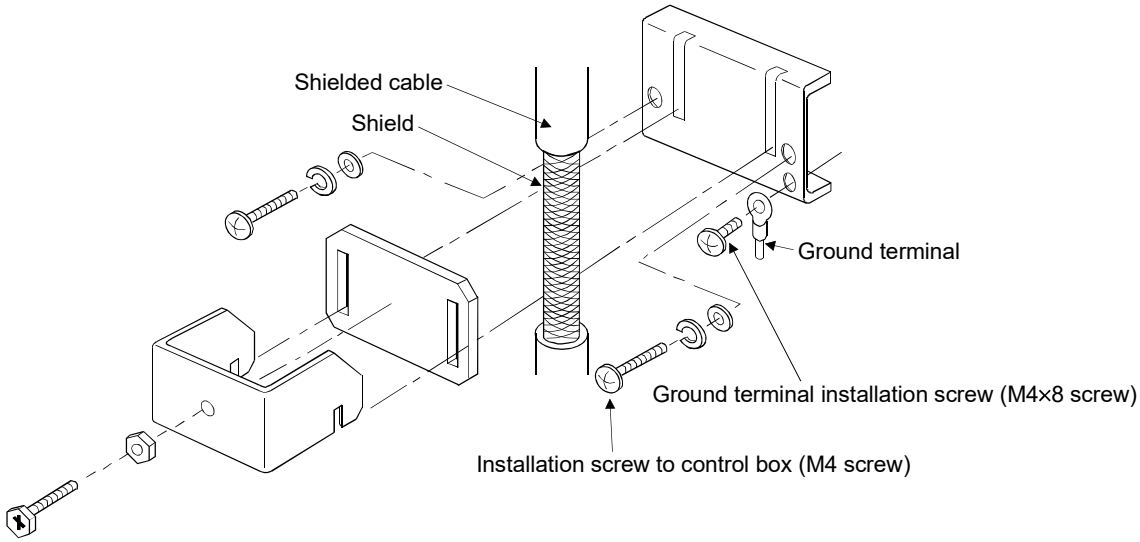

Using the AD75CK, you can tie four cables of about 7mm (0.28inch) outside diameter together for grounding.
(Refer to the "AD75CK-type Cable Clamping Instruction Manual" (IB-68682).)

⚠CAUTION

- Do not ground the cable clamp to the top of control panel. Doing so may lead to damage by damage of screws, etc. during installation or removing the cable clamp.

[2] Precautions for SSCNETⅢ cable wiring

SSCNETⅢ cable is made from optical fiber. If optical fiber is added a power such as a major shock, lateral pressure, haul, rapid bending or twist, its inside distorts or breaks, and optical transmission will not be available. Especially, as optical fiber for MR-J3BUS_M, MR-J3BUS_M-A is made of synthetic resin, it melts down if being left near the fire or high temperature. Therefore, do not make it touched the part which becomes high temperature, such as radiator or regenerative option of servo amplifier and servomotor. Be sure to use optical fiber within the range of operating temperature described in this manual. Read described item of this section carefully and handle it with caution.

(1) Minimum bend radius

Make sure to lay the cable with greater radius than the minimum bend radius.

Do not press the cable to edges of equipment or others. For SSCNETⅢ cable, the appropriate length should be selected with due consideration for the dimensions and arrangement of Simple Motion module or servo amplifier. When closing the door of control panel, pay careful attention for avoiding the case that SSCNETⅢ cable is hold down by the door and the cable bend becomes smaller than the minimum bend radius.

Model name of SSCNETⅢ cable	Minimum bend radius [mm] ([inch])
MR-J3BUS_M	25 (0.98)
MR-J3BUS_M-A	Enforced covering cord: 50 (1.97), Cord: 25 (0.98)
MR-J3BUS_M-B	Enforced covering cord: 50 (1.97), Cord: 30 (1.18)

(2) Tension

If tension is added on the SSCNETⅢ cable, the increase of transmission loss occurs because of external force which concentrates on the fixing part of SSCNETⅢ cable or the connecting part of SSCNETⅢ connector. At worst, the breakage of SSCNETⅢ cable or damage of SSCNETⅢ connector may occur. For cable laying, handle without putting forced tension. (Refer to Section Appendix 2.1 "SSCNETⅢ cables" for the tension strength of SSCNETⅢ cable.)

(3) Lateral pressure

If lateral pressure is added on the SSCNETⅢ cable, the cable itself distorts, internal optical fiber gets stressed, and then transmission loss will increase. At worst, the breakage of SSCNETⅢ cable may occur. As the same condition also occurs at cable laying, do not tighten up SSCNETⅢ cable with a thing such as nylon band (TY-RAP).

Do not trample it down or tuck it down with the door of control box or others.

(4) Twisting

If the SSCNETⅢ cable is twisted, it will become the same stress added condition as when local lateral pressure or bend is added. Consequently, transmission loss increases, and the breakage of SSCNETⅢ cable may occur at worst.

(5) Disposal

When incinerating optical cable (cord) used for SSCNETⅢ cable, hydrogen fluoride gas or hydrogen chloride gas which is corrosive and harmful may be generated. For disposal of SSCNETⅢ cable, request for specialized industrial waste disposal services that have incineration facility for disposing hydrogen fluoride gas or hydrogen chloride gas.

(6) Wiring process of SSCNETⅢ cable

Put the SSCNETⅢ cable in the duct or fix the cable at the closest part to the Simple Motion module with bundle material in order to prevent SSCNETⅢ cable from putting its own weight on SSCNETⅢ connector. Leave the following space for wiring.

• Putting in the duct

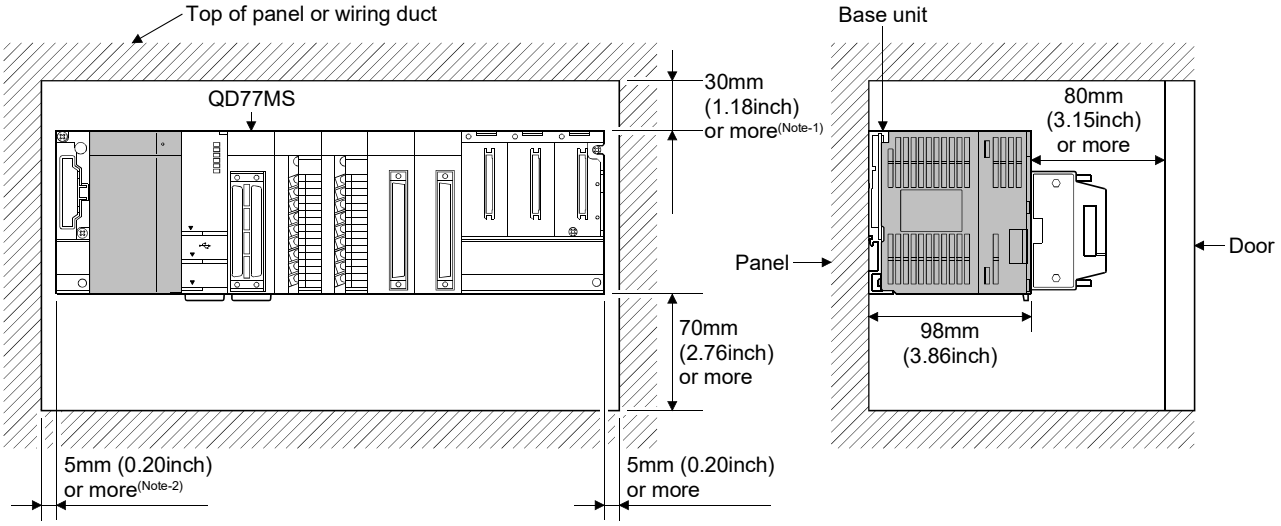

(Note-1): For wiring duct with 50mm (1.97inch) or less height. For other cases, 40mm (1.58inch) or more.
(Note-2): 20mm (0.79inch) or more when the adjacent module is not removed and the extension cable is connected.

• Bundle fixing

Optical cord should be given loose slack to avoid from becoming smaller than the minimum bend radius, and it should not be twisted. When laying cable, fix and hold it in position with using cushioning such as sponge or rubber which does not contain plasticizing material.

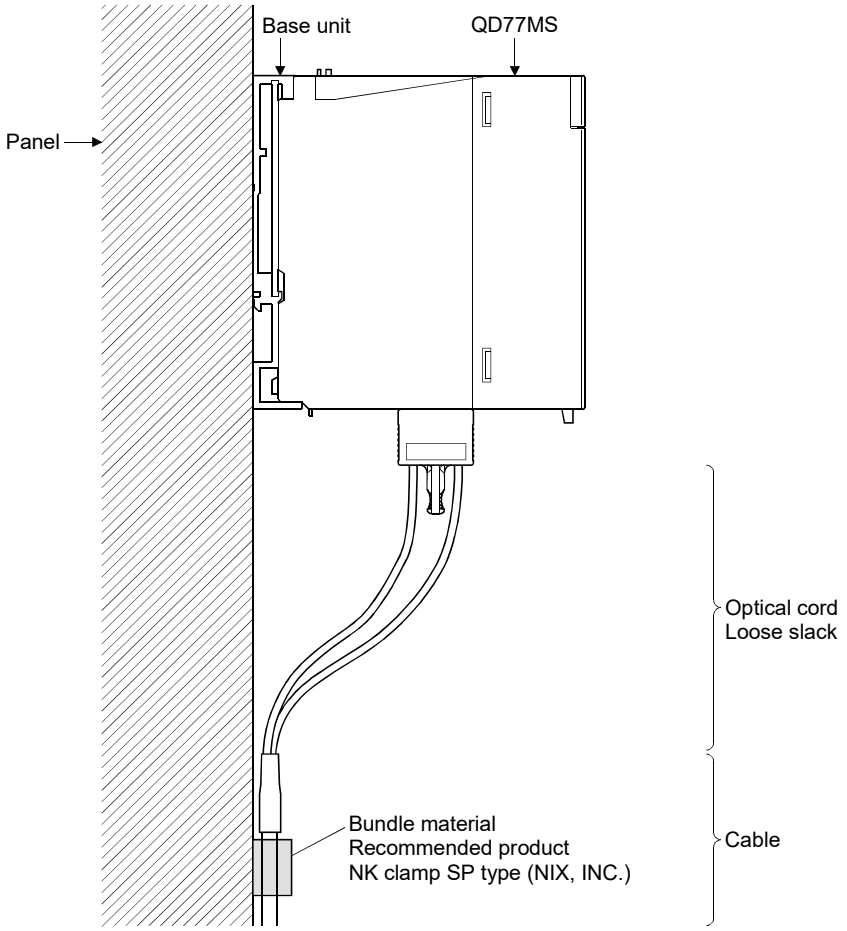

[3] Example of measure against noise for compliance with the EMC directive.

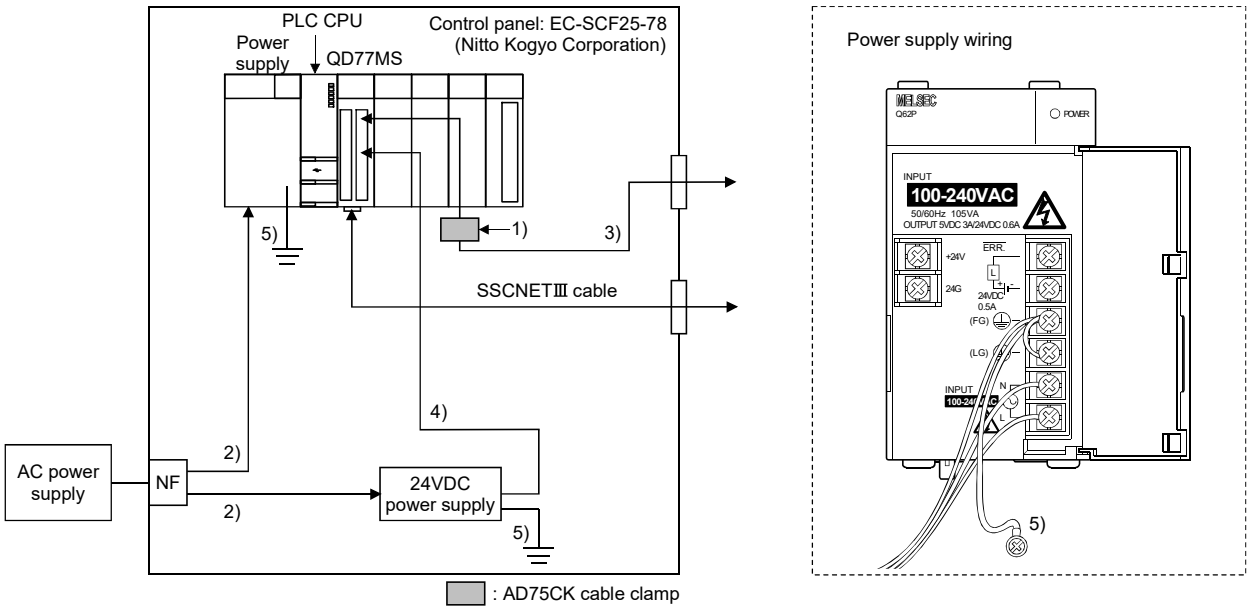

1) Ground the cables at a position within 30cm (11.82inch) from the module with the cable clamp, etc.
2) Wire the power supply cable as short as possible using the twisted cable ($2mm^2$ or more).
3) Use the shielded twisted cable (cable length: 30m (98.43ft.) or less) for each I/O signal cable.
4) Wire the cable connected to secondary side of 24VDC power supply module as short as possible.
5) Wire the power supply and 24VDC power supply as short as possible using the cable of approx. $2mm^2$, and ground to the control panel.

(1) Refer to this chapter or "EMC and Low Voltage Directives" of "QCPU User's Manual (Hardware Design, Maintenance and Inspection)" for basic wire. We examined QD77MS by the above example.

(2) In wiring inside the panel, the power line connected to the power or servo amplifier and the communication cable such as an expansion cable or a network cable must not be mixed. In the duct, leave 10cm (3.94inch) or more between the power line and the communication cable, and separate using a separator (made of metal), etc. It is required in the same control panel as well.
Mixing the power line and communication cable may cause increase of noise or malfunction due to noise influence.

4.4 Confirming the installation and wiring

4.4.1 Items to confirm when installation and wiring are completed

Check the following points when completed with the installation of Simple Motion module and wiring.

- Is the module correctly wired?

The following four points are confirmed using the positioning test function of GX Works2.
With this function, "whether the direction that the Simple Motion module recognizes as forward run matches the address increment direction in the actual positioning work", and "whether the Simple Motion module recognizes the external input signals such as the manual pulse generator and forced stop", etc., can be checked.

- Are the Simple Motion module and servo amplifier correctly connected?
- Are the servo amplifier and servomotor correctly connected?
- Are the Simple Motion module and external devices (input signals) correctly connected?
- Are the servo amplifier and external wiring (FLS, RLS, and DOG) correctly connected?

Refer to the help in "Simple Motion Module Setting Tool" of GX Works2 for details of "Positioning test function".

Note that the monitor data of the "[Md.30] External input signal" in the GX Works2 may also be used to "confirm the connection between the Simple Motion module and external devices (input signals)".

Important

If the Simple Motion module is faulty, or when the required signals such as the proximity dog signal and forced stop signal are not recognized, unexpected accidents such as "not decelerating at the proximity dog during machine HPR and colliding with the stopper", or "not being able to stop with the forced stop signal" may occur. Execute a checking wiring of external input signal. The connection confirmation by positioning test function must be carried out not only when structuring the positioning system, but also when the system has been changed with module replacement or rewiring, etc.

4.5 Maintenance

4.5.1 Precautions for maintenance

The precautions for servicing the Simple Motion module are given below. Refer to this section as well as Section 4.1.3 "Handling precautions" when carrying out the work.

⚠DANGER

- Completely turn off the externally supplied power used in the system before clearing or tightening the connector screws.
  Not doing so could result in electric shocks.

⚠CAUTION

- Never try to disassemble or modify the modules.
  It may cause product failure, operation failure, injury or fires.
- Completely turn off the externally supplied power used in the system before installation or removing the module.
  Not doing so could result in electric shock, damage to the module or operation failure.

4.5.2 Disposal instructions

When you discard a Simple Motion module, a servo amplifier, a battery (primary battery) and other option articles, please follow the law of each country (area).

⚠CAUTION

- This product is not designed or manufactured to be used in equipment or systems in situations that can affect or endanger human life.
- When considering this product for operation in special applications such as machinery or systems used in passenger transportation, medical, aerospace, atomic power, electric power, or submarine repeating applications, please contact your nearest Mitsubishi sales representative.
- Although this product was manufactured under conditions of strict quality control, you are strongly advised to install safety devices to forestall serious accidents when it is used in facilities where a breakdown in the product is likely to cause a serious accident.

Chapter 5 Data Used for Positioning Control

The parameters and data used to carry out positioning control with the Simple Motion module are explained in this chapter.

With the positioning system using the Simple Motion module, the various parameters and data explained in this chapter are used for control. The parameters and data include parameters set according to the device configuration, such as the system configuration, and parameters and data set according to each control. Read this section thoroughly and make settings according to each control or application.

*: Refer to "Section 2" for details on each control.

5.1 Types of data 5- 2
5.1.1 Parameters and data required for control 5- 2
5.1.2 Setting items for positioning parameters 5- 6
5.1.3 Setting items for HPR parameters 5- 8
5.1.4 Setting items for expansion parameters 5- 9
5.1.5 Setting items for servo parameters 5- 9
5.1.6 Setting items for positioning data 5-10
5.1.7 Setting items for block start data 5-12
5.1.8 Setting items for condition data 5-13
5.1.9 Types and roles of monitor data 5-14
5.1.10 Types and roles of control data 5-19
5.2 List of parameters 5-23
5.2.1 Basic parameters 1 5-23
5.2.2 Basic parameters 2 5-29
5.2.3 Detailed parameters 1 5-30
5.2.4 Detailed parameters 2 5-41
5.2.5 HPR basic parameters 5-54
5.2.6 HPR detailed parameters 5-61
5.2.7 Expansion parameters 5-66
5.2.8 Servo parameters 5-71
5.3 List of positioning data 5-83
5.4 List of block start data 5-99
5.5 List of condition data 5-104
5.6 List of monitor data 5-114
5.6.1 System monitor data 5-114
5.6.2 Axis monitor data 5-128
5.7 List of control data 5-160
5.7.1 System control data 5-160
5.7.2 Axis control data 5-168

5.1 Types of data

5.1.1 Parameters and data required for control

The parameters and data required to carry out control with the Simple Motion module include the "setting data", "monitor data" and "control data" shown below.

■ Setting data

The data is set beforehand according to the machine and application. Set the data with programs or GX Works2. The data set for the buffer memory can also be saved in the flash ROM or internal memory (nonvolatile) in the Simple Motion module.

Important

The setting data can be backed up only in the flash ROM/internal memory (nonvolatile) of the Simple Motion module. It cannot be backed up in the PLC CPU and the SD memory card mounted to the PLC CPU.

The setting data is classified as follows.

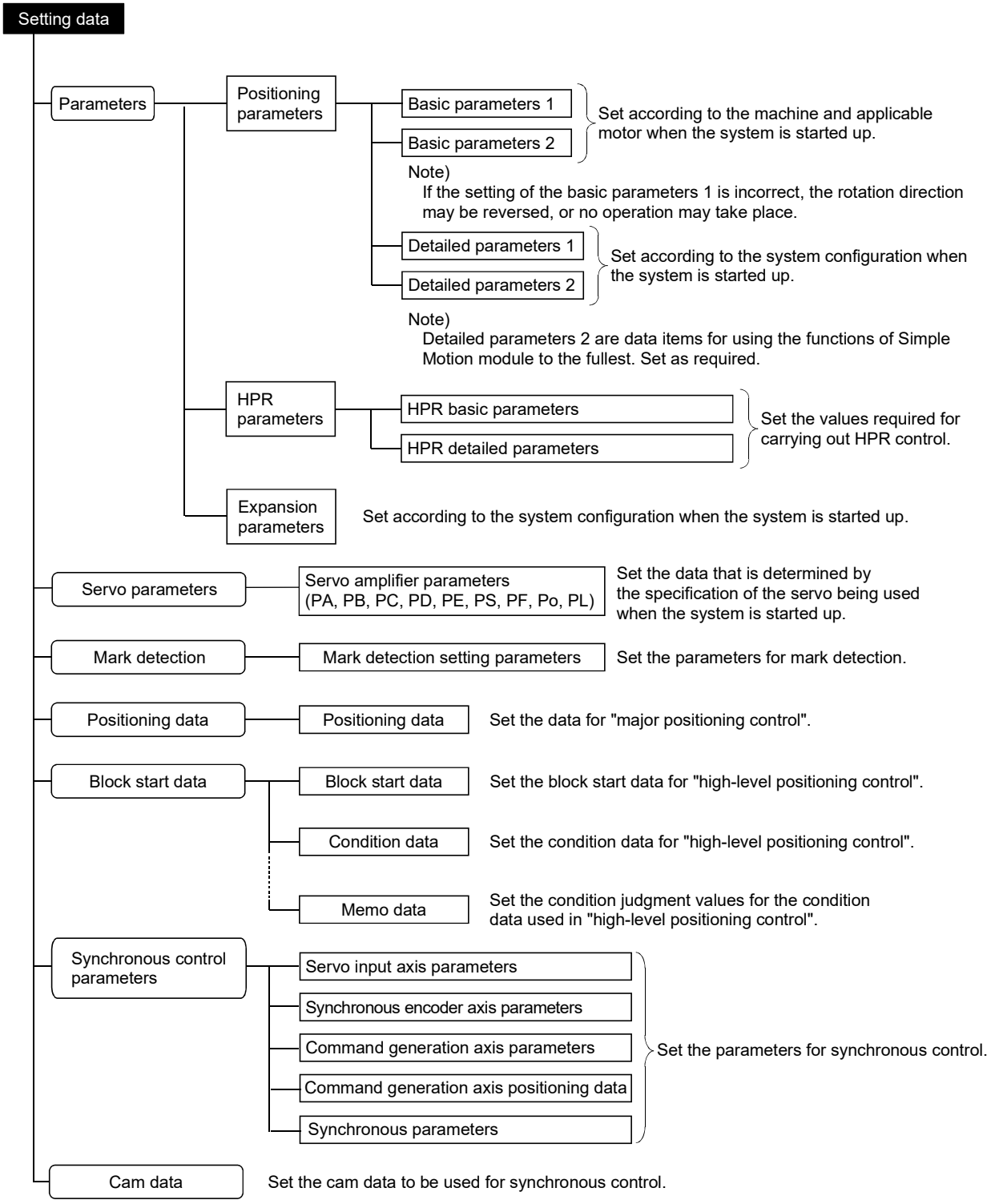
Setting data
Parameters
Positioning parameters
Basic parameters 1
Basic parameters 2
Set according to the machine and applicable motor when the system is started up.
Note)
If the setting of the basic parameters 1 is incorrect, the rotation direction may be reversed, or no operation may take place.
Detailed parameters 1
Detailed parameters 2
Set according to the system configuration when the system is started up.
Note)
Detailed parameters 2 are data items for using the functions of Simple Motion module to the fullest. Set as required.
HPR parameters
HPR basic parameters
HPR detailed parameters
Set the values required for carrying out HPR control.
Expansion parameters
Set according to the system configuration when the system is started up.
Servo parameters
Servo amplifier parameters (PA, PB, PC, PD, PE, PS, PF, Po, PL)
Set the data that is determined by the specification of the servo being used when the system is started up.
Mark detection
Mark detection setting parameters
Set the parameters for mark detection.
Positioning data
Positioning data
Set the data for "major positioning control".
Block start data
Block start data
Set the block start data for "high-level positioning control".
Condition data
Set the condition data for "high-level positioning control".
Memo data
Set the condition judgment values for the condition data used in "high-level positioning control".
Synchronous control parameters
Servo input axis parameters
Synchronous encoder axis parameters
Command generation axis parameters
Command generation axis positioning data
Synchronous parameters
Set the parameters for synchronous control.
Cam data
Set the cam data to be used for synchronous control.

◇ The following methods are available for data setting:
• Set using GX Works2.
• Create the sequence program for data setting using GX Works2 and execute it.
In this manual, the method using the GX Works2 will be explained.
(Refer to "POINT" on the next page.)

◇ The basic parameters 1, detailed parameters 1, HPR parameters, "[Pr.83] Speed control 10 x multiplier setting for degree axis", "[Pr.89] Manual pulse generator/Incremental synchronous encoder input type selection", "[Pr.90] Operation setting for speed-torque control mode" and "[Pr.95] External command signal selection" become valid when the PLC READY signal [Y0] turns from OFF to ON.

◇ The basic parameters 2, detailed parameters 2 (Note that this excludes "[Pr.83] Speed control 10 x multiplier setting for degree axis", "[Pr.89] Manual pulse generator/Incremental synchronous encoder input type selection", "[Pr.90] Operation setting for speed-torque control mode" and "[Pr.95] External command signal selection".) become valid immediately when they are written to the buffer memory, regardless of the state of the PLC READY signal [Y0].

◇ Even when the PLC READY signal [Y0] is ON, the values or contents of the following can be changed: basic parameters 2, detailed parameters 2, positioning data, and block start data.

◇ The expansion parameter and servo parameter is transmitted from the Simple Motion module to the servo amplifier when the initialized communication carried out after the power supply is turned ON or the PLC CPU is reset.
The power supply is turned ON or the PLC CPU is reset after writing servo parameter in flash ROM of Simple Motion module if the servo parameter is transmitted to the servo amplifier.
The following servo parameter in the buffer memory is transmitted to the servo amplifier when the PLC READY [Y0] turns from OFF to ON.
• "Auto tuning mode (PA08)"
• "Auto tuning response (PA09)"
• "Feed forward gain (PB04)"
• "Load to motor inertia ratio/load to motor mass ratio (PB06)"
• "Model loop gain (PB07)"
• "Position loop gain (PB08)"
• "Speed loop gain (PB09)"
• "Speed integral compensation (PB10)"
• "Speed differential compensation (PB11)"

◇ The only valid data assigned to basic parameter 2, detailed parameter 2, positioning data or block start data are the data read at the moment when a positioning or JOG operation is started. Once the operation has started, any modification to the data is ignored.
Exceptionally, however, modifications to the following are valid even when they are made during a positioning operation: acceleration time 0 to 3, deceleration time 0 to 3, and external command function.
• Acceleration time 0 to 3 and deceleration time 0 to 3:
Positioning data are pre-read and pre-analyzed. Modifications to the data four or more steps after the current step are valid.
• External command function selection: The value at the time of detection is valid.

■ Monitor data

The data indicates the control status. The data is stored in the buffer memory. Monitor the data as necessary.
The monitor data is classified as follows.

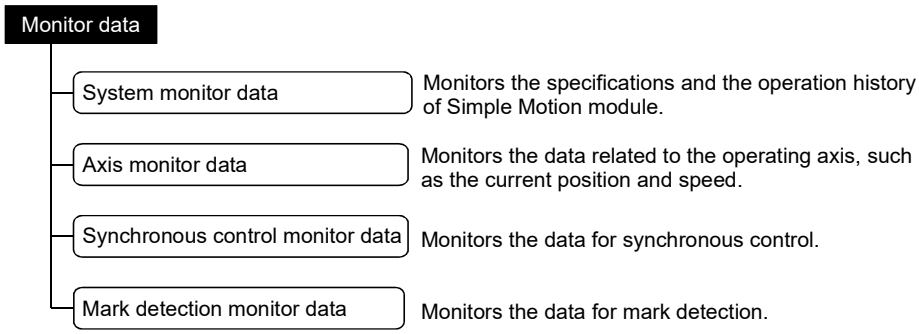

◇ The following methods are available for data monitoring:

- Set using GX Works2.
- Create the sequence program for monitoring using GX Works2 and execute it.

In this manual, the method using the GX Works2 will be explained.

■ Control data

The data is used by users to control the positioning system.
The control data is classified as follows.

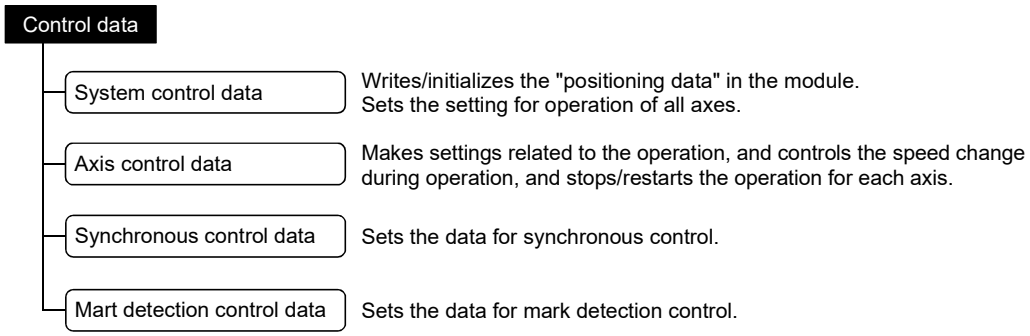

◇ Control using the control data is carried out with the sequence program.
"[Cd.41] Deceleration start flag valid" is valid for only the value at the time when the PLC READY signal [Y0] turns from OFF to ON.

POINT

(1) The "setting data" is created for each axis.
(2) The "setting data" parameters have determined default values, and are set to the default values before shipment from the factory. (Parameters related to axes that are not used are left at the default value.)
(3) The "setting data" can be initialized with GX Works2 or the sequence program.
(4) It is recommended to set the "setting data" with GX Works2. The sequence program for data setting is complicated and many devices must be used. This will increase the scan time.

5.1.2 Setting items for positioning parameters

The table below lists items set to the positioning parameters. The "positioning parameters" are set for each axis for all controls achieved by the Simple Motion module.
For details of controls, refer to "Section 2". For details of setting items, refer to Section 5.2 "List of parameters".

Positioning parameter \ Control			HPR control	Major positioning control: Position control: 1-axis linear control 2/3/4-axis linear interpolation control	Major positioning control: Position control: 1-axis fixed-feed control 2/3/4-axis fixed-feed control	Major positioning control: Position control: 2-axis circular interpolation control	Major positioning control: 1 to 4 axis speed control	Major positioning control: Speed-position or position-speed control	Major positioning control: Other control: Current value changing	Major positioning control: Other control: JUMP instruction, NOP instruction, LOOP to LEND	Manual control: Manual pulse generator operation	Manual control: Inching operation	Manual control: JOG operation	Expansion control: Speed-torque control	Related sub function
Basic parameters 1	[Pr.1]	Unit setting	◎	◎	◎	△	◎	◎	◎	◎	◎	◎	◎	◎	–
	[Pr.2]	Number of pulses per rotation (AP) (Unit: PLS)	◎	◎	◎	◎	◎	◎	◎	◎	◎	◎	◎	◎	13.3.2
	[Pr.3]	Movement amount per rotation (AL)	◎	◎	◎	◎	◎	◎	◎	◎	◎	◎	◎	◎	
	[Pr.4]	Unit magnification (AM)	◎	◎	◎	◎	◎	◎	◎	◎	◎	◎	◎	◎	
	[Pr.7]	Bias speed at start	○	○	○	○	○	○	–	–	–	–	○	×	–
Basic parameters 2	[Pr.8]	Speed limit value	◎	◎	◎	◎	◎	◎	–	–	–	◎	◎	◎	13.4.1
	[Pr.9]	Acceleration time 0	◎	◎	◎	◎	◎	◎	–	–	–	–	◎	–	13.7.6
	[Pr.10]	Deceleration time 0	◎	◎	◎	◎	◎	◎	–	–	–	–	◎	–	
Detailed parameters 1	[Pr.11]	Backlash compensation amount	○	○	○	○	○	○	–	–	○	○	○	–	13.3.1
	[Pr.12]	Software stroke limit upper limit value	–	○	○	○	○	○	○	–	○	○	○	○	13.4.3
	[Pr.13]	Software stroke limit lower limit value	–	○	○	○	○	○	○	–	○	○	○	○	
	[Pr.14]	Software stroke limit selection	–	○	○	○	○	○	○	–	○	○	○	○	
	[Pr.15]	Software stroke limit valid/invalid setting	–	–	–	–	–	–	–	–	○	○	○	–	
	[Pr.16]	Command in-position width	–	○	○	○	–	○	–	–	–	–	–	–	13.7.5
	[Pr.17]	Torque limit setting value	△	○	○	○	○	○	–	–	△	△	△	○	13.4.2
	[Pr.18]	M code ON signal output timing	–	○	○	○	○	○	○	–	–	–	–	–	13.7.3
	[Pr.19]	Speed switching mode	–	○	○	○	–	–	–	–	–	–	–	–	–
	[Pr.20]	Interpolation speed designation method	–	△	△	△	△	–	–	–	–	–	–	–	–
	[Pr.21]	Command position value during speed control	–	–	–	–	○	○	–	–	–	–	–	–	–
	[Pr.22]	Input signal logic selection	◎	◎	◎	◎	◎	◎	◎	◎	◎	◎	◎	◎	–
	[Pr.24]	Manual pulse generator/Incremental synchronous encoder input selection	–	–	–	–	–	–	–	–	◎	–	–	–	–
	[Pr.80]	External input signal selection	○	○	○	○	○	○	○	○	○	○	○	○	14.4
	[Pr.81]	Speed-position function selection	–	–	–	–	–	◎	–	–	–	–	–	–	–
	[Pr.82]	Forced stop valid/invalid selection	○	○	○	○	○	○	○	○	○	○	○	○	13.4.5

◎ : Always set
○ : Set as required ("–" when not required)
× : Setting not possible
△ : Setting restricted
– : Setting not required (When the value is the default value or within the setting range, there is no problem.)

Positioning parameter \ Control			HPR control	Major positioning control: Position control: 1-axis linear control 2/3/4-axis linear interpolation control	Major positioning control: Position control: 1-axis fixed-feed control 2/3/4-axis fixed-feed control	Major positioning control: Position control: 2-axis circular interpolation control	Major positioning control: 1 to 4 axis speed control	Major positioning control: Speed-position or position-speed control	Major positioning control: Other control: Current value changing	Major positioning control: Other control: JUMP instruction, NOP instruction, LOOP to LEND	Manual control: Manual pulse generator operation	Manual control: Inching operation	Manual control: JOG operation	Expansion control: Speed-torque control	Related sub function
Detailed parameters 2	[Pr.25]	Acceleration time 1	○	○	○	○	○	○	–	–	–	–	○	–	13.7.6
	[Pr.26]	Acceleration time 2	○	○	○	○	○	○	–	–	–	–	○	–	
	[Pr.27]	Acceleration time 3	○	○	○	○	○	○	–	–	–	–	○	–	
	[Pr.28]	Deceleration time 1	○	○	○	○	○	○	–	–	–	–	○	–	
	[Pr.29]	Deceleration time 2	○	○	○	○	○	○	–	–	–	–	○	–	
	[Pr.30]	Deceleration time 3	○	○	○	○	○	○	–	–	–	–	○	–	
	[Pr.31]	JOG speed limit value	–	–	–	–	–	–	–	–	–	◎	◎	–	13.4.1
	[Pr.32]	JOG operation acceleration time selection	–	–	–	–	–	–	–	–	–	–	◎	–	–
	[Pr.33]	JOG operation deceleration time selection	–	–	–	–	–	–	–	–	–	–	◎	–	–
	[Pr.34]	Acceleration/deceleration process selection	○	○	○	○	○	○	–	–	–	–	○	–	13.7. 6
	[Pr.35]	S-curve ratio	○	○	○	○	○	○	–	–	–	–	○	–	
	[Pr.36]	Rapid stop deceleration time	○	○	○	○	○	○	–	–	–	–	○	–	
	[Pr.37]	Stop group 1 rapid stop selection	○	○	○	○	○	○	–	–	–	–	○	–	–
	[Pr.38]	Stop group 2 rapid stop selection	○	○	○	○	○	○	–	–	–	–	○	–	–
	[Pr.39]	Stop group 3 rapid stop selection	○	○	○	○	○	○	–	–	–	–	○	–	–
	[Pr.40]	Positioning complete signal output time	–	○	○	○	○	○	○	–	–	–	–	–	–
	[Pr.41]	Allowable circular interpolation error width	–	–	–	○	–	–	–	–	–	–	–	–	–
	[Pr.42]	External command function selection	○	○	○	○	○	◎	○	–	–	–	○	–	13.5.1 13.7.2
	[Pr.83]	Speed control 10 x multiplier setting for degree axis	○	○	○	○	○	○	–	–	○	○	○	○	13.7.10
	[Pr.84]	Restart allowable range when servo OFF to ON	○	○	○	○	○	○	○	○	○	○	○	–	5.2.4
	[Pr.89]	Manual pulse generator/Incremental synchronous encoder input type selection	–	–	–	–	–	–	–	–	◎	–	–	–	5.2.4
	[Pr.90]	Operation setting for speed-torque control mode	–	–	–	–	–	–	–	–	–	–	–	○	12.1
	[Pr.95]	External command signal selection QD77MS16	○	○	○	○	○	◎	○	–	–	–	○	–	–

◎ : Always set
○ : Set as required ("–" when not required)
– : Setting not required (When the value is the default value or within the setting range, there is no problem.)

■ Checking the positioning parameters

[Pr.1] to [Pr.90], [Pr.95] are checked with the following timing.

- When the "PLC READY signal [Y0]" output from the PLC CPU to the Simple Motion module changes from OFF to ON.
- When the positioning test of GX Works2 is executed.

REMARK

"High-level positioning control" is carried out in combination with the "major positioning control".
Refer to the "major positioning control" parameter settings for details on the parameters required for "high-level positioning control".

5.1.3 Setting items for HPR parameters

When carrying out "HPR control", the "HPR parameters" must be set. The setting items for the "HPR parameters" are shown below.
The "HPR parameters" are set for each axis.
Refer to Chapter 8 "HPR control" for details on the "HPR control", and refer to Section 5.2 "List of parameters" for details on each setting item.

HPR parameters \ HPR control			Machine HPR control						Fast HPR control
			Proximity dog method	Count method 1)	Count method 2)	Data set method	Scale origin signal detection method	Driver HPR method	
HPR basic parameters	[Pr.43]	HPR method							–
	[Pr.44]	HPR direction	◎	◎	◎	◎	◎	○ (Note-1)	–
	[Pr.45]	HP address	◎	◎	◎	◎	◎	◎	◎
	[Pr.46]	HPR speed	◎	◎	◎	–	◎	–	◎
	[Pr.47]	Creep speed	◎	◎	◎	–	◎	–	–
	[Pr.48]	HPR retry	R	R	R	–	–	–	–
HPR detailed parameters	[Pr.50]	Setting for the movement amount after proximity dog ON	–	◎	◎	–	–	–	–
	[Pr.51]	HPR acceleration time selection	◎	◎	◎	–	◎	–	◎
	[Pr.52]	HPR deceleration time selection	◎	◎	◎	–	◎	–	◎
	[Pr.53]	HP shift amount	S	S	S	–	S	–	–
	[Pr.54]	HPR torque limit value	○	○	○	–	○	–	◎
	[Pr.55]	Operation setting for incompletion of HPR	○	○	○	○	○	○	–
	[Pr.56]	Speed designation during HP shift	S	S	S	–	S	–	–
	[Pr.57]	Dwell time during HPR retry	R	R	R	–	–	–	–

◎ : Always set
○ : Set as required
– : Setting not required (When the value is the default value or within the setting range, there is no problem.)
R : Set when using the "13.2.1 HPR retry function" ("–" when not set)
S : Set when using the "13.2.2 HP shift function" ("–" when not set)
(Note-1): The HPR operation follows the HPR direction set in the driver and does not refer to "[Pr.44] HPR direction". However, "[Pr.44] HPR direction" must be set when using the backlash compensation function. When the positioning is executed in the reverse direction against "[Pr.44] HPR direction", the backlash compensation is executed in the axis operation such as positioning after the driver HPR. Set the same direction to "[Pr.44] HPR direction" of the Simple Motion module and the last HPR direction of the driver.

■ Checking the HPR parameters

[Pr.43] to [Pr.57] are checked with the following timing.

- When the "PLC READY signal [Y0]" output from the PLC CPU to the Simple Motion module changes from OFF to ON.
- When the positioning test of GX Works2 is executed.

5.1.4 Setting items for expansion parameters

The setting items for the "expansion parameters" are shown below. The "expansion parameters" are set for each axis.
Refer to "Section 2" for details on the each control, and refer to Section 5.2 "List of parameters" for details on each setting item.

Expansion parameter		Related sub function
[Pr.91]	Optional data monitor: Data type setting 1	14.11
[Pr.92]	Optional data monitor: Data type setting 2	
[Pr.93]	Optional data monitor: Data type setting 3	
[Pr.94]	Optional data monitor: Data type setting 4	
[Pr.96]	Operation cycle setting	—
[Pr.97]	SSCNET setting	—
[Pr.114]	External command signal compensation valid/invalid setting	—
[Pr.135]	Position command error check threshold	14.15
[Pr.136]	Deviation counter error check threshold	

5.1.5 Setting items for servo parameters

The servo parameters are used to control the servo motor and the data that is determined by the specification of the servo amplifier being used.
The setting item is different depending on the servo amplifier being used.
Refer to Section 5.2.8 "Servo parameters" for details.

Servo parameter		Remark
[Pr.100]	Servo series	Set the servo series connected to Simple Motion module.
PA01 to	PA group	Setting items are different according to the servo series.
PB01 to	PB group	
PC01 to	PC group	
PD01 to	PD group	
PE01 to	PE group	
PS01 to	PS group	
PF01 to	PF group	
Po01 to	Po group	
PL01 to	PL group	

5.1.6 Setting items for positioning data

Positioning data must be set for carrying out any "major positioning control". The table below lists the items to be set for producing the positioning data.
One to 600 positioning data items can be set for each axis.
For details of the major positioning controls, refer to Chapter 9 "Major Positioning Control". For details of the individual setting items, refer to Section 5.3 "List of positioning data".

Positioning data \ Major positioning control			Position control			1 to 4 axis speed control	Speed-position switching control	Position-speed switching control	Other control				
			1-axis linear control 2/3/4-axis linear interpolation control	1-axis fixed-feed control 2/3/4-axis fixed-feed control	2-axis circular interpolation control				NOP instruction	Current value changing	JUMP instruction	LOOP	LEND
[Da.1]	Operation pattern	Independent positioning control (Positioning complete)	◎	◎	◎	◎	◎	◎	–	◎	–	–	–
		Continuous positioning control	◎	◎	◎	×	◎	×	–	◎	–	–	–
		Continuous path control	◎	×	◎	×	×	×	–	×	–	–	–
[Da.2]	Control method		Linear 1 Linear 2 Linear 3 Linear 4 *	Fixed-feed 1 Fixed-feed 2 Fixed-feed 3 Fixed-feed 4	Circular sub Circular right Circular left *	Forward run speed 1 Reverse run speed 1 Forward run speed 2 Reverse run speed 2 Forward run speed 3 Reverse run speed 3 Forward run speed 4 Reverse run speed 4	Forward run speed/ position Reverse run speed/ position	Forward run position/ speed Reverse run position/ speed	NOP	Current value changing	JUMP instruction	LOOP	LEND
[Da.3]	Acceleration time No.		◎	◎	◎	◎	◎	◎	–	–	–	–	–
[Da.4]	Deceleration time No.		◎	◎	◎	◎	◎	◎	–	–	–	–	–
[Da.5]	Axis to be interpolated QD77MS2 QD77MS4		◎: 2 axes –: 1 axis, 3 axes, 4 axes				–	–	–	–	–	–	–
[Da.6]	Positioning address/ movement amount		◎	◎	◎	–	◎	◎	–	New address	–	–	–
[Da.7]	Arc address		–	–	◎	–	–	–	–	–	–	–	–
[Da.8]	Command speed		◎	◎	◎	◎	◎	◎	–	–	–	–	–
[Da.9]	Dwell time/JUMP destination positioning data No.		○	○	○	–	○	○	–	–	JUMP destination positioning data No.	–	–
[Da.10]	M code/Condition data No./Number of LOOP to LEND repetitions		○	○	○	○	○	○	–	○	JUMP condition data No.	Number of LOOP to LEND repetitions	–

◎ : Always set
○ : Set as required ("–" when not required)
× : Setting not possible (If set, the error "Continuous path control not possible" (error code: 516) will occur at start.)
– : Setting not required (When the value is the default value or within the setting range, there is no problem.)
* : Two control systems are available: the absolute (ABS) system and incremental (INC) system.

Major positioning control / Positioning data		Position control				Other control						
		1-axis linear control 2/3/4-axis linear interpolation control	1-axis fixed-feed control 2/3/4-axis fixed-feed control	2-axis circular interpolation control	1 to 4 axis speed control	Speed-position switching control	Position-speed switching control	NOP instruction	Current value changing	JUMP instruction	LOOP	LEND
[Da.20]	Axis to be interpolated 1 QD77MS16	◎: 2 axes, 3 axes, 4 axes –: 1 axis				–	–	–	–	–	–	–
[Da.21]	Axis to be interpolated 2 QD77MS16	◎: 3 axes, 4 axes –: 1 axis, 2 axes				–	–	–	–	–	–	–
[Da.22]	Axis to be interpolated 3 QD77MS16	◎: 4 axes –: 1 axis, 2 axes, 3 axes				–	–	–	–	–	–	–

◎ : Always set
○ : Set as required ("–" when not required)
× : Setting not possible (If set, the error "Continuous path control not possible" (error code: 516) will occur at start.)
– : Setting not required (When the value is the default value or within the setting range, there is no problem.)
✻ : Two control systems are available: the absolute (ABS) system and incremental (INC) system.

■ Checking the positioning data

[Da.1] to [Da.10], [Da.20] to [Da.22] are checked at the following timings:

- Startup of a positioning operation

5.1.7 Setting items for block start data

The "block start data" must be set when carrying out "high-level positioning control".
The setting items for the "block start data" are shown below.
Up to 50 points of "block start data" can be set for each axis.
Refer to Chapter 10 "High-Level Positioning Control" for details on the "high-level positioning control", and to Section 5.4 "List of block start data" for details on each setting item.

High-level positioning control / Block start data		Block start (Normal start)	Condition start	Wait start	Simultaneous start	Repeated start (FOR loop)	Repeated start (FOR condition)
[Da.11]	Shape (end/continue)	○	○	○	○	○	○
[Da.12]	Start data No.	○	○	○	○	○	○
[Da.13]	Special start instruction	–	○	○	○	○	○
[Da.14]	Parameter	–	○	○	○	○	○

○ : Set as required ("–" when not required)
– : Setting not required (When the value is the default value or within the setting range, there is no problem.)

■ Checking the block start data

[Da.11] to [Da.14] are checked with the following timing.

- When "Block start data" starts

5.1.8 Setting items for condition data

When carrying out "high-level positioning control" or using the JUMP instruction in the "major positioning control", the "condition data" must be set as required. The setting items for the "condition data" are shown below.
Up to 10 "condition data" items can be set for each axis.
Refer to Chapter 10 "High-Level Positioning Control" for details on the "high-level positioning control", and to Section 5.5 "List of condition data" for details on each setting item.

Control / Condition data		Major positioning control		High-level positioning control					
		Other than JUMP instruction	JUMP instruction	Block start (Normal start)	Condition start	Wait start	Simul-taneous start	Repeated start (FOR loop)	Repeated start (FOR condition)
[Da.15]	Condition target	–	○	–	○	○	○	–	○
[Da.16]	Condition operator	–	○	–	○	○	○	–	○
[Da.17]	Address	–	△	–	△	△	–	–	△
[Da.18]	Parameter 1	–	○	–	○	○	△	–	○
[Da.19]	Parameter 2	–	△	–	△	△	△	–	△
[Da.23]	Number of simultaneous starting axes QD77MS16	–	–	–	–	–	○	–	–
[Da.24]	Simultaneous starting axis No.1 QD77MS16	–	–	–	–	–	○	–	–
[Da.25]	Simultaneous starting axis No.2 QD77MS16	–	–	–	–	–	○	–	–
[Da.26]	Simultaneous starting axis No.3 QD77MS16	–	–	–	–	–	○	–	–

○ : Set as required ("–" when not required)
△ : Setting limited
– : Setting not required (When the value is the default value or within the setting range, there is no problem.)

■ Checking the condition data

[Da.15] to [Da.19], [Da.23] to [Da.26] are checked with the following timing.

- When "Block start data" starts
- When "JUMP instruction" starts

5.1.9 Types and roles of monitor data

The monitor data area in the buffer memory stores data relating to the operating state of the positioning system, which are monitored as required while the positioning system is operating.
The following data are available for monitoring.

- System monitoring:

  Monitoring of the specification and operation history of Simple Motion module (system monitor data [Md.1] to [Md.19], [Md.50] to [Md.59], [Md.61], [Md.130] to [Md.135])

- Axis operation monitoring:

  Monitoring of the current position and speed, and other data related to the movements of axes (axis monitor data [Md.20] to [Md.48], [Md.100] to [Md.116], [Md.120] to [Md.127], [Md.500], [Md.502])

[1] Monitoring the system

■ Monitoring the positioning system operation history

Monitoring details			Corresponding item	
Whether the system is in the test mode or not			[Md.1]	In test mode flag
History of data that started an operation	Start information		[Md.3]	Start information
	Start No.		[Md.4]	Start No.
	Start	Year: month	[Md.54]	Start Year: month
		Day: hour	[Md.5]	Start Day: hour
		Minute: second	[Md.6]	Start Minute: second
	Error upon starting		[Md.7]	Error judgment
	Pointer No. next to the pointer No. where the latest history is stored		[Md.8]	Start history pointer
History of all errors	Axis in which the error occurred		[Md.9]	Axis in which the error occurred
	Axis error No.		[Md.10]	Axis error No.
	Servo alarm		[Md.57]	Servo alarm
	Driver operation alarm number		[Md.61]	Driver operation alarm number
	Axis error occurrence	Year: month	[Md.55]	Axis error occurrence (Year: month)
		Day: hour	[Md.11]	Axis error occurrence (Day: hour)
		Minute: second	[Md.12]	Axis error occurrence (Minute: second)
	Pointer No. next to the pointer No. where the latest history is stored		[Md.13]	Error history pointer

Monitoring details			Corresponding item	
History of all warnings	Axis in which the warning occurred		[Md.14]	Axis in which the warning occurred
	Axis warning No.		[Md.15]	Axis warning No.
	Servo warning		[Md.58]	Servo warning
	Axis warning occurrence	Year: month	[Md.56]	Axis warning occurrence (Year: month)
		Day: hour	[Md.16]	Axis warning occurrence (Day: hour)
		Minute: second	[Md.17]	Axis warning occurrence (Minute: second)
	Pointer No. next to the pointer No. where the latest history is stored		[Md.18]	Warning history pointer
Number of write accesses to the flash ROM after the power is switched ON	Number of write accesses to flash ROM		[Md.19]	Number of write accesses to flash ROM
Forced stop input signal (EMI) turn ON/OFF	Forced stop input signal (EMI) information		[Md.50]	Forced stop input
Monitor whether the system is in amplifier-less operation			[Md.51]	Amplifier-less operation mode status
Monitor the detection status of axis that set communication between amplifiers			[Md.52]	Communication between amplifiers axes searching flag
Monitor the connect/disconnect status of SSCNET communication			[Md.53]	SSCNET control status
Monitor the first five digits of product information			[Md.130]	OS version
Monitor the RUN status of digital oscilloscope			[Md.131]	Digital oscilloscope running flag
Monitor the current operation cycle.			[Md.132]	Operation cycle setting
Monitor whether the operation cycle time exceeds operation cycle.			[Md.133]	Operation cycle over flag
Monitor the time that took for operation every operation cycle.			[Md.134]	Operation time
Monitor the maximum value of operation time after each module's power supply ON.			[Md.135]	Maximum operation time
Store the module information			[Md.59]	Module information

[2] Monitoring the axis operation state

■ Monitoring the position

Monitor details	Corresponding item
Monitor the current feed machine value	[Md.21] Feed machine value
Monitor the current "command position value"	[Md.20] Command position value
Monitor the current target value	[Md.32] Target value

■ Monitoring the speed

Monitor details				Corresponding item
Monitor the current speed	During independent axis control		Indicates the speed of each axis	[Md.22] Speed command
	During interpolation control	When "0: Composite speed" is set for "[Pr.20] Interpolation speed designation method"	Indicates the composite speed	
		When "1: Reference axis speed" is set for "[Pr.20] Interpolation speed designation method"	Indicates the reference axis speed	
	Monitor "[Da.8] Command speed" currently being executed.			[Md.27] Current speed
	Constantly indicates the speed of each axis			[Md.28] Axis speed command
Monitor the current target speed				[Md.33] Target speed
Monitor the command speed at speed control mode or continuous operation to torque control mode in the speed-torque control				[Md.122] Speed during command

■ Monitoring the status of servo amplifier

Monitor details	Corresponding item
Monitor the real current value (command position value - deviation counter).	[Md.101] Actual position value
Monitor the pulse droop.	[Md.102] Deviation counter value
Monitor the motor speed of servo motor.	[Md.103] Motor rotation speed
Monitor the current value of servo motor.	[Md.104] Motor current value
Monitor the software No. of servo amplifier.	[Md.106] Servo amplifier software No.
Monitor the parameter No. that an error occurred.	[Md.107] Parameter error No.
Monitor the status (servo status) of servo amplifier.	[Md.108] Servo status
	[Md.125] Servo status3
	[Md.126] Servo status4
	[Md.127] Servo status5
	[Md.500] Servo status7
• Monitor the percentage of regenerative power to permissible regenerative value. • Monitor the content of "[Pr.91] Optional data monitor: Data type setting 1" at optional data monitor data type setting.	[Md.109] Regenerative load ratio/Optional data monitor output 1
• Monitor the continuous effective load current. • Monitor the content of "[Pr.92] Optional data monitor: Data type setting 2" at optional data monitor data type setting.	[Md.110] Effective load torque/Optional data monitor output 2
• Monitor the maximum generated torque. • Monitor the content of "[Pr.93] Optional data monitor: Data type setting 3" at optional data monitor data type setting.	[Md.111] Peak torque ratio/Optional data monitor output 3
Monitor the content of "[Pr.94] Optional data monitor: Data type setting 4" at optional data monitor data type setting.	[Md.112] Optional data monitor output 4
Monitor the status of semi closed loop control/fully closed loop control.	[Md.113] Semi/Fully closed loop status
Monitor the alarm of servo amplifier.	[Md.114] Servo alarm
Monitor the option information of encoder.	[Md.116] Encoder option information
Monitor the driver operation alarm number.	[Md.502] Driver operation alarm number

■ Monitoring the state

Monitor details	Corresponding item	
Monitor the axis operation state	[Md.26]	Axis operation status
Monitor the latest error code that occurred with the axis	[Md.23]	Axis error No.
Monitor the latest warning code that occurred with the axis	[Md.24]	Axis warning No.
Monitor the external input/output signal and flag	[Md.30]	External input signal
	[Md.31]	Status
Monitor the valid M codes	[Md.25]	Valid M code
Monitor whether the speed is being limited	[Md.39]	In speed limit flag
Monitor whether the speed is being changed	[Md.40]	In speed change processing flag
Monitor the "start data" point currently being executed	[Md.43]	Start data pointer being executed
Monitor the "positioning data No." currently being executed	[Md.44]	Positioning data No. being executed
Monitor the remaining number of repetitions (special start)	[Md.41]	Special start repetition counter
Monitor the remaining number of repetitions (control system)	[Md.42]	Control system repetition counter
Monitor the block No.	[Md.45]	Block No. being executed
Monitor the current torque limit value	[Md.35]	Torque limit stored value/forward torque limit stored value
	[Md.120]	Reverse torque limit stored value
Monitor the command torque at torque control mode or continuous operation to torque control mode in the speed-torque control.	[Md.123]	Torque during command
Monitor the switching status of control mode.	[Md.124]	Control mode switching status
Monitor the "instruction code" of the special start data when using special start	[Md.36]	Special start data instruction code setting value
Monitor the "instruction parameter" of the special start data when using special start	[Md.37]	Special start data instruction parameter setting value
Monitor the "start data No." of the special start data when using special start	[Md.38]	Start positioning data No. setting value
Monitor the "positioning data No." executed last	[Md.46]	Last executed positioning data No.
Monitor the positioning data currently being executed	[Md.47]	Positioning data being executed
Monitor the movement amount after the current position control switching when using "speed-position switching control".	[Md.29]	Speed-position switching control positioning movement amount
Monitor switching from the constant speed status or acceleration status to the deceleration status during position control whose operation pattern is "Positioning complete"	[Md.48]	Deceleration start flag
Monitor the movement amount from proximity dog ON to machine HPR completion.	[Md.34]	Movement amount after proximity dog ON
Monitor the distance that travels to zero point after stop once at HPR.	[Md.100]	HPR re-travel value

5.1.10 Types and roles of control data

Operation of the positioning system is achieved through the execution of necessary controls. (Data required for controls are given through the default values when the power is switched ON, which can be modified as required by the sequence program.) Items that can be controlled are described below.

- Controlling the system data :

  Setting and resetting "setting data" of Simple Motion module (system control data [Cd.1], [Cd.2], [Cd.47])

- Controlling the operation :

  Setting operation parameters, changing speed during operation, interrupting or restarting operation, etc. (system control data [Cd.41], [Cd.42], [Cd.44], [Cd.102], [Cd.137], [Cd.158], axis control data [Cd.3] to [Cd.40], [Cd.43], [Cd.45], [Cd.46], [Cd.100], [Cd.101], [Cd.108], [Cd.112], [Cd.113], [Cd.130] to [Cd.133], [Cd.136] to [Cd.154], [Cd.180] to [Cd.183])

[1] Controlling the system data

■ Setting and resetting the setting data

Control details	Controlled data item	
Write setting data from buffer memory to flash ROM.	[Cd.1]	Flash ROM write request
Reset (initialize) parameters.	[Cd.2]	Parameter initialization request
Set initial value of QD75MH in setting data.	[Cd.47]	QD75MH initial value setting request

[2] Controlling the operation

■ Controlling the operation

Control details	Corresponding item	
Set which positioning to execute (start No.).	[Cd.3]	Positioning start No.
Clear (reset) the axis error ([Md.23]) and warning ([Md.24]).	[Cd.5]	Axis error reset
Issue instruction to restart (When axis operation is stopped).	[Cd.6]	Restart command
Stop axis in control.	[Cd.180]	Axis stop QD77MS16
Execute start request of JOG operation or inching operation.	[Cd.181]	Forward run JOG start QD77MS16
	[Cd.182]	Reverse run JOG start QD77MS16
Execute pre-reading at positioning start.	[Cd.183]	Execution prohibition flag QD77MS16
Set start point No. for executing block start.	[Cd.4]	Positioning starting point No.
Stop continuous control.	[Cd.18]	Interrupt request during continuous operation
Set number of simultaneous starting axes and target axis.	[Cd.43]	Simultaneous starting axis QD77MS16
Set axis 1 start data Nos. for axes that start up simultaneously.	[Cd.30]	Simultaneous starting axis start data No. (axis 1 start data No.) QD77MS2 QD77MS4
Set start data No. of own axis at multiple axes simultaneous starting.		Simultaneous starting own axis start data No. QD77MS16
Set axis 2 start data Nos. for axes that start up simultaneously.	[Cd.31]	Simultaneous starting axis start data No. (axis 2 start data No.) QD77MS2 QD77MS4
Set start data No.1 for axes that start up simultaneously.		Simultaneous starting axis start data No.1 QD77MS16
Set axis 3 start data Nos. for axes that start up simultaneously.	[Cd.32]	Simultaneous starting axis start data No. (axis 3 start data No.) QD77MS4
Set start data No.2 for axes that start up simultaneously.		Simultaneous starting axis start data No.2 QD77MS16
Set axis 4 start data Nos. for axes that start up simultaneously.	[Cd.33]	Simultaneous starting axis start data No. (axis 4 start data No.) QD77MS4
Set start data No.3 for axes that start up simultaneously.		Simultaneous starting axis start data No.3 QD77MS16
Specify write destination for teaching results.	[Cd.38]	Teaching data selection
Specify data to be taught.	[Cd.39]	Teaching positioning data No.
Set the status of the external input signal (upper/lower limit switch signal, proximity dog signal, stop signal).	[Cd.44]	External input signal operation device
Set the information of the forced stop to the buffer memory.	[Cd.158]	Forced stop input

■ Controlling operation per step

Control details	Corresponding item	
Stop positioning operation after each operation.	[Cd.35]	Step valid flag
Set unit to carry out step.	[Cd.34]	Step mode
Continuous operation from stopped step.	[Cd.36]	Step start information

■ Controlling the speed

Control details	Corresponding item	
Set new speed when changing speed during operation.	[Cd.14]	New speed value
Issue instruction to change speed in operation to [Cd.14] value. (Only during positioning operation and JOG operation).	[Cd.15]	Speed change request
Change positioning operation speed between 1 and 300% range.	[Cd.13]	Positioning operation speed override
Set inching movement amount.	[Cd.16]	Inching movement amount
Set JOG speed.	[Cd.17]	JOG speed
When changing acceleration time during speed change, set new acceleration time.	[Cd.10]	New acceleration time value
When changing deceleration time during speed change, set new deceleration time.	[Cd.11]	New deceleration time value
Set acceleration/deceleration time validity during speed change.	[Cd.12]	Acceleration/deceleration time change value during speed change, enable/disable

■ Change operation mode

Control details	Corresponding item	
Change operation mode.	[Cd.137]	Amplifier-less operation mode switching request

■ Making settings related to operation

Control details	Corresponding item	
Turn M code ON signal OFF.	[Cd.7]	M code OFF request
Set new value when changing current value.	[Cd.9]	New position value
Validate switching signal set in "[Cd.45] Speed-position switching device selection".	[Cd.24]	Speed-position switching enable flag
Change movement amount for position control during speed-position switching control (INC mode).	[Cd.23]	Speed-position switching control movement amount change register
Validate switching signal set in "[Cd.45] Speed-position switching device selection".	[Cd.26]	Position-speed switching enable flag
Change speed for speed control during position-speed switching control.	[Cd.25]	Position-speed switching control speed change register
Set up a flag when target position is changed during positioning.	[Cd.29]	Target position change request flag
Set new positioning address when changing target position during positioning.	[Cd.27]	Target position change value(New address)
Set new speed when changing target position during positioning.	[Cd.28]	Target position change value(New speed)
Set absolute (ABS) moving direction in degrees.	[Cd.40]	ABS direction in degrees
Set manual pulse generator operation validity.	[Cd.21]	Manual pulse generator enable flag
Set scale per pulse of number of input pulses from manual pulse generator.	[Cd.20]	Manual pulse generator 1 pulse input magnification
Change HPR request flag from "ON to OFF".	[Cd.19]	HPR request flag OFF request
Validate external command signal.	[Cd.8]	External command valid

Control details		Corresponding item	
Set "same setting/individual setting" of the forward torque limit value or reverse torque limit value in the torque change function.		[Cd.112]	Torque change function switching request
Change "[Md.35] Torque limit stored value/forward torque limit stored value".		[Cd.22]	New torque value/forward new torque value
Change "[Md.120] Reverse torque limit stored value".		[Cd.113]	New reverse torque value
Set whether "[Md.48] Deceleration start flag" is valid or invalid		[Cd.41]	Deceleration start flag valid
Set the stop command processing for deceleration stop function (deceleration curve re-processing/deceleration curve continuation)		[Cd.42]	Stop command processing for deceleration stop selection
Set the device used for speed-position switching.		[Cd.45]	Speed-position switching device selection
Switch speed-position control.		[Cd.46]	Speed-position switching command
Turn the servo OFF for each axis.		[Cd.100]	Servo OFF command
Set torque limit value		[Cd.101]	Torque output setting value
Set the connect/disconnect of SSCNET communication.		[Cd.102]	SSCNET control command
Set whether gain switching is execution or not.		[Cd.108]	Gain switching command flag
Set the semi closed loop control/fully closed loop control.		[Cd.133]	Semi/Fully closed loop switching request
Set the PI-PID switching to servo amplifier.		[Cd.136]	PI-PID switching request
Speed-torque control	Switch the control mode.	[Cd.138]	Control mode switching request
	Set the control mode to switch.	[Cd.139]	Control mode setting
	Set the command speed during speed control mode.	[Cd.140]	Command speed at speed control mode
	Set the acceleration time during speed control mode.	[Cd.141]	Acceleration time at speed control mode
	Set the deceleration time during speed control mode.	[Cd.142]	Deceleration time at speed control mode
	Set the command torque during torque control mode.	[Cd.143]	Command torque at torque control mode
	Set the time constant at driving of torque control mode.	[Cd.144]	Torque time constant at torque control mode (Forward direction)
	Set the time constant at regeneration of torque control mode.	[Cd.145]	Torque time constant at torque control mode (Negative direction)
	Set the speed limit value during torque control mode.	[Cd.146]	Speed limit value at torque control mode
	Set the command speed during continuous operation to torque control mode.	[Cd.147]	Speed limit value at continuous operation to torque control mode
	Set the acceleration time during continuous operation to torque control mode.	[Cd.148]	Acceleration time at continuous operation to torque control mode
	Set the deceleration time during continuous operation to torque control mode.	[Cd.149]	Deceleration time at continuous operation to torque control mode
	Set the target torque during continuous operation to torque control mode.	[Cd.150]	Target torque at continuous operation to torque control mode
	Set the time constant at driving of continuous operation to torque control mode.	[Cd.151]	Torque time constant at continuous operation to torque control mode (Forward direction)
	Set the time constant at regeneration of continuous operation to torque control mode.	[Cd.152]	Torque time constant at continuous operation to torque control mode (Negative direction)
	Set the switching conditions for switching to continuous operation to torque control mode.	[Cd.153]	Control mode auto-shift selection
	Set the condition value when "[Cd.153] Control mode auto-shift selection" is set.	[Cd.154]	Control mode auto-shift parameter

5.2 List of parameters

The setting items of the setting data are explained in this section.

• Guide to buffer memory address

In the buffer memory address, "n" in "1+150n", etc. indicates a value corresponding to axis No. such as the following table.

Axis No.	n	Axis No.	n	Axis No.	n	Axis No.	n
1	0	5	4	9	8	13	12
2	1	6	5	10	9	14	13
3	2	7	6	11	10	15	14
4	3	8	7	12	11	16	15

(Note-1): Calculate as follows for the buffer memory address corresponding to each axis.

(Example) For axis No. 16

1+150n ([Pr.4] Unit magnification (AM))=1+150×15=2251

(Note-2): The range from axis No.1 to 2 (n=0 to 1) is valid in the QD77MS2.

(Note-3): The range from axis No.1 to 4 (n=0 to 3) is valid in the QD77MS4.

For the valid timing of each parameter, refer to "7.1.1 Configuration and roles of QD77MS memory".

5.2.1 Basic parameters 1

Item		Setting value, setting range		Default value	Buffer memory address	
		Value set with GX Works2	Value set with sequence program		QD77MS2 QD77MS4	QD77MS16
[Pr.1] Unit setting		0 : mm	0	3	0+150n	
		1 : inch	1			
		2 : degree	2			
		3 : PLS	3			
Movement amount per pulse	[Pr.2] Number of pulses per rotation (AP) (Unit : PLS)	1 to 200000000	1 to 200000000	20000	2+150n 3+150n	
	[Pr.3] Movement amount per rotation (AL)	The setting value range differs according to the "[Pr.1] Unit setting".		20000	4+150n 5+150n	
	[Pr.4] Unit magnification (AM)	1 : 1 times	1	1	1+150n	
		10 : 10 times	10			
		100 : 100 times	100			
		1000 : 1000 times	1000			
[Pr.7] Bias speed at start		The setting value range differs according to the "[Pr.1] Unit setting".		0	6+150n 7+150n	

n: Axis No.-1

[Pr.1] Unit setting

Set the unit used for defining positioning operations. Choose from the following units depending on the type of the control target: mm, inch, degree, or PLS. Different units can be defined for different axes.

(Example) Different units (mm, inch, degree, and PLS) are applicable to different systems:

- mm or inch..... X-Y table, conveyor (Select mm or inch depending on the machine specifications.)
- degree ..... Rotating body (360 degrees/rotation)
- PLS..... X-Y table, conveyor

∗: When you change the unit, note that the values of other parameters and data will not be changed automatically.
After changing the unit, check if the parameter and data values are within the allowable range.
Set "degree" to exercise speed-position switching control (ABS mode).

[Pr.2] to [Pr.4] Electronic gear (Movement amount per pulse)

Mechanical system value used when the Simple Motion module performs positioning control.
The settings are made using [Pr.2] to [Pr.4].
The electronic gear is expressed by the following equation.

$$\text{Electronic gear} = \frac{\text{[Pr.2] Number of pulses per rotation (AP)}}{\text{[Pr.3] Movement amount per rotation (AL)} \times \text{[Pr.4] Unit magnification (AM)}}$$

∗: When positioning has been performed, an error (mechanical system error) may be produced between the specified movement amount and the actual movement amount. (Refer to Section 13.3.2 "Electronic gear function".)

POINT

(1) Set the electronic gear within the following range.
If the value outside the setting range is set, the error "Outside electronic gear setting range" (error code: 907) will occur.

• Product information is before 150320000000000.

$$0.001 \leq \text{Electronic gear} \left(\frac{AP}{AL \times AM}\right) \leq 20000$$

• Product information is 150320000000000 or later.

$$0.001 \leq \text{Electronic gear} \left(\frac{AP}{AL \times AM}\right) \leq 320000$$

∗: For the movement amount per rotation (AL) which is used for the calculation of the electronic gear above, convert into the unit shown in the "Value set with sequence program" of the table in "[Pr.3] Movement amount per rotation (AL)" and "[Pr.4] Unit magnification (AM)".

(2) The result of below calculation (round up after decimal point) is a minimum pulse when the command position value is updated at follow-up processing. (The movement amount for droop pulse is reflected as the command position value when the droop pulse becomes more than above calculated value in pulse unit of motor end.)

[Pr.2] Number of pulses per rotation (AP) ÷ ([Pr.3] Movement amount per rotation (AL) × [Pr.4] Unit magnification (AM)) [PLS]

Refer to Section 13.8.2 for the follow-up processing.

(Example)
• When an error does not occur
In the case of AP = 4194304 [PLS], AL = 2000000 [× 10^{-5} degree], and AM = 1, the value is within the range as follows.

$$\text{Electronic gear} = \frac{AP}{AL \times AM} = \frac{4194304}{2000000 \times 1} = 2.097152$$

• When an error occurs
In the case of AP = 4194304 [PLS], AL = 10 [× 10^{-1} μm], and AM = 1, the value is out of the range as follows.

$$\text{Electronic gear} = \frac{AP}{AL \times AM} = \frac{4194304}{10 \times 1} = 419430.4$$

[Pr.2] Number of pulses per rotation (AP)

Set the number of pulses required for a complete rotation of the motor shaft.
If you are using the Mitsubishi servo amplifier MR-J4(W)-B/MR-JE-B(F)/MR-J3(W)-B, set the value given as the "resolution per servomotor rotation" in the speed/position detector specifications. When using the Mitsubishi servo amplifier MR-J5(W)-B, refer to "13.3.2 Electronic gear function".

Number of pulses per rotation (AP) = Resolution per servomotor rotation

[Pr.3] Movement amount per rotation (AL), [Pr.4] Unit magnification (AM)

The amount how the workpiece moves with one motor rotation is determined by the mechanical structure.
If the worm gear lead (μm/rev) is PB and the deceleration rate is 1/n, then

Movement amount per rotation (AL) = PB × 1/n

However, the maximum value that can be set for this "movement amount per rotation (AL)" parameter is 20000000.0μm (20m). Set the "movement amount per rotation (AL)" as shown below so that the "movement amount per rotation (AL)" does not exceed this maximum value.

Movement amount per rotation (AL)
= PB × 1/n
= Movement amount per rotation (AL) × Unit magnification (AM)

Note) The unit magnification (AM) is a value of 1, 10, 100 or 1000. If the "PB × 1/n" value exceeds 20000000.0μm (20m), adjust with the unit magnification so that the "movement amount per rotation (AL)" does not exceed 20000000.0μm (20m).

∗1: Refer to Section 13.3.2 "Electronic gear function" information about electric gear.

[Pr.1] setting value	Value set with GX Works2 (unit)	Value set with sequence program (unit)
0 : mm	0.1 to 2000000.0 (μm)	1 to 200000000 ($\times 10^{-1}$μm)
1 : inch	0.00001 to 2000.00000 (inch)	1 to 200000000 ($\times 10^{-5}$inch)
2 : degree	0.00001 to 2000.00000 (degree)	1 to 200000000 ($\times 10^{-5}$degree)
3 : PLS	1 to 200000000 (PLS)	1 to 200000000 (PLS)

[Pr.7] Bias speed at start

Set the bias speed (minimum speed) upon starting. When using a stepping motor, etc., set it to start the motor smoothly. (If the motor speed at start is low, the stepping motor does not start smoothly.)

The specified "bias speed at start" will be valid during the following operations:

- Positioning operation
- HPR operation
- JOG operation

Set the value that the bias speed should not exceed "[Pr.8] Speed limit value".

[Pr.1] setting value	Value set with GX Works2 (unit)	Value set with sequence program (unit)
0 : mm	0.00 to 20000000.00 (mm/min)	0 to 2000000000 ($\times 10^{-2}$mm/min)
1 : inch	0.000 to 2000000.000 (inch/min)	0 to 2000000000 ($\times 10^{-3}$inch/min)
2 : degree	0.000 to 2000000.000 (degree/min) ∗1	0 to 2000000000 ($\times 10^{-3}$degree/min) ∗2
3 : PLS	0 to 1000000000 (PLS/s)	0 to 1000000000 (PLS/s)

∗1: Range of speed limit value when "[Pr.83] Speed control 10 x multiplier setting for degree axis" is set to valid: 0.00 to 20000000.00 (degree/min)

∗2: Range of speed limit value when "[Pr.83] Speed control 10 x multiplier setting for degree axis" is set to valid: 0 to 2000000000 ($\times 10^{-2}$degree/min)

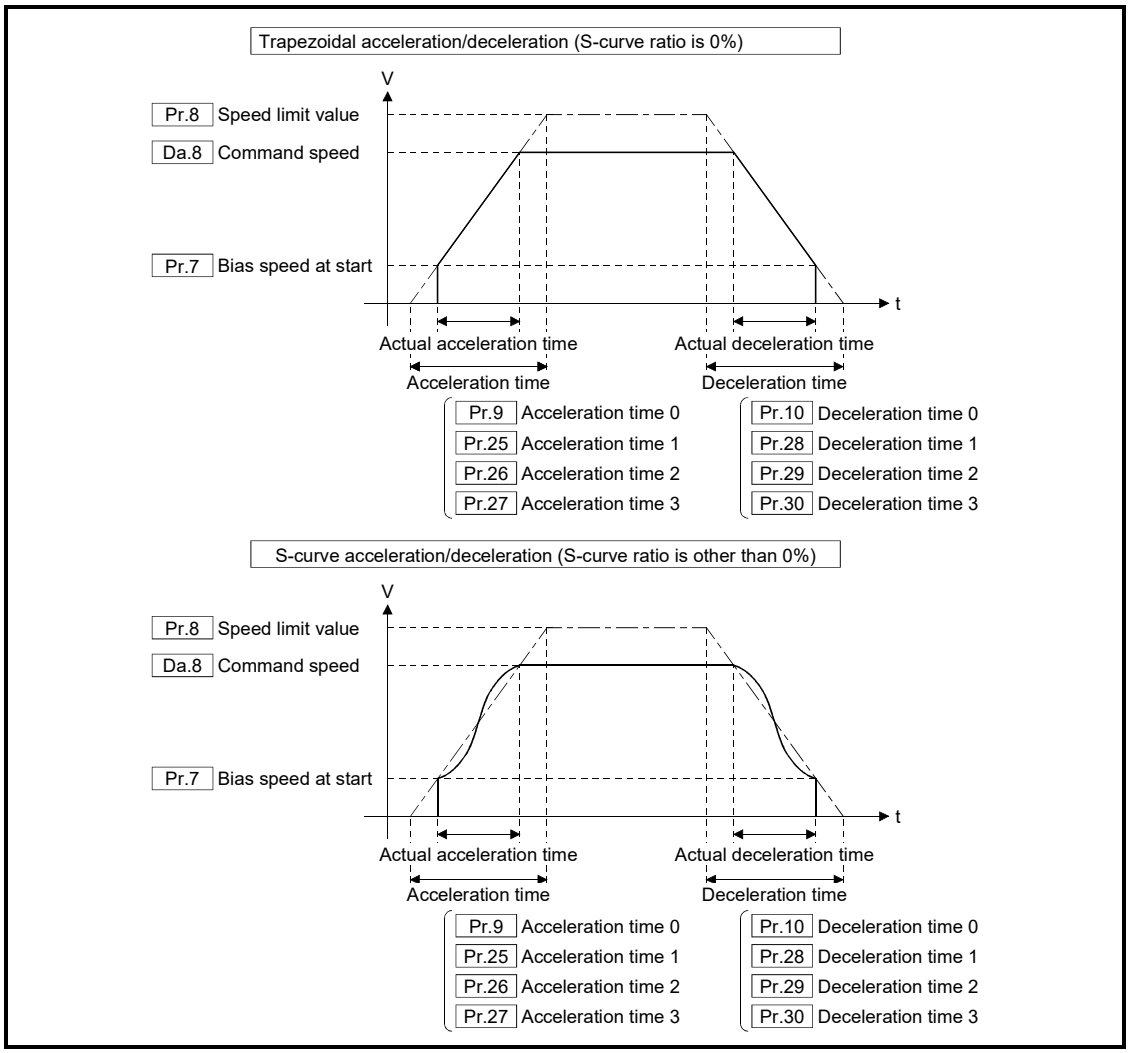

POINT

For the 2-axis or more interpolation control, the bias speed at start is applied by the setting of "[Pr.20] Interpolation speed designation method".

- "0: Composite speed" : Bias speed at start set to the reference axis is applied to the composite command speed.
- "1: Reference axis speed": Bias speed at start is applied to the reference axis.

(1) Precautionary notes

(a) "[Pr.7] Bias speed at start" is valid regardless of motor type. Set "0" when using the motor other than the stepping motor. Otherwise, it may cause vibration or impact even though an error does not occur.

(b) Set "[Pr.7] Bias speed at start" according to the specification of stepping motor driver. If the setting is outside the range, it may cause the following troubles by rapid speed change or overload.
- Stepping motor steps out.
- An error occurs in the stepping motor driver.

(c) In synchronous control, when "[Pr.7] Bias speed at start" is set to the servo input axis, the bias speed at start is applied to the servo input axis. Note that the unexpected operation might be generated to the output axis.

(d) Set "[Pr.7] Bias speed at start" within the following range.

"[Pr.8] Speed limit value" >= "[Pr.46] HPR speed" >= "[Pr.47] Creep speed" >= "[Pr.7] Bias speed at start"

(e) If following data are less than "[Pr.7] Bias speed at start", the warning "Below bias speed" (warning code: 114) will occur, and it will operate at "[Pr.7] Bias speed at start".
- "[Da.8] Command speed" of positioning data
- "[Da.8] Command speed" of next point for continuous path control
- "[Cd.14] New speed value" for speed change function

(f) When using S-curve acceleration/deceleration processing and bias speed at start together, S-curve acceleration/deceleration processing is carried out based on the acceleration/deceleration time set by user, "[Pr.8] Speed limit value" and "[Pr.35] S-curve ratio" (1 to 100%) in the section of acceleration/deceleration from bias speed at start to command speed.

5.2.2 Basic parameters 2

Item	Setting value, setting range		Default value	Buffer memory address	
	Value set with GX Works2	Value set with sequence program		QD77MS2 QD77MS4	QD77MS16
[Pr.8] Speed limit value	The setting range differs depending on the "[Pr.1] Unit setting".		200000	10+150n 11+150n	
[Pr.9] Acceleration time 0	1 to 8388608 (ms)	1 to 8388608 (ms)	1000	12+150n 13+150n	
[Pr.10] Deceleration time 0	1 to 8388608 (ms)	1 to 8388608 (ms)	1000	14+150n 15+150n	

n: Axis No.-1

[Pr.8] Speed limit value

Set the maximum speed during positioning, HPR and speed-torque operations.

[Pr.1] setting value	Value set with GX Works2 (unit)	Value set with sequence program (unit)
0 : mm	0.01 to 20000000.00 (mm/min)	1 to 2000000000 ($\times10^{-2}$mm/min)
1 : inch	0.001 to 2000000.000 (inch/min)	1 to 2000000000 ($\times10^{-3}$inch/min)
2 : degree	0.001 to 2000000.000 (degree/min) ∗1	1 to 2000000000 ($\times10^{-3}$degree/min) ∗2
3 : PLS	1 to 1000000000 (PLS/s)	1 to 1000000000 (PLS/s)

∗1: Range of speed limit value when "[Pr.83] Speed control 10 x multiplier setting for degree axis" is set to valid: 0.01 to 20000000.00 (degree/min).

∗2: Range of speed limit value when "[Pr.83] Speed control 10 x multiplier setting for degree axis" is set to valid: 1 to 2000000000 ($\times10^{-2}$ degree/min)

[Pr.9] Acceleration time 0, [Pr.10] Deceleration time 0

"[Pr.9] Acceleration time 0" specifies the time for the speed to increase from zero to the "[Pr.8] Speed limit value" ("[Pr.31] JOG speed limit value" at JOG operation control).

"[Pr.10] Deceleration time 0" specifies the time for the speed to decrease from the "[Pr.8] Speed limit value" ("[Pr.31] JOG speed limit value" at JOG operation control) to zero.

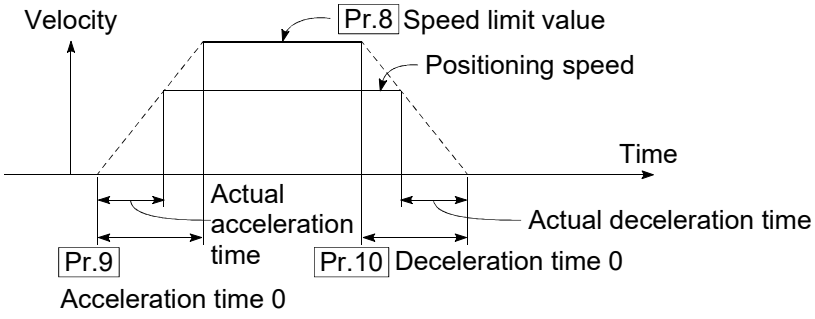

1) If the positioning speed is set lower than the parameter-defined speed limit value, the actual acceleration/deceleration time will be relatively short. Thus, set the maximum positioning speed equal to or only a little lower than the parameter-defined speed limit value.
2) These settings are valid for HPR, positioning and JOG operations.
3) When the positioning involves interpolation, the acceleration/deceleration time defined for the reference axis is valid.

5.2.3 Detailed parameters 1

Item	Setting value, setting range		Default value	Buffer memory address	
	Value set with GX Works2	Value set with sequence program		QD77MS2 QD77MS4	QD77MS16
[Pr.11] Backlash compensation amount	The setting value range differs according to the "[Pr.1] Unit setting".		0	17+150n	
[Pr.12] Software stroke limit upper limit value			2147483647	18+150n	19+150n
[Pr.13] Software stroke limit lower limit value			–2147483648	20+150n	21+150n
[Pr.14] Software stroke limit selection	0: Apply software stroke limit on command position value	0	0	22+150n	
	1: Apply software stroke limit on feed machine value	1			
[Pr.15] Software stroke limit valid/invalid setting	0: Software stroke limit valid during JOG operation, inching operation and manual pulse generator operation	0	0	23+150n	
	1: Software stroke limit invalid during JOG operation, inching operation and manual pulse generator operation	1			
[Pr.16] Command in-position width	The setting value range differs depending on the "[Pr.1] Unit setting".		100	24+150n	25+150n
[Pr.17] Torque limit setting value	1 to 1000 (%)	1 to 1000 (%)	300	26+150n	
[Pr.18] M code ON signal output timing	0: WITH mode	0	0	27+150n	
	1: After mode	1			
[Pr.19] Speed switching mode	0: Standard speed switching mode	0	0	28+150n	
	1: Front-loading speed switching mode	1			
[Pr.20] Interpolation speed designation method	0: Composite speed	0	0	29+150n	
	1: Reference axis speed	1			
[Pr.21] Command position value during speed control	0: Do not update command position value	0	0	30+150n	
	1: Update command position value	1			
	2: Clear command position value to zero	2			

n: Axis No.-1

<table>
<tr><th rowspan="2">Item</th><th colspan="4">Setting value, setting range</th><th rowspan="2">Default value</th><th colspan="2">Buffer memory address</th></tr>
<tr><th colspan="3">Value set with GX Works2</th><th>Value set with sequence program</th><th>QD77MS2
QD77MS4</th><th>QD77MS16</th></tr>
<tr><td>[Pr.22]
Input signal logic selection</td><td colspan="3">b0 Lower limit
b1 Upper limit
b2 Not used
b3 Stop signal
b4 External command/ switching signal
b5 Not used
b6 Proximity dog signal
b7 Not used
b8 Manual pulse generator input (Note-1)
b9 to b15 Not used

0: Negative logic
1: Positive logic

(Note-1): Only the value specified against the axis 1 is valid.</td><td> 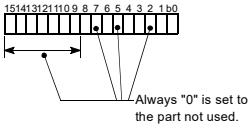 </td><td>0</td><td colspan="2">31+150n</td></tr>
<tr><td rowspan="7">[Pr.80]
External input signal selection</td><td colspan="3">0: External input signal of QD77MS QD77MS2 QD77MS4</td><td>0</td><td rowspan="7">QD77MS2 : 0
QD77MS4 : 0
QD77MS16: 1</td><td colspan="2" rowspan="7">32+150n</td></tr>
<tr><td colspan="3">1: External input signal of servo amplifier</td><td>1</td></tr>
<tr><td colspan="3">2: Buffer memory of QD77MS</td><td>2</td></tr>
<tr><td colspan="3">3: External input signal 1 of QD77MS QD77MS16</td><td>3</td></tr>
<tr><td colspan="3">4: External input signal 2 of QD77MS QD77MS16</td><td>4</td></tr>
<tr><td colspan="3">5: External input signal 3 of QD77MS QD77MS16</td><td>5</td></tr>
<tr><td colspan="3">6: External input signal 4 of QD77MS QD77MS16</td><td>6</td></tr>
<tr><td rowspan="4">[Pr.24]
Manual pulse generator/ Incremental synchronous encoder input selection</td><td colspan="3">0: A-phase/B-phase multiplied by 4</td><td>0</td><td rowspan="4">0</td><td colspan="2" rowspan="4">33</td></tr>
<tr><td colspan="3">1: A-phase/B-phase multiplied by 2</td><td>1</td></tr>
<tr><td colspan="3">2: A-phase/B-phase multiplied by 1</td><td>2</td></tr>
<tr><td colspan="3">3: PLS/SIGN</td><td>3</td></tr>
<tr><td rowspan="2">[Pr.81]
Speed-position function selection</td><td colspan="3">0: Speed-position switching control (INC mode)</td><td>0</td><td rowspan="2">0</td><td colspan="2" rowspan="2">34+150n</td></tr>
<tr><td colspan="3">2: Speed-position switching control (ABS mode)</td><td>2</td></tr>
<tr><td rowspan="3">[Pr.82]
Forced stop valid/invalid selection</td><td colspan="3">0: Valid (External input signal)</td><td>0</td><td rowspan="3">0</td><td colspan="2" rowspan="3">35</td></tr>
<tr><td colspan="3">1: Invalid</td><td>1</td></tr>
<tr><td colspan="3">2: Valid (Buffer memory)</td><td>2</td></tr>
</table>

n: Axis No.-1

[Pr.11] Backlash compensation amount

The error that occurs due to backlash when moving the machine via gears can be compensated.
(When the backlash compensation amount is set, commands equivalent to the compensation amount will be output each time the direction changes during positioning.)

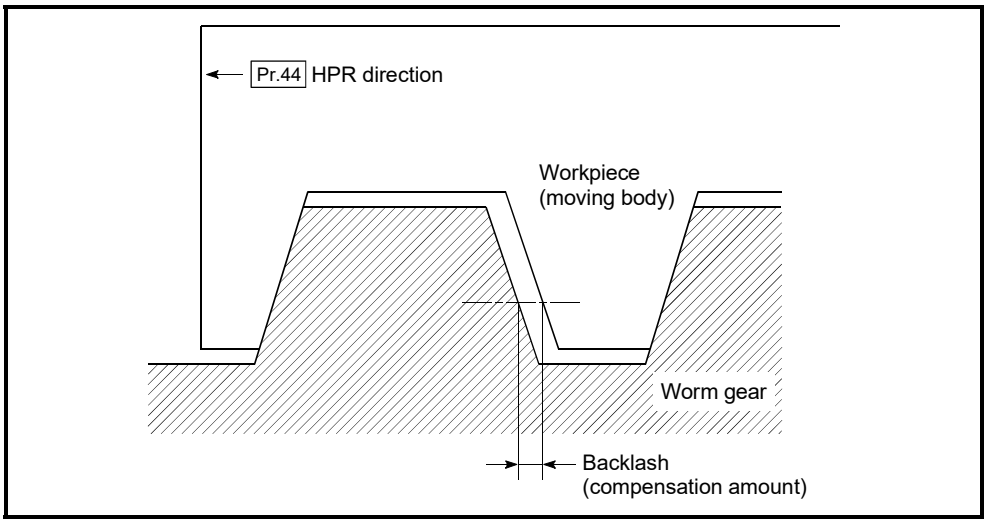

1) The backlash compensation is valid after machine HPR. Thus, if the backlash compensation amount is set or changed, always carry out machine HPR once.
2) "[Pr.2] Number of pulses per rotation (AP)", "[Pr.3] Movement amount per rotation (AL)", "[Pr.4] Unit magnification (AM)" and "[Pr.11] Backlash compensation amount" which satisfies the following (1) can be set up.

• Product information is before 141220000000000.

$$0 \leq \frac{\text{([Pr.11] Backlash compensation amount)} \times \text{([Pr.2] Number of pulses per rotation (AP))}}{\text{([Pr.3] Movement amount per rotation (AL))} \times \text{([Pr.4] Unit magnification (AM))}} (= A) \leq 65535 \text{ (PLS)} \ldots.(1)$$

(round down after decimal point)

• Product information is 141220000000000 or later.

$$0 \leq \frac{\text{([Pr.11] Backlash compensation amount)} \times \text{([Pr.2] Number of pulses per rotation (AP))}}{\text{([Pr.3] Movement amount per rotation (AL))} \times \text{([Pr.4] Unit magnification (AM))}} (= A) \leq 4194303 \text{ (PLS)} \ldots.(1)$$

(round down after decimal point)

The error "Backlash compensation amount error" (error code: 920) occurs when the setting is outside the range of the calculation result of (1).
A servo alarm (error code: 2031, 2035, etc.) may occur by kinds of servo amplifier (servomotor), load inertia moment and the amount of command of a cycle time (Simple Motion module) even if the setting is within the calculation result of (1).

Reduce the setting value of "[Pr.11] Backlash compensation amount" or increase the operation cycle by "[Pr.96] Operation cycle setting" if a servo alarm occurs. Use the value of the following (2) as a measure that a servo alarm does not occur.

$$A \leq \frac{\text{(Motor instantaneous permissible speed (r/min))} \times 1.2 \times \text{(Encoder resolution (PLS/r))} \times \text{(Operation cycle (ms))}}{60(\text{s}) \times 1000 \text{ (ms)}} \text{ (PLS)} \ldots.(2)$$

All the backlash compensation amount is output in one operation cycle.

[Pr.1] setting value	Value set with GX Works2 (unit)	Value set with sequence program (unit) ∗
0 : mm	0 to 6553.5 (μm)	0 to 65535 ($\times 10^{-1}$μm)
1 : inch	0 to 0.65535 (inch)	0 to 65535 ($\times 10^{-5}$inch)
2 : degree	0 to 0.65535 (degree)	0 to 65535 ($\times 10^{-5}$degree)
3 : PLS	0 to 65535 (PLS)	0 to 65535 (PLS)

∗ 0 to 32767 : Set as a decimal
32768 to 65535 : Convert into hexadecimal and set

[Pr.12] Software stroke limit upper limit value

Set the upper limit for the machine's movement range during positioning control.

[Pr.1] setting value	Value set with GX Works2 (unit)	Value set with sequence program (unit)
0 : mm	-214748364.8 to 214748364.7 (μm)	-2147483648 to 2147483647 ($\times 10^{-1}$μm)
1 : inch	-21474.83648 to 21474.83647 (inch)	-2147483648 to 2147483647 ($\times 10^{-5}$inch)
2 : degree	0 to 359.99999 (degree)	0 to 35999999 ($\times 10^{-5}$degree)
3 : PLS	-2147483648 to 2147483647 (PLS)	-2147483648 to 2147483647 (PLS)

[Pr.13] Software stroke limit lower limit value

Set the lower limit for the machine's movement range during positioning control.

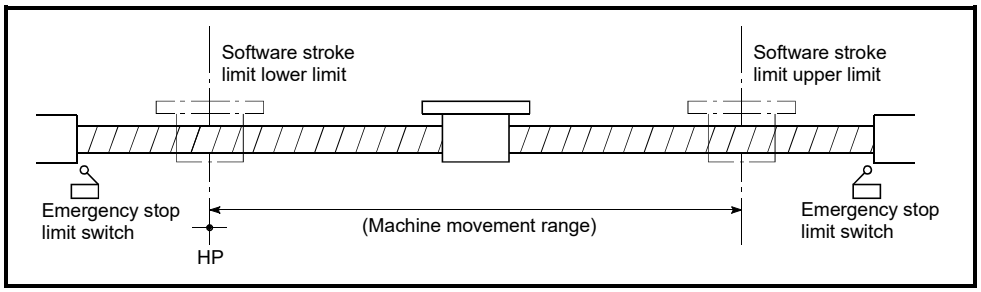

1) Generally, the HP is set at the lower limit or upper limit of the stroke limit.
2) By setting the upper limit value or lower limit value of the software stroke limit, overrun can be prevented in the software. However, an emergency stop limit switch must be installed nearby outside the range.
   To invalidate the software stroke limit, set the setting value to "upper limit value = lower limit value". (If it is within the setting range, the setting value can be anything.)
   When the unit is "degree", the software stroke limit check is invalid during speed control (including the speed control in speed-position and position-speed switching control) or during manual control.

[Pr.14] Software stroke limit selection

Set whether to apply the software stroke limit on the "command position value" or the "feed machine value". The software stroke limit will be validated according to the set value.

To invalidate the software stroke limit, set the setting value to "command position value".

When "2: degree" is set in "[Pr.1] Unit setting", set the setting value of software stroke limit to "command position value".

The error "Software stroke limit selection" (error code: 923) will occur if "feed machine value" is set.

[Pr.15] Software stroke limit valid/invalid setting

Set whether to validate the software stroke limit during JOG/Inching operation and manual pulse generator operation.

[Pr.16] Command in-position width

Set the remaining distance that turns the command in-position ON. The command in-position signal is used as a front-loading signal of the positioning complete signal. When positioning control is started, the "Command in-position flag ([Md.31] Status: b2)" turns OFF, and the "command in-position flag" turns ON at the set position of the command in-position signal.

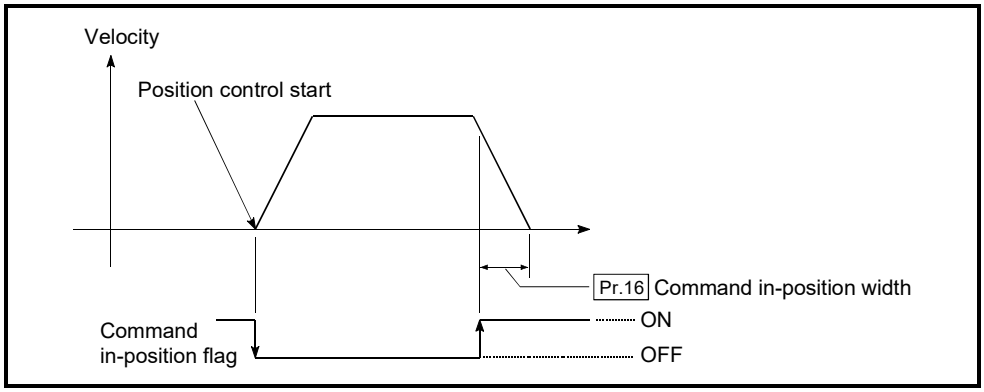

[Pr.1] setting value	Value set with GX Works2 (unit)	Value set with sequence program (unit)
0 : mm	0.1 to 214748364.7 (μm)	1 to 2147483647 ($\times 10^{-1}$μm)
1 : inch	0.00001 to 21474.83647 (inch)	1 to 2147483647 ($\times 10^{-5}$inch)
2 : degree	0.00001 to 21474.83647 (degree)	1 to 2147483647 ($\times 10^{-5}$degree)
3 : PLS	1 to 2147483647 (PLS)	1 to 2147483647 (PLS)

[Pr.17] Torque limit setting value

Set the maximum value of the torque generated by the servomotor as a percentage between 1 and 1000%.

∗ The torque limit function limits the torque generated by the servomotor within the set range.
If the torque required for control exceeds the torque limit value, it is controlled with the set torque limit value.
(Refer to Section 13.4.2 "Torque limit function".)

[Pr.18] M code ON signal output timing

This parameter sets the M code ON signal output timing.
Choose either WITH mode or AFTER mode as the M code ON signal output timing.

[QD77MS4 operation example]

WITH mode ..... An M code is output and the M code ON signal is turned ON when a positioning operation starts.

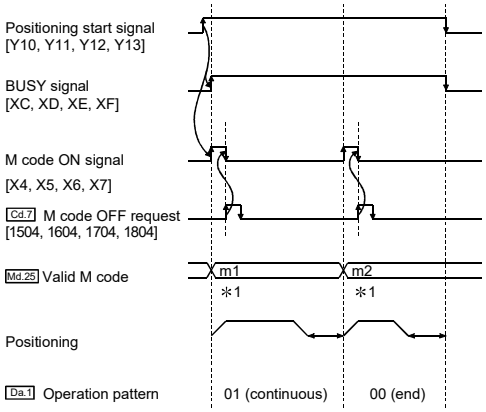

AFTER mode ..... An M code is output and the M code ON signal is turned ON when a positioning operation completes.

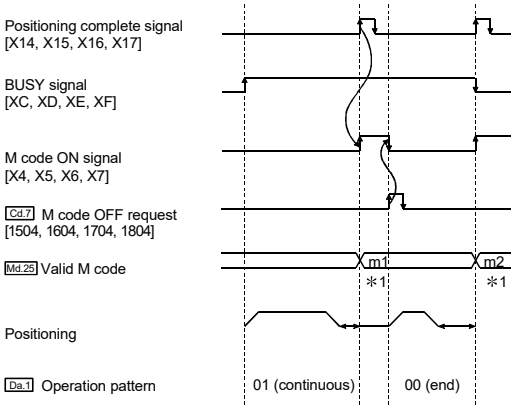

∗1: m1 and m2 indicate set M codes.

(Note): Refer to Section 3.3 for input/output signal of QD77MS16 and Chapter 5 for buffer memory address.

Note: If AFTER mode is used with speed control, an M code will not be output and the M code ON signal will not be turned ON.

An M code is a number between 0 and 65535 that can be assigned to each positioning data ([Da.10]).
The sequence program can be coded to read an M code from the buffer memory address specified by "[Md.25] Valid M code" whenever the M code ON signal turns ON so that a command for the sub work (e.g. clamping, drilling, or tool change) associated with the M code can be issued.

[Pr.19] Speed switching mode

Set whether to switch the speed switching mode with the standard switching or front-loading switching mode.

- Speed of positioning data No.n > Speed of positioning data No.n + 1
  The speed decelerates by deceleration time No. of positioning data No.n + 1.
- Speed of positioning data No.n < Speed of positioning data No.n + 1
  The speed accelerates by acceleration time No. of positioning data No.n + 1.

0 : Standard switching ..... Switch the speed when executing the next positioning data.

1 : Front-loading switching..... The speed switches at the end of the positioning data currently being executed.

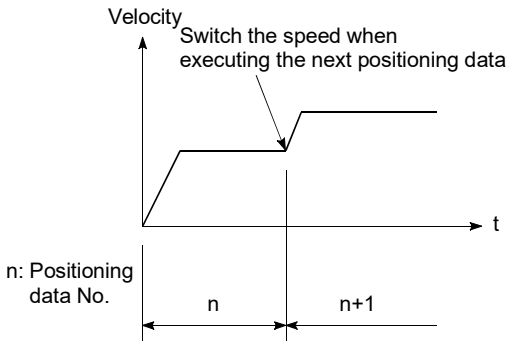

<For standard switching>

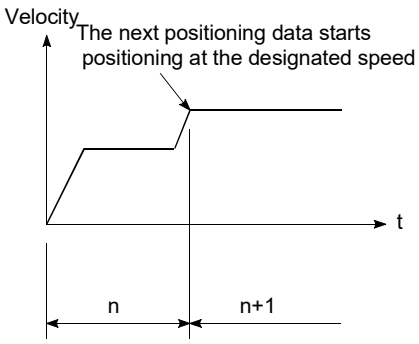

<For front-loading switching>

[Pr.20] Interpolation speed designation method

When carrying out linear interpolation/circular interpolation, set whether to designate the composite speed or reference axis speed.

0: Composite speed ..... The movement speed for the control target is designated, and the speed for each axis is calculated by the Simple Motion module.

1: Reference axis speed ..... The axis speed set for the reference axis is designated, and the speed for the other axis carrying out interpolation is calculated by the Simple Motion module.

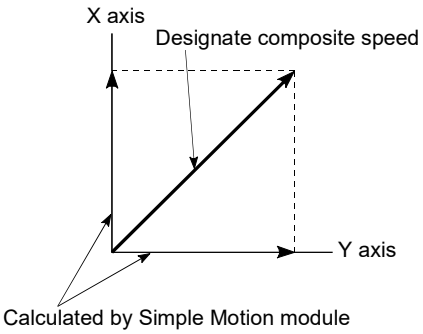

<When composite speed is designated>

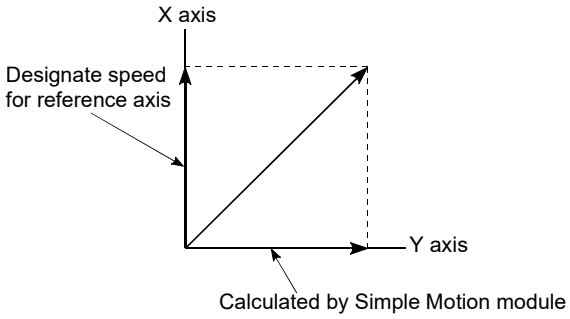

<When reference axis speed is designated>

Note: Always specify the reference axis speed if the 4-axis linear interpolation or 2 to 4 axis speed control has to be performed.
If you specify the composite speed for a positioning operation that involves the 4-axis linear interpolation or 2 to 4 axis speed control, the error "Interpolation mode error" (error code: 523) will occur when the positioning operation is attempted.
For a positioning operation that involves the circular interpolation, specify the composite speed always. If you specify the reference axis speed for a positioning operation that involves the circular interpolation, the error "Interpolation mode error" (error code: 523) will occur when the positioning operation is attempted.

[Pr.21] Command position value during speed control

Specify whether you wish to enable or disable the update of "[Md.20] Command position value" while operations are performed under the speed control (including the speed control in speed-position and position-speed switching control).

0: The update of the command position value is disabled
The command position value will not change. (The value at the beginning of the speed control will be kept.)

1: The update of the command position value is enabled
The command position value will be updated. (The command position value will change from the initial.)

2: The command position value is cleared to zero
The command position value will be set initially to zero and change from zero while the speed control is in effect.

Note1: When the speed control is performed over two to four axes, the choice between enabling and disabling the update of "[Md.20] Command position value" depends on how the reference axis is set.

Note2: Set "1" to exercise speed-position switching control (ABS mode).

[Pr.22] Input signal logic selection

Set the input signal logic that matches the signaling specification of the connected external device, "[Cd.44] External input signal operation device" or external input signal of servo amplifier (upper/lower limit switch, proximity dog).

Negative logic

(1) The current is not flowed through the input signal contact.
  (a) FLS, RLS ..... Limit signal ON
  (b) DOG, DI, STOP .... Invalid
(2) The current is flowed through the input signal contact.
  (a) FLS, RLS ..... Limit signal OFF
  (b) DOG, DI, STOP .... Valid

Positive logic

Opposite the concept of negative logic.

Note1: A mismatch in the signal logic will disable normal operation. Be careful of this when you change from the default value.

Note2: Set the manual pulse generator input logic selection (b8) to axis 1. (Setting of any of axes 2 to 4 is invalid.)

Note3: If the same external input signal is set to use to "[Pr.80] External input signal selection" or "[Pr.95] External command signal selection" for the multiple axes in the QD77MS16, the error "Input signal logic selection" of those axes should be the same. Otherwise, "Input signal logic selection setting error" (error code: 938) will occur when the PLC READY signal [Y0] is turned ON, and the READY signal [X0] will not be turned ON.

[Pr.80] External input signal selection

Set whether to use "external input signal of QD77MS", "external input signal of servo amplifier", or "buffer memory of QD77MS" as an external input signal (upper/lower limit signal, proximity dog signal, or stop signal).

0: External input signal of QD77MS QD77MS2 QD77MS4
1: External input signal of servo amplifier *1
2: Buffer memory of QD77MS
3: External input signal 1 of QD77MS QD77MS16
4: External input signal 2 of QD77MS QD77MS16
5: External input signal 3 of QD77MS QD77MS16
6: External input signal 4 of QD77MS QD77MS16

*1: At MR-JE-B(F) use, refer to Appendix 6.5 "Connection with MR-JE-B(F)".

POINT

(1) When "2: Buffer memory of QD77MS" is set, operation is affected by the PLC scan time.
(2) When "3" to "6" is set in the QD77MS2/QD77MS4, the error "External signal selection error" (error code: 936) occurs at turning the PLC READY signal [Y0] ON, and the READY signal [X0] is not turned ON. Set "0" to use the external input signal of QD77MS2/QD77MS4.
(3) When "0" is set in the QD77MS16, the error "External signal selection error" (error code: 936) occurs at turning the PLC READY signal [Y0] ON, and the READY signal [X0] is not turned ON. Set "3" to "6" to use the external input signal of QD77MS16.

[Pr.24] Manual pulse generator/Incremental synchronous encoder input selection

Set the manual pulse generator/incremental synchronous encoder input pulse mode. (Only the value specified against the axis 1 is valid.)

0: A-phase/B-phase multiplied by 4
1: A-phase/B-phase multiplied by 2
2: A-phase/B-phase multiplied by 1
3: PLS/SIGN

Set the positive logic or negative logic in "[Pr.22] Input signal logic selection".

(1) A-phase/B-phase mode

- When the A-phase is 90° ahead of the B-phase, the motor will forward run.
- When the B-phase is 90° ahead of the A-phase, the motor will reverse run.

(a) A-phase/B-phase multiplied by 4

The positioning address increases or decreases at rising or falling edges of A-phase/B-phase.

[Pr.22] Input signal logic selection	
Positive logic	Negative logic
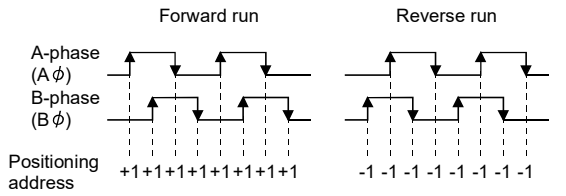	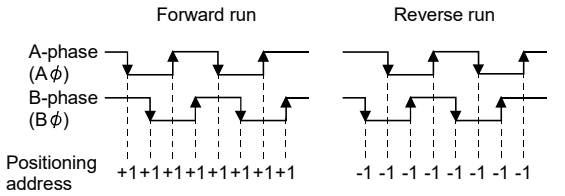

(b) A-phase/B-phase multiplied by 2

The positioning address increases or decreases at twice rising or twice falling edges of A-phase/B-phase.

[Pr.22] Input signal logic selection	
Positive logic	Negative logic
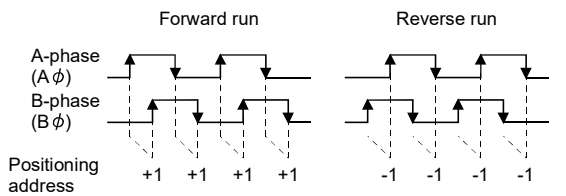	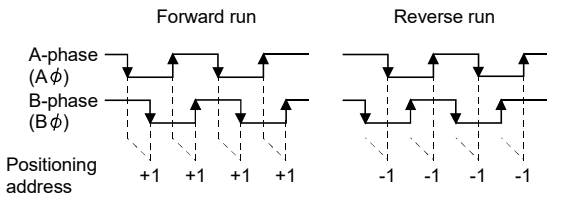

(c) A-phase/B-phase multiplied by 1

The positioning address increases or decreases at twice rising or twice falling edges of A-phase/B-phase.

[Pr.22] Input signal logic selection	
Positive logic	Negative logic
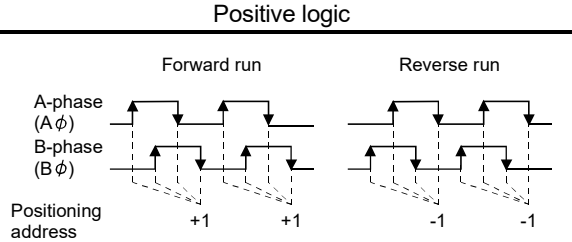	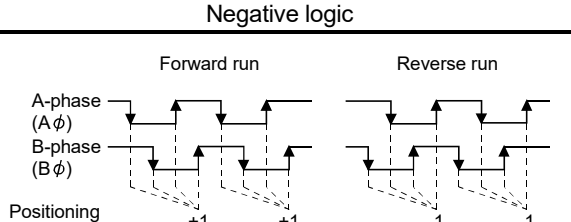

(2) PLS/SIGN

[Pr.22] Input signal logic selection	
Positive logic	Negative logic
Forward run and reverse run are controlled with the ON/OFF of the direction sign (SIGN). • The motor will forward run when the direction sign is HIGH. • The motor will reverse run when the direction sign is LOW.	Forward run and reverse run are controlled with the ON/OFF of the direction sign (SIGN). • The motor will forward run when the direction sign is LOW. • The motor will reverse run when the direction sign is HIGH.
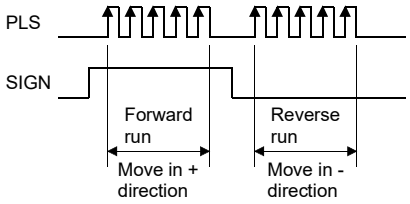	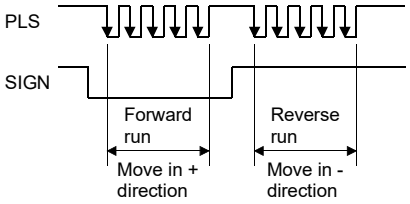

[Pr.81] Speed-position function selection

Select the mode of speed-position switching control.

0: INC mode

2: ABS mode

Note1: If the setting is other than 0 and 2, operation is performed in the INC mode with the setting regarded as 0.

[Pr.82] Forced stop valid/invalid selection

Set the forced stop valid/invalid. (Only the value specified against the axis 1 is valid.)

All axes of the servo amplifier are made to batch forced stop when the forced stop input signal is turned on after the forced stop valid/invalid selection is set to "0: Valid (External input signal)", or "2: Valid (Buffer memory)".

The error "Servo READY signal OFF during operation" (error code: 102) does not occur if the forced input signal is turned on during operation.

0: Valid (External input signal) ..... Forced stop (External input signal) is used.

1: Invalid ..... Forced stop is not used.

2: Valid (Buffer memory) ..... Forced stop (Buffer memory) is used.

Note1: If the setting is other than 0 to 2, the error "Forced stop valid/invalid setting error" (error code: 937) occurs.

Note2: The "[Md.50] Forced stop input" is stored "1" by setting "Forced stop valid/invalid selection" to invalid.

5.2.4 Detailed parameters 2

Item	Setting value, setting range		Default value	Buffer memory address	
	Value set with GX Works2	Value set with sequence program		QD77MS2 QD77MS4	QD77MS16
[Pr.25] Acceleration time 1	1 to 8388608 (ms)	1 to 8388608 (ms)	1000	36+150n 37+150n	
[Pr.26] Acceleration time 2				38+150n 39+150n	
[Pr.27] Acceleration time 3				40+150n 41+150n	
[Pr.28] Deceleration time 1				42+150n 43+150n	
[Pr.29] Deceleration time 2				44+150n 45+150n	
[Pr.30] Deceleration time 3				46+150n 47+150n	
[Pr.31] JOG speed limit value	The setting range differs depending on the "[Pr.1] Unit setting".		20000	48+150n 49+150n	
[Pr.32] JOG operation acceleration time selection	0: [Pr.9] Acceleration time 0	0	0	50+150n	
	1: [Pr.25] Acceleration time 1	1			
	2: [Pr.26] Acceleration time 2	2			
	3: [Pr.27] Acceleration time 3	3			
[Pr.33] JOG operation deceleration time selection	0: [Pr.10] Deceleration time 0	0	0	51+150n	
	1: [Pr.28] Deceleration time 1	1			
	2: [Pr.29] Deceleration time 2	2			
	3: [Pr.30] Deceleration time 3	3			
[Pr.34] Acceleration/deceleration process selection	0 : Trapezoid acceleration/ deceleration process	0	0	52+150n	
	1 : S-curve acceleration/ deceleration process	1			
[Pr.35] S-curve ratio	1 to 100 (%)	1 to 100 (%)	100	53+150n	
[Pr.36] Sudden stop deceleration time	1 to 8388608 (ms)	1 to 8388608 (ms)	1000	54+150n 55+150n	
[Pr.37] Stop group 1 rapid stop selection	0 : Normal deceleration stop	0	0	56+150n	
[Pr.38] Stop group 2 rapid stop selection	1 : Rapid stop	1		57+150n	
[Pr.39] Stop group 3 rapid stop selection				58+150n	
[Pr.40] Positioning complete signal output time	0 to 65535 (ms)	0 to 65535 (ms) 0 to 32767 : Set as a decimal 32768 to 65535 : Convert into hexadecimal and set	300	59+150n	

n: Axis No.-1

Item	Setting value, setting range		Default value	Buffer memory address	
	Value set with GX Works2	Value set with sequence program		QD77MS2 QD77MS4	QD77MS16
[Pr.41] Allowable circular interpolation error width	The setting value range differs depending on the "[Pr.1] Unit setting".		100	60+150n 61+150n	
[Pr.42] External command function selection	0: External positioning start	0	0	62+150n	
	1: External speed change request	1			
	2: Speed-position, position-speed switching request	2			
	3: Skip request	3			
	4: High speed input request	4			
[Pr.83] Speed control 10 x multiplier setting for degree axis	0: Invalid	0	0	63+150n	
	1: Valid	1			
[Pr.84] Restart allowable range when servo OFF to ON	0, 1 to 327680 [PLS] 0: restart not allowed		0	64+150n 65+150n	
[Pr.89] Manual pulse generator/ Incremental synchronous encoder input type selection	0: Differential output type	0	1	67	
	1: Voltage output/open collector type	1			
[Pr.90] Operation setting for speed-torque control mode	b0 to b3: Not used b4 to b7: Torque initial value selection 0: Command torque 1: Feedback torque b8 to b11: Speed initial value selection 0: Command speed 1: Feedback speed 2: Automatic selection b12 to b15: Condition selection at mode switching 0: Switching conditions valid (for switching control mode) 1: Zero speed ON condition invalid (for switching control mode)	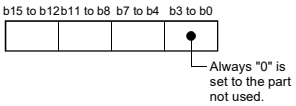	0000H	68+150n	
[Pr.95] External command signal selection QD77MS16	0: Not used	0	0		69+150n
	1: DI1	1			
	2: DI2	2			
	3: DI3	3			
	4: DI4	4			

n: Axis No.-1

[Pr.25] Acceleration time 1 to [Pr.27] Acceleration time 3

These parameters set the time for the speed to increase from zero to the "[Pr.8] Speed limit value" ("[Pr.31] JOG speed limit value" at JOG operation control) during a positioning operation.

[Pr.28] Deceleration time 1 to [Pr.30] Deceleration time 3

These parameters set the time for the speed to decrease from the "[Pr.8] Speed limit value" ("[Pr.31] JOG speed limit value" at JOG operation control) to zero during a positioning operation.

[Pr.31] JOG speed limit value

Set the maximum speed for JOG operation.

Note) Set the "JOG speed limit value" to a value less than "[Pr.8] Speed limit value".
If the "speed limit value" is exceeded, the error "JOG speed limit value error" (error code: 956) will occur.

[Pr.1] setting value	Value set with GX Works2 (unit)	Value set with sequence program (unit)
0 : mm	0.01 to 20000000.00 (mm/min)	1 to 2000000000 ($\times 10^{-2}$mm/min)
1 : inch	0.001 to 2000000.000 (inch/min)	1 to 2000000000 ($\times 10^{-3}$inch/min)
2 : degree	0.001 to 2000000.000 (degree/min) ∗1	1 to 2000000000 ($\times 10^{-3}$degree/min) ∗2
3 : PLS	1 to 1000000000 (PLS/s)	1 to 1000000000 (PLS/s)

∗1: The range of JOG speed limit value when "[Pr.83] Speed control 10 x multiplier setting for degree axis" is valid: 0.01 to 20000000.00 (degree/min)

∗2: The range of JOG speed limit value when "[Pr.83] Speed control 10 x multiplier setting for degree axis" is valid: 1 to 2000000000 ($\times 10^{-2}$degree/min)

[Pr.32] JOG operation acceleration time selection

Set which of "acceleration time 0 to 3" to use for the acceleration time during JOG operation.

0: Use value set in "[Pr.9] Acceleration time 0".
1: Use value set in "[Pr.25] Acceleration time 1".
2: Use value set in "[Pr.26] Acceleration time 2".
3: Use value set in "[Pr.27] Acceleration time 3".

[Pr.33] JOG operation deceleration time selection

Set which of "deceleration time 0 to 3" to use for the deceleration time during JOG operation.

0: Use value set in "[Pr.10] Deceleration time 0".
1: Use value set in "[Pr.28] Deceleration time 1".
2: Use value set in "[Pr.29] Deceleration time 2".
3: Use value set in "[Pr.30] Deceleration time 3".

[Pr.34] Acceleration/deceleration process selection

Set whether to use trapezoid acceleration/deceleration or S-curve acceleration/ deceleration for the acceleration/deceleration process.

Note) Refer to Section 13.7.6 "Acceleration/deceleration processing function" for details.

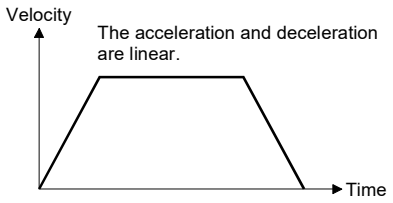

<Trapezoid acceleration/deceleration>

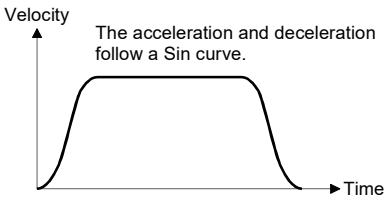

<S-curve acceleration/deceleration>

[Pr.35] S-curve ratio

Set the S-curve ratio (1 to 100%) for carrying out the S-curve acceleration/ deceleration process.
The S-curve ratio indicates where to draw the acceleration/deceleration curve using the Sin curve as shown below.

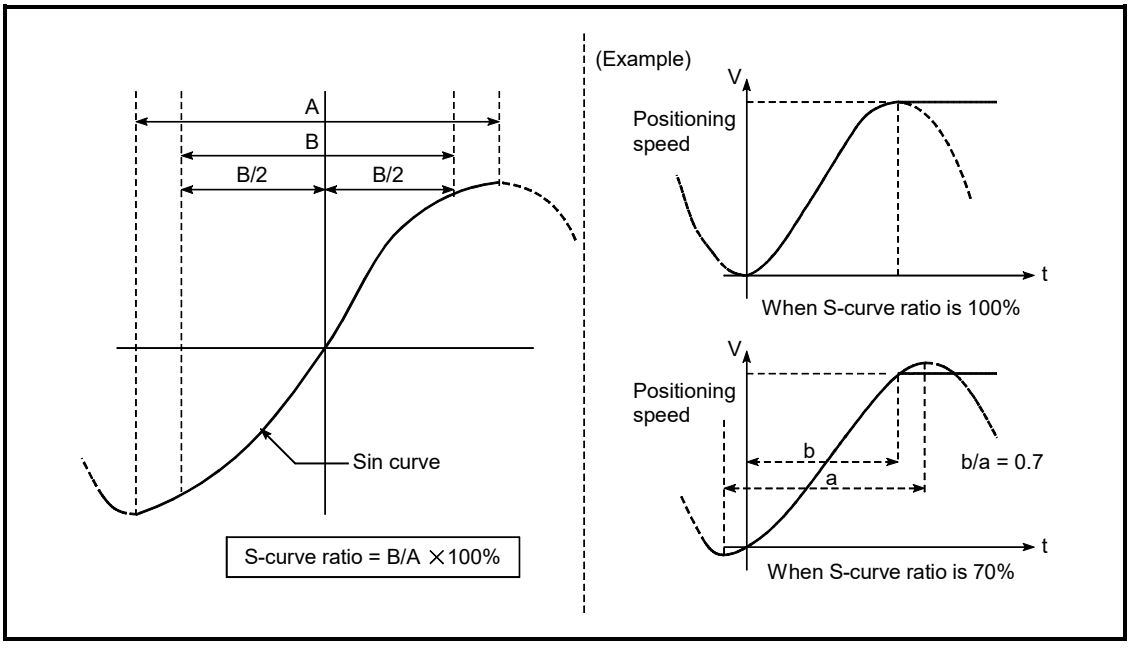

[Pr.36] Rapid stop deceleration time

Set the time to reach speed 0 from "[Pr.8] Speed limit value" ("[Pr.31] JOG speed limit value" at JOG operation control) during the rapid stop. The illustration below shows the relationships with other parameters.

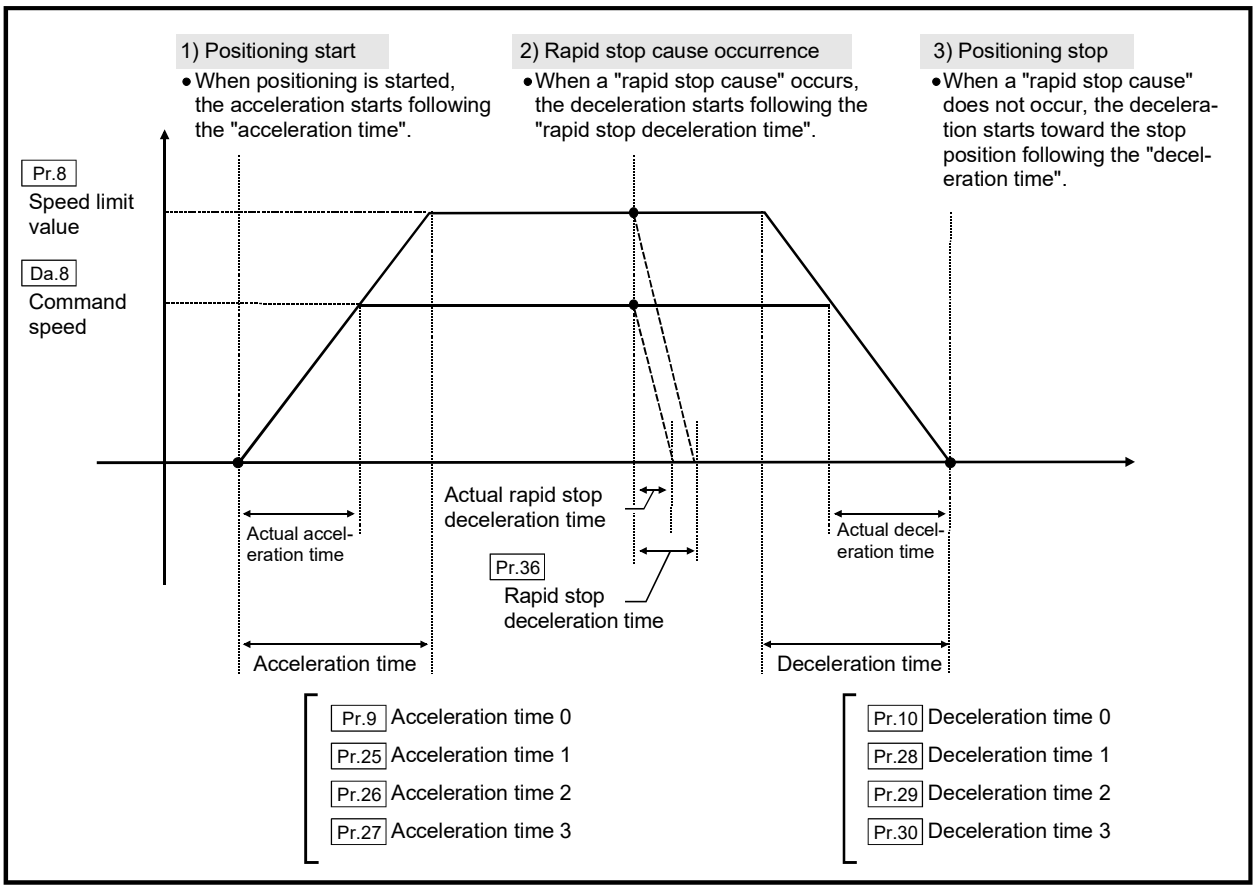

[Pr.37] Stop group 1 rapid stop selection

to

[Pr.39] Stop group 3 rapid stop selection

Set the method to stop when the stop causes in the following stop groups occur.

- Stop group 1 ..... Stop with hardware stroke limit
- Stop group 2 ..... Error occurrence of the PLC CPU, PLC READY signal [Y0] OFF, Fault in test mode
- Stop group 3 ..... Axis stop signal from PLC CPU
  Stop signal from test function of GX Works2
  Error occurrence (excludes errors in stop groups 1 and 2: includes only the software stroke limit errors during JOG operation, speed control, speed-position switching control, and position-speed switching control)

The methods of stopping include "0: Normal deceleration stop" and "1: Rapid stop". If "1: Rapid stop" is selected, the axis will rapidly decelerate to a stop when the stop cause occurs.

[Pr.40] Positioning complete signal output time

Set the output time of the positioning complete signal output from the Simple Motion module.
A positioning completes when the specified dwell time has passed after the Simple Motion module had terminated the command output.
For the interpolation control, the positioning completed signal of interpolation axis is output only during the time set to the reference axis.

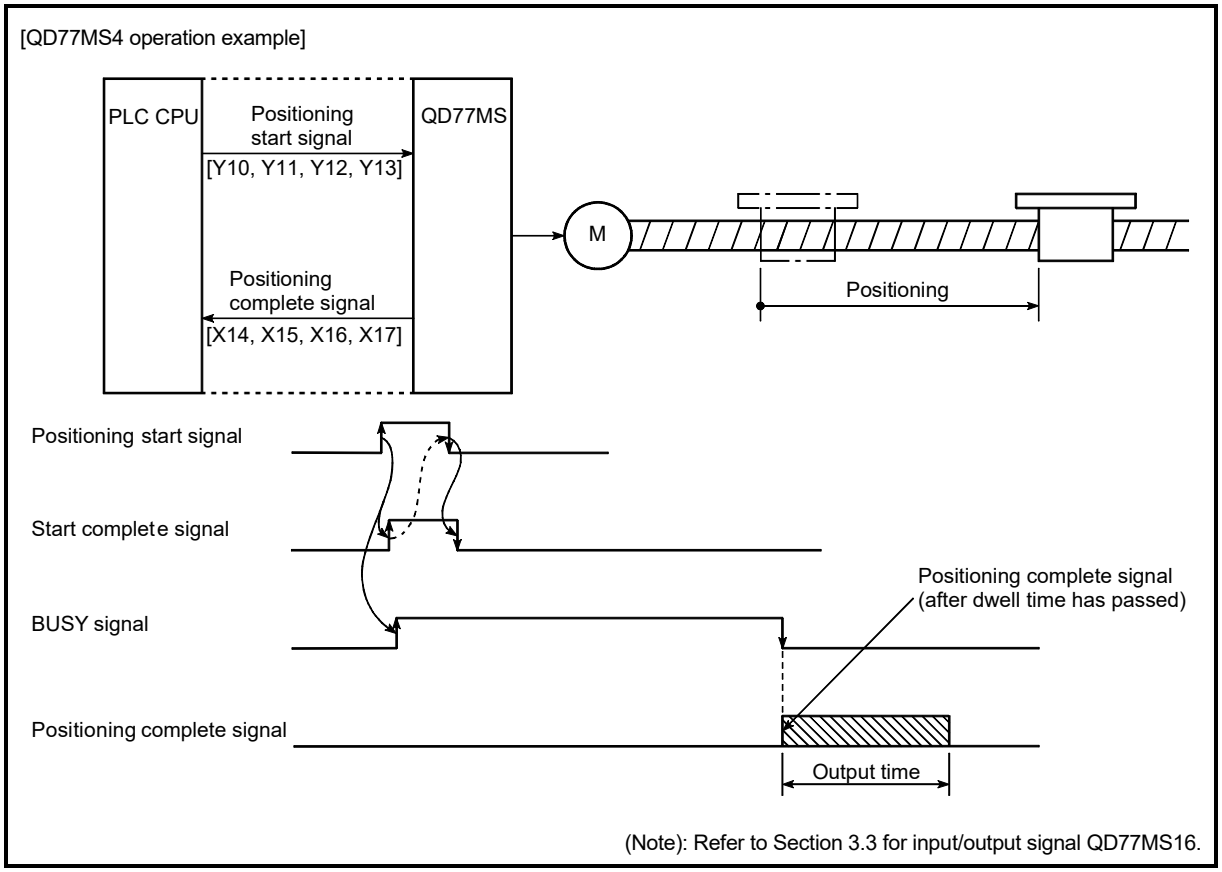

Positioning complete signal output time

[Pr.41] Allowable circular interpolation error width

The allowable error range of the calculated arc path and end point address is set.
*1 If the error of the calculated arc path and end point address is within the set range, circular interpolation will be carried out to the set end point address while compensating the error with spiral interpolation.
The allowable circular interpolation error width is set in the following axis buffer memory addresses.

(Example)
- If axis 1 is the reference axis, set in the axis 1 buffer memory addresses [60, 61].
- If axis 4 is the reference axis, set in the axis 4 buffer memory addresses [510, 511].

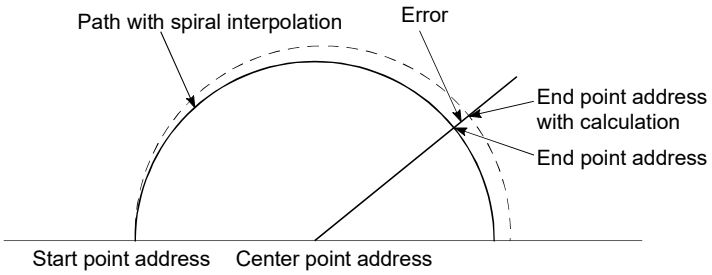

*1: With circular interpolation control using the center point designation, the arc path calculated with the start point address and center point address and the end point address may deviate.

[Pr.1] setting value	Value set with GX Works2 (unit)	Value set with sequence program (unit)
0 : mm	0 to 10000.0 (μm)	0 to 100000 ($\times 10^{-1}$μm)
1 : inch	0 to 1.00000 (inch)	0 to 100000 ($\times 10^{-5}$inch)
2 : degree	0 to 1.00000 (degree)	0 to 100000 ($\times 10^{-5}$degree)
3 : PLS	0 to 100000 (PLS)	0 to 100000 (PLS)

[Pr.42] External command function selection

Select a command with which the external command signal should be associated.

0: External positioning start
The external command signal input is used to start a positioning operation.

1: External speed change request
The external command signal input is used to change the speed in the current positioning operation. The new speed should be set in the "[Cd.14] New speed value"

2: Speed-position, position-speed switching request
The external command signal input is used to switch from the speed control to the position control while in the speed-position switching control mode, or from the position control to the speed control while in the position-speed switching control mode.
To enable the speed-position switching control, set the "[Cd.24] Speed-position switching enable flag" to "1".
To enable the position-speed switching control, set the "[Cd.26] Position-speed switching enable flag" to "1".

3: Skip request
The external command signal input is used skip the current positioning operation.

4: High speed input request
The external command signal input is used to execute the mark detection. And, also set to use the external command signal in the synchronous control.

POINT
To enable the external command signal, set the "[Cd.8] External command valid" to "1".

[Pr.83] Speed control 10 x multiplier setting for degree axis

Set the speed control 10 x multiplier setting for degree axis when you use command speed and speed limit value set by the positioning data and the parameter at "[Pr.1] Unit setting" setup degree by ten times at the speed.

0: Invalid
1: Valid

Normally, the speed specification range is 0.001 to 2000000.000[degree/min], but it will be decupled and become 0.01 to 20000000.00[degree/min] by setting "[Pr.83] Speed control 10 x multiplier setting for degree axis" to valid.

Note) The speed control 10 x multiplier setting for degree axis is included in detailed parameters 2, but it will be valid at the rising edge (OFF to ON) of the PLC READY signal [Y0].

∗1: Refer to Section 13.7.10 "Speed control 10 x multiplier setting for degree axis function" about speed control 10 x multiplier setting for degree axis.

[Pr.83] setting value	Value set with GX Works2 (unit)	Value set with sequence program (unit)
0 : Invalid	0.001 to 2000000.000 (degree/min)	1 to 2000000000 ($\times 10^{-3}$degree/min)
1 : Valid	0.01 to 20000000.00 (degree/min)	1 to 2000000000 ($\times 10^{-2}$degree/min)

[Pr.84] Restart allowable range when servo OFF to ON

(1) Restart function at switching servo OFF to ON

The restart function at switching servo OFF to ON performs continuous positioning operation (positioning start, restart) when switching servo OFF to ON while the Simple Motion module is stopped (including forced stop, servo forced stop).

Restart at switching servo OFF to ON can be performed when the difference between the last command position of Simple Motion module at stop and the present value at switching servo OFF to ON is equal to or less than the value set in the buffer memory for the restart allowable range setting.

(a) Servo emergency stop processing

1) When the difference between the last command position of Simple Motion module at the forced stop input or the servo forced stop input and the present value at the forced stop release or the servo forced stop release is equal to or less than the value set in the buffer memory for the restart allowable range setting, the positioning operation is judged as stopped and can be restarted.

2) When the difference between the last command position of Simple Motion module at the forced stop input or the servo forced stop input and the present value at the forced stop release or the servo forced stop release is greater than the value set in the buffer memory for the restart allowable range setting, the positioning operation is judged as on-standby and cannot be restarted.

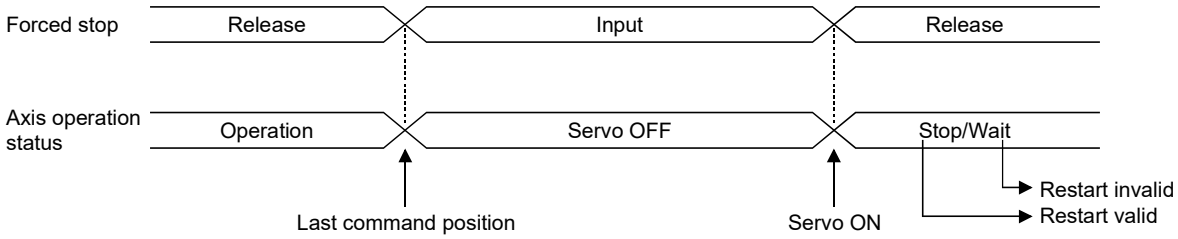

(b) Processing at switching the servo ON signal from OFF to ON

1) When the difference between the last command position of Simple Motion module at switching the servo ON signal from ON to OFF and the present value at switching the servo ON signal from OFF to ON is equal to or less than the value set in the buffer memory for the restart allowable range setting, the positioning operation is judged as stopped and can be restarted.

2) When the difference between the last command position of Simple Motion module at switching the servo ON signal from ON to OFF and the present value at switching the servo ON signal from OFF to ON is greater than the value set in the buffer memory for the restart allowable range setting, the positioning operation is judged as on-standby and cannot be restarted.

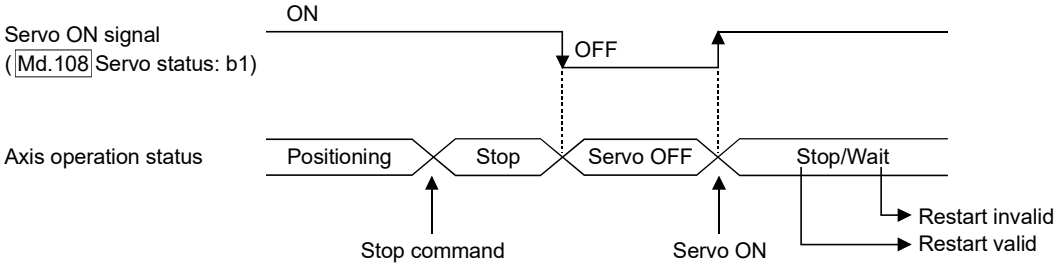

(2) Setting method

For performing restart at switching servo OFF to ON, set the restart allowable range in the following buffer memory.

Buffer memory address		Item	Setting range	Default value
QD77MS2 QD77MS4	QD77MS16			
64+150n 65+150n		[Pr.84] Restart allowable range when servo OFF to ON	0, 1 to 327680 (PLS) 0: restart not allowed	0

[Setting example]

A program to set the restart allowable range for axis 1 to 10000 PLS is shown below.

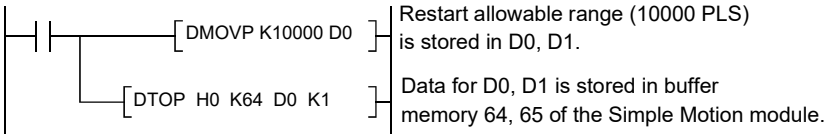

(3) Precautionary notes

(a) The difference between the last command position at servo OFF and the present value at servo ON is output at once at the first restart. If the restart allowable range is large at this time, an overload may occur on the servo side.
Set a value which does not affect the mechanical system by output once to the restart allowable range when switching servo OFF to ON.

(b) The restart at switching servo OFF to ON is valid only at switching servo OFF to ON at the first time. At the second time or later, the setting for restart allowable range when switching servo OFF to ON is disregarded.

(c) Execute servo OFF when the mechanical system is in complete stop state. The restart at switching servo OFF to ON cannot be applied to a system in which the mechanical system is operated by external pressure or other force during servo OFF.

(d) Restart can be executed only while the axis operation status is "stop". Restart cannot be executed when the axis operation status is other than "stop".

(e) When the PLC READY signal is switched from OFF to ON during servo OFF, restart cannot be executed.
If restart is requested, the warning "Restart not possible" (warning code: 104) occurs.

(f) Do not restart while a stop command is ON.
When restart is executed during a stop, the error "Stop signal ON at start" (error code: 106) occurs and the axis operation status becomes "ERR". Therefore, restart cannot be performed even if the error is reset.

(g) Restart can also be executed while the positioning start signal is ON. However, do not set the positioning start signal from OFF to ON during a stop.
If the positioning start signal is switched from OFF to ON, positioning is performed from the positioning data number set in "[Cd.3] Positioning start No." or from the positioning data number of the specified point.

(h) When positioning is terminated by a continuous-operation interrupt request, restart cannot be performed.
If a restart request is executed, the warning "Restart not possible" (warning code: 104) occurs.

[Operation at emergency stop input]

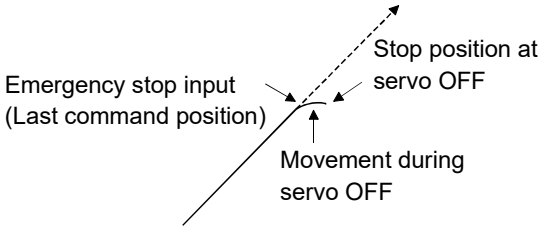

[Operation at restart]

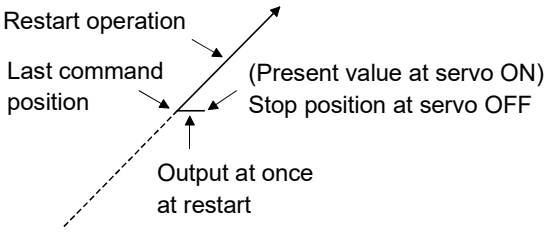

[Pr.89] Manual pulse generator/Incremental synchronous encoder input type selection

Set the input type from the manual pulse generator/incremental synchronous encoder. (Only the value specified against the axis 1 is valid.)
0: Differential output type
1: Voltage output/open collector type

Note) The "Manual pulse generator/Incremental synchronous encoder input type selection" is included in detailed parameters 2, but it will be valid at the rising edge (OFF to ON) of the PLC READY signal [Y0].

Refer to Section 3.4 "Specifications of interfaces with external devices" for details.

[Pr.90] Operation setting for speed-torque control mode

Operation setting of the speed control mode, torque control mode or continuous operation to torque control mode at the speed-torque control is executed.

(1) Torque initial value selection

Set the torque initial value at switching to torque control mode or to continuous operation to torque control mode.

0: Command torque .....Command torque value at switching. (following axis control data)
Switching to torque control mode:
"[Cd.143] Command torque at torque control mode"
Switching to continuous operation to torque control mode:
"[Cd.150] Target torque at continuous operation to torque control mode"

1: Feedback torque.....Motor torque value at switching.

(2) Speed initial value selection

Set the initial speed at switching from position control mode to speed control mode or the initial speed at switching from position control mode or from speed control mode to continuous operation to torque control mode.

0: Command speed .....Speed that position command at switching is converted into the motor rotation speed.

1: Feedback speed .....Motor rotation speed received from servo amplifier at switching

2: Automatic selection.....The lower speed between speed that position command at switching is converted into the motor rotation speed and motor rotation speed received from servo amplifier at switching. (This setting is valid only when continuous operation to torque control mode is used. At switching from position control mode to speed control mode, operation is the same as "0: Command speed".)

(3) Condition selection at mode switching

Set the valid/invalid of switching conditions for switching control mode.

0: Switching conditions valid (for switching control mode)

1: Zero speed ON condition invalid (for switching control mode)

Note) The "Operation setting for speed-torque control mode" is included in detailed parameters 2, but it will be valid at the rising edge (OFF to ON) of the PLC READY signal [Y0].

POINT
Set "1: Zero speed ON condition invalid (for switching control mode)" to switch the control mode without waiting for the servo motor to stop. Note that it may cause vibration or impact at control switching.

[Pr.95] External command signal selection QD77MS16

Set the external command signal.

0: Not used ..... External command signal is not used.
1: DI1 ..... DI1 is used as external command signal.
2: DI2 ..... DI2 is used as external command signal.
3: DI3 ..... DI3 is used as external command signal.
4: DI4 ..... DI4 is used as external command signal.

Note) The "External command signal selection" is included in detailed parameters 2, but it will be valid at the rising edge (OFF to ON) of the PLC READY signal [Y0].

POINT
Same external command signal can be used in the multiple axes.

5.2.5 HPR basic parameters

Item	Setting value, setting range		Default value	Buffer memory address	
	Value set with GX Works2	Value set with sequence program		QD77MS2 QD77MS4	QD77MS16
[Pr.43] HPR method	0 : Proximity dog method	0	0	70+150n	
	4 : Count method 1)	4			
	5 : Count method 2)	5			
	6 : Data set method	6			
	7 : Scale origin signal detection method	7			
	8 : Driver HPR method	8			
[Pr.44] HPR direction	0 : Positive direction (address increment direction)	0	0	71+150n	
	1 : Negative direction (address decrement direction)	1			
[Pr.45] HP address	The setting value range differs depending on the "[Pr.1] Unit setting".		0	72+150n 73+150n	
[Pr.46] HPR speed			1	74+150n 75+150n	
[Pr.47] Creep speed			1	76+150n 77+150n	
[Pr.48] HPR retry	0 : Do not retry HPR with limit switch	0	0	78+150n	
	1 : Retry HPR with limit switch	1			

n: Axis No.-1

[Pr.43] HPR method

Set the "HPR method" for carrying out machine HPR.

0: Proximity dog method ..... After decelerating at the proximity dog ON, stop at the zero signal and complete the machine HPR.

4: Count method 1) ..... After decelerating at the proximity dog ON, move the designated distance, and complete the machine HPR with the zero signal.

5: Count method 2) ..... After decelerating at the proximity dog ON, move the designated distance, and complete the machine HPR.

6: Data set method..... The position where the machine HPR has been made will be the HP.

7: Scale origin signal detection method..... After deceleration stop at the proximity dog ON, move to the opposite direction against the HPR direction, and move to the HPR direction after deceleration stop once at the detection of the first zero signal. Then, it stops at the detected nearest zero signal, and completes the machine HPR.

8: Driver HPR method..... Carry out the HPR operation on the driver side. The HPR operation and parameters depend on the specifications of the driver. Refer to Appendix 6.3 "AlphaStep/5-phase stepping motor driver manufactured by ORIENTAL MOTOR Co., Ltd." or Appendix 6.4 "IAI electric actuator controller manufactured by IAI Corporation" for details on the driver HPR method.

When HPR method that cannot be executed is set, the error "HPR method invalid" (error code: 232) occurs and the HPR is not executed.

Note) Refer to Section 8.2 "Machine HPR" for details on the HPR methods.

0 : Proximity dog method

(1) Start machine HPR.
(Start movement at the "[Pr.46] HPR speed" in the "[Pr.44] HPR direction".)
(2) Detect the proximity dog ON, and start deceleration.
(3) Decelerate to "[Pr.47] Creep speed", and move with the creep speed.
(At this time, the proximity dog must be ON. If the proximity dog is OFF, the axis will decelerate to a stop.)
(4) At the first zero signal after the proximity dog turned OFF, machine HPR is completed.

Note) After the home position return (HPR) has been started, the zero point of the encoder must be passed at least once before point A is reached.
However, if selecting "1: Not need to pass servo motor Z-phase after power on" with "Function selection C-4 (PC17)", it is possible to carry out the home position return (HPR) without passing the zero point.

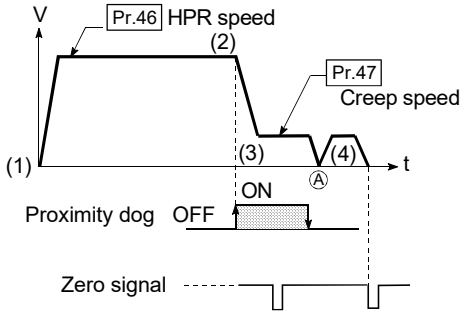

4 : Count method 1)

(1) Start machine HPR.
(Start movement at the "[Pr.46] HPR speed" in the "[Pr.44] HPR direction".)
(2) Detect the proximity dog ON, and start deceleration.
(3) Decelerate to "[Pr.47] Creep speed", and move with the creep speed.
(4) After the proximity dog turns ON and the movement amount set in "[Pr.50] Setting for the movement amount after proximity dog ON" has passed, the Simple Motion module stops with the first zero signal, and the machine HPR is completed.

Note) After the home position return (HPR) has been started, the zero point of the encoder must be passed at least once before point A is reached.
However, if selecting "1: Not need to pass servo motor Z-phase after power on" with "Function selection C-4 (PC17)", it is possible to carry out the home position return (HPR) without passing the zero point.

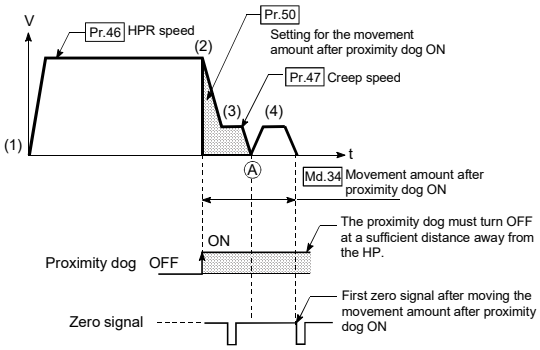

5 : Count method 2)

(1) Start machine HPR.
(Start movement at the "[Pr.46] HPR speed" in the "[Pr.44] HPR direction".)
(2) Detect the proximity dog ON, and start deceleration.
(3) Decelerate to "[Pr.47] Creep speed", and move with the creep speed.
(4) After the proximity dog turns ON and the movement amount set in "[Pr.50] Setting for the movement amount after proximity dog ON" has passed, machine HPR is completed.

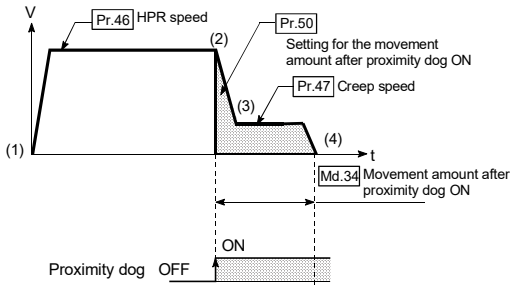

6 : Data set method

The position where the machine HPR has been made will be the HP.
(Perform after the servo amplifier has been turned ON and the servomotor has been rotated at least once using the JOG or similar operation. However, if selecting "1: Not need to pass servo motor Z-phase after power on" with "Function selection C-4 (PC17)", it is possible to carry out the home position return (HPR) without passing the zero point.)

7 : Scale origin signal detection method

(1) Start machine HPR.
(Start movement at the "[Pr.46] HPR speed" in the "[Pr.44] HPR direction".)
(2) Detect the proximity dog ON, and start deceleration.
(3) After deceleration stop, it moves in the opposite direction against of HPR at the "[Pr.46] HPR speed".
(4) During movement, the machine begins decelerating when the first zero signal is detected.
(5) After deceleration stop, it moves in direction of HPR at the speed set in "[Pr.47] Creep speed", and stops at the detected nearest zero signal to complete the machine HPR.

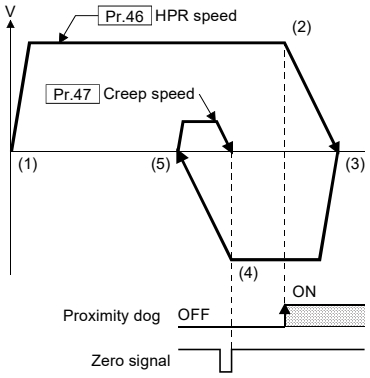

[Pr.44] HPR direction

Set the direction to start movement when starting machine HPR.

0: Positive direction (address increment direction)
Moves in the direction that the address increments. (Arrow 2))

1: Negative direction (address decrement direction)
Moves in the direction that the address decrements. (Arrow 1))

Normally, the HP is set near the lower limit or the upper limit, so "[Pr.44] HPR direction" is set as shown below.

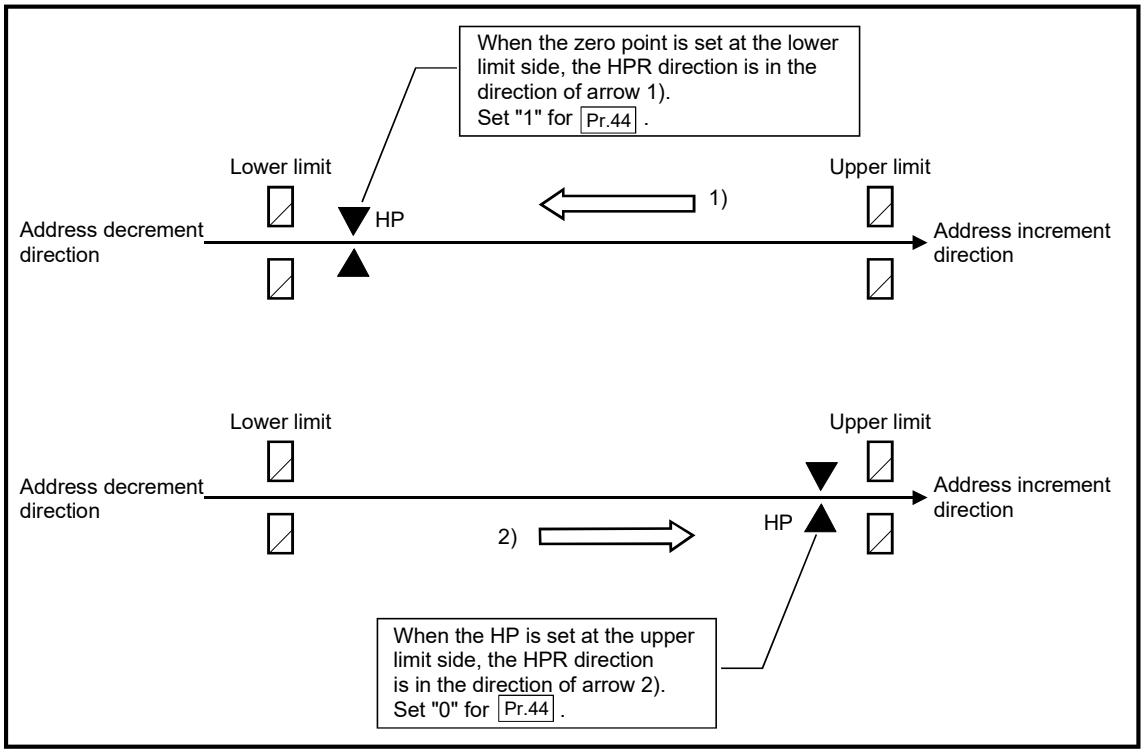

[Pr.45] HP address

Set the address used as the reference point for positioning control (ABS system). (When the machine HPR is completed, the stop position address is changed to the address set in "[Pr.45] HP address". At the same time, the "[Pr.45] HP address" is stored in "[Md.20] Command position value" and "[Md.21] Feed machine value".)

[Pr.1] setting value	Value set with GX Works2 (unit)	Value set with sequence program (unit)
0 : mm	-214748364.8 to 214748364.7 (μm)	-2147483648 to 2147483647 ($\times 10^{-1}$μm)
1 : inch	-21474.83648 to 21474.83647 (inch)	-2147483648 to 2147483647 ($\times 10^{-5}$inch)
2 : degree	0 to 359.99999 (degree)	0 to 35999999 ($\times 10^{-5}$degree)
3 : PLS	-2147483648 to 2147483647 (PLS)	-2147483648 to 2147483647 (PLS)

[Pr.46] HPR speed

Set the speed for HPR.

Note) Set the "HPR speed" to less than "[Pr.8] Speed limit value". If the "speed limit value" is exceeded, the error "Outside speed limit value range" (error code: 910) will occur, and HPR will not be executed.
The "HPR speed" should be equal to or faster than the "[Pr.7] Bias speed at start" and "[Pr.47] Creep speed".

[Pr.1] setting value	Value set with GX Works2 (unit)	Value set with sequence program (unit)
0 : mm	0.01 to 20000000.00 (mm/min)	1 to 2000000000 ($\times 10^{-2}$mm/min)
1 : inch	0.001 to 2000000.000 (inch/min)	1 to 2000000000 ($\times 10^{-3}$inch/min)
2 : degree	0.001 to 2000000.000 (degree/min)`∗1	1 to 2000000000 ($\times 10^{-3}$degree/min)∗2
3 : PLS	1 to 1000000000 (PLS/s)	1 to 1000000000 (PLS/s)

∗1: The range of home position return speed when "[Pr.83] Speed control 10 x multiplier setting for degree axis" is valid: 0.01 to 20000000.00 (degree/min)

∗2: The range of home position return speed when "[Pr.83] Speed control 10 x multiplier setting for degree axis" is valid: 1 to 2000000000 ($\times 10^{-2}$degree/min)

[Pr.47] Creep speed

Set the creep speed after proximity dog ON (the low speed just before stopping after decelerating from the HPR speed).
The creep speed is set within the following range.

([Pr.46] HPR speed) ≥ ([Pr.47] Creep speed) ≥ ([Pr.7] Bias speed at start)

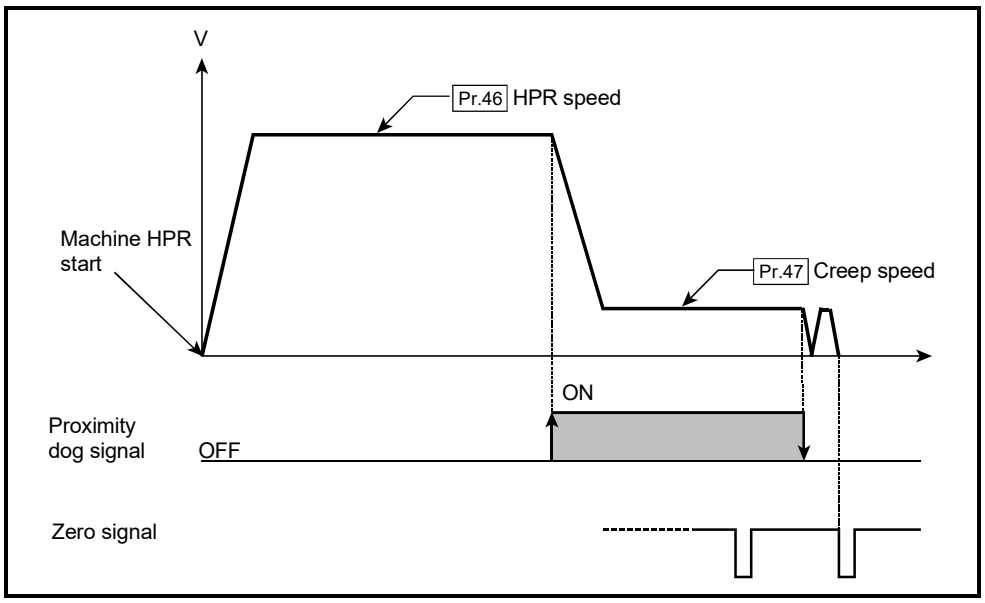

[Pr.1] setting value	Value set with GX Works2 (unit)	Value set with sequence program (unit)
0 : mm	0.01 to 20000000.00 (mm/min)	1 to 2000000000 ($\times 10^{-2}$mm/min)
1 : inch	0.001 to 2000000.000 (inch/min)	1 to 2000000000 ($\times 10^{-3}$inch/min)
2 : degree	0.001 to 2000000.000 (degree/min) ∗1	1 to 2000000000 ($\times 10^{-3}$degree/min) ∗2
3 : PLS	1 to 1000000000 (PLS/s)	1 to 1000000000 (PLS/s)

∗1: The range of home position return speed when "[Pr.83] Speed control 10 x multiplier setting for degree axis" is valid: 0.01 to 20000000.00 (degree/min)
∗2: The range of home position return speed when "[Pr.83] Speed control 10 x multiplier setting for degree axis" is valid: 1 to 2000000000 ($\times 10^{-2}$degree/min)

[Pr.48] HPR retry

Set whether to carry out HPR retry.
When the HPR retry function is validated and the machine HPR is started, first the axis will move in the HPR direction (1)). If the upper/lower limit signal turns OFF before the proximity dog signal ON is detected (2)), the axis will decelerate to a stop, and then will move in the direction opposite the HPR direction (3)). If the following edge of the proximity dog signal is detected during movement in the opposite direction, the axis will decelerate to a stop (4)), and then will carry out machine HPR again (5), 6)).

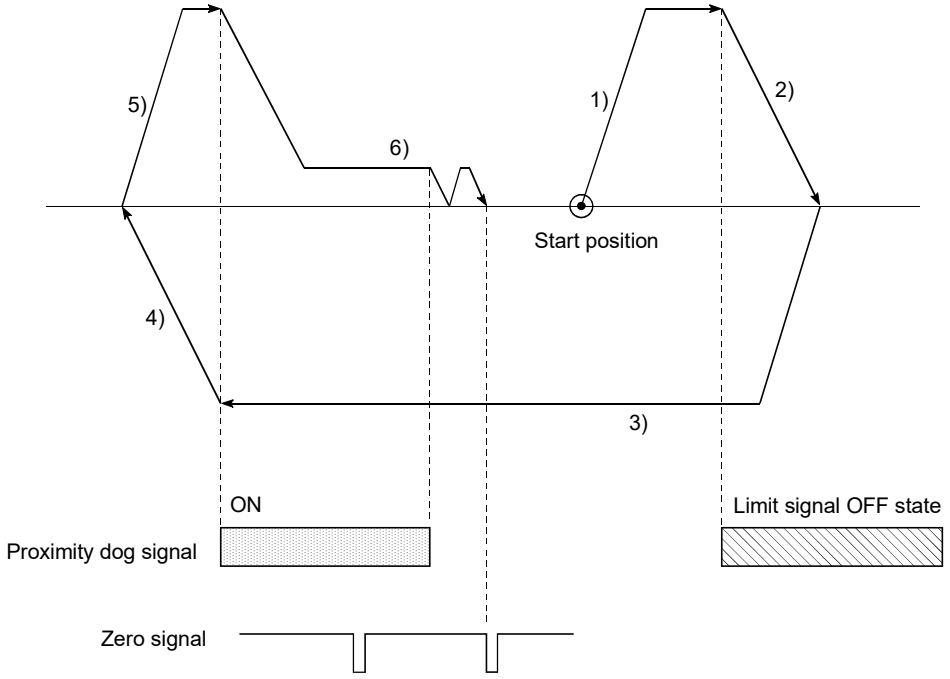

[Operation for HPR retry function]

1) Movement in the HPR direction starts with the machine HPR start.
2) The axis decelerates when the limit signal OFF is detected.
3) After stopping at detection the limit signal OFF, the axis moves at the HPR speed in the direction opposite to the specified HPR direction.
4) The axis decelerates when the proximity dog signal turns OFF.
5) After stopping with the proximity dog signal OFF, start machine HPR in the HPR direction.
6) The machine begins decelerating when the proximity dog ON is detected and completes machine HPR.

5.2.6 HPR detailed parameters

Item	Setting value, setting range		Default value	Buffer memory address	
	Value set with GX Works2	Value set with sequence program		QD77MS2 QD77MS4	QD77MS16
[Pr.50] Setting for the movement amount after proximity dog ON	The setting value range differs depending on the "[Pr.1] Unit setting".		0	80+150n 81+150n	
[Pr.51] HPR acceleration time selection	0 : [Pr.9] Acceleration time 0	0	0	82+150n	
	1 : [Pr.25] Acceleration time 1	1			
	2 : [Pr.26] Acceleration time 2	2			
	3 : [Pr.27] Acceleration time 3	3			
[Pr.52] HPR deceleration time selection	0 : [Pr.10] Deceleration time 0	0	0	83+150n	
	1 : [Pr.28] Deceleration time 1	1			
	2 : [Pr.29] Deceleration time 2	2			
	3 : [Pr.30] Deceleration time 3	3			
[Pr.53] HP shift amount	The setting value range differs depending on the "[Pr.1] Unit setting".		0	84+150n 85+150n	
[Pr.54] HPR torque limit value	1 to 1000 (%)	1 to 1000 (%)	300	86+150n	
[Pr.55] Operation setting for incompletion of HPR	0 : Positioning control is not executed.	0	0	87+150n	
	1 : Positioning control is executed.	1			
[Pr.56] Speed designation during HP shift	0 : HPR speed	0	0	88+150n	
	1 : Creep speed	1			
[Pr.57] Dwell time during HPR retry	0 to 65535 (ms)	0 to 65535 (ms) 0 to 32767 : Set as a decimal 32768 to 65535 : Convert into hexadecimal and set	0	89+150n	

n: Axis No.-1

[Pr.50] Setting for the movement amount after proximity dog ON

When using the count method 1) or 2), set the movement amount to the HP after the proximity dog signal turns ON.

(The movement amount after proximity dog ON should be equal to or greater than the sum of the "distance covered by the deceleration from the HPR speed to the creep speed" and "distance of movement in 10 ms at the HPR speed".)

Example of setting for "Pr. 50 Setting for the movement amount after proximity dog ON"

Assuming that the "Pr. 8 Speed limit value" is set to 200 kPLS/s, "Pr. 46 HPR speed" to 10 kPLS/s, "Pr. 47 Creep speed" to 1 kPLS/s, and deceleration time to 300 ms, the minimum value of "Pr. 50 Setting for the movement amount after proximity dog ON" is calculated as follows:

[HPR operation]

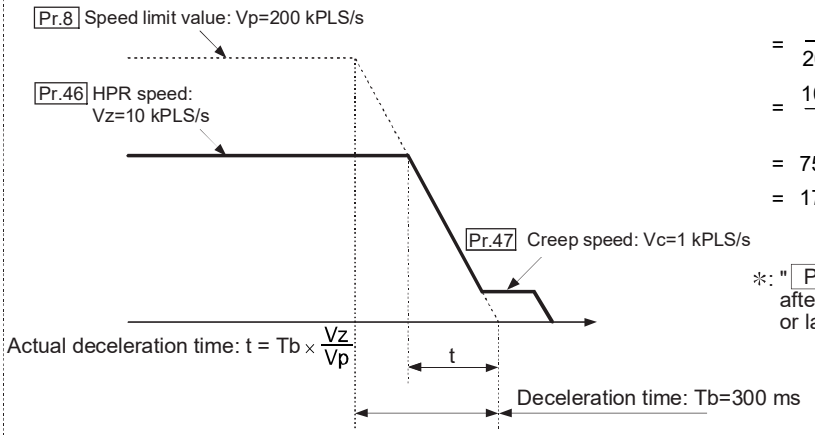

$$[\text{Deceleration distance}] = \frac{1}{2} \times \frac{Vz}{1000} \times t + \underbrace{0.01 \times Vz}_{\text{Movement amount for 10ms at HPR speed.}}$$

$$= \frac{Vz}{2000} \times \frac{Tb \times Vz}{Vp} + 0.01 \times Vz$$

$$= \frac{10 \times 10^3}{2000} \times \frac{300 \times 10 \times 10^3}{200 \times 10^3} + 0.01 \times 10 \times 10^3$$

$$= 75 + 100$$

$$= 175$$

∗: "Pr.50 Setting for the movement amount after proximity dog ON" should be equal to or larger than 175.

[Pr.1] setting value	Value set with GX Works2 (unit)	Value set with sequence program (unit)
0 : mm	0 to 214748364.7 (μm)	0 to 2147483647 ($\times 10^{-1}$μm)
1 : inch	0 to 21474.83647 (inch)	0 to 2147483647 ($\times 10^{-5}$inch)
2 : degree	0 to 21474.83647 (degree)	0 to 2147483647 ($\times 10^{-5}$degree)
3 : PLS	0 to 2147483647 (PLS)	0 to 2147483647 (PLS)

[Pr.51] HPR acceleration time selection

Set which of "acceleration time 0 to 3" to use for the acceleration time during HPR.

0 : Use the value set in "[Pr.9] Acceleration time 0".

1 : Use the value set in "[Pr.25] Acceleration time 1".

2 : Use the value set in "[Pr.26] Acceleration time 2".

3 : Use the value set in "[Pr.27] Acceleration time 3".

[Pr.52] HPR deceleration time selection

Set which of "deceleration time 0 to 3" to use for the deceleration time during HPR.

0 : Use the value set in "[Pr.10] Deceleration time 0".
1 : Use the value set in "[Pr.28] Deceleration time 1".
2 : Use the value set in "[Pr.29] Deceleration time 2".
3 : Use the value set in "[Pr.30] Deceleration time 3".

[Pr.53] HP shift amount

Set the amount to shift (move) from the position stopped at with machine HPR.

* The HP shift function is used to compensate the HP stopped at with machine HPR.
  If there is a physical limit to the HP, due to the relation of the proximity dog installation position, use this function to compensate the HP to an optimum position.

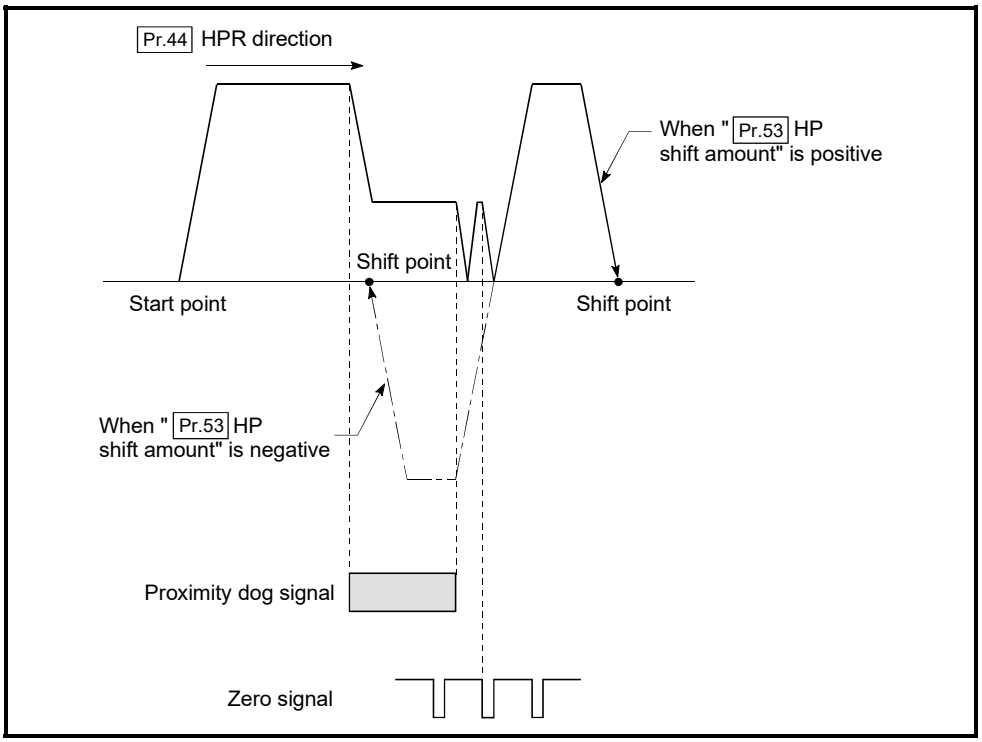

[Pr.1] setting value	Value set with GX Works2 (unit)	Value set with sequence program (unit)
0 : mm	-214748364.8 to 214748364.7 (μm)	-2147483648 to 2147483647 ($\times 10^{-1}$μm)
1 : inch	-21474.83648 to 21474.83647 (inch)	-2147483648 to 2147483647 ($\times 10^{-5}$inch)
2 : degree	-21474.83648 to 21474.83647 (degree)	-2147483648 to 2147483647 ($\times 10^{-5}$degree)
3 : PLS	-2147483648 to 2147483647 (PLS)	-2147483648 to 2147483647 (PLS)

[Pr.54] HPR torque limit value

Set the value to limit the servomotor torque after reaching the creep speed during machine HPR.
Refer to Section 13.4.2 "Torque limit function" for details on the torque limits.

[Pr.55] Operation setting for incompletion of HPR

Set whether the positioning control is executed or not (When the HPR request flag is ON.).
0: Positioning control is not executed.
1: Positioning control is executed.

(1) When HPR request flag is ON, selecting "0: Positioning control is not executed" will result in the error "Start at HPR incomplete" (error code: 547), and positioning control will not be performed. At this time, operation with the manual control (JOG operation, inching operation, manual pulse generator operation) is available.
The positioning control can be executed even if the HPR request flag is ON when selecting "1: Positioning control is executed".

(2) The following shows whether the positioning control is possible to start/restart or not when selecting "0: Positioning control is not executed".
(a) Start possible
Machine HPR, JOG operation, inching operation, manual pulse generator operation, and current value changing using current value changing start No. (9003)

(b) Start/restart impossible control
When the following cases at block start, condition start, wait start, repeated start, multiple axes simultaneous start and pre-reading start: 1-axis linear control, 2/3/4-axis linear interpolation control, 1/2/3/4-axis fixed-feed control, 2-axis circular interpolation control with sub point designation, 2-axis circular interpolation control with center point designation, 1/2/3/4-axis speed control, speed-position switching control (INC mode/ ABS mode), position-speed switching control, and current value changing using current value changing (No.1 to 600)

(3) When HPR request flag is ON, starting Fast HPR will result in the error "HPR request ON" (error code: 207) despite the setting value of "Operation setting for incompletion of HPR", and Fast HPR will not be executed.

⚠CAUTION

- Do not execute the positioning control in home position return request signal ON for the axis which uses in the positioning control.
  Failure to observe this could lead to an accident such as a collision.

[Pr.56] Speed designation during HP shift

Set the operation speed for when a value other than "0" is set for "[Pr.53] HP shift amount". Select the setting from "[Pr.46] HPR speed" or "[Pr.47] Creep speed".

0 : Designate "[Pr.46] HPR speed" as the setting value.

1 : Designate "[Pr.47] Creep speed" as the setting value.

[Pr.57] Dwell time during HPR retry

When HPR retry is validated (when "1" is set for [Pr.48]), set the stop time after decelerating in 2) and 4) in the following drawing.

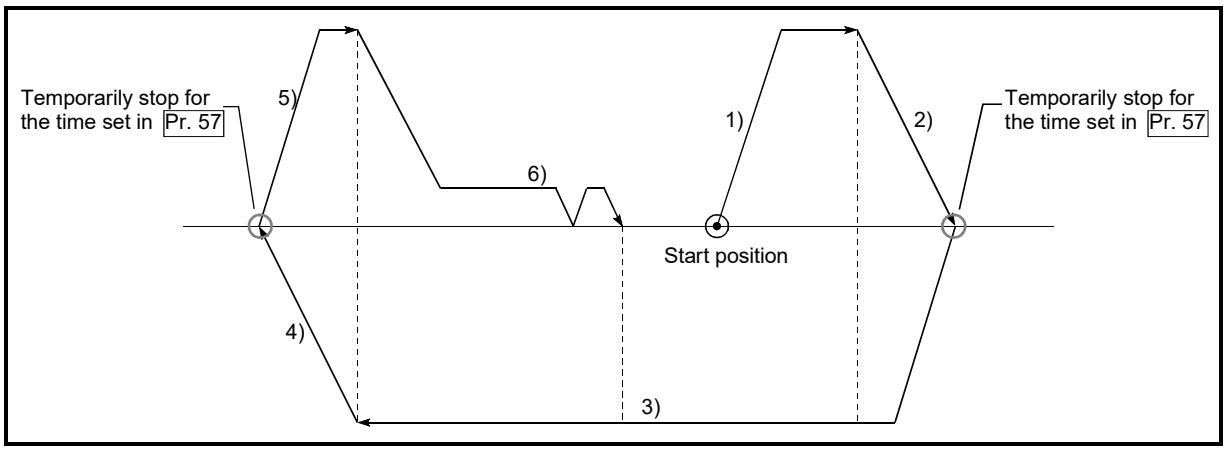

5.2.7 Expansion parameters

Item	Setting value, setting range		Default value	Buffer memory address	
	Value set with GX Works2	Value set with sequence program		QD77MS2 QD77MS4	QD77MS16
[Pr.91] Optional data monitor: Data type setting 1	0 : No setting 1 : Effective load ratio (Note-2) 2 : Regenerative load ratio 3 : Peak load ratio 4 : Load inertia moment ratio (Note-2) 5 : Model loop gain (Note-2) 6 : Bus voltage (Note-2) 7 : Servo motor speed (Note-2) 8 : Encoder multiple revolution counter 9 : Unit power consumption 10 : Instantaneous torque (Note-2) 12 : Servo motor thermistor temperature 13 : Torque Equivalent to Disturbance (Note-2) 14 : Overload alarm margin 15 : Excessive error alarm margin 16 : Settling time 17 : Overshoot amount 18 : Internal temperature of encoder 20 : Position feedback (Note-1) 21 : Encoder position within one revolution (Note-1) 22 : Selected droop pulse (Note-1) 23 : Unit total power consumption (Note-1) 24 : Load-side encoder information 1 (Note-1) 25 : Load-side encoder information 2 (Note-1) 26 : Z-phase counter (Note-1) 27 : Servo motor side/load-side position deviation (Note-1) 28 : Servo motor side/load-side speed deviation (Note-1) 29 : External encoder counter value (Note-1) 30 : Unit power consumption (2 words) (Note-1) Most significant bit + Address value: Optional address of registered monitor	0 1 2 3 4 5 6 7 8 9 10 12 13 14 15 16 17 18 20 21 22 23 24 25 26 27 28 29 30 Most significant bit + Address value	0	100+150n	
[Pr.92] Optional data monitor: Data type setting 2			0	101+150n	
[Pr.93] Optional data monitor: Data type setting 3			0	102+150n	
[Pr.94] Optional data monitor: Data type setting 4			0	103+150n	
[Pr.96] Operation cycle setting	0: 0.88ms 1: 1.77ms	0 1	QD77MS2 : 0 QD77MS4 : 0 QD77MS16: 1	147 (Note-3)	105 (Note-3)
[Pr.97] SSCNET setting	0: SSCNETⅢ 1: SSCNETⅢ/H	0 1	1	106 (Note-3)	
[Pr.114] External command signal compensation valid/invalid setting	0: Invalid 1: Valid	0 1	0	114 (Note-3)	
[Pr.135] Position command error check threshold	-1: Invalid 0 : Default value 1 to 2147483647 (r/min (when a linear servo is used: mm/s))	-1 0 1 to 2147483647	0	136+150n 137+150n	
[Pr.136] Deviation counter error check threshold	-1: Invalid 0 : Default value 1 to 2147483647 (PLS)	-1 0 1 to 2147483647	0	138+150n 139+150n	

n: Axis No. -1

(Note-1): Used point: 2 words
(Note-2): The name differs depending on the connected device.
(Note-3): Only the value specified against the axis 1 is valid.

[Pr.91] Optional data monitor: Data type setting 1 to [Pr.94] Optional data monitor: Data type setting 4

Set the data type monitored in optional data monitor function.

Setting value	Data type	Used point
0	No setting (Note-1)	1 word
1	Effective load ratio (Note-2)	
2	Regenerative load ratio	
3	Peak load ratio	
4	Load inertia moment ratio (Note-2)	
5	Model loop gain (Note-2)	
6	Bus voltage (Note-2)	
7	Servo motor speed (Note-2)	
8	Encoder multiple revolution counter	
9	Unit power consumption	
10	Instantaneous torque (Note-2)	
12	Servo motor thermistor temperature	
13	Torque Equivalent to Disturbance (Note-2)	
14	Overload alarm margin	
15	Excessive error alarm margin	
16	Settling time	
17	Overshoot amount	
18	Internal temperature of encoder	
20	Position feedback	2 words
21	Encoder position within one revolution	
22	Selected droop pulse	
23	Unit total power consumption	
24	Load-side encoder information 1	
25	Load-side encoder information 2	
26	Z-phase counter	
27	Servo motor side/load-side position deviation	
28	Servo motor side/load-side speed deviation	
29	External encoder counter value	
30	Unit power consumption (2 words)	
Most significant bit + Address value	Optional address of registered monitor	–

(Note-1): The stored value of "[Md.109] Regenerative load ratio/Optional data monitor output 1" to "[Md.112] Optional data monitor output 4" is different every data type setting 1 to 4. (Refer to Section 5.6.2)

(Note-2): The name differs depending on the connected device.

POINT

(1) The monitor address of optional data monitor is registered to servo amplifier with initialized communication after power supply ON or PLC CPU reset.
(2) Set the data type of "used point: 2 words" in "[Pr.91] Optional data monitor: Data type setting 1" or "[Pr.93] Optional data monitor: Data type setting 3". If it is set in "[Pr.92] Optional data monitor: Data type setting 2" or "[Pr.94] Optional data monitor: Data type setting 4", the warning "Optional data monitor data type setting error" (warning code: 116) will occur with initialized communication to servo amplifier and "0" will be stored in [Md.109] to [Md.112].
(3) Set "0" in "[Pr.92] Optional data monitor: Data type setting 2" when the data type of "used point: 2 words" is set in "[Pr.91] Optional data monitor: Data type setting 1", and set "0" in "[Pr.94] Optional data monitor: Data type setting 4" when the data type of "used point: 2 words" is set in "[Pr.93] Optional data monitor: Data type setting 3". When setting other than "0", the warning "Optional data monitor data type setting error" (warning code: 116) will occur with initialized communication to servo amplifier and "0" will be stored in [Md.109] to [Md.112].
(4) When the data type of "used point: 2 words" is set, the monitor data of low-order is "[Md.109] Regenerative load ratio/Optional data monitor output 1" or "[Md.111] Peak torque ratio/Optional data monitor output 3".
(5) When directly specifying addresses for each optional data monitor type, specify the addresses in bits 0 to 14 of "[Pr.91] Optional data monitor: Data type setting 1" to "[Pr.94] Optional data monitor: Data type setting 4", and set "1" in bit 15.
(6) When monitoring 2-word data, set the lower data to "[Pr.91] Optional data monitor: Data type setting 1" and the upper data to "[Pr.92] Optional data monitor: Data type setting 2", or the lower data to "[Pr.93] Optional data monitor: Data type setting 3" and the upper data to "[Pr.94] Optional data monitor: Data type setting 4".
(7) Refer to Section 14.11 for the data type that can be monitored on each servo amplifier. When the data type that cannot be monitored is set, "0" is stored to the monitor output.

[Pr.96] Operation cycle setting

Set the operation cycle. (Only the value specified against the axis 1 is valid.)
0: 0.88ms
1: 1.77ms

POINT

(1) In this parameter, the value set in flash ROM of Simple Motion module is valid at power supply ON or PLC CPU reset. Fetch by PLC READY signal OFF to ON is not executed. Execute flash ROM writing to change after setting a value to buffer memory. Confirm the current operation cycle in "[Md.132] Operation cycle setting".
(2) When "0: 0.88ms" is set, confirm that "[Md.133] Operation cycle over flag" does not turn ON. If the flag is ON, the operation cycle over has been generated. Correct the positioning content or set "1: 1.77ms".

[Pr.97] SSCNET setting

Set the servo network. (Only the value specified against the axis 1 is valid.)
0: SSCNETⅢ
1: SSCNETⅢ/H

The connectable servo amplifier differs by this parameter. When unconnectable servo amplifier is set in "[Pr.100] Servo series", the error "SSCNET setting error" (error code: 1003) occurs, and communication with the servo amplifier is not executed.
The following shows about this parameter and connectable servo amplifier (setting value of "[Pr.100] Servo series").

Setting value of "[Pr.97] SSCNET setting"	Servo amplifier	Setting value of "[Pr.100] Servo series"
0: SSCNETⅢ	MR-J3(W)-B	1: MR-J3-_B_, MR-J3W-_B (2-axis type) 3: MR-J3-_B_-RJ006 (For fully closed loop control) MR-J3-_BS_ (For safety servo) 4: MR-J3-_B_-RJ004 (For linear servo) 6: MR-J3-_B-RJ080W (For direct drive motor)
	FR-A700	64: FR-A700 series (Inverter)
	VCII (CKD NIKKI DENSO)	96: VCII series (manufactured by CKD NIKKI DENSO CO., LTD.)
	VPH (CKD NIKKI DENSO)	99: VPH series (manufactured by CKD NIKKI DENSO CO., LTD.)
	Virtual servo amplifier	4097: Virtual servo amplifier (MR-J3)
1: SSCNETⅢ/H	MR-J4(W)-B	32: MR-J4-_B_(-RJ), MR-J4W_-_B (2-, 3-axis type)
	MR-JE-B(F)	48: MR-JE-_B(F)
	VCII (CKD NIKKI DENSO)	96: VCII series (manufactured by CKD NIKKI DENSO CO., LTD.)
	VPH (CKD NIKKI DENSO)	99: VPH series (manufactured by CKD NIKKI DENSO CO., LTD.)
	AlphaStep/5-Phase (ORIENTAL MOTOR)	97: AlphaStep/5-Phase (manufactured by ORIENTAL MOTOR Co., Ltd.)
	IAI electric actuator controller	98: IAI electric actuator controller (manufactured by IAI Corporation)
	MR-J5(W)-B	128: MR-J5-_B_(-RJ), MR-J5W_-_B (2-, 3-axis type)
	Virtual servo amplifier	4128: Virtual servo amplifier (MR-J4) 4224: Virtual servo amplifier (MR-J5)

POINT

In this parameter, the value set in flash ROM of Simple Motion module is valid at power supply ON or PLC CPU reset. Fetch by PLC READY signal OFF to ON is not executed. Execute flash ROM writing to change after setting a value to buffer memory.

[Pr.114] External command signal compensation valid/invalid setting

Set the input compensation of external command input signal valid/invalid. (Only the value specified against the axis 1 is valid.)

0: Invalid

1: Valid (The response time from the external command signal is compensated and the latch accuracy will be enhanced.)

Note) If the setting is other than "0" and "1", operation is performed with the setting regarded as "0: Invalid".

POINT
In this parameter, the value set in flash ROM of Simple Motion module is valid at power supply ON or PLC CPU reset. Fetch by PLC READY signal OFF to ON is not executed. Execute flash ROM writing to change the value after setting a value to buffer memory.

[Pr.135] Position command error check threshold

Set the threshold to check the position command for errors with the servo amplifier command value error check function.

If the set value is outside the range, it operates with the default value.

-1: Invalid

0: Default value (Maximum motor speed × 2.4 (r/min))

1 to 2147483647 (r/min (when a linear servo is used: mm/s))

POINT
In this parameter, the value set in flash ROM of Simple Motion module is valid at power supply ON. To perform check with a value other than the default threshold, set a value with a margin by using "[Md.103] Motor rotation speed" as a guide.

[Pr.136] Deviation counter error check threshold

Set the threshold to check the deviation counter for errors with the servo amplifier command value error check function.

If the set value is outside the range, it operates with the default value.

-1: Invalid

0: Default value (SCNETⅢ: 262144 × 3 (PLS), SSCNETⅢ/H: 4194304 × 3 (PLS))

1 to 2147483647 (PLS)

POINT
In this parameter, the value set in flash ROM of Simple Motion module is valid at power supply ON. To perform check with a value other than the default threshold, set a value with a margin by using "[Md.102] Deviation counter value" as a guide.

5.2.8 Servo parameters

(1) Servo series

Item		Setting details	Setting range	Default value	Buffer memory address	
					QD77MS2 QD77MS4	QD77MS16
[Pr.100]	Servo series	Used to select the servo amplifier series to connect to the Simple Motion module. [POINT] • Be sure to set up servo series. Communication with servo amplifier isn't started by the initial value "0" in default value. (The LED indication of servo amplifier indicates "Ab".) • The connectable servo amplifier differs by the setting of "[Pr.97] SSCNET setting".	0: Servo series is not set 1: MR-J3-_B_, MR-J3W-_B (2-axis type) 3: MR-J3-_B_-RJ006 (For fully closed loop control) MR-J3-_BS_ (For safety servo) 4: MR-J3-_B_-RJ004 (For linear servo) 6: MR-J3-_B-RJ080W (For direct drive motor) 32: MR-J4-_B_(-RJ), MR-J4W_-_B (2-axis type and 3-axis type) 48: MR-JE-_B(F) 64: FR-A700 series (Inverter) 96: VCII series (manufactured by CKD NIKKI DENSO CO., LTD.) 97: AlphaStep/5-Phase (manufactured by ORIENTAL MOTOR Co., Ltd.) 98: IAI electric actuator controller (manufactured by IAI Corporation) 99: VPH series (manufactured by CKD NIKKI DENSO CO., LTD.) 128: MR-J5-_B_(-RJ), MR-J5W_-_B (2-, 3-axis type) 4097: Virtual servo amplifier (MR-J3) 4128: Virtual servo amplifier (MR-J4) 4224: Virtual servo amplifier (MR-J5)	0	30100+200n	28400+100n

n: Axis No. -1

(2) Parameters of MR-J5(W)-B

For details of the setting items, refer to the manual of each servo amplifier.
Since the servo parameters of MR-J5(W)-B are not in the buffer memory, use GX Works2 or axis control data to set them. Refer to "Appendix 6.6 Connection with MR-J5(W)-B" for details.
The default value of each parameter indicates the value to be stored in the internal memory area. Do not change other than the buffer memory addresses of the parameters described in each servo amplifier manual.

POINT

Set the parameter value and switch power off once (The parameter is transferred to servo amplifier from Simple Motion module), and then switch it on again to make that parameter setting valid.

(3) Parameters of MR-J4(W)-B/MR-JE-B(F)

The parameter list for MR-J4(W)-B/MR-JE-B(F) is shown below.
Refer to each servo amplifier instruction manual for details of setting items.
Do not change other than the buffer memory addresses of the parameters described in each servo amplifier instruction manual.

POINT

Set the parameter value and switch power off once (The parameter is transferred to servo amplifier from Simple Motion module), and then switch it on again to make that parameter setting valid.

(a) Basic setting parameters

Servo amplifier Parameter No.	Buffer memory address	
	QD77MS2 QD77MS4	QD77MS16
PA01	30101+200n	28401+100n
PA02	30102+200n	28402+100n
PA03	30103+200n	28403+100n
PA04	30104+200n	28404+100n
PA05	30105+200n	28405+100n
PA06	30106+200n	28406+100n
PA07	30107+200n	28407+100n
PA08	30108+200n	28408+100n
PA09	30109+200n	28409+100n
PA10	30110+200n	28410+100n
PA11	30111+200n	28411+100n
PA12	30112+200n	28412+100n
PA13	30113+200n	28413+100n
PA14	30114+200n	28414+100n
PA15	30115+200n	28415+100n
PA16	30116+200n	28416+100n
PA17	30117+200n	28417+100n

Servo amplifier Parameter No.	Buffer memory address	
	QD77MS2 QD77MS4	QD77MS16
PA18	30118+200n	28418+100n
PA19	30932+50n	Set with GX Works2
PA20	64400+250n	64400+70n
PA21	64401+250n	64401+70n
PA22	64402+250n	64402+70n
PA23	64403+250n	64403+70n
PA24	64404+250n	64404+70n
PA25	64405+250n	64405+70n
PA26	64406+250n	64406+70n
PA27	64407+250n	64407+70n
PA28	64408+250n	64408+70n
PA29	64409+250n	64409+70n
PA30	64410+250n	64410+70n
PA31	64411+250n	64411+70n
PA32	64412+250n	64412+70n

n: Axis No.-1

(b) Gain/filter setting parameters

Servo amplifier Parameter No.	Buffer memory address	
	QD77MS2 QD77MS4	QD77MS16
PB01	30119+200n	28419+100n
PB02	30120+200n	28420+100n
PB03	30121+200n	28421+100n
PB04	30122+200n	28422+100n
PB05	30123+200n	28423+100n
PB06	30124+200n	28424+100n
PB07	30125+200n	28425+100n
PB08	30126+200n	28426+100n
PB09	30127+200n	28427+100n
PB10	30128+200n	28428+100n
PB11	30129+200n	28429+100n
PB12	30130+200n	28430+100n
PB13	30131+200n	28431+100n
PB14	30132+200n	28432+100n
PB15	30133+200n	28433+100n
PB16	30134+200n	28434+100n
PB17	30135+200n	28435+100n
PB18	30136+200n	28436+100n
PB19	30137+200n	28437+100n
PB20	30138+200n	28438+100n
PB21	30139+200n	28439+100n
PB22	30140+200n	28440+100n
PB23	30141+200n	28441+100n
PB24	30142+200n	28442+100n
PB25	30143+200n	28443+100n
PB26	30144+200n	28444+100n
PB27	30145+200n	28445+100n
PB28	30146+200n	28446+100n
PB29	30147+200n	28447+100n
PB30	30148+200n	28448+100n
PB31	30149+200n	28449+100n
PB32	30150+200n	28450+100n

Servo amplifier Parameter No.	Buffer memory address	
	QD77MS2 QD77MS4	QD77MS16
PB33	30151+200n	28451+100n
PB34	30152+200n	28452+100n
PB35	30153+200n	28453+100n
PB36	30154+200n	28454+100n
PB37	30155+200n	28455+100n
PB38	30156+200n	28456+100n
PB39	30157+200n	28457+100n
PB40	30158+200n	28458+100n
PB41	30159+200n	28459+100n
PB42	30160+200n	28460+100n
PB43	30161+200n	28461+100n
PB44	30162+200n	28462+100n
PB45	30163+200n	28463+100n
PB46	64413+250n	64413+70n
PB47	64414+250n	64414+70n
PB48	64415+250n	64415+70n
PB49	64416+250n	64416+70n
PB50	64417+250n	64417+70n
PB51	64418+250n	64418+70n
PB52	64419+250n	64419+70n
PB53	64420+250n	64420+70n
PB54	64421+250n	64421+70n
PB55	64422+250n	64422+70n
PB56	64423+250n	64423+70n
PB57	64424+250n	64424+70n
PB58	64425+250n	64425+70n
PB59	64426+250n	64426+70n
PB60	64427+250n	64427+70n
PB61	64428+250n	64428+70n
PB62	64429+250n	64429+70n
PB63	64430+250n	64430+70n
PB64	64431+250n	64431+70n

n: Axis No.-1

(c) Extension setting parameters

Servo amplifier Parameter No.	Buffer memory address	
	QD77MS2 QD77MS4	QD77MS16
PC01	30164+200n	28464+100n
PC02	30165+200n	28465+100n
PC03	30166+200n	28466+100n
PC04	30167+200n	28467+100n
PC05	30168+200n	28468+100n
PC06	30169+200n	28469+100n
PC07	30170+200n	28470+100n
PC08	30171+200n	28471+100n
PC09	30172+200n	28472+100n
PC10	30173+200n	28473+100n
PC11	30174+200n	28474+100n
PC12	30175+200n	28475+100n
PC13	30176+200n	28476+100n
PC14	30177+200n	28477+100n
PC15	30178+200n	28478+100n
PC16	30179+200n	28479+100n
PC17	30180+200n	28480+100n
PC18	30181+200n	28481+100n
PC19	30182+200n	28482+100n
PC20	30183+200n	28483+100n
PC21	30184+200n	28484+100n
PC22	30185+200n	28485+100n
PC23	30186+200n	28486+100n
PC24	30187+200n	28487+100n
PC25	30188+200n	28488+100n
PC26	30189+200n	28489+100n
PC27	30190+200n	28490+100n
PC28	30191+200n	28491+100n
PC29	30192+200n	28492+100n
PC30	30193+200n	28493+100n
PC31	30194+200n	28494+100n
PC32	30195+200n	28495+100n

Servo amplifier Parameter No.	Buffer memory address	
	QD77MS2 QD77MS4	QD77MS16
PC33	64432+250n	64432+70n
PC34	64433+250n	64433+70n
PC35	64434+250n	64434+70n
PC36	64435+250n	64435+70n
PC37	64436+250n	64436+70n
PC38	64437+250n	64437+70n
PC39	64438+250n	64438+70n
PC40	64439+250n	64439+70n
PC41	64440+250n	64440+70n
PC42	64441+250n	64441+70n
PC43	64442+250n	64442+70n
PC44	64443+250n	64443+70n
PC45	64444+250n	64444+70n
PC46	64445+250n	64445+70n
PC47	64446+250n	64446+70n
PC48	64447+250n	64447+70n
PC49	64448+250n	64448+70n
PC50	64449+250n	64449+70n
PC51	64450+250n	64450+70n
PC52	64451+250n	64451+70n
PC53	64452+250n	64452+70n
PC54	64453+250n	64453+70n
PC55	64454+250n	64454+70n
PC56	64455+250n	64455+70n
PC57	64456+250n	64456+70n
PC58	64457+250n	64457+70n
PC59	64458+250n	64458+70n
PC60	64459+250n	64459+70n
PC61	64460+250n	64460+70n
PC62	64461+250n	64461+70n
PC63	64462+250n	64462+70n
PC64	64463+250n	64463+70n

n: Axis No.-1

(d) I/O setting parameters

Servo amplifier Parameter No.	Buffer memory address	
	QD77MS2 QD77MS4	QD77MS16
PD01	30196+200n	Set with GX Works2
PD02	30197+200n	
PD03	30198+200n	
PD04	30199+200n	
PD05	30200+200n	
PD06	30201+200n	
PD07	30202+200n	
PD08	30203+200n	
PD09	30204+200n	
PD10	30205+200n	
PD11	30206+200n	
PD12	30207+200n	
PD13	30208+200n	
PD14	30209+200n	
PD15	30210+200n	
PD16	30211+200n	
PD17	30212+200n	
PD18	30213+200n	
PD19	30214+200n	
PD20	30215+200n	
PD21	30216+200n	
PD22	30217+200n	
PD23	30218+200n	
PD24	30219+200n	

Servo amplifier Parameter No.	Buffer memory address	
	QD77MS2 QD77MS4	QD77MS16
PD25	30220+200n	Set with GX Works2
PD26	30221+200n	
PD27	30222+200n	
PD28	30223+200n	
PD29	30224+200n	
PD30	30225+200n	
PD31	30226+200n	
PD32	30227+200n	
PD33	64464+250n	
PD34	64465+250n	
PD35	64466+250n	
PD36	64467+250n	
PD37	64468+250n	
PD38	64469+250n	
PD39	64470+250n	
PD40	64471+250n	
PD41	64472+250n	
PD42	64473+250n	
PD43	64474+250n	
PD44	64475+250n	
PD45	64476+250n	
PD46	64477+250n	
PD47	64478+250n	
PD48	64479+250n	

n: Axis No.-1

(e) Extension setting 2 parameters

Servo amplifier Parameter No.	Buffer memory address	
	QD77MS2 QD77MS4	QD77MS16
PE01	30228+200n	Set with GX Works2
PE02	30229+200n	
PE03	30230+200n	
PE04	30231+200n	
PE05	30232+200n	
PE06	30233+200n	
PE07	30234+200n	
PE08	30235+200n	
PE09	30236+200n	
PE10	30237+200n	
PE11	30238+200n	
PE12	30239+200n	
PE13	30240+200n	
PE14	30241+200n	
PE15	30242+200n	
PE16	30243+200n	
PE17	30244+200n	
PE18	30245+200n	
PE19	30246+200n	
PE20	30247+200n	
PE21	30248+200n	
PE22	30249+200n	
PE23	30250+200n	
PE24	30251+200n	
PE25	30252+200n	
PE26	30253+200n	
PE27	30254+200n	
PE28	30255+200n	
PE29	30256+200n	
PE30	30257+200n	
PE31	30258+200n	
PE32	30259+200n	

Servo amplifier Parameter No.	Buffer memory address	
	QD77MS2 QD77MS4	QD77MS16
PE33	30260+200n	Set with GX Works2
PE34	30261+200n	
PE35	30262+200n	
PE36	30263+200n	
PE37	30264+200n	
PE38	30265+200n	
PE39	30266+200n	
PE40	30267+200n	
PE41	64480+250n	
PE42	64481+250n	
PE43	64482+250n	
PE44	64483+250n	
PE45	64484+250n	
PE46	64485+250n	
PE47	64486+250n	
PE48	64487+250n	
PE49	64488+250n	
PE50	64489+250n	
PE51	64490+250n	
PE52	64491+250n	
PE53	64492+250n	
PE54	64493+250n	
PE55	64494+250n	
PE56	64495+250n	
PE57	64496+250n	
PE58	64497+250n	
PE59	64498+250n	
PE60	64499+250n	
PE61	64500+250n	
PE62	64501+250n	
PE63	64502+250n	
PE64	64503+250n	

n: Axis No.-1

(f) Special setting parameters

Servo amplifier Parameter No.	Buffer memory address	
	QD77MS2 QD77MS4	QD77MS16
PS01	30268+200n	Set with GX Works2
PS02	30269+200n	
PS03	30270+200n	
PS04	30271+200n	
PS05	30272+200n	
PS06	30273+200n	
PS07	30274+200n	
PS08	30275+200n	
PS09	30276+200n	
PS10	30277+200n	
PS11	30278+200n	
PS12	30279+200n	
PS13	30280+200n	
PS14	30281+200n	
PS15	30282+200n	
PS16	30283+200n	

Servo amplifier Parameter No.	Buffer memory address	
	QD77MS2 QD77MS4	QD77MS16
PS17	30284+200n	Set with GX Works2
PS18	30285+200n	
PS19	30286+200n	
PS20	30287+200n	
PS21	30288+200n	
PS22	30289+200n	
PS23	30290+200n	
PS24	30291+200n	
PS25	30292+200n	
PS26	30293+200n	
PS27	30294+200n	
PS28	30295+200n	
PS29	30296+200n	
PS30	30297+200n	
PS31	30298+200n	
PS32	30299+200n	

n: Axis No.-1

(g) Extension setting 3 parameters

Servo amplifier Parameter No.	Buffer memory address	
	QD77MS2 QD77MS4	QD77MS16
PF01	30900+50n	Set with GX Works2
PF02	30901+50n	
PF03	30902+50n	
PF04	30903+50n	
PF05	30904+50n	
PF06	30905+50n	
PF07	30906+50n	
PF08	30907+50n	
PF09	30908+50n	
PF10	30909+50n	
PF11	30910+50n	
PF12	30911+50n	
PF13	30912+50n	
PF14	30913+50n	
PF15	30914+50n	
PF16	30915+50n	
PF17	64504+250n	
PF18	64505+250n	
PF19	64506+250n	
PF20	64507+250n	
PF21	64508+250n	
PF22	64509+250n	
PF23	64510+250n	
PF24	64511+250n	

Servo amplifier Parameter No.	Buffer memory address	
	QD77MS2 QD77MS4	QD77MS16
PF25	64512+250n	Set with GX Works2
PF26	64513+250n	
PF27	64514+250n	
PF28	64515+250n	
PF29	64516+250n	
PF30	64517+250n	
PF31	64518+250n	
PF32	64519+250n	
PF33	64520+250n	
PF34	64521+250n	
PF35	64522+250n	
PF36	64523+250n	
PF37	64524+250n	
PF38	64525+250n	
PF39	64526+250n	
PF40	64527+250n	
PF41	64528+250n	
PF42	64529+250n	
PF43	64530+250n	
PF44	64531+250n	
PF45	64532+250n	
PF46	64533+250n	
PF47	64534+250n	
PF48	64535+250n	

n: Axis No.-1

(h) Option setting parameters

Servo amplifier Parameter No.	Buffer memory address	
	QD77MS2 QD77MS4	QD77MS16
Po01	30916+50n	Set with GX Works2
Po02	30917+50n	
Po03	30918+50n	
Po04	30919+50n	
Po05	30920+50n	
Po06	30921+50n	
Po07	30922+50n	
Po08	30923+50n	
Po09	30924+50n	
Po10	30925+50n	
Po11	30926+50n	
Po12	30927+50n	
Po13	30928+50n	
Po14	30929+50n	
Po15	30930+50n	
Po16	30931+50n	

Servo amplifier Parameter No.	Buffer memory address	
	QD77MS2 QD77MS4	QD77MS16
Po17	64536+250n	Set with GX Works2
Po18	64537+250n	
Po19	64538+250n	
Po20	64539+250n	
Po21	64540+250n	
Po22	64541+250n	
Po23	64542+250n	
Po24	64543+250n	
Po25	64544+250n	
Po26	64545+250n	
Po27	64546+250n	
Po28	64547+250n	
Po29	64548+250n	
Po30	64549+250n	
Po31	64550+250n	
Po32	64551+250n	

n: Axis No.-1

(i) Linear servo motor/DD motor setting parameters

Servo amplifier Parameter No.	Buffer memory address	
	QD77MS2 QD77MS4	QD77MS16
PL01	64552+250n	Set with GX Works2
PL02	64553+250n	
PL03	64554+250n	
PL04	64555+250n	
PL05	64556+250n	
PL06	64557+250n	
PL07	64558+250n	
PL08	64559+250n	
PL09	64560+250n	
PL10	64561+250n	
PL11	64562+250n	
PL12	64563+250n	
PL13	64564+250n	
PL14	64565+250n	
PL15	64566+250n	
PL16	64567+250n	
PL17	64568+250n	
PL18	64569+250n	
PL19	64570+250n	
PL20	64571+250n	
PL21	64572+250n	
PL22	64573+250n	
PL23	64574+250n	
PL24	64575+250n	

Servo amplifier Parameter No.	Buffer memory address	
	QD77MS2 QD77MS4	QD77MS16
PL25	64576+250n	Set with GX Works2
PL26	64577+250n	
PL27	64578+250n	
PL28	64579+250n	
PL29	64580+250n	
PL30	64581+250n	
PL31	64582+250n	
PL32	64583+250n	
PL33	64584+250n	
PL34	64585+250n	
PL35	64586+250n	
PL36	64587+250n	
PL37	64588+250n	
PL38	64589+250n	
PL39	64590+250n	
PL40	64591+250n	
PL41	64592+250n	
PL42	64593+250n	
PL43	64594+250n	
PL44	64595+250n	
PL45	64596+250n	
PL46	64597+250n	
PL47	64598+250n	
PL48	64599+250n	

n: Axis No.-1

(4) Parameters of MR-J3(W)-B

The parameter list for MR-J3(W)-B is shown below.
Refer to each servo amplifier instruction manual for details of setting items.
Do not change other than the buffer memory addresses of the parameters described in each servo amplifier instruction manual.

POINT

Set the parameter value and switch power off once (The parameter is transferred to servo amplifier from Simple Motion module), and then switch it on again to make that parameter setting valid.

(a) Basic setting parameters

Servo amplifier Parameter No.	Buffer memory address	
	QD77MS2 QD77MS4	QD77MS16
PA01	30101+200n	28401+100n
PA02	30102+200n	28402+100n
PA03	30103+200n	28403+100n
PA04	30104+200n	28404+100n
PA05	30105+200n	28405+100n
PA06	30106+200n	28406+100n
PA07	30107+200n	28407+100n
PA08	30108+200n	28408+100n
PA09	30109+200n	28409+100n
PA10	30110+200n	28410+100n

Servo amplifier Parameter No.	Buffer memory address	
	QD77MS2 QD77MS4	QD77MS16
PA11	30111+200n	28411+100n
PA12	30112+200n	28412+100n
PA13	30113+200n	28413+100n
PA14	30114+200n	28414+100n
PA15	30115+200n	28415+100n
PA16	30116+200n	28416+100n
PA17	30117+200n	28417+100n
PA18	30118+200n	28418+100n
PA19	30932+50n	Set with GX Works2

n: Axis No.-1

(b) Gain/filter parameters

Servo amplifier Parameter No.	Buffer memory address	
	QD77MS2 QD77MS4	QD77MS16
PB01	30119+200n	28419+100n
PB02	30120+200n	28420+100n
PB03	30121+200n	28421+100n
PB04	30122+200n	28422+100n
PB05	30123+200n	28423+100n
PB06	30124+200n	28424+100n
PB07	30125+200n	28425+100n
PB08	30126+200n	28426+100n
PB09	30127+200n	28427+100n
PB10	30128+200n	28428+100n
PB11	30129+200n	28429+100n
PB12	30130+200n	28430+100n
PB13	30131+200n	28431+100n
PB14	30132+200n	28432+100n
PB15	30133+200n	28433+100n
PB16	30134+200n	28434+100n
PB17	30135+200n	28435+100n
PB18	30136+200n	28436+100n
PB19	30137+200n	28437+100n
PB20	30138+200n	28438+100n
PB21	30139+200n	28439+100n
PB22	30140+200n	28440+100n
PB23	30141+200n	28441+100n

Servo amplifier Parameter No.	Buffer memory address	
	QD77MS2 QD77MS4	QD77MS16
PB24	30142+200n	28442+100n
PB25	30143+200n	28443+100n
PB26	30144+200n	28444+100n
PB27	30145+200n	28445+100n
PB28	30146+200n	28446+100n
PB29	30147+200n	28447+100n
PB30	30148+200n	28448+100n
PB31	30149+200n	28449+100n
PB32	30150+200n	28450+100n
PB33	30151+200n	28451+100n
PB34	30152+200n	28452+100n
PB35	30153+200n	28453+100n
PB36	30154+200n	28454+100n
PB37	30155+200n	28455+100n
PB38	30156+200n	28456+100n
PB39	30157+200n	28457+100n
PB40	30158+200n	28458+100n
PB41	30159+200n	28459+100n
PB42	30160+200n	28460+100n
PB43	30161+200n	28461+100n
PB44	30162+200n	28462+100n
PB45	30163+200n	28463+100n

n: Axis No.-1

(c) Expansion setting parameters

Servo amplifier Parameter No.	Buffer memory address	
	QD77MS2 QD77MS4	QD77MS16
PC01	30164+200n	28464+100n
PC02	30165+200n	28465+100n
PC03	30166+200n	28466+100n
PC04	30167+200n	28467+100n
PC05	30168+200n	28468+100n
PC06	30169+200n	28469+100n
PC07	30170+200n	28470+100n
PC08	30171+200n	28471+100n
PC09	30172+200n	28472+100n
PC10	30173+200n	28473+100n
PC11	30174+200n	28474+100n
PC12	30175+200n	28475+100n
PC13	30176+200n	28476+100n
PC14	30177+200n	28477+100n
PC15	30178+200n	28478+100n
PC16	30179+200n	28479+100n

Servo amplifier Parameter No.	Buffer memory address	
	QD77MS2 QD77MS4	QD77MS16
PC17	30180+200n	28480+100n
PC18	30181+200n	28481+100n
PC19	30182+200n	28482+100n
PC20	30183+200n	28483+100n
PC21	30184+200n	28484+100n
PC22	30185+200n	28485+100n
PC23	30186+200n	28486+100n
PC24	30187+200n	28487+100n
PC25	30188+200n	28488+100n
PC26	30189+200n	28489+100n
PC27	30190+200n	28490+100n
PC28	30191+200n	28491+100n
PC29	30192+200n	28492+100n
PC30	30193+200n	28493+100n
PC31	30194+200n	28494+100n
PC32	30195+200n	28495+100n

n: Axis No.-1

(d) Input/output setting parameters

Servo amplifier Parameter No.	Buffer memory address	
	QD77MS2 QD77MS4	QD77MS16
PD01	30196+200n	Set with GX Works2
PD02	30197+200n	
PD03	30198+200n	
PD04	30199+200n	
PD 05	30200+200n	
PD06	30201+200n	
PD07	30202+200n	
PD08	30203+200n	
PD09	30204+200n	
PD10	30205+200n	
PD11	30206+200n	
PD12	30207+200n	
PD13	30208+200n	
PD14	30209+200n	
PD15	30210+200n	
PD16	30211+200n	

Servo amplifier Parameter No.	Buffer memory address	
	QD77MS2 QD77MS4	QD77MS16
PD17	30212+200n	Set with GX Works2
PD18	30213+200n	
PD19	30214+200n	
PD20	30215+200n	
PD21	30216+200n	
PD22	30217+200n	
PD23	30218+200n	
PD24	30219+200n	
PD25	30220+200n	
PD26	30221+200n	
PD27	30222+200n	
PD28	30223+200n	
PD29	30224+200n	
PD30	30225+200n	
PD31	30226+200n	
PD32	30227+200n	

n: Axis No.-1

(e) Extension control parameters

Servo amplifier Parameter No.	Buffer memory address	
	QD77MS2 QD77MS4	QD77MS16
PE01	30228+200n	Set with GX Works2
PE02	30229+200n	
PE03	30230+200n	
PE04	30231+200n	
PE05	30232+200n	
PE06	30233+200n	
PE07	30234+200n	
PE08	30235+200n	
PE09	30236+200n	
PE10	30237+200n	
PE11	30238+200n	
PE12	30239+200n	
PE13	30240+200n	
PE14	30241+200n	
PE15	30242+200n	
PE16	30243+200n	
PE17	30244+200n	
PE18	30245+200n	
PE19	30246+200n	
PE20	30247+200n	

Servo amplifier Parameter No.	Buffer memory address	
	QD77MS2 QD77MS4	QD77MS16
PE21	30248+200n	Set with GX Works2
PE22	30249+200n	
PE23	30250+200n	
PE24	30251+200n	
PE25	30252+200n	
PE26	30253+200n	
PE27	30254+200n	
PE28	30255+200n	
PE29	30256+200n	
PE30	30257+200n	
PE31	30258+200n	
PE32	30259+200n	
PE33	30260+200n	
PE34	30261+200n	
PE35	30262+200n	
PE36	30263+200n	
PE37	30264+200n	
PE38	30265+200n	
PE39	30266+200n	
PE40	30267+200n	

n: Axis No.-1

(f) Special setting parameters

Servo amplifier Parameter No.	Buffer memory address	
	QD77MS2 QD77MS4	QD77MS16
PS01	30268+200n	Set with GX Works2
PS02	30269+200n	
PS03	30270+200n	
PS04	30271+200n	
PS05	30272+200n	
PS06	30273+200n	
PS07	30274+200n	
PS08	30275+200n	
PS09	30276+200n	
PS10	30277+200n	
PS11	30278+200n	
PS12	30279+200n	
PS13	30280+200n	
PS14	30281+200n	
PS15	30282+200n	
PS16	30283+200n	

Servo amplifier Parameter No.	Buffer memory address	
	QD77MS2 QD77MS4	QD77MS16
PS17	30284+200n	Set with GX Works2
PS18	30285+200n	
PS19	30286+200n	
PS20	30287+200n	
PS21	30288+200n	
PS22	30289+200n	
PS23	30290+200n	
PS24	30291+200n	
PS25	30292+200n	
PS26	30293+200n	
PS27	30294+200n	
PS28	30295+200n	
PS29	30296+200n	
PS30	30297+200n	
PS31	30298+200n	
PS32	30299+200n	

n: Axis No.-1

(g) Other setting parameters

Servo amplifier Parameter No.	Buffer memory address	
	QD77MS2 QD77MS4	QD77MS16
PF01	30900+50n	Set with GX Works2
PF02	30901+50n	
PF03	30902+50n	
PF04	30903+50n	
PF05	30904+50n	
PF06	30905+50n	
PF07	30906+50n	
PF08	30907+50n	

Servo amplifier Parameter No.	Buffer memory address	
	QD77MS2 QD77MS4	QD77MS16
PF09	30908+50n	Set with GX Works2
PF10	30909+50n	
PF11	30910+50n	
PF12	30911+50n	
PF13	30912+50n	
PF14	30913+50n	
PF15	30914+50n	
PF16	30915+50n	

n: Axis No.-1

(h) Option unit parameters

Servo amplifier Parameter No.	Buffer memory address	
	QD77MS2 QD77MS4	QD77MS16
Po01	30916+50n	Set with GX Works2
Po02	30917+50n	
Po03	30918+50n	
Po04	30919+50n	
Po05	30920+50n	
Po06	30921+50n	
Po07	30922+50n	
Po08	30923+50n	

Servo amplifier Parameter No.	Buffer memory address	
	QD77MS2 QD77MS4	QD77MS16
Po09	30924+50n	Set with GX Works2
Po10	30925+50n	
Po11	30926+50n	
Po12	30927+50n	
Po13	30928+50n	
Po14	30929+50n	
Po15	30930+50n	
Po16	30931+50n	

n: Axis No.-1

5.3 List of positioning data

Before explaining the positioning data setting items [Da.1] to [Da.10], [Da.20] to [Da.22] the configuration of the positioning data will be shown below.
The positioning data stored in the buffer memory of Simple Motion module has the following type of configuration.

• QD77MS2/QD77MS4

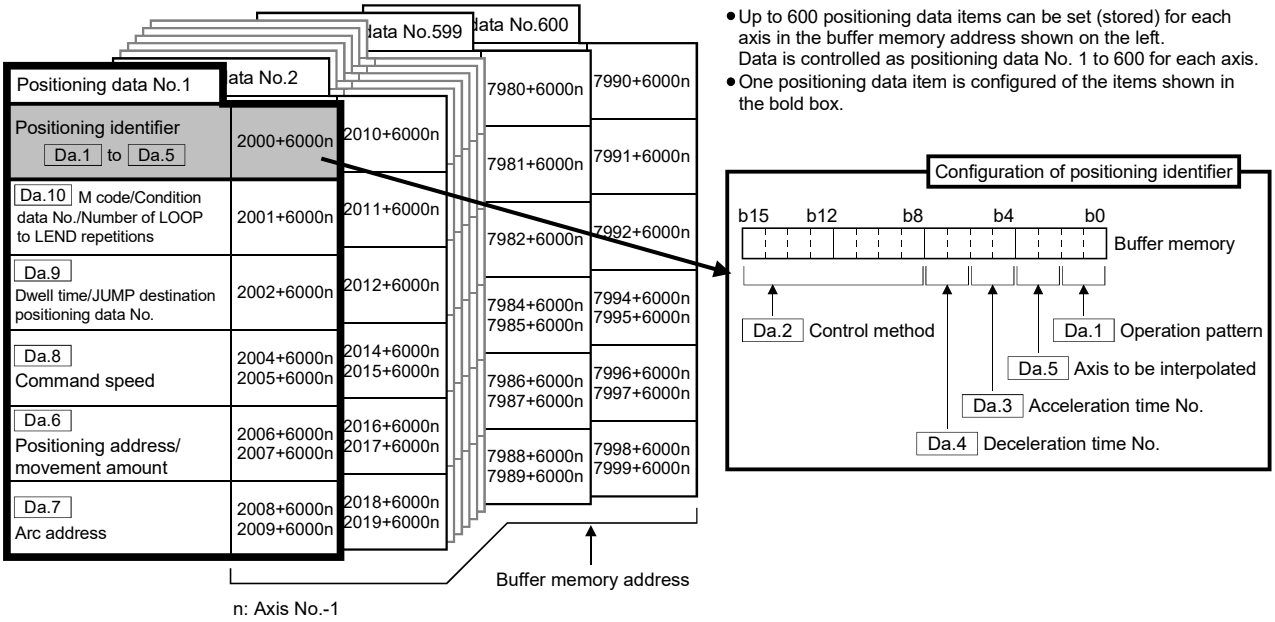

• QD77MS16

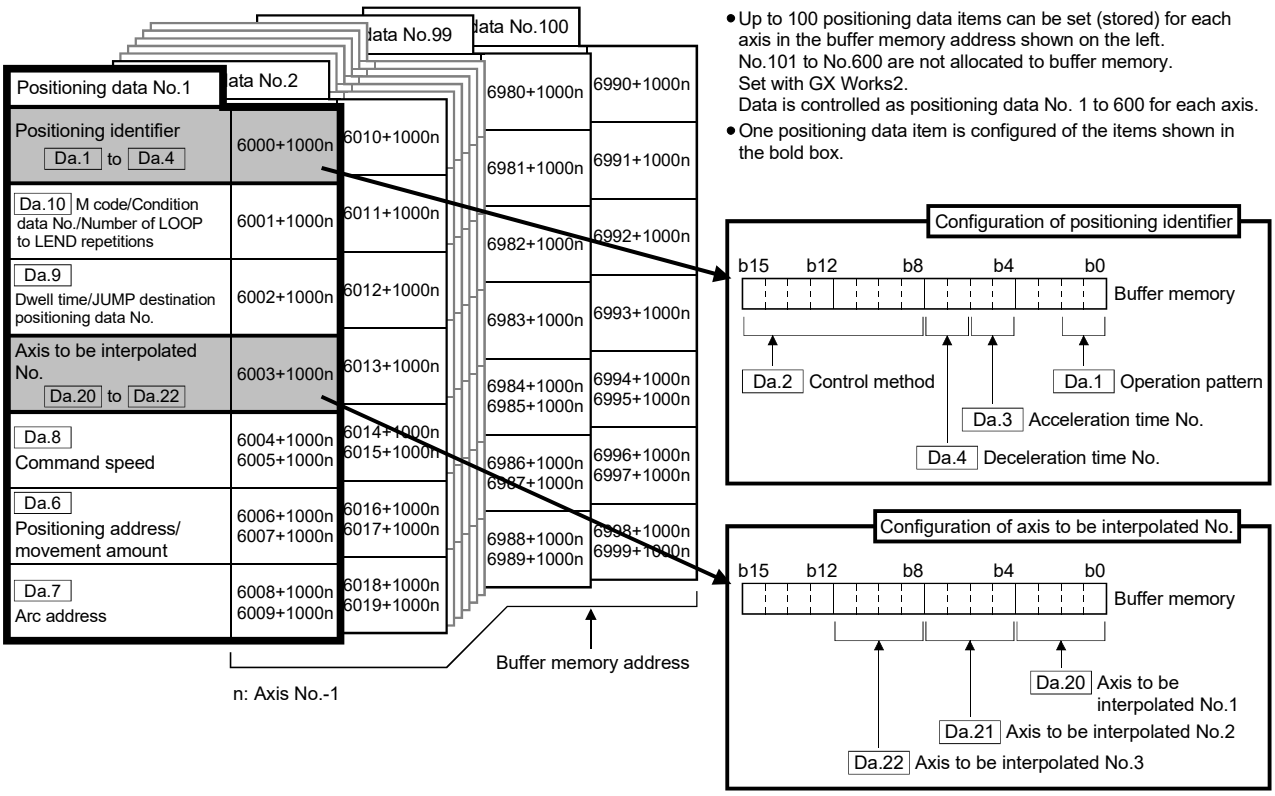

The descriptions that follow relate to the positioning data set items [Da.1] to [Da.10], [Da.20] to [Da.22].
(The buffer memory addresses shown are those of the "positioning data No. 1".)

• Guide to buffer memory address
In the buffer memory address, "n" in "6001+1000n", etc. indicates a value corresponding to axis No. such as the following table.

Axis No.	n	Axis No.	n	Axis No.	n	Axis No.	n
1	0	5	4	9	8	13	12
2	1	6	5	10	9	14	13
3	2	7	6	11	10	15	14
4	3	8	7	12	11	16	15

(Note-1): Calculate as follows for the buffer memory address corresponding to each axis.
(Example) For axis No. 16
6001+1000n ([Da.10] M code/Condition data No./Number of LOOP to LEND repetitions)=6001+1000×15=21001

(Note-2): The range from axis No.1 to 2 (n=0 to 1) is valid in the QD77MS2.

(Note-3): The range from axis No.1 to 4 (n=0 to 3) is valid in the QD77MS4

Item		Setting value: Value set with GX Works2	Setting value: Value set with sequence program	Default value	Buffer memory address: QD77MS2 QD77MS4	Buffer memory address: QD77MS16
Positioning identifier	[Da.1] Operation pattern	00: Positioning complete	00	0000H	2000+6000n	6000+1000n
		01: Continuous positioning control	01			
		11: Continuous path control	11			
	[Da.2] Control method	01h : ABS Linear 1	01H			
		02h : INC Linear 1	02H			
		03h : Feed 1	03H			
		04h : FWD V1	04H			
		05h : RVS V1	05H			
		06h : FWD V/P	06H			
		07h : RVS V/P	07H			
		08h : FWD P/V	08H			
		09h : RVS P/V	09H			
		0Ah : ABS Linear 2	0AH			
		0Bh : INC Linear 2	0BH			
		0Ch : Feed 2	0CH			
		0Dh : ABS ArcMP	0DH			
		0Eh : INC ArcMP	0EH			
		0Fh : ABS ArcRGT	0FH			
		10h : ABS ArcLFT	10H			
		11h : INC ArcRGT	11H			
		12h : INC ArcLFT	12H			
		13h : FWD V2	13H			
		14h : RVS V2	14H			
		15h : ABS Linear 3	15H			
		16h : INC Linear 3	16H			
		17h : Feed 3	17H			
		18h : FWD V3	18H			
		19h : RVS V3	19H			
		1Ah : ABS Linear 4	1AH			
		1Bh : INC Linear 4	1BH			
		1Ch : Feed 4	1CH			
		1Dh : FWD V4	1DH			
		1Eh : RVS V4	1EH			
		80h : NOP	80H			
		81h : Address CHG	81H			
		82h : JUMP	82H			
		83h : LOOP	83H			
		84h : LEND	84H			
	[Da.3] Acceleration time No.	0: [Pr.9] Acceleration time 0	00			
		1: [Pr.25] Acceleration time 1	01			
		2: [Pr.26] Acceleration time 2	10			
		3: [Pr.27] Acceleration time 3	11			
	[Da.4] Deceleration time No.	0: [Pr.10] Deceleration time 0	00			
		1: [Pr.28] Deceleration time 1	01			
		2: [Pr.29] Deceleration time 2	10			
		3: [Pr.30] Deceleration time 3	11			
	[Da.5] Axis to be interpolated QD77MS2 QD77MS4	0: Axis 1	00			
		1: Axis 2	01			
		2: Axis 3	10			
		3: Axis 4	11			

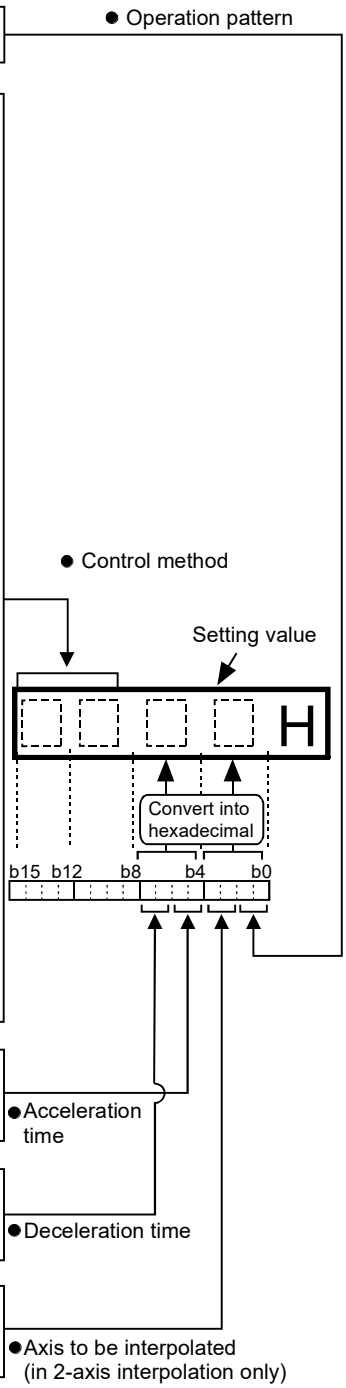

n: Axis No.-1

Item		Setting value, setting range		Default value	Buffer memory address	
		Value set with GX Works2	Value set with sequence program		QD77MS2 QD77MS4	QD77MS16
[Da.6] Positioning address/ movement amount		The setting value range differs according to the "[Da.2] Control method".		0	2006+6000n 2007+6000n	6006+1000n 6007+1000n
[Da.7] Arc address				0	2008+6000n 2009+6000n	6008+1000n 6009+1000n
[Da.8] Command speed		The setting value range differs depending on the "[Pr.1] Unit setting".		0	2004+6000n 2005+6000n	6004+1000n 6005+1000n
		-1: Current speed (Speed set for previous positioning data No.)	-1			
[Da.9] Dwell time/ JUMP destination positioning data No.	Dwell time	The setting value range differs according to the "[Da.2] Control method".		0	2002+6000n	6002+1000n
	JUMP destination positioning data No.					
[Da.10] M code/ Condition data No./Number of LOOP to LEND repetitions	M code			0	2001+6000n	6001+1000n
	Condition data No.					
	Number of LOOP to LEND repetitions					
Axis to be interpolated	[Da.20] Axis to be interpolated No.1 QD77MS16	0: Axis 1 selected 1: Axis 2 selected 2: Axis 3 selected 3: Axis 4 selected 4: Axis 5 selected 5: Axis 6 selected 6: Axis 7 selected 7: Axis 8 selected 8: Axis 9 selected 9: Axis 10 selected A: Axis 11 selected B: Axis 12 selected C: Axis 13 selected D: Axis 14 selected E: Axis 15 selected F: Axis 16 selected	0H 1H 2H 3H 4H 5H 6H 7H 8H 9H AH BH CH DH EH FH	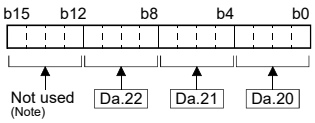 (Note): Always "0" is set to the part not used.	0000H		6003+1000n
	[Da.21] Axis to be interpolated No.2 QD77MS16					
	[Da.22] Axis to be interpolated No.3 QD77MS16					

n: Axis No.-1

[Da.1] Operation pattern

The operation pattern designates whether positioning of a certain data No. is to be ended with just that data, or whether the positioning for the next data No. is to be carried out in succession.

[Operation pattern]

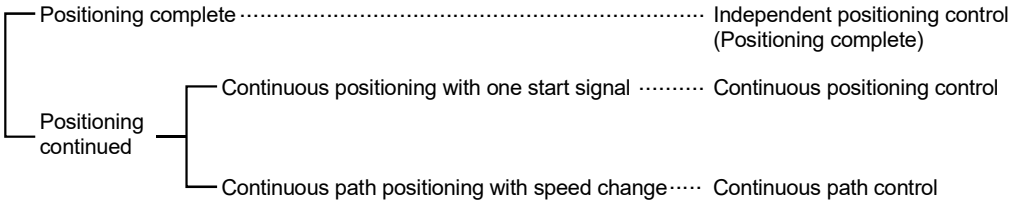

1) Positioning complete ..... Set to execute positioning to the designated address, and then complete positioning.
2) Continuous positioning control ..... Positioning is carried out successively in order of data Nos. with one start signal. The operation halts at each position indicated by a positioning data.
3) Continuous path control..... Positioning is carried out successively in order of data Nos. with one start signal. The operation does not stop at each positioning data.

[Da.2] Control method

Set the "control method" for carrying out positioning control.

Note)
- When "JUMP instruction" is set for the control method, the "[Da.9] Dwell time/JUMP destination positioning data No. " and "[Da.10] M code/Condition data No./Number of LOOP to LEND repetitions" setting details will differ.
- In case you selected "LOOP" as the control method, the "[Da.10] M code/Condition data No./Number of LOOP to LEND repetitions" should be set differently from other cases.
- Refer to Chapter 9 "Major Positioning Control" for details on the control methods.
- If "degree" is set for "[Pr.1] Unit setting", circular interpolation control cannot be carried out. (The error "Circular interpolation not possible" (error code: 535) will occur when executed.)

[Da.3] Acceleration time No.

Set which of "acceleration time 0 to 3" to use for the acceleration time during positioning.

0: Use the value set in "[Pr.9] Acceleration time 0".
1: Use the value set in "[Pr.25] Acceleration time 1".
2: Use the value set in "[Pr.26] Acceleration time 2".
3: Use the value set in "[Pr.27] Acceleration time 3".

[Da.4] Deceleration time No.

Set which of "deceleration time 0 to 3" to use for the deceleration time during positioning.

0: Use the value set in "[Pr.10] Deceleration time 0".

1: Use the value set in "[Pr.28] Deceleration time 1".

2: Use the value set in "[Pr.29] Deceleration time 2".

3: Use the value set in "[Pr.30] Deceleration time 3".

[Da.5] Axis to be interpolated QD77MS2 QD77MS4

Set the target axis (partner axis) for operations under the 2-axis interpolation control.

0: Selects the axis 1 as the target axis (partner axis).

1: Selects the axis 2 as the target axis (partner axis).

2: Selects the axis 3 as the target axis (partner axis).

3: Selects the axis 4 as the target axis (partner axis).

Note) • Do not specify the own axis number or any number except the above. (If you do, the "Illegal interpolation description command error" will occur during the program execution (error code: 521).)

• This item does not need to be set in case 3 or 4-axis interpolation is selected.

[Da.6] Positioning address/movement amount

Set the address to be used as the target value for positioning control.
The setting value range differs according to the "[Da.2] Control method".
((1) to (4))

(1) Absolute (ABS) system, current value changing

• The setting value (positioning address) for the ABS system and current value changing is set with an absolute address (address from HP).

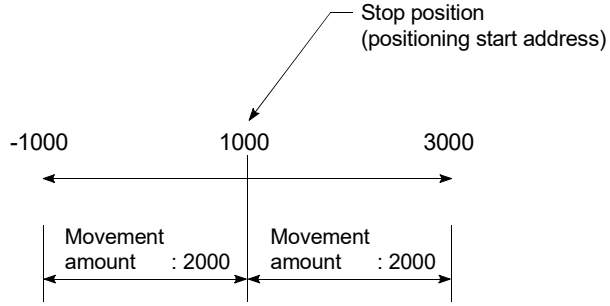

(2) Incremental (INC) system, fixed-feed 1, fixed-feed 2, fixed-feed 3, fixed-feed 4

- The setting value (movement amount) for the INC system is set as a movement amount with sign.
  When movement amount is positive: Moves in the positive direction (address increment direction)
  When movement amount is negative: Moves in the negative direction (address decrement direction)

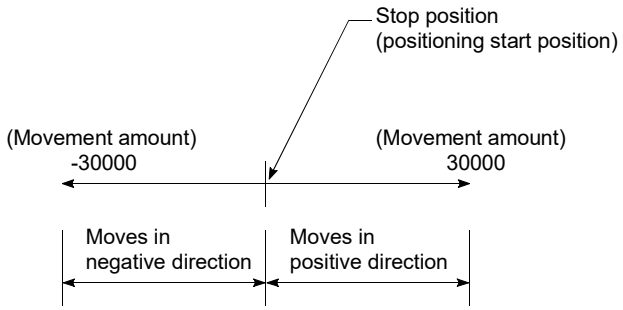

(3) Speed-position switching control

- INC mode:
  Set the amount of movement after the switching from speed control to position control.
- ABS mode:
  Set the absolute address which will be the target value after speed control is switched to position control. (The unit is "degree" only)

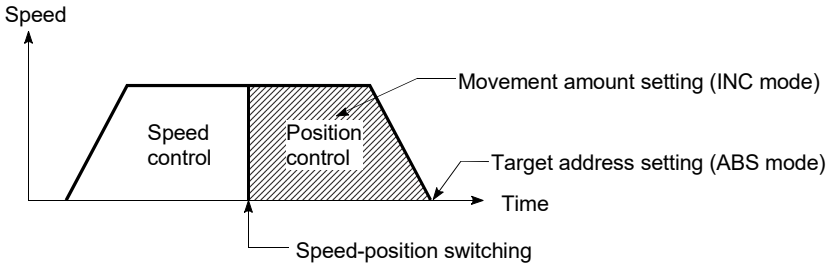

(4) Position-speed switching control

- Set the amount of movement before the switching from position control to speed control.

■ When "[Pr.1] Unit setting" is "mm"

The table below lists the control methods that require the setting of the positioning address or movement amount and the associated setting ranges.
(With any control method excluded from the table below, neither the positioning address nor the movement amount needs to be set.)

[Da.2] setting value	Value set with GX Works2 (μm)	Value set with sequence program ∗1 ($\times 10^{-1}$μm)
ABS Linear 1 : 01H ABS Linear 2 : 0AH ABS Linear 3 : 15H ABS Linear 4 : 1AH Current value changing : 81H	◊ Set the address -214748364.8 to 214748364.7	◊ Set the address -2147483648 to 2147483647
INC Linear 1 : 02H INC Linear 2 : 0BH INC Linear 3 : 16H INC Linear 4 : 1BH Fixed-feed 1 : 03H Fixed-feed 2 : 0CH Fixed-feed 3 : 17H Fixed-feed 4 : 1CH	◊ Set the movement amount -214748364.8 to 214748364.7	◊ Set the movement amount -2147483648 to 2147483647
Forward run speed/position : 06H Reverse run speed/position : 07H Forward run position/speed : 08H Reverse run position/speed : 09H	◊ Set the movement amount 0 to 214748364.7	◊ Set the movement amount 0 to 2147483647
ABS circular sub : 0DH ABS circular right : 0FH ABS circular left : 10H	◊ Set the address -214748364.8 to 214748364.7	◊ Set the address -2147483648 to 2147483647
INC circular sub : 0EH INC circular right : 11H INC circular left : 12H	◊ Set the movement amount -214748364.8 to 214748364.7	◊ Set the movement amount -2147483648 to 2147483647

∗1: Set an integer because the sequence program cannot handle fractions.
(The value will be converted properly within the system.)

■ When "[Pr.1] Unit setting" is "degree"
The table below lists the control methods that require the setting of the positioning address or movement amount and the associated setting ranges.
(With any control method excluded from the table below, neither the positioning address nor the movement amount needs to be set.)

[Da.2] setting value	Value set with GX Works2 (degree)	Value set with sequence program ∗1 (×10^{-5} degree)
ABS Linear 1 : 01H ABS Linear 2 : 0AH ABS Linear 3 : 15H ABS Linear 4 : 1AH Current value changing : 81H	◊ Set the address 0 to 359.99999	◊ Set the address 0 to 35999999
INC Linear 1 : 02H INC Linear 2 : 0BH INC Linear 3 : 16H INC Linear 4 : 1BH Fixed-feed 1 : 03H Fixed-feed 2 : 0CH Fixed-feed 3 : 17H Fixed-feed 4 : 1CH	◊ Set the movement amount -21474.83648 to 21474.83647	◊ Set the movement amount -2147483648 to 2147483647 ∗2
Forward run speed/position : 06H Reverse run speed/position : 07H	In INC mode ◊ Set the movement amount 0 to 21474.83647 In ABS mode ◊ Set the address 0 to 359.99999	In INC mode ◊ Set the movement amount 0 to 2147483647 In ABS mode ◊ Set the address 0 to 35999999
Forward run position/speed : 08H Reverse run position/speed : 09H	◊ Set the movement amount 0 to 21474.83647	◊ Set the movement amount 0 to 2147483647

∗1: Set an integer because the sequence program cannot handle fractions.
(The value will be converted properly within the system.)

∗2: When the software stroke limit is valid, -35999999 to 35999999 is set.

■ When "[Pr.1] Unit setting" is "PLS"
The table below lists the control methods that require the setting of the positioning address or movement amount and the associated setting ranges.
(With any control method excluded from the table below, neither the positioning address nor the movement amount needs to be set.)

[Da.2] setting value	Value set with GX Works2 (PLS)	Value set with sequence program ∗1 (PLS)
ABS Linear 1 : 01H ABS Linear 2 : 0AH ABS Linear 3 : 15H ABS Linear 4 : 1AH Current value changing : 81H	◊ Set the address -2147483648 to 2147483647	◊ Set the address -2147483648 to 2147483647
INC Linear 1 : 02H INC Linear 2 : 0BH INC Linear 3 : 16H INC Linear 4 : 1BH Fixed-feed 1 : 03H Fixed-feed 2 : 0CH Fixed-feed 3 : 17H Fixed-feed 4 : 1CH	◊ Set the movement amount -2147483648 to 2147483647	◊ Set the movement amount -2147483648 to 2147483647
Forward run speed/position : 06H Reverse run speed/position : 07H Forward run position/speed : 08H Reverse run position/speed : 09H	◊ Set the movement amount 0 to 2147483647	◊ Set the movement amount 0 to 2147483647
ABS circular sub : 0DH ABS circular right : 0FH ABS circular left : 10H	◊ Set the address -2147483648 to 2147483647	◊ Set the address -2147483648 to 2147483647
INC circular sub : 0EH INC circular right : 11H INC circular left : 12H	◊ Set the movement amount -2147483648 to 2147483647	◊ Set the movement amount -2147483648 to 2147483647

■ When "[Pr.1] Unit setting" is "inch"

The table below lists the control methods that require the setting of the positioning address or movement amount and the associated setting ranges.
(With any control method excluded from the table below, neither the positioning address nor the movement amount needs to be set.)

[Da.2] setting value	Value set with GX Works2 (inch)	Value set with sequence program ∗1 (× 10^{-5} inch)
ABS Linear 1 : 01H ABS Linear 2 : 0AH ABS Linear 3 : 15H ABS Linear 4 : 1AH Current value changing : 81H	◊ Set the address -21474.83648 to 21474.83647	◊ Set the address -2147483648 to 2147483647
INC Linear 1 : 02H INC Linear 2 : 0BH INC Linear 3 : 16H INC Linear 4 : 1BH Fixed-feed 1 : 03H Fixed-feed 2 : 0CH Fixed-feed 3 : 17H Fixed-feed 4 : 1CH	◊ Set the movement amount -21474.83648 to 21474.83647	◊ Set the movement amount -2147483648 to 2147483647
Forward run speed/position : 06H Reverse run speed/position : 07H Forward run position/speed : 08H Reverse run position/speed : 09H	◊ Set the movement amount 0 to 21474.83647	◊ Set the movement amount 0 to 2147483647
ABS circular sub : 0DH ABS circular right : 0FH ABS circular left : 10H	◊ Set the address -21474.83648 to 21474.83647	◊ Set the address -2147483648 to 2147483647
INC circular sub : 0EH INC circular right : 11H INC circular left : 12H	◊ Set the movement amount -21474.83648 to 21474.83647	◊ Set the movement amount -2147483648 to 2147483647

∗1: Set an integer because the sequence program cannot handle fractions.
(The value will be converted properly within the system.)

[Da.7] Arc address

The arc address is data required only when carrying out circular interpolation control.

(1) When carrying out circular interpolation with sub point designation, set the sub point (passing point) address as the arc address.

(2) When carrying out circular interpolation with center point designation, set the center point address of the arc as the arc address.

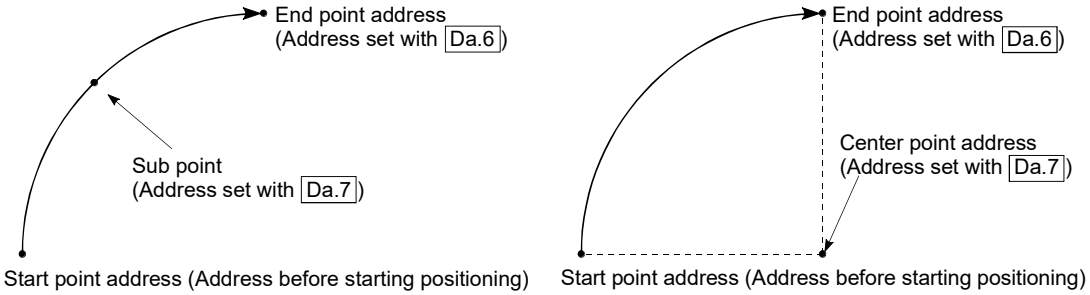

<(1) Circular interpolation with sub point designation>

<(2) Circular interpolation with center point designation>

When not carrying out circular interpolation control, the value set in "[Da.7] Arc address" will be invalid.

■ When "[Pr.1] Unit setting" is "mm"
The table below lists the control methods that require the setting of the arc address and shows the setting range.
(With any control method excluded from the table below, the arc address does not need to be set.)

[Da.2] setting value	Value set with GX Works2 (μm)	Value set with sequence program ∗1 ($\times 10^{-1}$μm)
ABS circular sub : 0DH ABS circular right : 0FH ABS circular left : 10H	◊ Set the address -214748364.8 to 214748364.7 ∗2	◊ Set the address -2147483648 to 2147483647
INC circular sub : 0EH INC circular right : 11H INC circular left : 12H	◊ Set the movement amount -214748364.8 to 214748364.7 ∗2	◊ Set the movement amount -2147483648 to 2147483647 ∗2

∗1: Set an integer because the sequence program cannot handle fractions.
(The value will be converted properly within the system.)

∗2: Note that the maximum radius that circular interpolation control is possible is 536870912 ($\times 10^{-1}$μm), although the setting value can be input within the range shown in the above table, as an arc address.

■ When "[Pr.1] Unit setting" is "degree"
No control method requires the setting of the arc address by "degree".

■ When "[Pr.1] Unit setting" is "PLS"
The table below lists the control methods that require the setting of the arc address and shows the setting range.
(With any control method excluded from the table below, the arc address does not need to be set.)

[Da.2] setting value	Value set with GX Works2 (PLS)	Value set with sequence program (PLS)
ABS circular sub : 0DH ABS circular right : 0FH ABS circular left : 10H	◊ Set the address -2147483648 to 2147483647 ∗1	◊ Set the address -2147483648 to 2147483647
INC circular sub : 0EH INC circular right : 11H INC circular left : 12H	◊ Set the movement amount -2147483648 to 2147483647 ∗1	◊ Set the movement amount -2147483648 to 2147483647 ∗1

∗1: Note that the maximum radius that circular interpolation control is possible is 536870912 (PLS), although the setting value can be input within the range shown in the above table, as an arc address.

■ When "[Pr.1] Unit setting" is "inch"
The table below lists the control methods that require the setting of the arc address and shows the setting range.
(With any control method excluded from the table below, the arc address does not need to be set.)

[Da.2] setting value	Value set with GX Works2 (inch)	Value set with sequence program ∗1 (×10^{-5} inch)
ABS circular sub : 0DH ABS circular right : 0FH ABS circular left : 10H	◊ Set the address -21474.83648 to 21474.83647 ∗2	◊ Set the address -2147483648 to 2147483647
INC circular sub : 0EH INC circular right : 11H INC circular left : 12H	◊ Set the movement amount -21474.83648 to 21474.83647 ∗2	◊ Set the movement amount -2147483648 to 2147483647 ∗2

∗1: Set an integer because the sequence program cannot handle fractions.
(The value will be converted properly within the system.)

∗2: Note that the maximum radius that circular interpolation control is possible is 536870912 (×10^{-5} inch), although the setting value can be input within the range shown in the above table, as an arc address.

[Da.8] Command speed

Set the command speed for positioning.

(1) If the set command speed exceeds "[Pr.8] Speed limit value", positioning will be carried out at the speed limit value.

(2) If "-1" is set for the command speed, the current speed (speed set for previous positioning data No.) will be used for positioning control. Use the current speed for uniform speed control, etc. If "-1" is set for continuing positioning data, and the speed is changed, the following speed will also change.

(Note that when starting positioning, if the "-1" speed is set for the positioning data that carries out positioning control first, the error "No Command speed" (error code: 503) will occur, and the positioning will not start.
Refer to Section 16.4 "List of errors" for details on the errors.)

[Pr.1] setting value	Value set with GX Works2 (unit)	Value set with sequence program (unit)
0 : mm	0.01 to 20000000.00 (mm/min)	1 to 2000000000 (×10^{-2}mm/min)
1 : inch	0.001 to 2000000.000 (inch/min)	1 to 2000000000 (×10^{-3}inch/min)
2 : degree	0.001 to 2000000.000 (degree/min) ∗1	1 to 2000000000 (×10^{-3}degree/min) ∗2
3 : PLS	1 to 1000000000 (PLS/s)	1 to 1000000000 (PLS/s)

∗1: The range of command speed when "[Pr.83] Speed control 10 x multiplier setting for degree axis" is valid: 0.01 to 20000000.00 (degree/min)

∗2: The range of command speed when "[Pr.83] Speed control 10 x multiplier setting for degree axis" is valid: 1 to 2000000000 (×10^{-2}degree/min)

[Da.9] Dwell time/JUMP designation positioning data No.

Set the "dwell time" or "positioning data No." corresponding to the "[Da.2] Control method".

- When a method other than "JUMP instruction" is set for "[Da.2] Control method" ..... Set the "dwell time".
- When "JUMP instruction" is set for "[Da.2] Control method" ..... Set the "positioning data No." for the JUMP destination.

When the "dwell time" is set, the setting details of the "dwell time" will be as follows according to "[Da.1] Operation pattern".

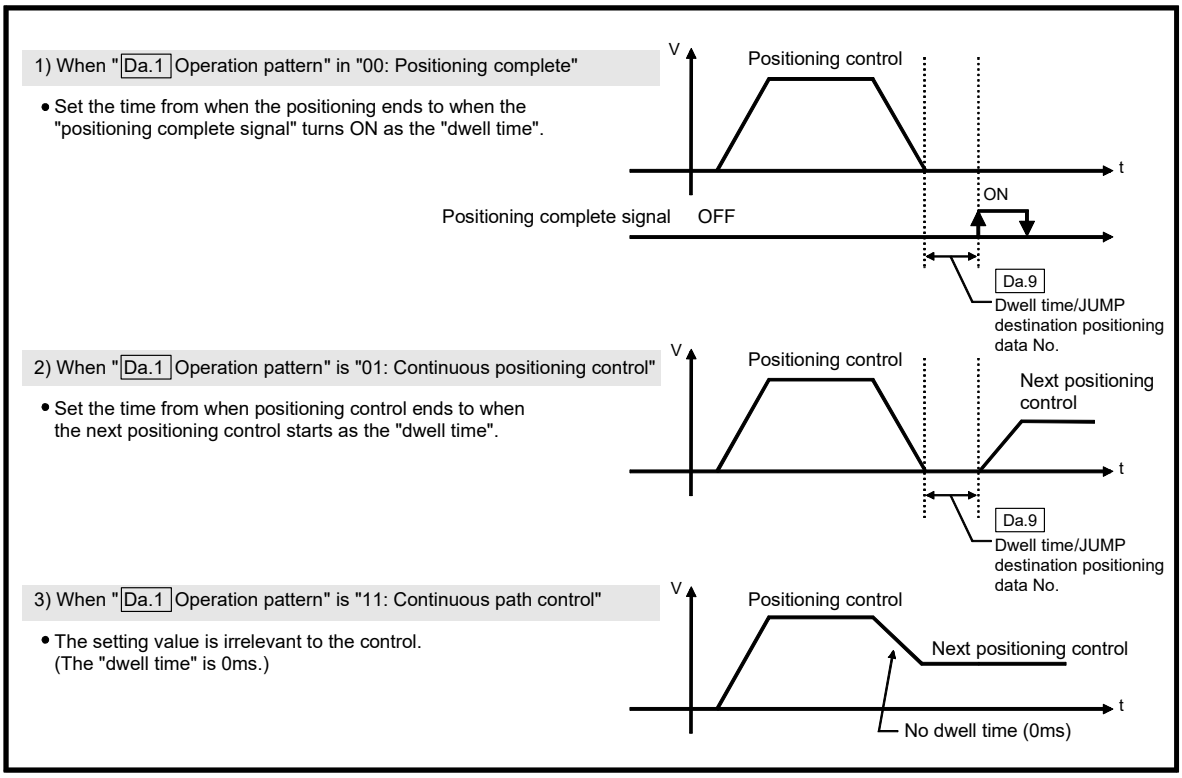

[Da.2] setting value	Setting item	Value set with GX Works2	Value set with sequence program
JUMP instruction: 82H	Positioning data No.	1 to 600	1 to 600
Other than JUMP instruction	Dwell time	0 to 65535 (ms)	0 to 65535 (ms)

[Da.10] M code/Condition data No./Number of LOOP to LEND repetitions

Set an "M code", a "condition data No.", or the "Number of LOOP to LEND repetitions" depending on how the "[Da.2] Control method" is set. *1

- If a method other than "JUMP instruction" and "LOOP" is selected as the "[Da.2] Control method"
  ..... Set an "M code".
  If no "M code" needs to be output, set "0" (default value).
- If "JUMP instruction" or "LOOP" is selected as the "[Da.2] Control method"
  ..... Set the "condition data No." for JUMP.
  0 : Unconditional JUMP to the positioning data specified by [Da.9].
  1 to 10 : JUMP performed according to the condition data No. specified (a number between 1 and 10).
  Make sure that you specify the number of LOOP to LEND repetitions by a number other than "0". The error "Control method LOOP setting error" (error code: 545) will occur if you specify "0".

*1: The condition data specifies the condition for the JUMP instruction to be executed.
(A JUMP will take place when the condition is satisfied.)

[Da.2] setting value	Setting item	Value set with GX Works2	Value set with sequence program
JUMP instruction: 82H	Condition data No.	0 to 10	0 to 10
Other than JUMP instruction	M code	0 to 65535	0 to 65535
LOOP: 83H	Repetition count	1 to 65535	1 to 65535

[Da.20] Axis to be interpolated No.1 to [Da.22] Axis to be interpolated No.3

QD77MS16

Set the axis to be interpolated to execute the 2 to 4-axis interpolation operation.

- 2-axis interpolation..... Set the target axis number in "[Da.20] Axis to be interpolated No.1".
- 3-axis interpolation..... Set the target axis number in "[Da.20] Axis to be interpolated No.1" and "[Da.21] Axis to be interpolated No.2".
- 4-axis interpolation..... Set the target axis number in "[Da.20] Axis to be interpolated No.1" to "[Da.22] Axis to be interpolated No.3".

Set the axis set as axis to be interpolated.

0: Axis 1	8: Axis 9
1: Axis 2	9: Axis 10
2: Axis 3	A: Axis 11
3: Axis 4	B: Axis 12
4: Axis 5	C: Axis 13
5: Axis 6	D: Axis 14
6: Axis 7	E: Axis 15
7: Axis 8	F: Axis 16

Note)
- Do not specify the own axis number. (If you do, the error "Illegal interpolation description command" (error code: 521) will occur during the program execution.)
- When the same axis number or axis number of own axis is set to multiple axis to be interpolated number, the error "Illegal interpolation description command" (error code: 521) will occur during the program execution.
- Do not specify the axis to be interpolated No.2 and axis to be interpolated No.3 for 2-axis interpolation, and do not specify the axis to be interpolated No.3 for 3-axis interpolation.
  The setting value is ignored.

5.4 List of block start data

The illustrations below show the organization of the block start data stored in the buffer memory of Simple Motion module. The block start data setting items [Da.11] to [Da.14] are explained in the pages that follow.

• QD77MS2/QD77MS4

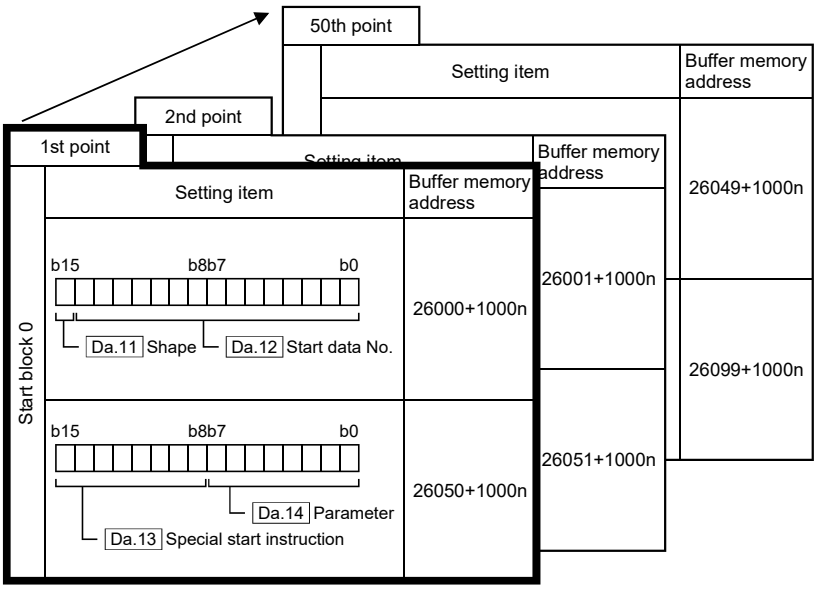

n: Axis No.-1

- Up to 50 block start data points can be set (stored) for each axis in the buffer memory addresses shown on the left.
- Items in a single unit of block start data are shown included in a bold frame.
- Each axis has five start blocks (block Nos. 0 to 4).

(Note): For information on the organization of the buffer memory addresses assigned to the start blocks 1 to 4, refer to Appendix 1 "List of buffer memory addresses".

• QD77MS16

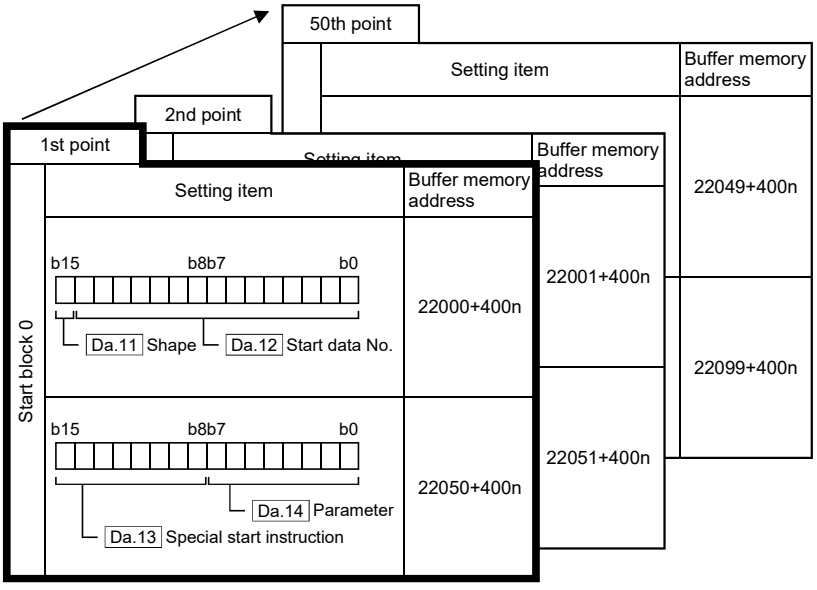

n: Axis No.-1

- Up to 50 block start data points can be set (stored) for each axis in the buffer memory addresses shown on the left.
- Items in a single unit of block start data are shown included in a bold frame.
- Each axis has five start blocks (block Nos. 0 to 4).
  Start block 2 to 4 are not allocated to buffer memory.
  Set with GX Works2.

(Note): For information on the organization of the buffer memory addresses assigned to the start block 1, refer to Appendix 1 "List of buffer memory addresses".

The following pages explain the block start data setting items [Da.11] to [Da.14].
(The buffer memory addresses shown are those of the "1st point block start data (block No. 7000)".)

• Guide to buffer memory address
In the buffer memory address, "n" in "22000+400n", etc. indicates a value corresponding to axis No. such as the following table.

Axis No.	n	Axis No.	n	Axis No.	n	Axis No.	n
1	0	5	4	9	8	13	12
2	1	6	5	10	9	14	13
3	2	7	6	11	10	15	14
4	3	8	7	12	11	16	15

(Note-1): Calculate as follows for the buffer memory address corresponding to each axis.
(Example) For axis No. 16
22000+400n ([Da.11] Shape)=22000+400×15=28000
(Note-2): The range from axis No.1 to 2 (n=0 to 1) is valid in the QD77MS2.
(Note-3): The range from axis No.1 to 4 (n=0 to 3) is valid in the QD77MS4.

REMARK

To perform a high-level positioning control using block start data, set a number between 7000 and 7004 to the "[Cd.3] Positioning start No." and use the "[Cd.4] Positioning starting point No." to specify a point number between 1 and 50, a position counted from the beginning of the block.
The number between 7000 and 7004 specified here is called the "block No.".
With the Simple Motion module, up to 50 "block start data" points and up to 10 "condition data" items can be assigned to each "block No.".

Block No. *1	Axis	Block start data	Condition	Buffer memory	GX Works2
7000	Axis 1	Start block 0	Condition data (1 to 10)	Supports the settings	Supports the settings
	to		to		
	Maximum control axis No.		Condition data (1 to 10)		
7001	Axis 1	Start block 1	Condition data (1 to 10)		
	to		to		
	Maximum control axis No.		Condition data (1 to 10)		
7002	Axis 1	Start block 2	Condition data (1 to 10)	Supports the settings QD77MS2 QD77MS4 – QD77MS16	
	to		to		
	Maximum control axis No.		Condition data (1 to 10)		
7003	Axis 1	Start block 3	Condition data (1 to 10)		
	to		to		
	Maximum control axis No.		Condition data (1 to 10)		
7004	Axis 1	Start block 4	Condition data (1 to 10)		
	to		to		
	Maximum control axis No.		Condition data (1 to 10)		

*1: Setting cannot be made when the "Pre-reading start function" is used. If you set any of Nos. 7000 to 7004 and perform the Pre-reading start function, the error "Outside start No. range" (error code: 543) will occur.
(For details, refer to Section 13.7.7 "Pre-reading start function".)

Item	Setting value		Default value	Buffer memory address	
	Value set with GX Works2	Value set with sequence program		QD77MS2 QD77MS4	QD77MS16
[Da.11] Shape	0 : End	0	0000H	26000+1000n	22000+400n
	1 : Continue	1			
[Da.12] Start data No.	Positioning data No.: 1 to 600 (01H to 258H)	01H to 258H			
[Da.13] Special start instruction	0 : Block start (normal start)	00H	0000H	26050+1000n	22050+400n
	1 : Condition start	01H			
	2 : Wait start	02H			
	3 : Simultaneous start	03H			
	4 : FOR loop	04H			
	5 : FOR condition	05H			
	6 : NEXT start	06H			
[Da.14] Parameter	Condition data No.: 1 to 10 (01H to 0AH) Number of repetitions: 0 to 255 (00H to FFH)	00H to FFH			

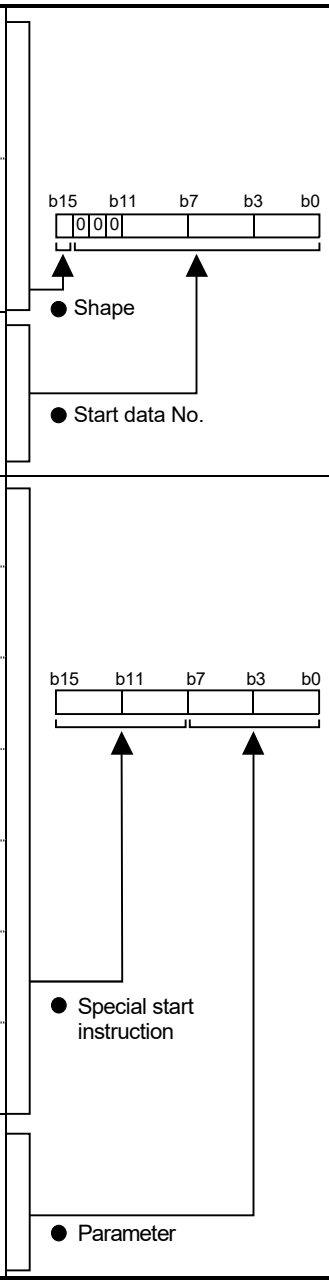

n: Axis No.-1

[Da.11] Shape

Set whether to carry out only the local "block start data" and then end control, or to execute the "block start data" set in the next point.

Setting value	Setting details
0 : End	Execute the designated point's "block start data", and then complete the control.
1 : Continue	Execute the designated point's "block start data", and after completing control, execute the next point's "block start data".

[Da.12] Start data No.

Set the "positioning data No." designated with the "block start data".

[Da.13] Special start instruction

Set the "special start instruction" for using "high-level positioning control". (Set how to start the positioning data set in "[Da.12] Start data No.".)

Setting value	Setting details
00H: Block start (Normal start)	Execute the random block positioning data in the set order with one start.
01H: Condition start	Carry out the condition judgment set in "condition data" for the designated positioning data, and when the conditions are established, execute the "block start data". If not established, ignore that "block start data", and then execute the next point's "block start data".
02H: Wait start	Carry out the condition judgment set in "condition data" for the designated positioning data, and when the conditions are established, execute the "block start data". If not established, stop the control (wait) until the conditions are established.
03H: Simultaneous start	Simultaneous execute (output command at same timing) the positioning data with the No. designated for the axis designated in the "condition data". Up to four axes can start simultaneously.
04H: Repeated start (FOR loop)	Repeat the program from the block start data with the "FOR loop" to the block start data with "NEXT" for the designated number of times.
05H: Repeated start (FOR condition)	Repeat the program from the block start data with the "FOR condition" to the block start data with "NEXT" until the conditions set in the "condition data" are established.
06H: NEXT start	Set the end of the repetition when "04H: Repetition start (FOR loop)" or "05H: Repetition start (FOR condition)" is set.

Refer to Chapter 10 "High-Level Positioning Control" for details on the control.

[Da.14] Parameter

Set the value as required for "[Da.13] Special start instruction".

[Da.13] Special start instruction	Setting value	Setting details
Block start (Normal start)	–	Not used. (There is no need to set.)
Condition start	1 to 10	Set the condition data No. (Data No. of "condition data" is set up for the condition judgment.)
Wait start		
Simultaneous start		
Repeated start (FOR loop)	0 to 255	Set the number of repetitions.
Repeated start (FOR condition)	1 to 10	Set the condition data No. (Data No. of "condition data" is set up for the condition judgment.)

5.5 List of condition data

The illustrations below show the organization of the condition data stored in the buffer memory of Simple Motion module. The condition data setting items [Da.15] to [Da.19] and [Da.23] to [Da.26] are explained in the pages that follow.

• QD77MS2/QD77MS4

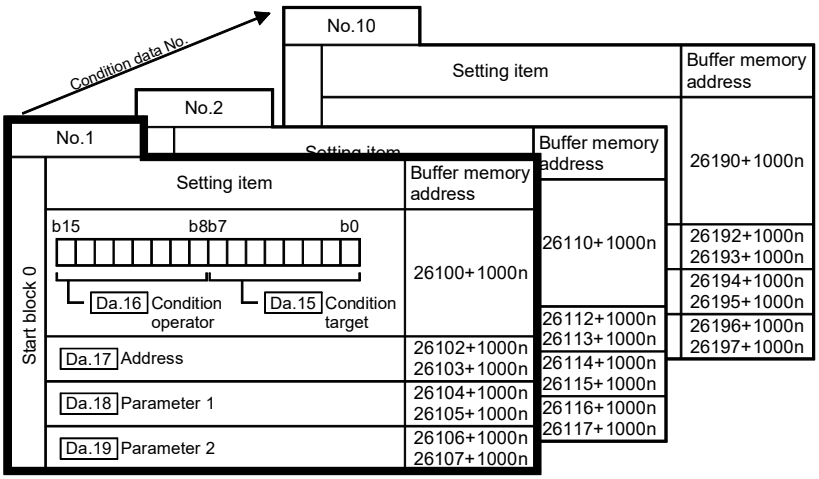

n: Axis No.-1

- Up to 10 condition data points can be set (stored) for each block No. in the buffer memory addresses shown on the left.
- Items in a single unit of condition data are shown included in a bold frame.
- Each axis has five start blocks (block Nos. 0 to 4).

(Note): For information on the organization of the buffer memory addresses assigned to the start blocks 1 to 4, refer to Appendix 1 "List of buffer memory addresses".

• QD77MS16

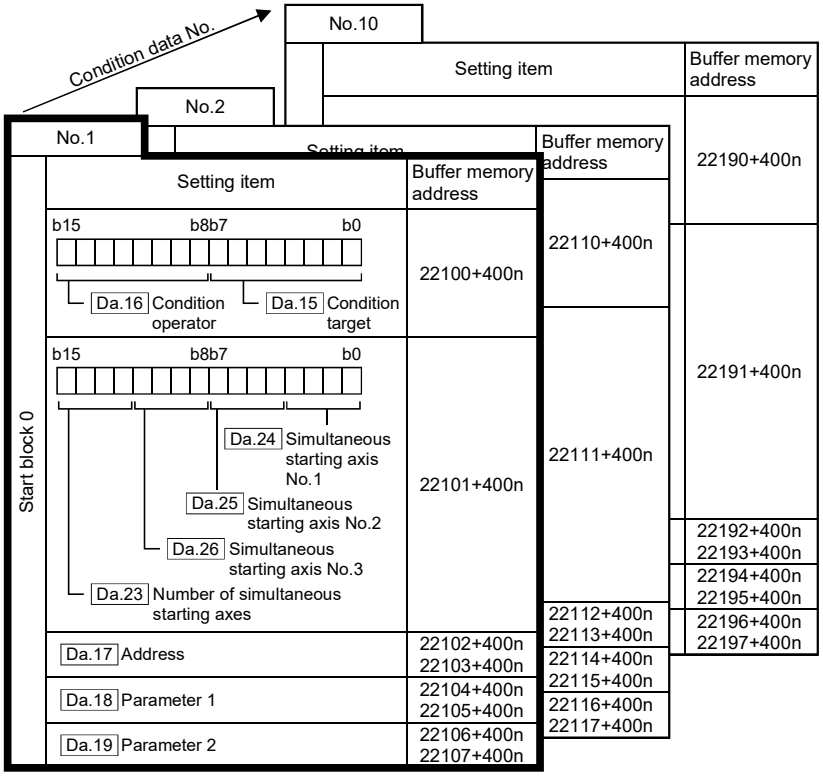

n: Axis No.-1

- Up to 10 condition data points can be set (stored) for each block No. in the buffer memory addresses shown on the left.
- Items in a single unit of condition data are shown included in a bold frame.
- Each axis has five start blocks (block Nos. 0 to 4).
  Start block 2 to 4 are not allocated to buffer memory.
  Set with GX Works2.

(Note): For information on the organization of the buffer memory addresses assigned to the start block 1, refer to Appendix 1 "List of buffer memory addresses".

The following pages explain the condition data setting items [Da.15] to [Da.19] and [Da.23] to [Da.26].
(The buffer memory addresses shown are those of the "condition data No. 1 (block No. 7000)".)

• Guide to buffer memory address
In the buffer memory address, "n" in "22100+400n", etc. indicates a value corresponding to axis No. such as the following table.

Axis No.	n	Axis No.	n	Axis No.	n	Axis No.	n
1	0	5	4	9	8	13	12
2	1	6	5	10	9	14	13
3	2	7	6	11	10	15	14
4	3	8	7	12	11	16	15

(Note-1): Calculate as follows for the buffer memory address corresponding to each axis.
(Example) For axis No. 16
22100+400n ([Da.16] Condition operator)=22100+400×15=28100
(Note-2): The range from axis No.1 to 2 (n=0 to 1) is valid in the QD77MS2.
(Note-3): The range from axis No.1 to 4 (n=0 to 3) is valid in the QD77MS4.

REMARK

To perform a high-level positioning control using block start data, set a number between 7000 and 7004 to the "[Cd.3] Positioning start No." and use the "[Cd.4] Positioning starting point No." to specify a point number between 1 and 50, a position counted from the beginning of the block.
The number between 7000 and 7004 specified here is called the "block No.".
With the Simple Motion module, up to 50 "block start data" points and up to 10 "condition data" items can be assigned to each "block No.".

Block No. *1	Axis	Block start data	Condition	Buffer memory	GX Works2
7000	Axis 1	Start block 0	Condition data (1 to 10)	Supports the settings	Supports the settings
	to		to		
	Maximum control axis No.		Condition data (1 to 10)		
7001	Axis 1	Start block 1	Condition data (1 to 10)		
	to		to		
	Maximum control axis No.		Condition data (1 to 10)		
7002	Axis 1	Start block 2	Condition data (1 to 10)	Supports the settings QD77MS2 QD77MS4 – QD77MS16	
	to		to		
	Maximum control axis No.		Condition data (1 to 10)		
7003	Axis 1	Start block 3	Condition data (1 to 10)		
	to		to		
	Maximum control axis No.		Condition data (1 to 10)		
7004	Axis 1	Start block 4	Condition data (1 to 10)		
	to		to		
	Maximum control axis No.		Condition data (1 to 10)		

*1: Setting cannot be made when the "Pre-reading start function" is used. If you set any of Nos. 7000 to 7004 and perform the Pre-reading start function, the error "Outside start No. range" (error code: 543) will occur.
(For details, refer to Section 13.7.7 "Pre-reading start function".)

Item		Setting value: Value set with GX Works2		Setting value: Value set with sequence program	Default value	Buffer memory address: QD77MS2 QD77MS4	Buffer memory address: QD77MS16
Condition identifier	[Da.15] Condition target	01 : Device X		01H	0000H	26100+1000n	22100+400n
		02 : Device Y		02H			
		03 : Buffer memory (1-word)		03H			
		04 : Buffer memory (2-word)		04H			
		05 : Positioning data No.		05H			
	[Da.16] Condition operator	01 : ＊＊=P1		01H			
		02 : ＊＊≠P1		02H			
		03 : ＊＊≤P1		03H			
		04 : ＊＊≥P1		04H			
		05 : P1≤＊＊≤ P2		05H			
		06 : ＊＊≤P1, P2≤＊＊		06H			
		07 : DEV=ON		07H			
		08 : DEV=OFF		08H			
		10 : Axis 1 selected	QD77MS2 QD77MS4	10H			
		20 : Axis 2 selected		20H			
		30 : Axis 1 and 2 selected		30H			
		40 : Axis 3 selected		40H			
		50 : Axis 1 and 3 selected		50H			
		60 : Axis 2 and 3 selected		60H			
		70 : Axis 1, 2, and 3 selected		70H			
		80 : Axis 4 selected		80H			
		90 : Axis 1 and 4 selected		90H			
		A0 : Axis 2 and 4 selected		A0H			
		B0 : Axis 1, 2, and 4 selected		B0H			
		C0 : Axis 3 and 4 selected		C0H			
		D0 : Axis 1, 3, and 4 selected		D0H			
		E0 : Axis 2, 3, and 4 selected		E0H			
[Da.17] Address		Buffer memory address		Example) 26103 / 26102, b31 (High-order) b16 b15 (Low-order) b0, Buffer memory address	0000H	26102+1000n 26103+1000n	22102+400n 22103+400n
[Da.18] Parameter 1		Value		Example) 26105 / 26104, b31 (High-order) b16 b15 (Low-order) b0, Value	0000H	26104+1000n 26105+1000n	22104+400n 22105+400n
[Da.19] Parameter 2		Value		Example) 26107 / 26106, b31 (High-order) b16 b15 (Low-order) b0, Value	0000H	26106+1000n 26107+1000n	22106+400n 22107+400n

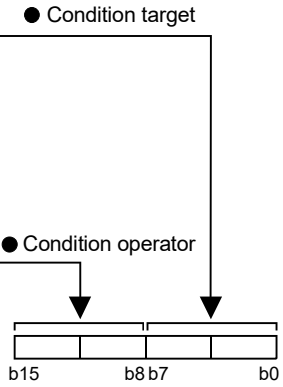

n: Axis No.-1

Item		Setting value			Default value	Buffer memory address	
		Value set with GX Works2	Value set with sequence program			QD77MS2 QD77MS4	QD77MS16
Simultaneous starting axis	[Da.23] Number of simultaneous starting axes QD77MS16	2: 2 axes	2H		0000H		22101+400n
		3: 3 axes	3H				
		4: 4 axes	4H				
	[Da.24] Simultaneous starting axis No.1 QD77MS16	0: Axis 1 selected	0H	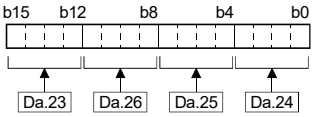			
		1: Axis 2 selected	1H				
		2: Axis 3 selected	2H				
		3: Axis 4 selected	3H				
	[Da.25] Simultaneous starting axis No.2 QD77MS16	4: Axis 5 selected	4H				
		5: Axis 6 selected	5H				
		6: Axis 7 selected	6H				
		7: Axis 8 selected	7H				
	[Da.26] Simultaneous starting axis No.3 QD77MS16	8: Axis 9 selected	8H				
		9: Axis 10 selected	9H				
		A: Axis 11 selected	AH				
		B: Axis 12 selected	BH				
		C: Axis 13 selected	CH				
		D: Axis 14 selected	DH				
		E: Axis 15 selected	EH				
		F: Axis 16 selected	FH				

n: Axis No.-1

[Da.15] Condition target

Set the condition target as required for each control.

Setting value	Setting details
01H : Device X	Set the input/output signal ON/OFF as the conditions.
02H : Device Y	
03H : Buffer memory (1-word)	Set the value stored in the buffer memory as the condition.
04H : Buffer memory (2-word)	03H: The target buffer memory is "1-word (16 bits)" 04H: The target buffer memory is "2-word (32 bits)"
05H : Positioning data No.	Select only for "simultaneous start".

[Da.16] Condition operator

Set the condition operator as required for the "[Da.15] Condition target".

[Da.15] Condition target	Setting value	Setting details
01H: Device X 02H: Device Y	07H : DEV=ON	The state (ON/OFF) of an I/O signal is defined as the condition. Select ON or OFF as the trigger.
	08H : DEV=OFF	
03H: Buffer memory (1-word) 04H: Buffer memory (2-word)	01H : ∗∗=P1	Select how to use the value (∗∗) in the buffer memory as a part of the condition.
	02H : ∗∗≠P1	
	03H : ∗∗≤P1	
	04H : ∗∗≥P1	
	05H : P1≤∗∗≤P2	
	06H : ∗∗≤P1, P2≤∗∗	
05H: Positioning data No.	10H : Axis 1 selected	If "simultaneous start" is specified, select the axis (or axes) that should start simultaneously. QD77MS2 QD77MS4
	20H : Axis 2 selected	
	30H : Axis 1 and 2 selected	
	40H : Axis 3 selected	
	50H : Axis 1 and 3 selected	
	60H : Axis 2 and 3 selected	
	70H : Axis 1, 2, and 3 selected	
	80H : Axis 4 selected	
	90H : Axis 1 and 4 selected	
	A0H : Axis 2 and 4 selected	
	B0H : Axis 1, 2, and 4 selected	
	C0H : Axis 3 and 4 selected	
	D0H : Axis 1, 3, and 4 selected	
	E0H : Axis 2, 3, and 4 selected	

[Da.17] Address

Set the address as required for the "[Da.15] Condition target".

[Da.15] Condition target	Setting value	Setting details
01H : Device X	–	Not used. (There is no need to set.)
02H : Device Y		
03H : Buffer memory (1-word)	Value (Buffer memory address) *1	Set the target "buffer memory address". (For 2 words, set the low-order buffer memory address.)
04H : Buffer memory (2-word)		
05H : Positioning data No.	–	Not used. (There is no need to set.)

(Note-1): The buffer memory address setting range when the buffer memory is specified is as follows.

[Da.15] Condition target	Buffer memory address range
03H: Buffer memory (1-word)	0 to 32767
04H: Buffer memory (2-word)	0 to 32766

[Da.18] Parameter 1

• QD77MS2/QD77MS4

Set the parameters as required for the "[Da.16] Condition operator".

[Da.16] Condition operator	Setting value	Setting details
01H : ∗∗=P1	Value	The value of P1 should be equal to or smaller than the value of P2. (P1≤P2) If P1 is greater than P2 (P1>P2), the error "Condition data error" (error code: 533) will occur.
02H : ∗∗≠P1		
03H : ∗∗≤P1		
04H : ∗∗≥P1		
05H : P1≤∗∗≤P2		
06H : ∗∗≤P1, P2≤∗∗		
07H : DEV=ON	Value (bit No.)	Set the device bit No. X: 0H, 1H, 4H to 17H Y: 0H, 1H, 4H to 17H
08H : DEV=OFF		
10H : Axis 1 selected	Value (positioning data No.)	Set the positioning data No. for starting axis 1 and/or axis 2. Low-order 16-bit : Axis 1 positioning data No. 1 to 600 (01H to 258H) High-order 16-bit : Axis 2 positioning data No. 1 to 600 (01H to 258H)
↓		
E0H : Axis 2, 3, and 4 selected		

• QD77MS16

Set the parameters as required for the "[Da.16] Condition operator" and "[Da.23] Number of simultaneous starting axes".

[Da.16] Condition operator	[Da.23] Number of simultaneous starting axes	Setting value	Setting details
01H : ∗∗=P1		Value	The value of P1 should be equal to or smaller than the value of P2. (P1≤P2) If P1 is greater than P2 (P1>P2), the error "Condition data error" (error code: 533) will occur.
02H : ∗∗≠P1			
03H : ∗∗≤P1			
04H : ∗∗≥P1			
05H : P1≤∗∗≤P2			
06H : ∗∗≤P1, P2≤∗∗			
07H : DEV=ON		Value (bit No.)	Set the device bit No. X: 0H to 1H, 10H to 1FH Y: 0H, 1H, 10H to 1FH
08H : DEV=OFF			
	2 to 4	Value (positioning data No.)	Set the positioning data No. for starting axis set in "[Da.24] Simultaneous starting axis No.1" and/or "[Da.25] Simultaneous starting axis No.2". Low-order 16-bit : Simultaneous starting axis No.1 positioning data No.1 to 600 (01H to 258H) High-order 16-bit : Simultaneous starting axis No.2 positioning data No.1 to 600 (01H to 258H)

[Da.19] Parameter 2

• QD77MS2/QD77MS4

Set the parameters as required for the "[Da.16] Condition operator".

[Da.16] Condition operator	Setting value	Setting details
01H : ＊＊=P1	—	Not used. (No need to be set.)
02H : ＊＊≠P1		
03H : ＊＊≤P1		
04H : ＊＊≥P1		
05H : P1≤＊＊≤P2	Value	The value of P2 should be equal to or greater than the value of P1. (P1≤P2) If P1 is greater than P2 (P1>P2), the error "Condition data error" (error code: 533) will occur.
06H : ＊＊≤P1, P2≤＊＊		
07H : DEV=ON	—	Not used. (No need to be set.)
08H : DEV=OFF		
10H : Axis 1 selected		
20H : Axis 2 selected		
30H : Axis 1 and 2 selected		
40H : Axis 3 selected	Value (positioning data No.)	Set the positioning data No. for starting axis 3 and/or axis 4. Low-order 16-bit : Axis 3 positioning data No. 1 to 600 (01H to 258H) High-order 16-bit : Axis 4 positioning data No. 1 to 600 (01H to 258H)
50H : Axis 1 and 3 selected		
60H : Axis 2 and 3 selected		
70H : Axis 1, 2, and 3 selected		
80H : Axis 4 selected		
90H : Axis 1 and 4 selected		
A0H : Axis 2 and 4 selected		
B0H : Axis 1, 2, and 4 selected		
C0H : Axis 3 and 4 selected		
D0H : Axis 1, 3, and 4 selected		
E0H : Axis 2, 3, and 4 selected		

• QD77MS16

Set the parameters as required for the "[Da.16] Condition operator" and "[Da.23] Number of simultaneous starting axes".

[Da.16] Condition operator	[Da.23] Number of simultaneous starting axes	Setting value	Setting details
01H :＊＊=P1		—	Not used. (No need to be set.)
02H :＊＊≠P1			
03H : ＊＊≤P1			
04H : ＊＊≥P1			
05H : P1≤＊＊≤P2		Value	The value of P2 should be equal to or greater than the value of P1. (P1≤P2) If P1 is greater than P2 (P1>P2), the error "Condition data error" (error code: 533) will occur.
06H : ＊＊≤P1, P2≤＊＊			
07H : DEV=ON		—	Not used. (No need to be set.)
08H : DEV=OFF			
	2 to 3		
	4	Value (positioning data No.)	Set the positioning data No. for starting axis set in "[Da.26] Simultaneous starting axis No.3" Low-order 16-bit : Simultaneous starting axis No.3 positioning data No. 1 to 600 (01H to 258H) High-order 16-bit : Not used (Set "0")

[Da.23] Number of simultaneous starting axes QD77MS16

Set the number of simultaneous starting axes to execute the simultaneous start.

2: Simultaneous start by 2 axes of the starting axis and axis set in "[Da.24] Simultaneous starting axis No.1".

3: Simultaneous start by 3 axes of the starting axis and axis set in "[Da.24] Simultaneous starting axis No.1" and "[Da.25] Simultaneous starting axis No.2".

4: Simultaneous start by 4 axes of the starting axis and axis set in "[Da.24] Simultaneous starting axis No.1" to "[Da.26] Simultaneous starting axis No.3".

[Da.24] Simultaneous starting axis No.1 to [Da.26] Simultaneous starting axis No.3 QD77MS16

Set the simultaneous starting axis to execute the 2 to 4-axis simultaneous start.

- 2-axis interpolation ..... Set the target axis number in "[Da.24] Simultaneous starting axis No.1".
- 3-axis interpolation ..... Set the target axis number in "[Da.24] Simultaneous starting axis No.1" and "[Da.25] Simultaneous starting axis No.2".
- 4-axis interpolation ..... Set the target axis number in "[Da.24] Simultaneous starting axis No.1" to "[Da.26] Simultaneous starting axis No.3".

Set the axis set as simultaneous starting axis.

0: Axis 1	8: Axis 9
1: Axis 2	9: Axis 10
2: Axis 3	A: Axis 11
3: Axis 4	B: Axis 12
4: Axis 5	C: Axis 13
5: Axis 6	D: Axis 14
6: Axis 7	E: Axis 15
7: Axis 8	F: Axis 16

Note)
- Do not specify the own axis number. (If you do, the error "Condition data error" (error code: 533) will occur during the program execution.)
- When the same axis number or axis number of own axis is set to multiple simultaneous starting axis number, the error "Condition data error" (error code: 533) will occur during the program execution.
- Do not specify the simultaneous starting axis No.2 and simultaneous starting axis No.3 for 2-axis simultaneous start, and not specify the simultaneous starting axis No.3 for 3-axis simultaneous start. The setting value is ignored.

MEMO

5.6 List of monitor data

The setting items of the monitor data are explained in this section.

• Guide to buffer memory address

In the buffer memory address, "n" in "2406+100n", etc. indicates a value corresponding to axis No. such as the following table.

Axis No.	n	Axis No.	n	Axis No.	n	Axis No.	n
1	0	5	4	9	8	13	12
2	1	6	5	10	9	14	13
3	2	7	6	11	10	15	14
4	3	8	7	12	11	16	15

(Note-1): Calculate as follows for the buffer memory address corresponding to each axis.

(Example) For axis No. 16

2406+100n ([Md.23] Axis error No.)=2406+100×15=3906

(Note-2): The range from axis No.1 to 2 (n=0 to 1) is valid in the QD77MS2.

(Note-3): The range from axis No.1 to 4 (n=0 to 3) is valid in the QD77MS4.

5.6.1 System monitor data

Storage item	Storage details	
[Md.1] In test mode flag	Whether the mode is the test mode from the GX Works2 or not is stored. • When not in test mode : OFF • When in test mode : ON Refresh cycle: Immediate	

	Reading the monitor value	Default value	Buffer memory address (common for all axes)	
			QD77MS2 QD77MS4	QD77MS16
	■ Monitoring is carried out with a decimal. Monitor value → ● Storage value 0: Not in test mode 1: In test mode	0	1200	4000

(Unless noted in particular, the monitor value is saved as binary data.)

Starting history (Up to 16 records can be stored)

Storage item	Storage details	Reading the monitor value
[Md.3] Start information	[Storage details] This area stores the start information (restart flag, start origin, and start axis): • Restart flag: Indicates whether the operation has or has not been halted and restarted. • Start origin: Indicates the source of the start signal. • Start axis : Indicates the started axis. Refresh cycle: At start	[Reading the monitor value] ■ Monitoring is carried out with a hexadecimal display.
[Md.4] Start No.	The starting No. is stored. Refresh cycle: At start	■ Monitoring is carried out with a hexadecimal display.

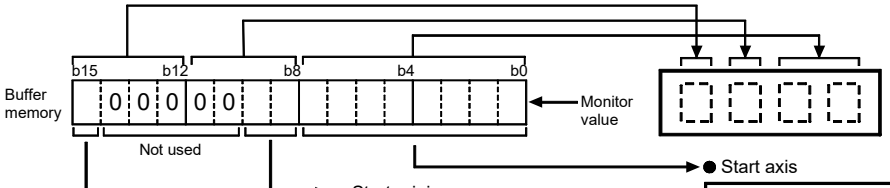

● Start origin

Stored contents	Storage value
PLC CPU	00
External signal	01
GX Works2	10

● Restart flag

Stored contents	Storage value
Restart flag OFF	0
Restart flag ON	1

● Start axis

Stored contents	Storage value
Axis 1	1
Axis 2	2
Axis 3	3
Axis 4	4
Axis 5	5
⋮	⋮
Axis 16	10

✻ : Valid for the range from axis 1 to axis 2 in the QD77MS2, from axis 1 to axis 4 in the QD77MS4.

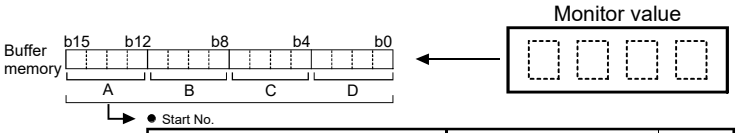

● Start No.

Stored contents	Storage value A	B	C	D	Reference (Decimal)
Positioning operation	0	0	0	1	001
	to				
	0	2	5	8	600
	1	B	5	8	7000
	1	B	5	9	7001
	1	B	5	A	7002
	1	B	5	B	7003
	1	B	5	C	7004
JOG operation	2	3	3	2	9010
Manual pulse generator	2	3	3	3	9011
Machine HPR	2	3	2	9	9001
Fast HPR	2	3	2	A	9002
Current value changing	2	3	2	B	9003
Simultaneous start	2	3	2	C	9004
Synchronous control operation	2	3	3	C	9020
Position control mode → speed control mode switching	2	3	4	6	9030
Position control mode → torque control mode switching	2	3	4	7	9031
Speed control mode → torque control mode switching	2	3	4	8	9032
Torque control mode → speed control mode switching	2	3	4	9	9033
Speed control mode → position control mode switching	2	3	4	A	9034
Torque control mode → position control mode switching	2	3	4	B	9035
Outside the range of control mode setting	2	3	4	C	9036
Position control mode → continuous operation to torque control mode switching	2	3	4	D	9037
Continuous operation to torque control mode → position control mode switching	2	3	4	E	9038
Speed control mode → continuous operation to torque control mode switching	2	3	4	F	9039
Continuous operation to torque control mode → speed control mode switching	2	3	5	0	9040
Torque control mode → continuous operation to torque control mode switching	2	3	5	1	9041
Continuous operation to torque control mode → torque control mode switching	2	3	5	2	9042

Note: If a start signal is issued against an operating axis, a record relating to this event may be output before a record relating to an earlier start signal is output.

	Default value	Buffer memory address (common for all axes)	
		QD77MS2/QD77MS4	QD77MS16
	0000H	● QD77MS2/QD77MS4	

Md.8 Start history pointer	1292

Indicates a pointer No. that is next to the pointer No. assigned to the latest of the existing starting history records.

Item	Pointer No.	0	1	2	3	4	5	6	7	8	9	10	11	12	13	14	15
	Md.3 Start information	1212	1217	1222	1227	1232	1237	1242	1247	1252	1257	1262	1267	1272	1277	1282	1287
	Md.4 Start No.	1213	1218	1223	1228	1233	1238	1243	1248	1253	1258	1263	1268	1273	1278	1283	1288
	Md.54 Start Year: month	1440	1441	1442	1443	1444	1445	1446	1447	1448	1449	1450	1451	1452	1453	1454	1455
	Md.5 Start Day: hour	1214	1219	1224	1229	1234	1239	1244	1249	1254	1259	1264	1269	1274	1279	1284	1289
	Md.6 Start Minute: second	1215	1220	1225	1230	1235	1240	1245	1250	1255	1260	1265	1270	1275	1280	1285	1290
	Md.7 Error judgment	1216	1221	1226	1231	1236	1241	1246	1251	1256	1261	1266	1271	1276	1281	1286	1291

- Each group of buffer memory addresses storing a complete starting history record is assigned a pointer No.
  Example: Pointer No. 0 = Buffer memory addresses 1212 to 1216, 1440
  Pointer No. 1 = Buffer memory addresses 1217 to 1221, 1441
  Pointer No. 2 = Buffer memory addresses 1222 to 1226, 1442
  ⋮
  Pointer No. 15 = Buffer memory addresses 1287 to 1291, 1455
- Each history record is assigned a pointer No. in the range between 0 and 15.
  If the pointer No. 15 has been assigned to a new record, the next record will be assigned the pointer number 0.
  (A new record replaces an older record when a pointer No. is reassigned.)

	Default value	Buffer memory address (common for all axes)	
		QD77MS2/QD77MS4	QD77MS16
	0000H	● QD77MS16	

Md.8 Start history pointer	4092

Indicates a pointer No. that is next to the pointer No. assigned to the latest of the existing starting history records.

Item	Pointer No.	0	1	2	3	4	5	6	7	8	9	10	11	12	13	14	15
	Md.3 Start information	4012	4017	4022	4027	4032	4037	4042	4047	4052	4057	4062	4067	4072	4077	4082	4087
	Md.4 Start No.	4013	4018	4023	4028	4033	4038	4043	4048	4053	4058	4063	4068	4073	4078	4083	4088
	Md.54 Start Year: month	4240	4241	4242	4243	4244	4245	4246	4247	4248	4249	4250	4251	4252	4253	4254	4255
	Md.5 Start Day: hour	4014	4019	4024	4029	4034	4039	4044	4049	4054	4059	4064	4069	4074	4079	4084	4089
	Md.6 Start Minute: second	4015	4020	4025	4030	4035	4040	4045	4050	4055	4060	4065	4070	4075	4080	4085	4090
	Md.7 Error judgment	4016	4021	4026	4031	4036	4041	4046	4051	4056	4061	4066	4071	4076	4081	4086	4091

- Each group of buffer memory addresses storing a complete starting history record is assigned a pointer No.
  Example: Pointer No. 0 = Buffer memory addresses 4012 to 4016, 4240
  Pointer No. 1 = Buffer memory addresses 4017 to 4021, 4241
  Pointer No. 2 = Buffer memory addresses 4022 to 4026, 4242
  ⋮
  Pointer No. 15 = Buffer memory addresses 4087 to 4091, 4255
- Each history record is assigned a pointer No. in the range between 0 and 15.
  If the pointer No. 15 has been assigned to a new record, the next record will be assigned the pointer number 0.
  (A new record replaces an older record when a pointer No. is reassigned.)

<table>
<tr><th colspan="2">Storage item</th><th>Storage details</th><th>Reading the monitor value</th><th></th></tr>
<tr><td rowspan="5">Starting history (Up to 16 records can be stored)</td><td>[Md.54]
Start
Year: month</td><td>The starting time (Year: month) is stored.

Refresh cycle: At start</td><td>■ Monitoring is carried out with a hexadecimal display.
Buffer memory (stored with BCD code)
0 8 0 6
b15 b12 b8 b4 b0
0 0 0 0 1 0 0 0 0 0 0 0 0 1 1 0
0 to 9 0 to 9 0 to 1 0 to 9
Monitor value
0 8 0 6
00 to 99 (year) 01 to 12 (month)</td><td></td></tr>
<tr><td>[Md.5]
Start
Day: hour</td><td>The starting time (Day: hour) is stored.

Refresh cycle: At start</td><td>■ Monitoring is carried out with a hexadecimal display.
Buffer memory (stored with BCD code)
2 8 1 5
b15 b12 b8 b4 b0
0 0 1 0 1 0 0 0 0 0 0 1 0 1 0 1
0 to 3 0 to 9 0 to 2 0 to 9
Monitor value
2 8 1 5
01 to 31 (day) 00 to 23 (hour)</td><td></td></tr>
<tr><td>[Md.6]
Start
Minute: second</td><td>The starting time (Minute: second) is stored.

Refresh cycle: At start</td><td>■ Monitoring is carried out with a hexadecimal display.
Buffer memory (stored with BCD code)
4 9 0 7
b15 b12 b8 b4 b0
0 1 0 0 1 0 0 1 0 0 0 0 0 1 1 1
0 to 5 0 to 9 0 to 5 0 to 9
Monitor value
4 9 0 7
00 to 59 (minute) 00 to 59 (second)</td><td></td></tr>
<tr><td>[Md.7]
Error judgment</td><td colspan="2">[Storage details] This area stores the following results of the error judgment performed upon starting:
• Warning flag
BUSY start
Control mode switching during BUSY
Control mode switching during zero speed OFF
Outside control mode range
Control mode switching
• Error flag
• Error code

Refresh cycle: At start

[Reading the monitor value] ■ Monitoring is carried out with a hexadecimal display.
A B C D
b15 b12 b8 b4 b0
Buffer memory
a B C D
Monitor value
A B C D
●Error flag
Stored contents | Storage value
Error flag OFF | 0
Error flag ON | 1
●Error Code
Convert the hexadecimal value "a, B, C, D" into a decimal value and match it with Section "16.4 List of errors".
●Warning flag
Stored contents | Storage value
Warning OFF | 0
Warning ON | 1</td><td></td></tr>
<tr><td>[Md.8]
Start history pointer</td><td>Indicates a pointer No. that is next to the pointer No. assigned to the latest of the existing starting history records.

Refresh cycle: At start</td><td>■ Monitoring is carried out with a decimal display.
Monitor value
●Storage value (Pointer number)
0 to 15</td><td></td></tr>
</table>

Note: If a start signal is issued against an operating axis, a record relating to this event may be output before a record relating to an earlier start signal is output.

	Default value	Buffer memory address (common for all axes)	
		QD77MS2/QD77MS4	QD77MS16
	0000H	● QD77MS2/QD77MS4 Md.8 Start history pointer: 1292 Indicates a pointer No. that is next to the pointer No. assigned to the latest of the existing starting history records.	
	0000H		
	0000H		
	0000H		
	0		

Item	Pointer No.	0	1	2	3	4	5	6	7	8	9	10	11	12	13	14	15
Md.3	Start information	1212	1217	1222	1227	1232	1237	1242	1247	1252	1257	1262	1267	1272	1277	1282	1287
Md.4	Start No.	1213	1218	1223	1228	1233	1238	1243	1248	1253	1258	1263	1268	1273	1278	1283	1288
Md.54	Start Year: month	1440	1441	1442	1443	1444	1445	1446	1447	1448	1449	1450	1451	1452	1453	1454	1455
Md.5	Start Day: hour	1214	1219	1224	1229	1234	1239	1244	1249	1254	1259	1264	1269	1274	1279	1284	1289
Md.6	Start Minute: second	1215	1220	1225	1230	1235	1240	1245	1250	1255	1260	1265	1270	1275	1280	1285	1290
Md.7	Error judgment	1216	1221	1226	1231	1236	1241	1246	1251	1256	1261	1266	1271	1276	1281	1286	1291

- Each group of buffer memory addresses storing a complete starting history record is assigned a pointer No.
  Example: Pointer No. 0 = Buffer memory addresses 1212 to 1216, 1440
  Pointer No. 1 = Buffer memory addresses 1217 to 1221, 1441
  Pointer No. 2 = Buffer memory addresses 1222 to 1226, 1442
  ⋮
  Pointer No. 15 = Buffer memory addresses 1287 to 1291, 1455
- Each history record is assigned a pointer No. in the range between 0 and 15.
  If the pointer No. 15 has been assigned to a new record, the next record will be assigned the pointer number 0.
  (A new record replaces an older record when a pointer No. is reassigned.)

● QD77MS16

Md.8 Start history pointer: 4092

Indicates a pointer No. that is next to the pointer No. assigned to the latest of the existing starting history records.

Item	Pointer No.	0	1	2	3	4	5	6	7	8	9	10	11	12	13	14	15
Md.3	Start information	4012	4017	4022	4027	4032	4037	4042	4047	4052	4057	4062	4067	4072	4077	4082	4087
Md.4	Start No.	4013	4018	4023	4028	4033	4038	4043	4048	4053	4058	4063	4068	4073	4078	4083	4088
Md.54	Start Year: month	4240	4241	4242	4243	4244	4245	4246	4247	4248	4249	4250	4251	4252	4253	4254	4255
Md.5	Start Day: hour	4014	4019	4024	4029	4034	4039	4044	4049	4054	4059	4064	4069	4074	4079	4084	4089
Md.6	Start Minute: second	4015	4020	4025	4030	4035	4040	4045	4050	4055	4060	4065	4070	4075	4080	4085	4090
Md.7	Error judgment	4016	4021	4026	4031	4036	4041	4046	4051	4056	4061	4066	4071	4076	4081	4086	4091

- Each group of buffer memory addresses storing a complete starting history record is assigned a pointer No.
  Example: Pointer No. 0 = Buffer memory addresses 4012 to 4016, 4240
  Pointer No. 1 = Buffer memory addresses 4017 to 4021, 4241
  Pointer No. 2 = Buffer memory addresses 4022 to 4026, 4242
  ⋮
  Pointer No. 15 = Buffer memory addresses 4087 to 4091, 4255
- Each history record is assigned a pointer No. in the range between 0 and 15.
  If the pointer No. 15 has been assigned to a new record, the next record will be assigned the pointer number 0.
  (A new record replaces an older record when a pointer No. is reassigned.)

Storage item		Storage details	Reading the monitor value
Error history (Up to 16 records can be stored)	[Md.9] Axis in which the error occurred	Stores an axis No. in which an error occurred. Refresh cycle: Immediate	■ Monitoring is carried out with a decimal display. Monitor value → ● Storage value 1: Axis 1 5: Axis 5 9: Axis 9 13: Axis 13 2: Axis 2 6: Axis 6 10: Axis 10 14: Axis 14 3: Axis 3 7: Axis 7 11: Axis 11 15: Axis 15 4: Axis 4 8: Axis 8 12: Axis 12 16: Axis 16 ✻ : Valid for the range from axis 1 to axis 2 in the QD77MS2, from axis 1 to axis 4 in the QD77MS4.
	[Md.10] Axis error No.	Stores an axis error No. Refresh cycle: Immediate	■ Monitoring is carried out with a decimal display. Monitor value → ● Axis error No. For details of error codes, refer to Section 16.4 "List of errors".
	[Md.57] Servo alarm	Stores the LED display details of servo amplifier detection alarm. ("0" is stored other than when a servo alarm occurs.) Refresh cycle: Immediate	■ Monitoring is carried out with a hexadecimal display. • When the SSCNETⅢ/H and MR-J5(W)-B is used Monitor value → ● Servo warning code • When the SSCNET setting is SSCNETⅢ/H and MR-J4(W)-B is used Monitor value (0 □ □ □) → ● Servo warning code • When the SSCNET setting is SSCNETⅢ and MR-J3(W)-B is used Monitor value (0 0 □ □) → ● Servo warning code
	[Md.61] Driver operation alarm number	Store the driver operation alarm number. Refresh cycle: Immediate	■ Monitoring is carried out with a hexadecimal display. Monitor value → ● Driver operation alarm, ● Detailed number Example) When the driver operation alarm is "10H" and the detailed number is "23H", "1023H" is displayed.
	[Md.55] Axis error occurrence (Year: month)	Stores the time (Year: month) at which an axis error was detected. Refresh cycle: Immediate	■ Monitoring is carried out with a hexadecimal display. Buffer memory (stored with BCD code): 0 8 0 6 (b15 b12 b8 b4 b0; 0 to 9, 0 to 9, 0 to 1, 0 to 9) → Monitor value: 0 8 0 6 00 to 99 (year) 01 to 12 (month)
	[Md.11] Axis error occurrence (Day: hour)	Stores the time (Day: hour) at which an axis error was detected. Refresh cycle: Immediate	■ Monitoring is carried out with a hexadecimal display. Buffer memory (stored with BCD code): 2 8 1 5 (b15 b12 b8 b4 b0; 0 to 3, 0 to 9, 0 to 2, 0 to 9) → Monitor value: 2 8 1 5 01 to 31 (day) 00 to 23 (hour)
	[Md.12] Axis error occurrence (Minute: second)	Stores the time (Minute: second) at which an axis error was detected. Refresh cycle: Immediate	■ Monitoring is carried out with a hexadecimal display. Buffer memory (stored with BCD code): 4 9 0 7 (b15 b12 b8 b4 b0; 0 to 5, 0 to 9, 0 to 5, 0 to 9) → Monitor value: 4 9 0 7 00 to 59 (minute) 00 to 59 (second)
	[Md.13] Error history pointer	Indicates a pointer No. that is next to the pointer No. assigned to the latest of the existing records. Refresh cycle: Immediate	■ Monitoring is carried out with a decimal display. Monitor value → ● Storage value (Pointer number) 0 to 15

	Default value	Buffer memory address (common for all axes)	
		QD77MS2/QD77MS4	QD77MS16
	0	• Each history record is assigned a pointer No. in the range between 0 and 15. If the pointer No. 15 has been assigned to a new record, the next record will be assigned the pointer number 0. (A new record replaces an older record when a pointer No. is reassigned.) ● QD77MS2/QD77MS4 Md.13 Error history pointer: 1357 Indicates a pointer No. that is next to the pointer No. assigned to the latest of the existing error history records.	
	0		
	0000H		
	0000H		
	0000H	● QD77MS16 Md.13 Error history pointer: 4157 Indicates a pointer No. that is next to the pointer No. assigned to the latest of the existing error history records.	
	0000H		
	0000H		
	0		

Item

Pointer No.	0	1	2	3	4	5	6	7	8	9	10	11	12	13	14	15
Md.9 Axis in which the error occurred	1293	1297	1301	1305	1309	1313	1317	1321	1325	1329	1333	1337	1341	1345	1349	1353
Md.10 Axis error No.	1294	1298	1302	1306	1310	1314	1318	1322	1326	1330	1334	1338	1342	1346	1350	1354
Md.57 Servo alarm	31300	31301	31302	31303	31304	31305	31306	31307	31308	31309	31310	31311	31312	31313	31314	31315
Md.61 Driver operation alarm number	31333	31334	31335	31336	31337	31338	31339	31340	31341	31342	31343	31344	31345	31346	31347	31348
Md.55 Axis error occurrence (Year: month)	1456	1457	1458	1459	1460	1461	1462	1463	1464	1465	1466	1467	1468	1469	1470	1471
Md.11 Axis error occurrence (Day: hour)	1295	1299	1303	1307	1311	1315	1319	1323	1327	1331	1335	1339	1343	1347	1351	1355
Md.12 Axis error occurrence (Minute: second)	1296	1300	1304	1308	1312	1316	1320	1324	1328	1332	1336	1340	1344	1348	1352	1356

• Each group of buffer memory addresses storing a complete error history record is assigned a pointer No.
Example: Pointer No. 0 = Buffer memory addresses 1293 to 1296, 1456, 31300
Pointer No. 1 = Buffer memory addresses 1297 to 1300, 1457, 31301
⋮
Pointer No. 15 = Buffer memory addresses 1353 to 1356, 1471, 31315

Item

Pointer No.	0	1	2	3	4	5	6	7	8	9	10	11	12	13	14	15
Md.9 Axis in which the error occurred	4093	4097	4101	4105	4109	4113	4117	4121	4125	4129	4133	4137	4141	4145	4149	4153
Md.10 Axis error No.	4094	4098	4102	4106	4110	4114	4118	4122	4126	4130	4134	4138	4142	4146	4150	4154
Md.57 Servo alarm	31300	31301	31302	31303	31304	31305	31306	31307	31308	31309	31310	31311	31312	31313	31314	31315
Md.61 Driver operation alarm number	31333	31334	31335	31336	31337	31338	31339	31340	31341	31342	31343	31344	31345	31346	31347	31348
Md.55 Axis error occurrence (Year: month)	4256	4257	4258	4259	4260	4261	4262	4263	4264	4265	4266	4267	4268	4269	4270	4271
Md.11 Axis error occurrence (Day: hour)	4095	4099	4103	4107	4111	4115	4119	4123	4127	4131	4135	4139	4143	4147	4151	4155
Md.12 Axis error occurrence (Minute: second)	4096	4100	4104	4108	4112	4116	4120	4124	4128	4132	4136	4140	4144	4148	4152	4156

• Each group of buffer memory addresses storing a complete error history record is assigned a pointer No.
Example: Pointer No. 0 = Buffer memory addresses 4093 to 4096, 4256, 31300
Pointer No. 1 = Buffer memory addresses 4097 to 4100, 4257, 31301
⋮
Pointer No. 15 = Buffer memory addresses 4153 to 4156, 4271, 31315

Storage item		Storage details	Reading the monitor value
Warning history (Up to 16 records can be stored)	[Md.14] Axis in which the warning occurred	Stores an axis No. in which a warning occurred. Refresh cycle: Immediate	■ Monitoring is carried out with a decimal display. Monitor value ● Storage value 1: Axis 1 5: Axis 5 9: Axis 9 13: Axis 13 2: Axis 2 6: Axis 6 10: Axis 10 14: Axis 14 3: Axis 3 7: Axis 7 11: Axis 11 15: Axis 15 4: Axis 4 8: Axis 8 12: Axis 12 16: Axis 16 ✻ : Valid for the range from axis 1 to axis 2 in the QD77MS2, from axis 1 to axis 4 in the QD77MS4.
	[Md.15] Axis warning No.	Stores an axis warning No. Refresh cycle: Immediate	■ Monitoring is carried out with a decimal display. Monitor value ● Axis warning No. For details of warning codes, refer to Section 16.5"List of warnings".
	[Md.58] Servo warning	Stores the LED display details of servo amplifier detection warning. ("0" is stored other than when a servo warning occurs.) Refresh cycle: Immediate	■ Monitoring is carried out with a hexadecimal display. • When the SSCNET setting is SSCNETⅢ/H and MR-J5(W)-B is used Monitor value ● Servo warning code • When the SSCNET setting is SSCNETⅢ/H and MR-J4(W)-B is used Monitor value 0 ● Servo warning code • When the SSCNET setting is SSCNETⅢ and MR-J3(W)-B is used Monitor value 0 0 ● Servo warning code
	[Md.56] Axis warning occurrence (Year: month)	Stores the time (Year: month) at which an axis warning was detected. Refresh cycle: Immediate	■ Monitoring is carried out with a hexadecimal display. Buffer memory (stored with BCD code) 0 8 0 6 b15 b12 b8 b4 b0 0 0 0 0 1 0 0 0 0 0 0 0 0 1 1 0 0 to 9 0 to 9 0 to 1 0 to 9 Monitor value 0 8 0 6 00 to 99 (year) 01 to 12 (month)
	[Md.16] Axis warning occurrence (Day: hour)	Stores the time (Day: hour) at which an axis warning was detected. Refresh cycle: Immediate	■ Monitoring is carried out with a hexadecimal display. Buffer memory (stored with BCD code) 2 8 1 5 b15 b12 b8 b4 b0 0 0 1 0 1 0 0 0 0 0 0 1 0 1 0 1 0 to 3 0 to 9 0 to 2 0 to 9 Monitor value 2 8 1 5 01 to 31 (day) 00 to 23 (hour)
	[Md.17] Axis warning occurrence (Minute: second)	Stores the time (Minute: second) at which an axis warning was detected. Refresh cycle: Immediate	■ Monitoring is carried out with a hexadecimal display. Buffer memory (stored with BCD code) 4 9 0 7 b15 b12 b8 b4 b0 0 1 0 0 1 0 0 1 0 0 0 0 0 1 1 1 0 to 5 0 to 9 0 to 5 0 to 9 Monitor value 4 9 0 7 00 to 59 (minute) 00 to 59 (second)
	[Md.18] Warning history pointer	Indicates a pointer No. that is next to the pointer No. assigned to the latest of the existing records. Refresh cycle: Immediate	■ Monitoring is carried out with a decimal display. Monitor value ● Storage value (Pointer number) 0 to 15

	Default value	Buffer memory address (common for all axes)	
		QD77MS2/QD77MS4	QD77MS16
	0	● QD77MS2/QD77MS4	

Md.18 Warning history pointer	1422

Indicates a pointer No. that is next to the pointer No. assigned to the latest of the existing warning history records.

	Pointer No.	0	1	2	3	4	5	6	7	8	9	10	11	12	13	14	15
Item	Md.14 Axis in which the warning occurred	1358	1362	1366	1370	1374	1378	1382	1386	1390	1394	1398	1402	1406	1410	1414	1418
	Md.15 Axis warning No.	1359	1363	1367	1371	1375	1379	1383	1387	1391	1395	1399	1403	1407	1411	1415	1419
	Md.58 Servo warning	31316	31317	31318	31319	31320	31321	31322	31323	31324	31325	31326	31327	31328	31329	31330	31331
	Md.56 Axis warning occurrence (Year: month)	1472	1473	1474	1475	1476	1477	1478	1479	1480	1481	1482	1483	1484	1485	1486	1487
	Md.16 Axis warning occurrence (Day: hour)	1360	1364	1368	1372	1376	1380	1384	1388	1392	1396	1400	1404	1408	1412	1416	1420
	Md.17 Axis warning occurrence (Minute: second)	1361	1365	1369	1373	1377	1381	1385	1389	1393	1397	1401	1405	1409	1413	1417	1421

	Default value
	0
	0000H

- Each group of buffer memory addresses storing a complete warning history record is assigned a pointer No.
  Example: Pointer No. 0 = Buffer memory addresses 1358 to 1361, 1472, 31316
  Pointer No. 1 = Buffer memory addresses 1362 to 1365, 1473, 31317
  Pointer No. 2 = Buffer memory addresses 1366 to 1369, 1474, 31318
  ⋮
  Pointer No. 15 = Buffer memory addresses 1418 to 1421, 1487, 31331
- Each history record is assigned a pointer No. in the range between 0 and 15.
  If the pointer No. 15 has been assigned to a new record, the next record will be assigned the pointer number 0.
  (A new record replaces an older record when a pointer No. is reassigned.)

	Default value	QD77MS16
	0000H	● QD77MS16

Md.18 Warning history pointer	4222

Indicates a pointer No. that is next to the pointer No. assigned to the latest of the existing warning history records.

	Pointer No.	0	1	2	3	4	5	6	7	8	9	10	11	12	13	14	15
Item	Md.14 Axis in which the warning occurred	4158	4162	4166	4170	4174	4178	4182	4186	4190	4194	4198	4202	4206	4210	4214	4218
	Md.15 Axis warning No.	4159	4163	4167	4171	4175	4179	4183	4187	4191	4195	4199	4203	4207	4211	4215	4219
	Md.58 Servo warning	31316	31317	31318	31319	31320	31321	31322	31323	31324	31325	31326	31327	31328	31329	31330	31331
	Md.56 Axis warning occurrence (Year: month)	4272	4273	4274	4275	4276	4277	4278	4279	4280	4281	4282	4283	4284	4285	4286	4287
	Md.16 Axis warning occurrence (Day: hour)	4160	4164	4168	4172	4176	4180	4184	4188	4192	4196	4200	4204	4208	4212	4216	4220
	Md.17 Axis warning occurrence (Minute: second)	4161	4165	4169	4173	4177	4181	4185	4189	4193	4197	4201	4205	4209	4213	4217	4221

	Default value
	0000H
	0

- Each group of buffer memory addresses storing a complete warning history record is assigned a pointer No.
  Example: Pointer No. 0 = Buffer memory addresses 4158 to 4161, 4272, 31316
  Pointer No. 1 = Buffer memory addresses 4162 to 4165, 4273, 31317
  Pointer No. 2 = Buffer memory addresses 4166 to 4169, 4274, 31318
  ⋮
  Pointer No. 15 = Buffer memory addresses 4218 to 4221, 4287, 31331
- Each history record is assigned a pointer No. in the range between 0 and 15.
  If the pointer No. 15 has been assigned to a new record, the next record will be assigned the pointer number 0.
  (A new record replaces an older record when a pointer No. is reassigned.)

Storage item	Storage details	Reading the monitor value	
[Md.19] Number of write accesses to flash ROM	Stores the number of write accesses to the flash ROM after the power is switched ON. The count is cleared to "0" when the number of write accesses reaches 26 and an error reset operation is performed. Refresh cycle: Immediate	■ Monitoring is carried out with a decimal display. 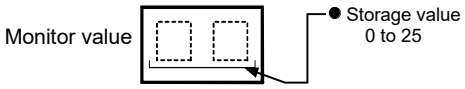	
[Md.50] Forced stop input	This area stores the states (ON/OFF) of forced stop input. Refresh cycle: Operation cycle	■ Monitoring is carried out with a decimal display. 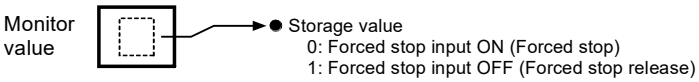	
[Md.51] Amplifier-less operation mode status	Indicates a current operation mode. Refresh cycle: Immediate	■ Monitoring is carried out with a decimal display. 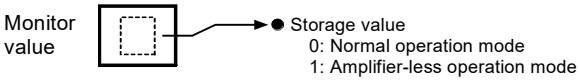	
[Md.52] Communication between amplifiers axes searching flag	Stores the detection status of axis that set communication between amplifiers. Refresh cycle: Immediate	■ Monitoring is carried out with a decimal display. 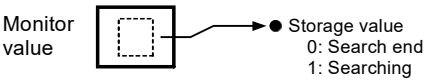	
[Md.53] SSCNET control status	Stores the connect/disconnect status of SSCNET communication. Refresh cycle: Immediate	■ Monitoring is carried out with a decimal display. 	
[Md.59] Module information	Stores the module information. Refresh cycle: At power supply ON	■ Monitoring is carried out with a hexadecimal display. 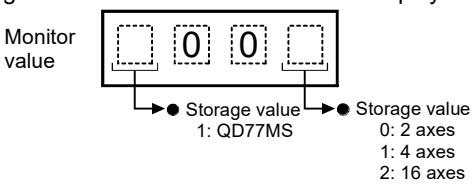	
[Md.130] OS version	Stores the first five digits of the module product information. Refresh cycle: At power supply ON	■ Monitoring is carried out with a hexadecimal display. Buffer memory (stored with BCD code) 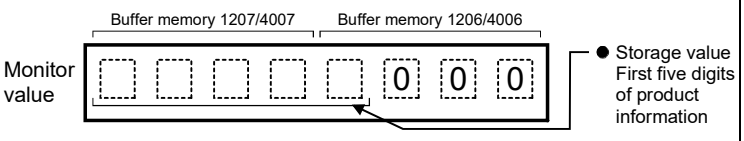	
[Md.131] Digital oscilloscope running flag	Stores the RUN status of digital oscilloscope. Refresh cycle: Main cycle	■ Monitoring is carried out with a decimal display. 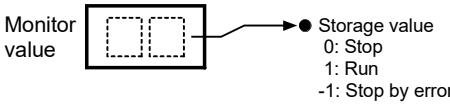	

	Default value	Buffer memory address (common for all axes)	
		QD77MS2/QD77MS4	QD77MS16
	0	1424 1425	4224 4225
	0	1431	4231
	0	1432	4232
	0	1434	4234
	0	1433	4233
	QD77MS2: 1000H QD77MS4: 1001H QD77MS16: 1002H	31332 (Monitors this buffer memory address too. QD77MS2/QD77MS4: 1435, QD77MS16: 4235)	
	Factory-set product information	1206 1207	4006 4007
	0	1211	4011

Storage item	Storage details	Reading the monitor value	
[Md.132] Operation cycle setting	Stores the current operation cycle. Refresh cycle: At power supply ON	■ Monitoring is carried out with a decimal display. 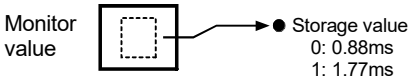	
[Md.133] Operation cycle over flag	This flag turns ON when the operation cycle time exceeds operation cycle. Refresh cycle: Immediate	■ Monitoring is carried out with a decimal display. [POINT] Latch status of operation cycle over is indicated. When this flag turns ON, correct the positioning detail or change the operation cycle longer than current setting.	
[Md.134] Operation time	Stores the time that took for operation every operation cycle. Refresh cycle: Operation cycle	■ Monitoring is carried out with a decimal display. 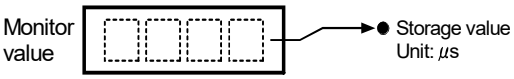	
[Md.135] Maximum operation time	Stores the maximum value of operation time after each module's power supply ON. Refresh cycle: Immediate	■ Monitoring is carried out with a decimal display. 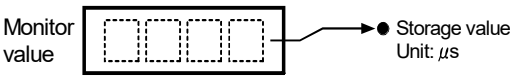	

	Default value	Buffer memory address (common for all axes)	
		QD77MS2/QD77MS4	QD77MS16
	0	1438	4238
	0	1439	4239
	0	1208	4008
	0	1209	4009

5.6.2 Axis monitor data

Storage item	Storage details	
[Md.20] Command position value	The currently commanded address is stored. (Different from the actual motor position during operation) The current position address is stored. If "degree" is selected as the unit, the addresses will have a ring structure for values between 0 and 359.99999 degrees. • The HP address is stored when the machine HPR is completed. • When the current value is changed with the current value changing function, the changed value is stored. Refresh cycle: Operation cycle	
[Md.21] Feed machine value	The address of the current position according to the machine coordinates will be stored. (Different from the actual motor position during operation) Note that the current value changing function will not change the feed machine value. Under the speed control mode, the feed machine value is constantly updated always, irrespective of the parameter setting. The value will not be cleared to "0" at the beginning of fixed-feed control. Even if "degree" is selected as the unit, the addresses will become a cumulative value. (They will not have a ring structure for values between 0 and 359.99999 degrees). However, the feed machine value is restored with cumulating the feed machine value before the power supply OFF (the rounded value within the range of 0 to 359.99999°) to the movement amount during the power supply OFF at the communication start with servo amplifier after the power supply ON or PLC CPU reset. • Machine coordinates: Characteristic coordinates determined with machine Refresh cycle: Operation cycle	
[Md.22] Speed command	The speed of the operating workpiece is stored. (May be different from the actual motor speed during operation) • During interpolation operation, the speed is stored in the following manner. Reference axis : Composite speed or reference axis speed (Set with [Pr.20]) Interpolation axis : 0 Refresh cycle: Operation cycle [POINT] In case of the single axis operation, "[Md.22] Speed command" and "[Md.28] Axis speed command" are identical. In the composite mode of the interpolation operation, "[Md.22] Speed command" is a speed in a composite direction and "[Md.28] Axis speed command" is that in each axial direction. "[Md.22] Speed command" is indicated as an absolute value. Check the operation direction with [Md.20] Command position value.	

	Reading the monitor value	Default value	Buffer memory address	
			QD77MS2 QD77MS4	QD77MS16
	■ Monitoring is carried out with a hexadecimal.	0000H	800+100n 801+100n	2400+100n 2401+100n
		0000H	802+100n 803+100n	2402+100n 2403+100n
		0000H	804+100n 805+100n	2404+100n 2405+100n

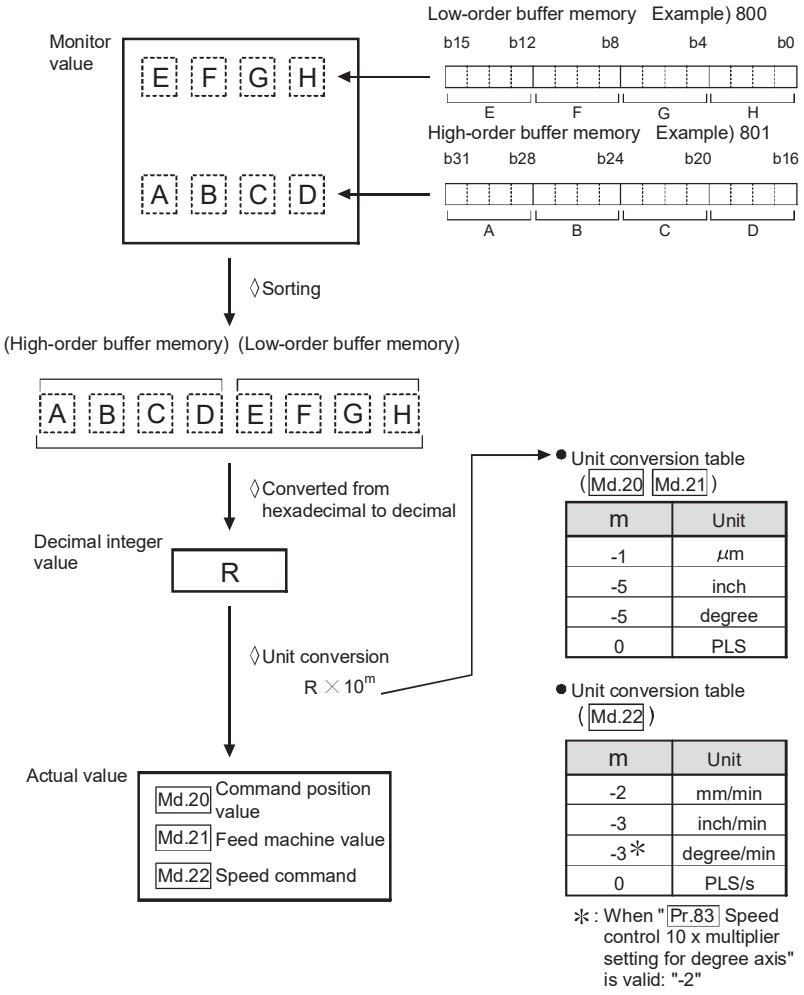

n: Axis No.-1

Storage item	Storage details	
[Md.23] Axis error No.	When an axis error is detected, the error code corresponding to the error details is stored. • The latest error code is always stored. (When a new axis error occurs, the error code is overwritten.) • When "[Cd.5] Axis error reset" (axis control data) turns ON, the axis error No. is cleared (set to 0). Refresh cycle: Immediate	
[Md.24] Axis warning No.	Whenever an axis warning is reported, a related warning code is stored. • This area stores the latest warning code always. (Whenever an axis warning is reported, a new warning code replaces the stored warning code.) • When the "[Cd.5] Axis error reset" (axis control data) is set to ON, the axis warning No. is cleared to "0". Refresh cycle: Immediate	
[Md.25] Valid M code	This area stores an M code that is currently active (i.e. set to the positioning data relating to the current operation). When the PLC READY signal [Y0] goes OFF, the value is set to "0". Refresh cycle: Immediate	
[Md.26] Axis operation status	This area stores the axis operation status. Refresh cycle: Immediate	

	Reading the monitor value	Default value	Buffer memory address	
			QD77MS2 QD77MS4	QD77MS16
	■ Monitoring is carried out with a decimal display. 	0	806+100n	2406+100n
	■ Monitoring is carried out with a decimal display. 	0	807+100n	2407+100n
	■ Monitoring is carried out with a decimal display. 	0	808+100n	2408+100n
	■ Monitoring is carried out with a decimal display. Monitor value 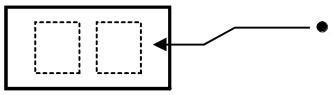	0	809+100n	2409+100n

n: Axis No.-1

Storage item	Storage details	
[Md.27] Current speed	The "[Da.8] Command speed" used by the positioning data currently being executed is stored. • If "[Da.8] Command speed" is set to "-1", this area stores the command speed set by the positioning data used one step earlier. • If "[Da.8] Command speed" is set to a value other than "-1", this area stores the command speed set by the current positioning data. • When speed change function is executed, this area stores "[Cd.14] New speed value". (For details of change speed function, refer to Section 13.5.1.) Refresh cycle: Immediate	
[Md.28] Axis speed command	• The speed which is actually output as a command at that time in each axis is stored. (May be different from the actual motor speed) "0" is stored when the axis is at a stop. Refresh cycle: Operation cycle [POINT] Refer to "[Md.22] Speed command". "[Md.28] Axis speed command" is indicated as an absolute value. Check the operation direction with [Md.20] Command position value.	
[Md.29] Speed-position switching control positioning movement amount	• The movement amount for the position control to end after changing to position control with the speed-position switching control is stored. When the control method is "Reverse run: position/speed", the negative value is stored. Refresh cycle: Immediate	

	Reading the monitor value	Default value	Buffer memory address	
			QD77MS2 QD77MS4	QD77MS16
	■ Monitoring is carried out with a decimal display. 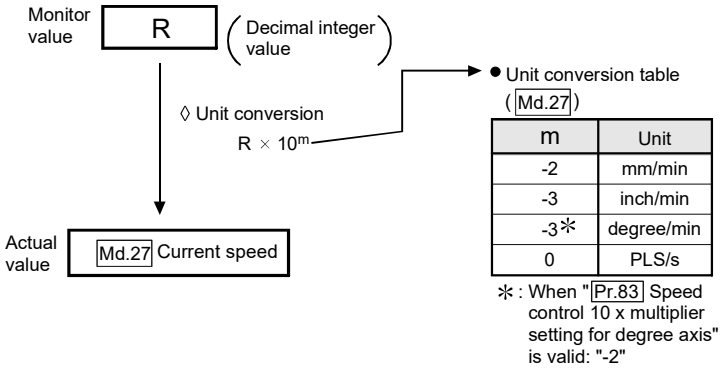 	0	810+100n 811+100n	2410+100n 2411+100n
	■ Monitoring is carried out with a hexadecimal. 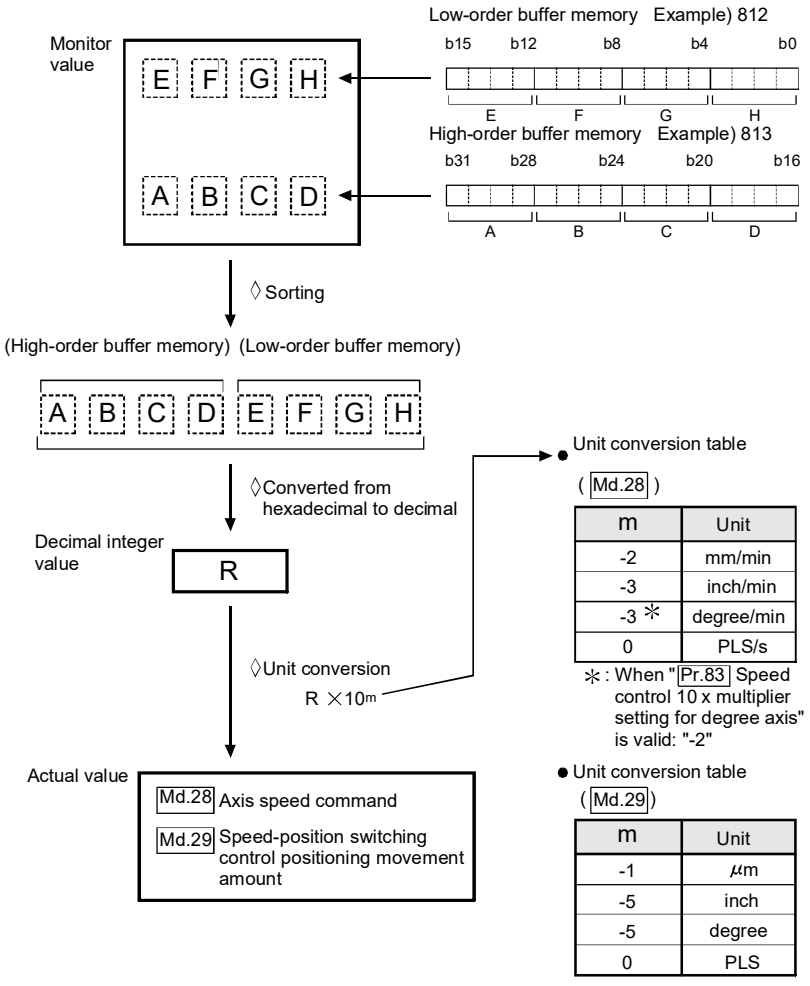 	0000H	812+100n 813+100n	2412+100n 2413+100n
		0000H	814+100n 815+100n	2414+100n 2415+100n

n: Axis No.-1

Storage item	Storage details	
[Md.30] External input signal	The ON/OFF state of the external input signal is stored. The following items are stored. • Lower limit signal ＊ • Upper limit signal ＊ • Stop signal ＊＊ • External command signal/switching signal • Proximity dog signal ＊ ＊: This area stores the states of the external input signal (QD77MS), external input signal (servo amplifier) or buffer memory of QD77MS set by "[Pr.80] External input signal selection". ＊＊: This area stores the states of the external input signal (QD77MS) or buffer memory of QD77MS set by "[Pr.80] External input signal selection". Refresh cycle: Operation cycle	

	Reading the monitor value	Default value	Buffer memory address	
			QD77MS2 QD77MS4	QD77MS16
	■ Monitoring is carried out with a hexadecimal. 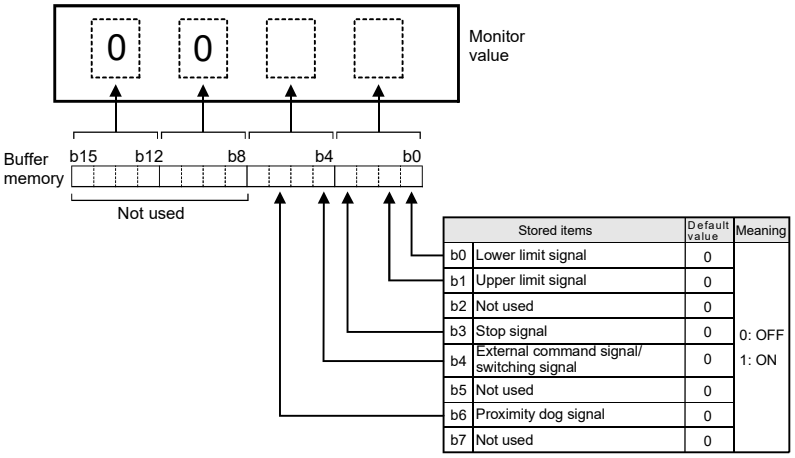 Stored items / Default value / Meaning (0: OFF, 1: ON) b0 Lower limit signal — 0 b1 Upper limit signal — 0 b2 Not used — 0 b3 Stop signal — 0 b4 External command signal/ switching signal — 0 b5 Not used — 0 b6 Proximity dog signal — 0 b7 Not used — 0	0000H	816+100n	2416+100n

n: Axis No.-1

Storage item	Storage details	
[Md.31] Status	This area stores the states (ON/OFF) of various flags. Information on the following flags is stored. ● In speed control flag This signal that comes ON under the speed control can be used to judge whether the operation is performed under the speed control or position control. The signal goes OFF when the power is switched ON, under the position control, and during JOG operation or manual pulse generator operation. During the speed-position or position-speed switching control, this signal comes ON only when the speed control is in effect. During the speed-position switching control, this signal goes OFF when the speed-position switching signal executes a switching over from speed control to position control. During the position-speed switching control, this signal comes ON when the position-speed switching signal executes a switching over from position control to speed control. ● Speed-position switching latch flag This signal is used during the speed-position switching control for interlocking the movement amount change function. During the speed-position switching control, this signal comes ON when position control takes over. This signal goes OFF when the next positioning data is processed, and during JOG operation or manual pulse generator operation. ● Command in-position flag This signal is ON when the remaining distance is equal to or less than the command in-position range (set by a detailed parameter). This signal remains OFF with data that specify the continuous path control (P11) as the operation pattern. The state of this signal is monitored every operation cycle except when the monitoring is canceled under the speed control or while the speed control is in effect during the speed-position or position-speed switching control. While operations are performed with interpolation, this signal comes ON only in respect of the starting axis. (This signal goes OFF in respect of all axes upon starting.) ● HPR request flag This signal comes ON when an HPR operation is required, and goes OFF when the HPR operation completes. (For details of HPR request flag, refer to the remark of Section 8.1.1.) ● HPR complete flag This signal comes ON when a machine HPR operation completes normally. This signal goes OFF when the operation start. ● Position-speed switching latch flag This signal is used during the position-speed switching control for interlocking the command speed change function. During the position-speed switching control, this signal comes ON when speed control takes over. This signal goes OFF when the next positioning data is processed, and during JOG operation or manual pulse generator operation. ● Axis warning detection flag This signal comes On when an axis warning is reported and goes OFF when the axis error reset signal comes ON. ● Speed change 0 flag This signal comes ON when a speed change request that specifies 0 as the new speed value is issued. This signal comes ON when a speed change request that specifies a new speed value other than 0 is issued. ● M code ON QD77MS16 In the WITH mode, this signal turns ON when the positioning data operation is started. In the AFTER mode, this signal turns ON when the positioning data operation is completed. This signal turns OFF with the "[Cd.7] M code OFF request". When M code is not designated (when "[Da.10] M code/Condition data No./Number of LOOP to LEND repetitions" is "0"), this signal will remain OFF. With using continuous path control for the positioning operation, the positioning will continue even when this signal does not turn OFF. However, the warning "M code ON signal ON" (warning code: 503) will occur. When the PLC READY signal [Y0] turns OFF, the M code ON signal will also turn OFF. If operation is started while the M code is ON, the error "M code ON signal start" (error code: 536) will occur. ● Error detection QD77MS16 This signal turns ON when an error listed in Section 16.3 occurs, and turns OFF when the error is reset on "[Cd.5] Axis error reset". ● Start complete QD77MS16 This signal turns ON when the positioning start signal turns ON and the Simple Motion module starts the positioning process. (The start complete signal also turns ON during HPR control.) ● Positioning complete QD77MS16 This signal turns ON for the time set in "[Pr.40] Positioning complete signal output time" from the instant when the positioning control for each positioning data No. is completed. For the interpolation control, the positioning complete signal of interpolation axis turns ON during the time set to the reference axis. (It does not turn ON when "[Pr.40] Positioning complete signal output time" is "0".) If positioning (including HPR), JOG/Inching operation, or manual pulse generator operation is started while this signal is ON, the signal will turn OFF. This signal will not turn ON when speed control or positioning is canceled midway. Refresh cycle: Immediate	

	Reading the monitor value	Default value	Buffer memory address	
			QD77MS2 QD77MS4	QD77MS16
	■ Monitoring is carried out with a hexadecimal display. 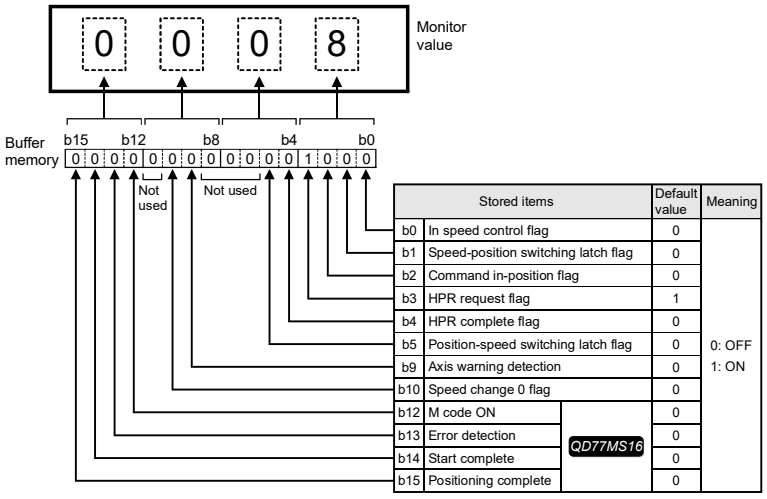 Stored items / Default value / Meaning b0 In speed control flag — 0 b1 Speed-position switching latch flag — 0 b2 Command in-position flag — 0 b3 HPR request flag — 1 b4 HPR complete flag — 0 b5 Position-speed switching latch flag — 0 b9 Axis warning detection — 0 b10 Speed change 0 flag — 0 b12 M code ON — 0 b13 Error detection — 0 b14 Start complete — 0 b15 Positioning complete — 0 QD77MS16 Meaning: 0: OFF, 1: ON	0008H	817+100n	2417+100n

n: Axis No.-1

Storage item	Storage details	
[Md.32] Target value	This area stores the target value ([Da.6] Positioning address/movement amount) for a positioning operation. • At the beginning of positioning control and current value changing: Stores the value of "[Da.6] Positioning address/movement amount". • At the HP shift operation of HPR control: Stores the value of HP shift amount. • At other times : Stores "0". Refresh cycle: Immediate	
[Md.33] Target speed	• During operation with positioning data : The actual target speed, considering the override and speed limit value, etc., is stored. "0" is stored when positioning is completed. • During interpolation of position control : The composite speed or reference axis speed is stored in the reference axis address, and "0" is stored in the interpolation axis address. • During interpolation of speed control : The target speeds of each axis are stored in the monitor of the reference axis and interpolation axis. • During JOG operation : The actual target speed, considering the JOG speed limit value for the JOG speed, is stored. • During manual pulse generator operation : "0" is stored. Refresh cycle: Immediate [POINT] The target speed is when an override is made to the command speed. When the speed limit value is overridden, the target speed is restricted to the speed limit value. The target speed changes every time data is switched, but does not change in an acceleration/deceleration state inside each piece of data (changes with the speed change because the target speed changes.)	
[Md.34] Movement amount after proximity dog ON	• "0" is stored when machine HPR starts. • After machine HPR starts, the movement amount from the proximity dog ON to the machine HPR completion is stored. (Movement amount: Movement amount to machine HPR completion using proximity dog ON as "0".) Refresh cycle: Immediate	

<table>
<tr><th rowspan="2"></th><th rowspan="2">Reading the monitor value</th><th rowspan="2">Default value</th><th colspan="2">Buffer memory address</th></tr>
<tr><th>QD77MS2
QD77MS4</th><th>QD77MS16</th></tr>
<tr><td></td><td>■ Monitoring is carried out with a decimal display.
 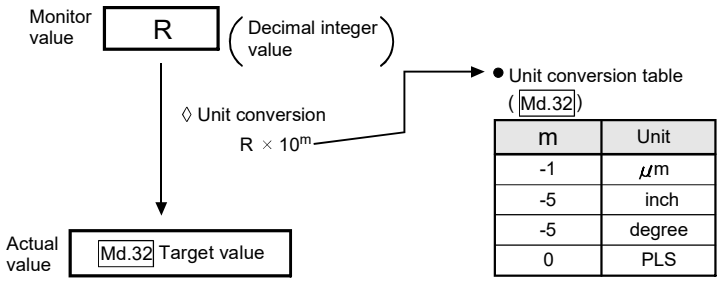
</td><td>0</td><td>818+100n
819+100n</td><td>2418+100n
2419+100n</td></tr>
<tr><td></td><td>■ Monitoring is carried out with a hexadecimal display.
 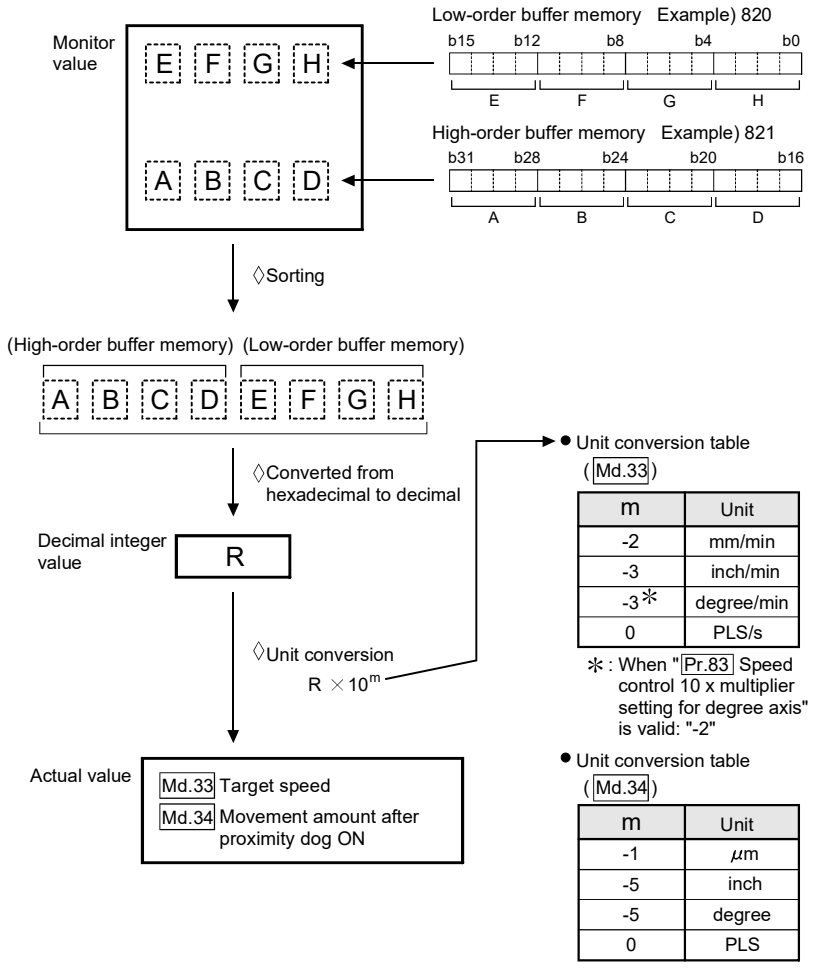
</td><td>0000H</td><td>820+100n
821+100n</td><td>2420+100n
2421+100n</td></tr>
<tr><td></td><td></td><td>0000H</td><td>824+100n
825+100n</td><td>2424+100n
2425+100n</td></tr>
</table>

n: Axis No.-1

Storage item	Storage details	
[Md.35] Torque limit stored value/ forward torque limit stored value	"[Pr.17] Torque limit setting value", "[Cd.101] Torque output setting value", "[Cd.22] New torque value/forward new torque value" or "[Pr.54] HPR torque limit value" is stored. • During positioning start, JOG operation start, manual pulse generator operation : "[Pr.17] Torque limit setting value" or "[Cd.101] Torque output setting value" is stored. • When a value is set in "[Cd.22] New torque value/forward new torque value" during operation : "[Cd.22] New torque value/forward new torque value" is stored. • When HPR : "[Pr.17] Torque limit setting value" or "[Cd.101] Torque output setting value" is stored. However, "[Pr.54] HPR torque limit value" is stored after the speed reaches "[Pr.47] Creep speed". Refresh cycle: Immediate	
[Md.36] Special start data instruction code setting value	• The "instruction code" used with special start and indicated by the start data pointer currently being executed is stored. Refresh cycle: Immediate	
[Md.37] Special start data instruction parameter setting value	The "instruction parameter" used with special start and indicated by the start data pointer currently being executed is stored. The stored value differs according to the value set for [Md.36]. Refresh cycle: Immediate	
[Md.38] Start positioning data No. setting value	• The "positioning data No." indicated by the start data pointer currently being executed is stored. Refresh cycle: Immediate	

<table>
<tr><th rowspan="2">Reading the monitor value</th><th rowspan="2">Default value</th><th colspan="2">Buffer memory address</th></tr>
<tr><th>QD77MS2
QD77MS4</th><th>QD77MS16</th></tr>
<tr><td>■ Monitoring is carried out with a decimal display.
 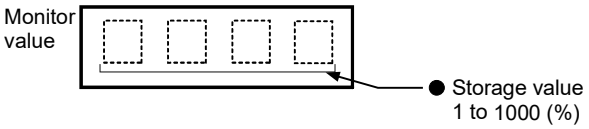
</td><td>0</td><td>826+100n</td><td>2426+100n</td></tr>
<tr><td>■ Monitoring is carried out with a decimal display.
 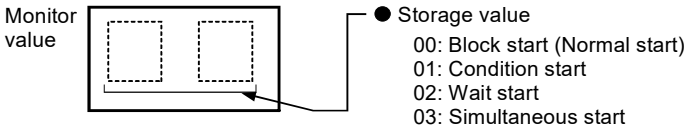
</td><td>0</td><td>827+100n</td><td>2427+100n</td></tr>
<tr><td>■ Monitoring is carried out with a decimal display.
 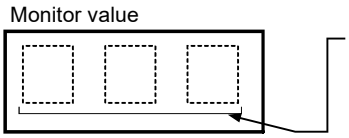

<table><tr><th>Md.36 setting value</th><th>Stored contents</th><th>Storage value</th></tr><tr><td>00
06</td><td>None</td><td>None</td></tr><tr><td>01
02
03
05</td><td>Condition data No.</td><td>1 to 10</td></tr><tr><td>04</td><td>Number of repetitions</td><td>0 to 255</td></tr></table></td><td>0</td><td>828+100n</td><td>2428+100n</td></tr>
<tr><td>■ Monitoring is carried out with a decimal display.
 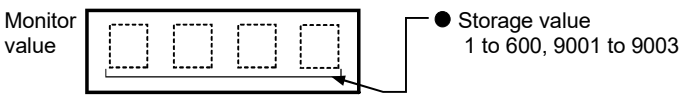
</td><td>0</td><td>829+100n</td><td>2429+100n</td></tr>
</table>

n: Axis No.-1

Storage item	Storage details	
[Md.39] In speed limit flag	• If the speed exceeds the "[Pr.8] Speed limit value" ("[Pr.31] JOG speed limit value" at JOG operation control) due to a speed change or override, the speed limit functions, and the in speed limit flag turns ON. • When the speed drops to less than "[Pr.8] Speed limit value" ("[Pr.31] JOG speed limit value" at JOG operation control), or when the axis stops, the in speed limit flag turns OFF. Refresh cycle: Immediate	
[Md.40] In speed change processing flag	• The speed change process flag turns ON when the speed is changed during positioning control. • After the speed change process is completed or when deceleration starts with the stop signal during the speed change process, the in speed change process flag turns OFF. Refresh cycle: Immediate	
[Md.41] Special start repetition counter	• This area stores the remaining number of repetitions during "repetitions" specific to special starting. • The count is decremented by one (-1) at the loop end. • The control comes out of the loop when the count reaches "0". • This area stores "0" within an infinite loop. Refresh cycle: Immediate	
[Md.42] Control system repetition counter	• This area stores the remaining number of repetitions during "repetitions" specific to control system. • The count is decremented by one (-1) at the loop start. • The loop is terminated with the positioning data of the control method "LEND", after the counter becomes "0". Refresh cycle: Immediate	
[Md.43] Start data pointer being executed	• This area stores a point No. (1 to 50) attached to the start data currently being executed. • This area stores "0" after completion of a positioning operation. Refresh cycle: Immediate	
[Md.44] Positioning data No. being executed	• This area stores a positioning data No. attached to the positioning data currently being executed. • This area stores "0" when the JOG/inching operation is executed. Refresh cycle: Immediate	
[Md.45] Block No. being executed	• When the operation is controlled by "block start data", this area stores a block number (7000 to 7004) attached to the block currently being executed. • At other times, this area stores "0". Refresh cycle: At start	

	Reading the monitor value	Default value	Buffer memory address	
			QD77MS2 QD77MS4	QD77MS16
	■ Monitoring is carried out with a decimal display. 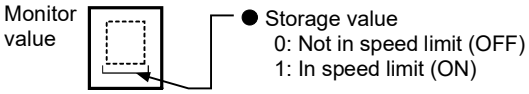	0	830+100n	2430+100n
	■ Monitoring is carried out with a decimal display. 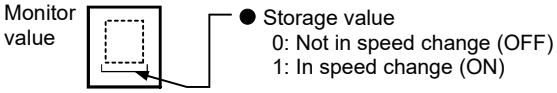	0	831+100n	2431+100n
	■ Monitoring is carried out with a decimal display. 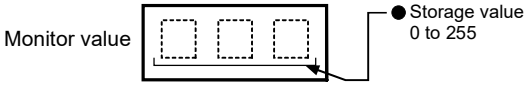	0	832+100n	2432+100n
	■ Monitoring is carried out with a hexadecimal display. 	0000H	833+100n	2433+100n
	■ Monitoring is carried out with a decimal display. 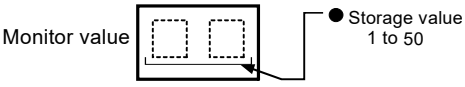	0	834+100n	2434+100n
	■ Monitoring is carried out with a decimal display. 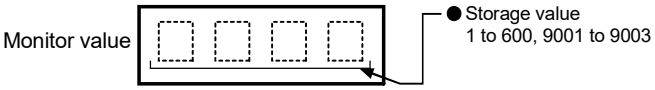	0	835+100n	2435+100n
	■ Monitoring is carried out with a decimal display. 	0	836+100n	2436+100n

n: Axis No.-1

Storage item	Storage details	
[Md.46] Last executed positioning data No.	• This area stores the positioning data No. attached to the positioning data that was executed last time. • The value is retained until a new positioning operation is executed. • This area stores "0" when the JOG/inching operation is executed. Refresh cycle: Immediate	
[Md.47] Positioning data being executed	• The addresses shown to the right store details of the positioning data currently being executed (positioning data No. given by [Md.44]). Refresh cycle: Immediate	
[Md.48] Deceleration start flag	• "1" is stored when the constant speed status or acceleration status switches to the deceleration status during position control whose operation pattern is "Positioning complete". • "0" is stored at the next operation start or manual pulse generator operation enable. Refresh cycle: Immediate [POINT] This parameter is possible to monitor when "[Cd.41] Deceleration start flag valid" is valid.	

<table>
<tr><th rowspan="2">Reading the monitor value</th><th rowspan="2">Default value</th><th colspan="2">Buffer memory address</th></tr>
<tr><th>QD77MS2
QD77MS4</th><th>QD77MS16</th></tr>
<tr><td>■ Monitoring is carried out with a decimal display.
 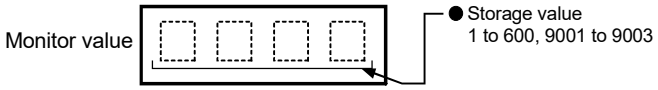
</td><td>0</td><td>837+100n</td><td>2437+100n</td></tr>
<tr><td>Information is stored in the following addresses:
<table><tr><th colspan="2">Stored address
(Monitor value)</th><th rowspan="2">Stored item</th><th colspan="2">Reference</th></tr><tr><th>QD77MS2
QD77MS4</th><th>QD77MS16</th><th>QD77MS2
QD77MS4</th><th>QD77MS16</th></tr><tr><td>838+100n</td><td>2438+100n</td><td>Positioning identifier</td><td>[Da.1] to [Da.5]</td><td>[Da.1] to [Da.4]</td></tr><tr><td>839+100n</td><td>2439+100n</td><td>M code /Condition data No./Number of LOOP to LEND repetitions</td><td>[Da.10]</td><td>[Da.10]</td></tr><tr><td>840+100n</td><td>2440+100n</td><td>Dwell time /JUMP destination positioning data No.</td><td>[Da.9]</td><td>[Da.9]</td></tr><tr><td>—</td><td>2441+100n</td><td>Axis to be interpolated</td><td>—</td><td>[Da.20] to [Da.22]</td></tr><tr><td>842+100n</td><td>2442+100n</td><td rowspan="2">Command speed</td><td rowspan="2">[Da.8]</td><td rowspan="2">[Da.8]</td></tr><tr><td>843+100n</td><td>2443+100n</td></tr><tr><td>844+100n</td><td>2444+100n</td><td rowspan="2">Positioning address</td><td rowspan="2">[Da.6]</td><td rowspan="2">[Da.6]</td></tr><tr><td>845+100n</td><td>2445+100n</td></tr><tr><td>846+100n</td><td>2446+100n</td><td rowspan="2">Arc address</td><td rowspan="2">[Da.7]</td><td rowspan="2">[Da.7]</td></tr><tr><td>847+100n</td><td>2447+100n</td></tr></table></td><td>0</td><td>838+100n
to
847+100n</td><td>2438+100n
to
2447+100n</td></tr>
<tr><td>■ Monitoring is carried out with a decimal display.
 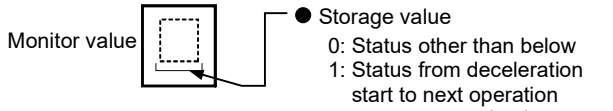
</td><td>0</td><td>899+100n</td><td>2499+100n</td></tr>
</table>

n: Axis No.-1

Storage item	Storage details	
[Md.100] HPR re-travel value	• This area stores the travel distance during the HPR travel to the zero point that was executed last time. "0" is stored at machine HPR start. For setting units Example) mm (Buffer memory × 0.1) μm Refresh cycle: At HPR re-movement	
[Md.101] Actual position value	• This area stores the current value (command position value – deviation counter droop pulses). Example) mm (Buffer memory × 0.1) μm Refresh cycle: Operation cycle	
[Md.102] Deviation counter value	• This area stores the droop pulse. (Buffer memory details) PLS Refresh cycle: Operation cycle	
[Md.103] Motor rotation speed	• This area stores the motor speed updated in real time. (Buffer memory × 0.1) r/min ＊1 ＊1: The unit is mm/s at linear servo use. Refresh cycle: Operation cycle	
[Md.104] Motor current value	• This area stores the present motor current value of the motor. (Buffer memory × 0.1) % Refresh cycle: Operation cycle	
[Md.106] Servo amplifier software No.	• This area stores the software No. of the servo amplifier used. • This area is update when the control power of the servo amplifier is turned ON. Refresh cycle: Servo amplifier's power supply ON	

	Reading the monitor value	Default value	Buffer memory address	
			QD77MS2 QD77MS4	QD77MS16
	■ Monitoring is carried out with a hexadecimal display. 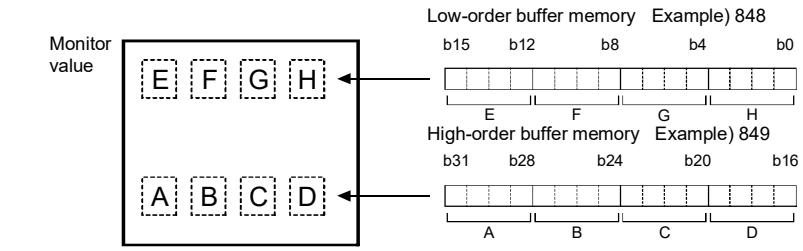	0000H	848+100n 849+100n	2448+100n 2449+100n
	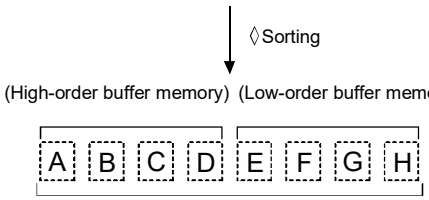	0000H	850+100n 851+100n	2450+100n 2451+100n
	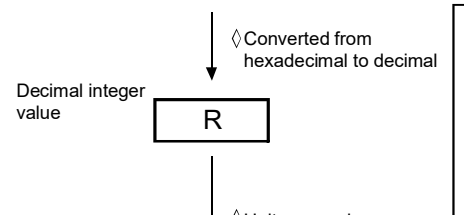 ● Unit conversion table (Md.100 Md.101) m / Unit -1 / μm -5 / inch -5 / degree 0 / PLS	0000H	852+100n 853+100n	2452+100n 2453+100n
	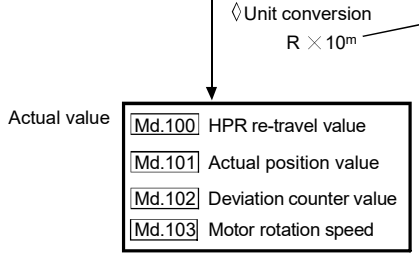 ● Unit conversion table (Md.102) m / Unit 0 / PLS ● Unit conversion table (Md.103) m / Unit -1 / r/min ※1	0000H	854+100n 855+100n	2454+100n 2455+100n
	■ Monitoring is carried out with a decimal display. 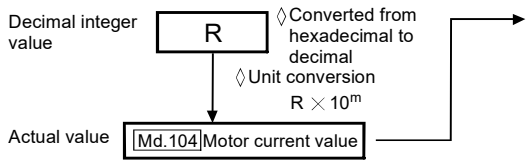 ● Unit conversion table (Md.104) m / Unit -1 / %	0	856+100n	2456+100n
	■ Monitoring is carried out with a hexadecimal display. 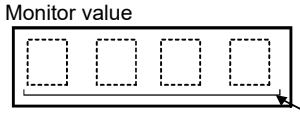 Example) -B35W200␣A0␣ Address / Monitor value / Stored value 864 422D - B 865 3533 3 5 866 3257 W 2 867 3030 0 0 868 4120 SPACE A 869 2030 0 SPACE	0	864+100n to 869+100n	2464+100n to 2469+100n

n: Axis No.-1

Storage item	Storage details	
[Md.107] Parameter error No.	• When a servo parameter error occurs, the area that corresponds to the parameter number affected by the error comes ON. • When the "[Cd.5] Axis error reset" (axis control data) is set to ON after remove the error factor of servo amplifier side, the servo alarm is cleared (set to 0). Refresh cycle: Immediate	

<table>
<tr><th rowspan="2">Reading the monitor value</th><th rowspan="2">Default value</th><th colspan="2">Buffer memory address</th></tr>
<tr><th>QD77MS2
QD77MS4</th><th>QD77MS16</th></tr>
<tr><td>■ Monitoring is carried out with a decimal display.
Monitor value 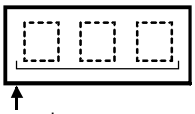
● Storage value
• When the SSCNET setting is SSCNETⅢ/H and MR-J5(W)-B is used
<table>
<tr><th>Storage value</th><th>Parameter No.</th></tr>
<tr><td>1 to 48</td><td>PA01 to PA48</td></tr>
<tr><td>257 to 355</td><td>PB01 to PB99</td></tr>
<tr><td>513 to 611</td><td>PC01 to PC99</td></tr>
<tr><td>769 to 867</td><td>PD01 to PD99</td></tr>
<tr><td>1025 to 1123</td><td>PE01 to PE99</td></tr>
<tr><td>1281 to 1379</td><td>PF01 to PF99</td></tr>
<tr><td>1793 to 1891</td><td>Po01 to Po99</td></tr>
<tr><td>2561 to 2659</td><td>PS01 to PS99</td></tr>
<tr><td>2817 to 2915</td><td>PL01 to PL99</td></tr>
</table>
• When the SSCNET setting is SSCNETⅢ/H and MR-J4(W)-B is used
<table>
<tr><th>Storage value</th><th>Parameter No.</th></tr>
<tr><td>1 to 64</td><td>PA01 to PA64</td></tr>
<tr><td>64 to 128</td><td>PB01 to PB64</td></tr>
<tr><td>129 to 192</td><td>PC01 to PC64</td></tr>
<tr><td>193 to 256</td><td>PD01 to PD64</td></tr>
<tr><td>257 to 320</td><td>PE01 to PE64</td></tr>
<tr><td>321 to 384</td><td>PF01 to PF64</td></tr>
<tr><td>385 to 448</td><td>Po01 to Po64</td></tr>
<tr><td>449 to 512</td><td>PS01 to PS64</td></tr>
<tr><td>513 to 576</td><td>PL01 to PL64</td></tr>
</table>
• When the SSCNET setting is SSCNETⅢ and MR-J3(W)-B is used
<table>
<tr><th>Storage value</th><th>Parameter No.</th></tr>
<tr><td>1 to 18</td><td>PA01 to PA18</td></tr>
<tr><td>19 to 63</td><td>PB01 to PB45</td></tr>
<tr><td>64 to 95</td><td>PC01 to PC32</td></tr>
<tr><td>96 to 127</td><td>PD01 to PD32</td></tr>
<tr><td>128 to 167</td><td>PE01 to PE40</td></tr>
<tr><td>168 to 183</td><td>PF01 to PF16</td></tr>
<tr><td>184 to 199</td><td>Po01 to Po16</td></tr>
<tr><td>200 to 231</td><td>PS01 to PS32</td></tr>
<tr><td>232</td><td>PA19</td></tr>
</table></td><td>0</td><td>870+100n</td><td>2470+100n</td></tr>
</table>

n: Axis No.-1

Storage item	Storage details	
[Md.108] Servo status	This area stores the servo status. • Zero point pass Turns ON if the zero point of the encoder has been passed even once. • Zero speed Turns ON when the motor speed is lower than the servo parameter "zero speed." • Speed limit Turns ON during the speed limit in torque control mode. • PID control Turns ON when the servo amplifier is PID control. • READY ON Indicates the ready ON/OFF. • Servo ON Indicates the servo ON/OFF. • Control mode Indicates the control mode of the servo amplifier. • Gain switching Turns ON during the gain switching. • Fully closed loop control switching Turns ON during the fully closed loop control. • Servo alarm Turns ON during the servo alarm. • In-position The dwell pulse turns ON within the servo parameter "in-position". • Torque limit Turns ON when the servo amplifier is having the torque restricted. • Absolute position lost Turns ON when the servo amplifier is lost the absolute position. • Servo warning Turns ON during the servo warning. Refresh cycle: Operation cycle	

<table>
<tr><th rowspan="2">Reading the monitor value</th><th rowspan="2">Default value</th><th colspan="2">Buffer memory address</th></tr>
<tr><th>QD77MS2
QD77MS4</th><th>QD77MS16</th></tr>
<tr><td>■ Monitoring is carried out with a hexadecimal display.
 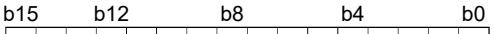

<table><tr><th colspan="2">Stored items</th><th>Meaning</th></tr><tr><td>b0</td><td>Zero point pass</td><td rowspan="4">0: OFF
1: ON</td></tr><tr><td>b3</td><td>Zero speed</td></tr><tr><td>b4</td><td>Speed limit</td></tr><tr><td>b8</td><td>PID control</td></tr></table></td><td>0000H</td><td>876+100n</td><td>2476+100n</td></tr>
<tr><td>■ Monitoring is carried out with a hexadecimal display.
 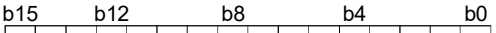

<table><tr><th colspan="2">Stored items</th><th>Meaning</th></tr><tr><td>b0</td><td>READY ON</td><td rowspan="10">0: OFF
1: ON</td></tr><tr><td>b1</td><td>Servo ON</td></tr><tr><td>b2
b3</td><td>Control mode*</td></tr><tr><td>b4</td><td>Gain switching</td></tr><tr><td>b5</td><td>Fully closed loop control switching</td></tr><tr><td>b7</td><td>Servo alarm</td></tr><tr><td>b12</td><td>In-position</td></tr><tr><td>b13</td><td>Torque limit</td></tr><tr><td>b14</td><td>Absolute position lost</td></tr><tr><td>b15</td><td>Servo warning</td></tr></table>*: Control mode
<table><tr><th>b2</th><th>b3</th><th>Control mode</th></tr><tr><td>0</td><td>0</td><td>Position control mode</td></tr><tr><td>1</td><td>0</td><td>Speed control mode</td></tr><tr><td>0</td><td>1</td><td>Torque control mode</td></tr></table>[POINT]
(1) When the forced stop of controller and servo amplifier occurs, the servo warning is turned ON. When the forced stop is reset, the servo warning is turned OFF.
(2) Confirm the status during continuous operation to torque control mode with "[Md.125] Servo status3".</td><td>0000H</td><td>877+100n</td><td>2477+100n</td></tr>
</table>

n: Axis No.-1

Storage item	Storage details	
[Md.109] Regenerative load ratio/ Optional data monitor output 1	• The rate of regenerative power to the allowable regenerative power is indicated as a percentage. • When the regenerative option is used, the rate to the allowable regenerative power of the option is indicated. (Buffer memory) % • This area stores the content set in "[Pr.91] Optional data monitor: Data type setting 1" at optional data monitor data type setting. Refresh cycle: Operation cycle	
[Md.110] Effective load torque/ Optional data monitor output 2	• The continuous effective load current is indicated. • The effective value for the past 15 seconds is indicated as a percentage, rated current being 100%. (Buffer memory) % • This area stores the content set in "[Pr.92] Optional data monitor: Data type setting 2" at optional data monitor data type setting. Refresh cycle: Operation cycle	
[Md.111] Peak torque ratio/ Optional data monitor output 3	• The maximum torque is indicated. (Holding value) • The peak values for the past 15 seconds are indicated, rated torque being 100%. (Buffer memory) % • This area stores the content set in "[Pr.93] Optional data monitor: Data type setting 3" at optional data monitor data type setting. Refresh cycle: Operation cycle	
[Md.112] Optional data monitor output 4	• This area stores the content set in "[Pr.94] Optional data monitor: Data type setting 4" at optional data monitor data type setting. ("0" is stored when the optional data monitor data type is not set.) Refresh cycle: Operation cycle	
[Md.113] Semi/Fully closed loop status	• The switching status of semi closed loop control/fully closed loop control is indicated. Refresh cycle: Operation cycle	

	Reading the monitor value	Default value	Buffer memory address	
			QD77MS2 QD77MS4	QD77MS16
	■ Monitoring is carried out with a decimal display. 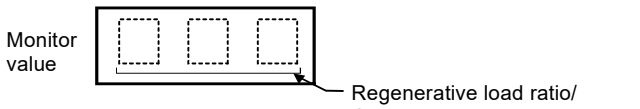 	0	878+100n	2478+100n
	■ Monitoring is carried out with a decimal display. 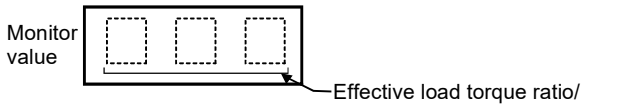 	0	879+100n	2479+100n
	■ Monitoring is carried out with a decimal display. 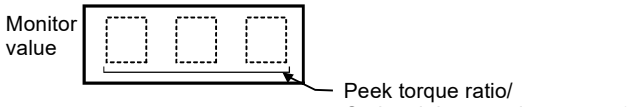 	0	880+100n	2480+100n
	■ Monitoring is carried out with a decimal display. 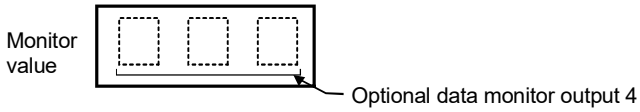 	0	881+100n	2481+100n
	■ Monitoring is carried out with a decimal display. 	0	887+100n	2487+100n

n: Axis No.-1

Storage item	Storage details	
[Md.114] Servo alarm	• This area stores the servo alarm code and servo warning code displayed in LED of servo amplifier. • When the "[Cd.5] Axis error reset" (axis control data) is set to ON after remove the error factor of servo amplifier side, the servo alarm is cleared (set to 0). Refresh cycle: Immediate	
[Md.116] Encoder option information	• The option information of encoder is indicated. Refresh cycle: Servo amplifier's power supply ON	

<table>
<tr><th rowspan="2">Reading the monitor value</th><th rowspan="2">Default value</th><th colspan="2">Buffer memory address</th></tr>
<tr><th>QD77MS2
QD77MS4</th><th>QD77MS16</th></tr>
<tr><td>■ Monitoring is carried out with a hexadecimal display.
• When SSCNET setting is SSCNET Ⅲ/H
LED display of MR-J5(W)-B
Monitor value
LED display of MR-J4(W)-B/ MR-JE-B(F)
Monitor value (0)
• When SSCNET setting is SSCNET Ⅲ
LED display of MR-J3(W)-B
Monitor value (0 0)</td><td>0000H</td><td>888+100n</td><td>2488+100n</td></tr>
<tr><td>■ Monitoring is carried out with a hexadecimal display.
b15 b12 b8 b4 b0
b3: ABS/INC mode distinction for magnetism type encoder*
0: INC mode
1: ABS mode
b6: Connecting to single-revolution ABS encoder*
0: Multi-revolution ABS/INC
1: Single-revolution ABS
b7: Connecting to magnetism type encoder*
0: No connection
1: Magnetism type encoder
b8: Compatible with continuous operation to torque control
0: Incompatible
1: Compatible
b9: Compatible with scale measurement mode
0: Incompatible
1: Compatible
*: Servo amplifier compatible with direct drive motor use
(Refer to the instruction manual or manual of each servo amplifier for details.)</td><td>0000H</td><td>890+100n</td><td>2490+100n</td></tr>
</table>

n: Axis No.-1

Storage item	Storage details	
[Md.120] Reverse torque limit stored value	"[Pr.17] Torque limit setting value", "[Cd.101] Torque output setting value", "[Cd.113] New reverse torque value", or "[Pr.54] HPR torque limit value" is stored. • At the positioning start/JOG operation start/ manual pulse generator operation : "[Pr.17] Torque limit setting value" or "[Cd.101] Torque output setting value" is stored. • When a value is set in "[Cd.22] New torque value/forward new torque value" or "[Cd.113] New reverse torque value" during operation. : "[Cd.22] New torque value/forward new torque value" is stored when "0" is set in "[Cd.112] Torque change function switching request". "[Cd.113] New reverse torque value" is stored when "1" is set in "[Cd.112] Torque change function switching request". • At the HPR : "[Pr.17] Torque limit setting value" or "[Cd.101] Torque output setting value" is stored. However, "[Pr.54] HPR torque limit value" is stored after the speed reaches "[Pr.47] Creep speed". Refresh cycle: Immediate	
[Md.122] Speed during command	• This area stores the command speed during speed control mode. • This area stores the command speed during continuous operation to torque control mode. • "0" is stored other than during speed control mode or continuous operation to torque control mode. Refresh cycle: Operation cycle (Speed control mode and continuous operation to torque control mode only)	
[Md.123] Torque during command	• This area stores the command torque during torque control mode. (Buffer memory × 0.1)% • This area stores the command torque during continuous operation to torque control mode. • "0" is stored other than during torque control mode or continuous operation to torque control mode. Refresh cycle: Operation cycle (Torque control mode and continuous operation to torque control mode only)	

<table>
<tr><th rowspan="2"></th><th rowspan="2">Reading the monitor value</th><th rowspan="2">Default value</th><th colspan="2">Buffer memory address</th></tr>
<tr><th>QD77MS2
QD77MS4</th><th>QD77MS16</th></tr>
<tr><td></td><td>■ Monitoring is carried out with a decimal display.
 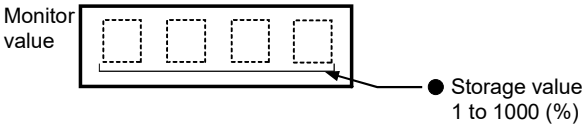
</td><td>0</td><td>891+100n</td><td>2491+100n</td></tr>
<tr><td rowspan="2"></td><td rowspan="2">■ Monitoring is carried out with a decimal display.
 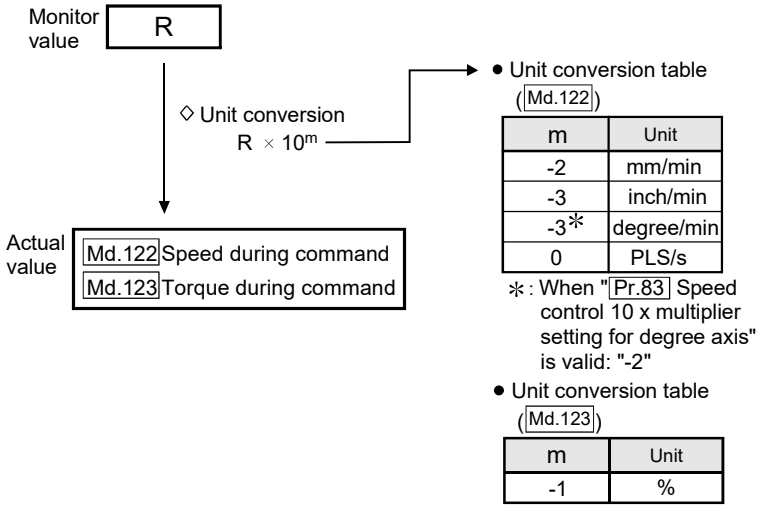
</td><td>0</td><td>892+100n
893+100n</td><td>2492+100n
2493+100n</td></tr>
<tr><td>0</td><td>894+100n</td><td>2494+100n</td></tr>
</table>

n: Axis No.-1

Storage item	Storage details	
[Md.124] Control mode switching status	• This area stores the switching status of control mode. Refresh cycle: Operation cycle	
[Md.125] Servo status3	• This area stores the servo status. • Continuous operation to torque control mode Turn ON when the continuous operation to torque control mode. Refresh cycle: Operation cycle	
[Md.126] Servo status4	• This area stores the servo status. • Magnetic pole detection completion flag Turn ON when the magnetic pole detection is completed. Refresh cycle: Operation cycle	
[Md.127] Servo status5	• This area stores the servo status. • Gain switching 2 Turn ON during gain switching 2. Refresh cycle: Operation cycle	
[Md.500] Servo status7	• This area stores the servo status 7. Refresh cycle: Operation cycle	
[Md.502] Driver operation alarm number	• This area stores the driver operation alarm number. Refresh cycle: Immediate	

	Reading the monitor value	Default value	Buffer memory address	
			QD77MS2 QD77MS4	QD77MS16
	■ Monitoring is carried out with a decimal display. 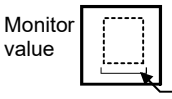 ● Control mode switching status 0: Not during control mode switching 1: Position control mode - continuous operation to torque control mode, speed control mode - continuous operation to torque control mode switching 2: Waiting for the completion of control mode switching condition	0	895+100n	2495+100n
	■ Monitoring is carried out with a hexadecimal display. 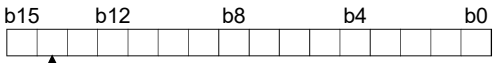 b14: Continuous operation to torque control mode — 0: OFF, 1: ON	0000H	858+100n	2458+100n
	■ Monitoring is carried out with a hexadecimal display. 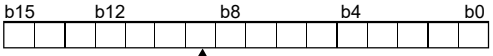 b9: Magnetic pole detection completion flag — 0: OFF, 1: ON	0000H	859+100n	2459+100n
	■ Monitoring is carried out with a hexadecimal display. 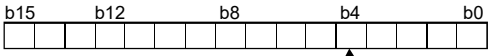 b4: Gain switching 2 — 0: OFF, 1: ON	0000H	860+100n	2460+100n
	■ Monitoring is carried out with a hexadecimal display. 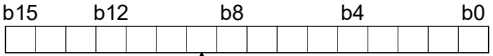 b9: Driver operation alarm — 0: OFF, 1: ON	0000H	59300+100n	
	■ Monitoring is carried out with a hexadecimal display. 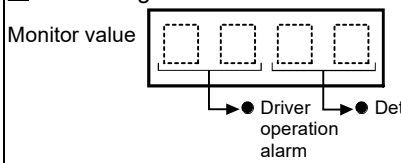 Example) When the driver operation alarm is "10H" and the detailed number is "23H", "1023H" is displayed.	0000H	59302+100n	

n: Axis No.-1

5.7 List of control data

The setting items of the control data are explained in this section.

• Guide to buffer memory address

In the buffer memory address, "n" in "4303+100n", etc. indicates a value corresponding to axis No. such as the following table.

Axis No.	n	Axis No.	n	Axis No.	n	Axis No.	n
1	0	5	4	9	8	13	12
2	1	6	5	10	9	14	13
3	2	7	6	11	10	15	14
4	3	8	7	12	11	16	15

(Note-1): Calculate as follows for the buffer memory address corresponding to each axis.

(Example) For axis No. 16

4303+100n ([Cd.6] Restart command)=4303+100×15=5803

(Note-2): The range from axis No.1 to 2 (n=0 to 1) is valid in the QD77MS2.

(Note-3): The range from axis No.1 to 4 (n=0 to 3) is valid in the QD77MS4.

5.7.1 System control data

Setting item	Setting details	
[Cd.1] Flash ROM write request	• Writes not only "positioning data (No.1 to 600)" and "block start data (No.7000 to 7004)" stored in the buffer memory/internal memory area, but also "parameters" and "servo parameters" to the flash ROM/internal memory (nonvolatile). Fetch cycle: 103[ms] [POINT] (1) Do not turn the power OFF or reset the PLC CPU while writing to the flash ROM. If the power is turned OFF or the PLC CPU is reset to forcibly end the process, the data backed up in the flash ROM will be lost. (2) Do not write the data to the buffer memory before writing to the flash ROM is completed. (3) The number of writes to the flash ROM with the sequence program is 25 max. while the power is turned ON. Writing to the flash ROM beyond 25 times will cause the error "Flash ROM write number error" (error code: 805). Refer to Section 16.4 "List of errors" for details. (4) Monitoring is the number of writes to the flash ROM after the power is switched ON by the "[Md.19] Number of write accesses to flash ROM".	
[Cd.2] Parameter initialization request	• Requests initialization of setting data. Refer to Section 14.2 for initialized setting data. Initialization: Resetting of setting data to default values Fetch cycle: 103[ms] Note: After completing the initialization of setting data, switch the power ON or reset the PLC CPU.	

	Setting value	Default value	Buffer memory address (common for all axes)	
			QD77MS2 QD77MS4	QD77MS16
	■ Set with a decimal. 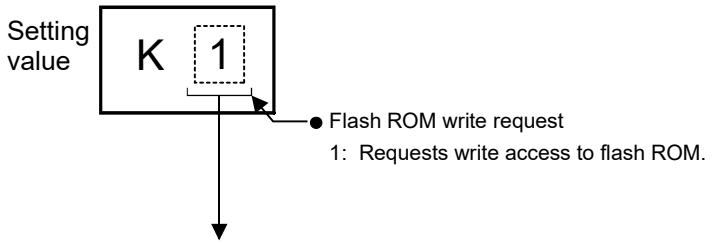 The Simple Motion module resets the value to "0" automatically when the write access completes. (This indicates the completion of write operation.)	0	1900	5900
	■ Set with a decimal. 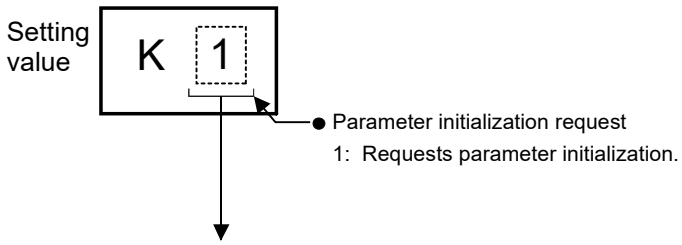 The Simple Motion module resets the value to "0" automatically when the initialization completes. (This indicates the completion of parameter initialization.)	0	1901	5901

Setting item	Setting details	
[Cd.41] Deceleration start flag valid	• Set whether "[Md.48] Deceleration start flag" is made valid or invalid. Fetch cycle: At PLC READY ON [POINT] The "[Cd.41] Deceleration start flag valid" become valid when the PLC READY signal [Y0] turns from OFF to ON.	
[Cd.42] Stop command processing for deceleration stop selection	• Set the stop command processing for deceleration stop function (deceleration curve re-processing/deceleration curve continuation). Fetch cycle: At deceleration stop causes occurrence	

	Setting value	Default value	Buffer memory address (common for all axes)	
			QD77MS2 QD77MS4	QD77MS16
	■ Set with a decimal. Setting value K □ ● Deceleration start flag valid 0: Deceleration start flag invalid 1: Deceleration start flag valid	0	1905	5905
	■ Set with a decimal. Setting value K □ ● Stop command processing for deceleration stop selection 0: Deceleration curve re-processing 1: Deceleration curve continuation	0	1907	5907

Setting item	Setting details	
[Cd.44] External input signal operation device (Axis 1 to 16)	• Operate the stop signal input status of QD77MS when "1" is set in "[Pr.80] External input signal selection". • Operate the external input signal status (Upper/lower limit signal, proximity dog signal, stop signal) of QD77MS when "2" is set in "[Pr.80] External input signal selection". Fetch cycle: Operation cycle	

Setting value	Default value	Buffer memory address (common for all axes)	
		QD77MS2 QD77MS4	QD77MS16
■ Set with a hexadecimal.	0000H	1928	5928 to 5931

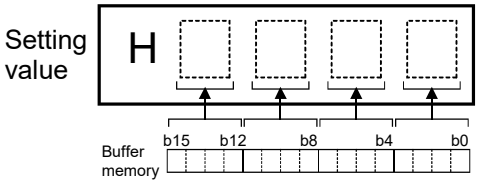

●QD77MS2/QD77MS4

Buffer memory		Setting items	Default value	Meaning
1928	b0	Axis 1 Upper limit signal (FLS)	0	"Pr.22 Input signal logic selection" is negative logic 0: OFF 1: ON "Pr.22 Input signal logic selection" is positive logic 0: ON 1: OFF
	b1	Axis 1 Lower limit signal (RLS)	0	
	b2	Axis 1 Proximity dog signal (DOG)	0	
	b3	Axis 1 STOP signal (STOP)	0	
	b4	Axis 2 Upper limit signal (FLS)	0	
	b5	Axis 2 Lower limit signal (RLS)	0	
	b6	Axis 2 Proximity dog signal (DOG)	0	
	b7	Axis 2 STOP signal (STOP)	0	
	b8	Axis 3 Upper limit signal (FLS)	0	
	b9	Axis 3 Lower limit signal (RLS)	0	
	b10	Axis 3 Proximity dog signal (DOG)	0	
	b11	Axis 3 STOP signal (STOP)	0	
	b12	Axis 4 Upper limit signal (FLS)	0	
	b13	Axis 4 Lower limit signal (RLS)	0	
	b14	Axis 4 Proximity dog signal (DOG)	0	
	b15	Axis 4 STOP signal (STOP)	0	

●QD77MS16

Buffer memory		Setting items	Default value	Meaning
5928	b0	Axis 1 Upper limit signal (FLS)	0	"Pr.22 Input signal logic selection" is negative logic 0: OFF 1: ON "Pr.22 Input signal logic selection" is positive logic 0: ON 1: OFF
	b1	Axis 1 Lower limit signal (RLS)	0	
	b2	Axis 1 Proximity dog signal (DOG)	0	
	b3	Axis 1 STOP signal (STOP)	0	
	b4	Axis 2 Upper limit signal (FLS)	0	
	b5	Axis 2 Lower limit signal (RLS)	0	
	b6	Axis 2 Proximity dog signal (DOG)	0	
	b7	Axis 2 STOP signal (STOP)	0	
	b8	Axis 3 Upper limit signal (FLS)	0	
	b9	Axis 3 Lower limit signal (RLS)	0	
	b10	Axis 3 Proximity dog signal (DOG)	0	
	b11	Axis 3 STOP signal (STOP)	0	
	b12	Axis 4 Upper limit signal (FLS)	0	
	b13	Axis 4 Lower limit signal (RLS)	0	
	b14	Axis 4 Proximity dog signal (DOG)	0	
	b15	Axis 4 STOP signal (STOP)	0	
5929	b0	Axis 5 Upper limit signal (FLS)	0	
	b1	Axis 5 Lower limit signal (RLS)	0	
	b2	Axis 5 Proximity dog signal (DOG)	0	
	b3	Axis 5 STOP signal (STOP)	0	
	b4	Axis 6 Upper limit signal (FLS)	0	
	b5	Axis 6 Lower limit signal (RLS)	0	
	b6	Axis 6 Proximity dog signal (DOG)	0	
	b7	Axis 6 STOP signal (STOP)	0	
	b8	Axis 7 Upper limit signal (FLS)	0	
	b9	Axis 7 Lower limit signal (RLS)	0	
	b10	Axis 7 Proximity dog signal (DOG)	0	
	b11	Axis 7 STOP signal (STOP)	0	
	b12	Axis 8 Upper limit signal (FLS)	0	
	b13	Axis 8 Lower limit signal (RLS)	0	
	b14	Axis 8 Proximity dog signal (DOG)	0	
	b15	Axis 8 STOP signal (STOP)	0	

Buffer memory		Setting items	Default value	Meaning
5930	b0	Axis 9 Upper limit signal (FLS)	0	"Pr.22 Input signal logic selection" is negative logic 0: OFF 1: ON "Pr.22 Input signal logic selection" is positive logic 0: ON 1: OFF
	b1	Axis 9 Lower limit signal (RLS)	0	
	b2	Axis 9 Proximity dog signal (DOG)	0	
	b3	Axis 9 STOP signal (STOP)	0	
	b4	Axis 10 Upper limit signal (FLS)	0	
	b5	Axis 10 Lower limit signal (RLS)	0	
	b6	Axis 10 Proximity dog signal (DOG)	0	
	b7	Axis 10 STOP signal (STOP)	0	
	b8	Axis 11 Upper limit signal (FLS)	0	
	b9	Axis 11 Lower limit signal (RLS)	0	
	b10	Axis 11 Proximity dog signal (DOG)	0	
	b11	Axis 11 STOP signal (STOP)	0	
	b12	Axis 12 Upper limit signal (FLS)	0	
	b13	Axis 12 Lower limit signal (RLS)	0	
	b14	Axis 12 Proximity dog signal (DOG)	0	
	b15	Axis 12 STOP signal (STOP)	0	
5931	b0	Axis 13 Upper limit signal (FLS)	0	
	b1	Axis 13 Lower limit signal (RLS)	0	
	b2	Axis 13 Proximity dog signal (DOG)	0	
	b3	Axis 13 STOP signal (STOP)	0	
	b4	Axis 14 Upper limit signal (FLS)	0	
	b5	Axis 14 Lower limit signal (RLS)	0	
	b6	Axis 14 Proximity dog signal (DOG)	0	
	b7	Axis 14 STOP signal (STOP)	0	
	b8	Axis 15 Upper limit signal (FLS)	0	
	b9	Axis 15 Lower limit signal (RLS)	0	
	b10	Axis 15 Proximity dog signal (DOG)	0	
	b11	Axis 15 STOP signal (STOP)	0	
	b12	Axis 16 Upper limit signal (FLS)	0	
	b13	Axis 16 Lower limit signal (RLS)	0	
	b14	Axis 16 Proximity dog signal (DOG)	0	
	b15	Axis 16 STOP signal (STOP)	0	

Setting item	Setting details	
[Cd.47] QD75MH initial value setting request	• Request to set the initial value of QD75MH in setting data. Refer to Section 14.14 for initialized setting data. Fetch cycle: 103[ms] Note: After completing the initialization of setting data, switch the power ON or reset the PLC CPU.	
[Cd.102] SSCNET control command	• Set the connect/disconnect command of SSCNET communication. Fetch cycle: 3.5[ms]	
[Cd.137] Amplifier-less operation mode switching request	• Set the switching request of the normal operation mode and amplifier-less operation mode. Fetch cycle: 3.5[ms]	
[Cd.158] Forced stop input	• Set the forced stop information. Fetch cycle: Operation cycle	

	Setting value	Default value	Buffer memory address (common for all axes)	
			QD77MS2 QD77MS4	QD77MS16
	■ Set with a decimal. Setting value 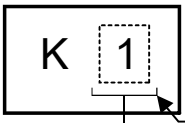 ● QD75MH initial value setting request 1: Requests QD75MH initial value setting. The Simple Motion module resets the value to "0" automatically after the initial value setting is completed. (Indicates that the initial value setting is completed.)	0	1909	5909
	■ Set with a decimal. Setting value 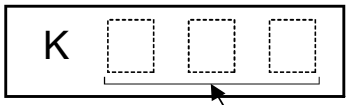 ● SSCNET control command 0 : No command Axis No.(Note-1) : Disconnect command of SSCNET communication (Axis No. to be disconnected) -2 : Execute command -10 : Connect command of SSCNET communication Except above setting : Invalid (Note-1): QD77MS2 : 1 to 2 QD77MS4 : 1 to 4 QD77MS16: 1 to 16	0	1932	5932
	■ Set with a hexadecimal. Setting value 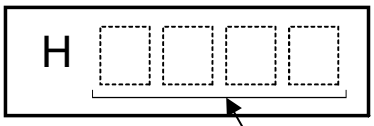 ● Amplifier-less operation mode switching request ABCDh: Change from normal operation mode to amplifier-less operation mode 0000h : Change from amplifier-less operation mode to normal operation mode	0000H	1926	5926
	■ Set with a hexadecimal. Setting value 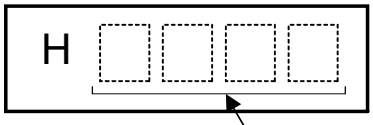 ● Forced stop input 0000h: Forced stop ON (Forced stop) 0001h: Forced stop OFF (Forced stop release)	0000H	1945	5945

5.7.2 Axis control data

Setting item	Setting details	
[Cd.3] Positioning start No.	• Set the positioning start No. (Only 1 to 600 for the Pre-reading start function. For details, refer to Section 13.7.7 "Pre-reading start function".) Fetch cycle: At start	
[Cd.4] Positioning starting point No.	• Set a "starting point No." (1 to 50) if block start data is used for positioning. (Handled as "1" if the value of other than 1 to 50 is set.) Fetch cycle: At start	
[Cd.5] Axis error reset	• Clears the axis error detection, axis error No., axis warning detection and axis warning No. • When the axis operation state of Simple Motion module is "in error occurrence", the error is cleared and the Simple Motion module is returned to the "waiting" state. • Clears the both of Simple Motion module errors and servo amplifier errors by axis error reset. (Some servo amplifier alarms cannot be reset even if error reset is requested. At the time, "0" is not stored in [Cd.5] by the Simple Motion module. It remains "1". Set "0" in [Cd.5] and then set "1" to execute the error reset again by user side. Refer to the instruction manual or manual of each servo amplifier for details.) Fetch cycle: 14.2[ms]	
[Cd.6] Restart command	• When positioning is stopped for any reason (when axis operation state is "stopped"), set "1" in [Cd.6]. Positioning will be carried out again from the stopped position to the end point of the stopped positioning data. Fetch cycle: 14.2[ms]	

	Setting value	Default value	Buffer memory address	
			QD77MS2 QD77MS4	QD77MS16
	■ Set with a decimal. Setting value 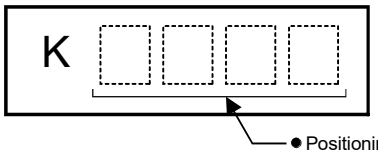 ● Positioning data No. • 1 to 600 : Positioning data No. • 7000 to7004 : Block start designation • 9001 : Machine HPR • 9002 : Fast-HPR • 9003 : Current value changing • 9004 : Simultaneous starting of multiple axes	0	1500+100n	4300+100n
	■ Set with a decimal. Setting value 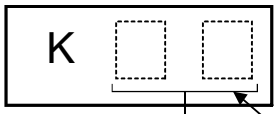 ● Positioning starting point No. 1 to 50 The Simple Motion module resets the value to "0" automatically when the continuous operation is interrupted.	0	1501+100n	4301+100n
	■ Set with a decimal. Setting value 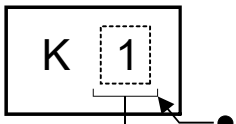 ● Error reset request 1: Axis error is reset. The Simple Motion module resets the value to "0" automatically after the axis error reset is completed. (Indicates that the axis error reset is completed.)	0	1502+100n	4302+100n
	■ Set with a decimal. Setting value 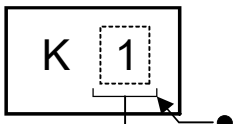 ● Restart command 1: Restarts The Simple Motion module resets the value to "0" automatically after restart acceptance is completed. (Indicates that the restart acceptance is completed.)	0	1503+100n	4303+100n

n: Axis No.-1

<table>
<tr><th>Setting item</th><th>Setting details</th><th></th></tr>
<tr><td>[Cd.7] M code OFF request</td><td>• The M code ON signal turns OFF.

Fetch cycle: Operation cycle</td><td></td></tr>
<tr><td>[Cd.8] External command valid</td><td>• Validates or invalidates external command signals.

Fetch cycle: At request by external command signal</td><td></td></tr>
<tr><td>[Cd.9] New position value</td><td>• When changing the "command position value" using the start No. "9003", use this data item to specify a new command position value.
• The setting value range differs according to the "[Pr.1] Unit setting".
<table><tr><th>[Pr.1] Unit setting</th><th>mm
(× 10^{-1} μm)</th><th>inch
(× 10^{-5} inch)</th><th>degree
(× 10^{-5} degree)</th><th>PLS
(PLS)</th></tr><tr><td>Setting range</td><td>-2147483648
to
2147483647</td><td>-2147483648
to
2147483647</td><td>0 to 35999999</td><td>-2147483648
to
2147483647</td></tr></table>
Fetch cycle: At change request</td><td></td></tr>
<tr><td>[Cd.10] New acceleration time value</td><td>• When changing the acceleration time during a speed change, use this data item to specify a new acceleration time.
<table><tr><th>[Cd.10] setting range (unit)</th></tr><tr><td>0 to 8388608 (ms)</td></tr></table>
Fetch cycle: At change request</td><td></td></tr>
<tr><td>[Cd.11] New deceleration time value</td><td>• When changing the deceleration time during a speed change, use this data item to specify a new deceleration time.
<table><tr><th>[Cd.11] setting range (unit)</th></tr><tr><td>0 to 8388608 (ms)</td></tr></table>
Fetch cycle: At change request</td><td></td></tr>
</table>

<table>
<tr><th rowspan="2"></th><th rowspan="2">Setting value</th><th rowspan="2">Default value</th><th colspan="2">Buffer memory address</th></tr>
<tr><th>QD77MS2
QD77MS4</th><th>QD77MS16</th></tr>
<tr><td></td><td>■ Set with a decimal.
Setting value
 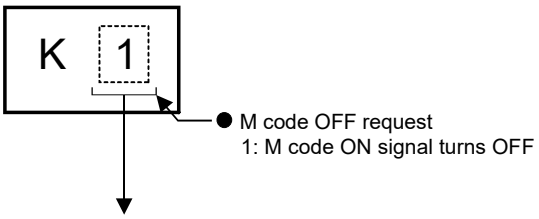

After the M code ON signal turns OFF, "0" is stored by the Simple Motion module automatically. (Indicates that the OFF request is completed.)</td><td>0</td><td>1504+100n</td><td>4304+100n</td></tr>
<tr><td></td><td>■ Set with a decimal.
Setting value
 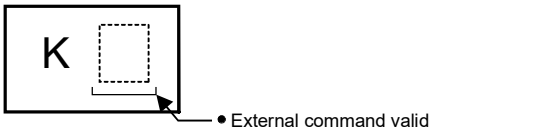
</td><td>0</td><td>1505+100n</td><td>4305+100n</td></tr>
<tr><td></td><td>■ Set with a decimal.
Actual value Cd.9 New position value
◇Conversion into an integer value
× 10m
●Unit conversion table (Cd.9)
Setting value (Decimal) R
<table><tr><th>m</th><th>Unit</th></tr><tr><td>1</td><td>μm</td></tr><tr><td>5</td><td>inch</td></tr><tr><td>5</td><td>degree</td></tr><tr><td>0</td><td>PLS</td></tr></table></td><td>0</td><td>1506+100n
1507+100n</td><td>4306+100n
4307+100n</td></tr>
<tr><td></td><td rowspan="2">■ Set with a decimal.
Setting value
Cd.10 New acceleration time value
Cd.11 New deceleration time value
Example: When the " Cd. 10 New acceleration time value" is set as "60000 ms", the buffer memory stores "60000".</td><td>0</td><td>1508+100n
1509+100n</td><td>4308+100n
4309+100n</td></tr>
<tr><td></td><td>0</td><td>1510+100n
1511+100n</td><td>4310+100n
4311+100n</td></tr>
</table>

n: Axis No.-1

<table>
<tr><th>Setting item</th><th>Setting details</th><th></th></tr>
<tr><td>[Cd.12] Acceleration/deceleration time change value during speed change, enable/disable</td><td>• Enables or disables modifications to the acceleration/deceleration time during a speed change.

Fetch cycle: At change request</td><td></td></tr>
<tr><td>[Cd.13] Positioning operation speed override</td><td>• To use the positioning operation speed override function, use this data item to specify an "override" value.
＊: For details of the override function, refer to Section 13.5.2 "Override function".

If the command speed is set to less than the minimum unit using the override function, the speed is raised to the minimum unit and the warning "Less than minimum speed" (warning code: 110) occurs.

Fetch cycle: Operation cycle</td><td></td></tr>
<tr><td>[Cd.14] New speed value</td><td>• When changing the speed, use this data item to specify a new speed.
• The operation halts if you specify "0".
• The setting value range differs according to the "[Pr.1] Unit setting".
<table><tr><td>[Pr.1] Unit setting</td><td>mm
(× 10^{-2} mm/min)</td><td>inch
(× 10^{-3} inch/min)</td><td>degree＊
(×10^{-3} degree/min)</td><td>PLS
(PLS/s)</td></tr><tr><td>Setting range</td><td>0 to 2000000000</td><td>0 to 2000000000</td><td>0 to 2000000000</td><td>0 to 1000000000</td></tr></table>＊: When "[Pr.83] Speed control 10 x multiplier setting for degree axis" is valid, this will be the setting range 0 to 2000000000 (× 10^{-2}degree/min).

Fetch cycle: At change request</td><td></td></tr>
<tr><td>[Cd.15] Speed change request</td><td>• After setting the "[Cd.14] New speed value", set this data item to "1" to execute the speed change (through validating the new speed value).

Fetch cycle: Operation cycle</td><td></td></tr>
</table>

	Setting value	Default value	Buffer memory address	
			QD77MS2 QD77MS4	QD77MS16
	■ Set with a decimal. 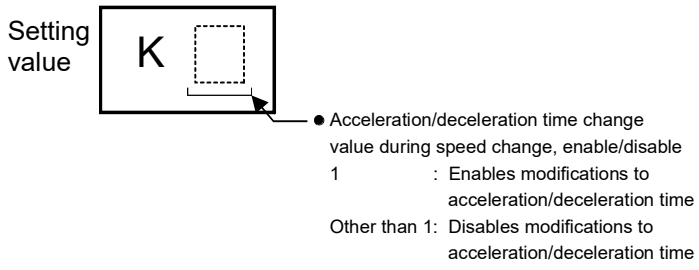	0	1512+100n	4312+100n
	■ Set with a decimal. 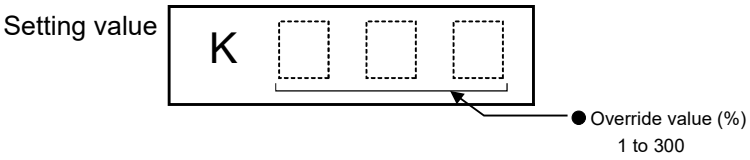	100	1513+100n	4313+100n
	■ Set with a decimal. 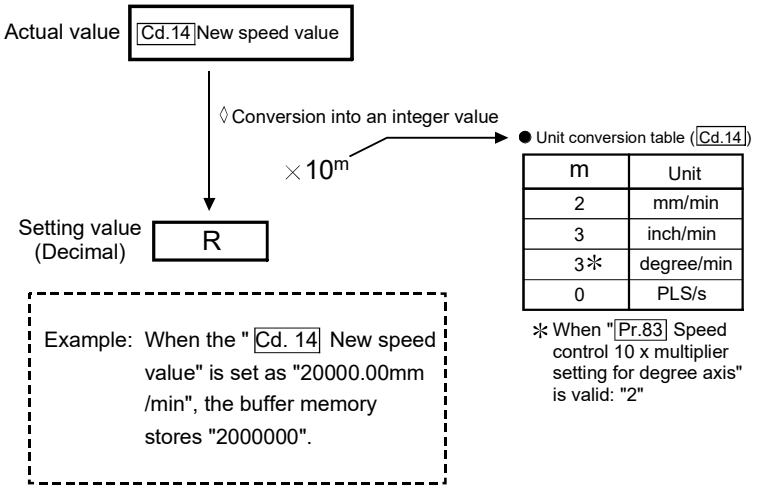	0	1514+100n 1515+100n	4314+100n 4315+100n
	■ Set with a decimal. 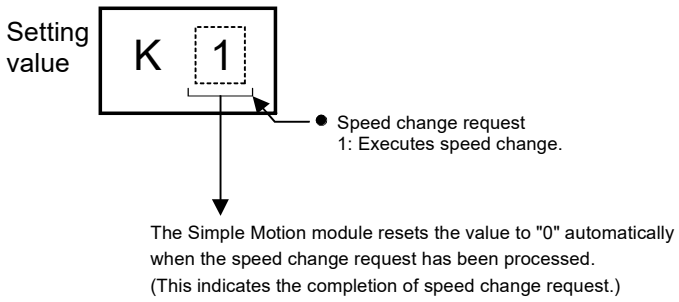	0	1516+100n	4316+100n

n: Axis No.-1

<table>
<tr><th>Setting item</th><th>Setting details</th><th></th></tr>
<tr><td>[Cd.16] Inching movement amount</td><td>
• Use this data item to set the amount of movement by inching.
• The machine performs a JOG operation if "0" is set.
• Set a value within the following range:
<table>
<tr><td>[Pr.1] Unit setting</td><td>mm
(× 10^{-1} μm)</td><td>inch
(× 10^{-5} inch)</td><td>degree
(× 10^{-5} degree)</td><td>PLS
(PLS)</td></tr>
<tr><td>Setting range</td><td>0 to 65535</td><td>0 to 65535</td><td>0 to 65535</td><td>0 to 65535</td></tr>
</table>
Fetch cycle: At start
</td><td></td></tr>
<tr><td>[Cd.17] JOG speed</td><td>
• Use this data item to set the JOG speed.
• The setting value range differs according to the "[Pr.1] Unit setting".
<table>
<tr><td>[Pr.1] Unit setting</td><td>mm
(× 10^{-2} mm/min)</td><td>inch
(× 10^{-3} inch/min)</td><td>degree＊
(×10^{-3} degree/min)</td><td>PLS
(PLS/s)</td></tr>
<tr><td>Setting range</td><td>1 to 2000000000</td><td>1 to 2000000000</td><td>1 to 2000000000</td><td>1 to 1000000000</td></tr>
</table>
＊: When "[Pr.83] Speed control 10 x multiplier setting for degree axis" is valid, this will be the setting range 1 to 2000000000 (× 10^{-2}degree/min).
Fetch cycle: At start
</td><td></td></tr>
<tr><td>[Cd.18] Interrupt request during continuous operation</td><td>
• To interrupt a continuous operation, set "1" to this data item.
• After processing the interruption request ("1"), the Simple Motion module automatically resets the value to "0".
Fetch cycle: Operation cycle
</td><td></td></tr>
</table>

<table>
<tr><th rowspan="2"></th><th rowspan="2">Setting value</th><th rowspan="2">Default value</th><th colspan="2">Buffer memory address</th></tr>
<tr><th>QD77MS2
QD77MS4</th><th>QD77MS16</th></tr>
<tr><td></td><td>■ Set with a decimal.
 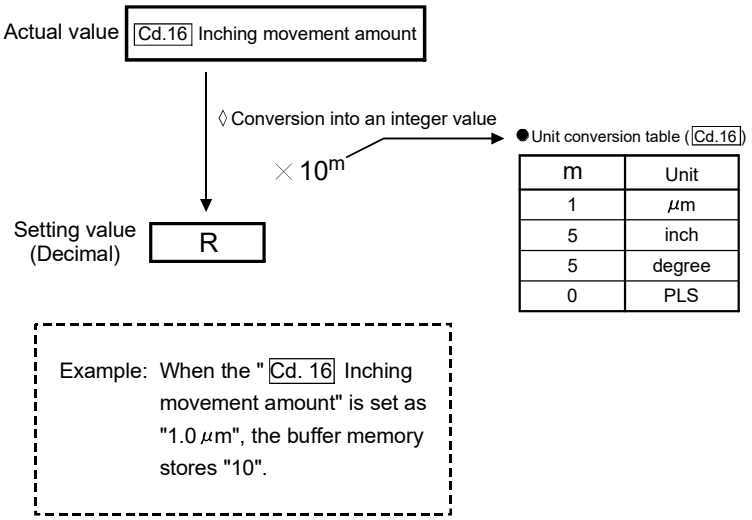

Example: When the "Cd. 16 Inching movement amount" is set as "1.0 μm", the buffer memory stores "10".</td><td>0</td><td>1517+100n</td><td>4317+100n</td></tr>
<tr><td></td><td>■ Set with a decimal.
 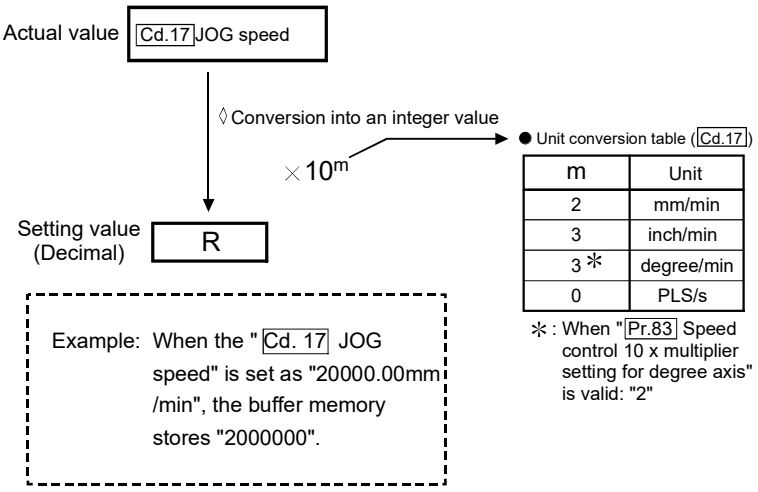

Example: When the "Cd. 17 JOG speed" is set as "20000.00mm /min", the buffer memory stores "2000000".
✻: When "Pr.83 Speed control 10 x multiplier setting for degree axis" is valid: "2"</td><td>0</td><td>1518+100n
1519+100n</td><td>4318+100n
4319+100n</td></tr>
<tr><td></td><td>■ Set with a decimal.
 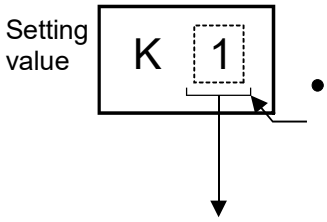

● Interruption request continuous operation
1: Interrupts continuous operation control or continuous path control.
The Simple Motion module resets the value to "0" automatically when the continuous control interruption request is processed.
(This indicates the completion of continuous operation interruption request.)</td><td>0</td><td>1520+100n</td><td>4320+100n</td></tr>
</table>

n: Axis No.-1

Setting item	Setting details	
[Cd.19] HPR request flag OFF request	• The sequence program can use this data item to forcibly turn the HPR request flag from ON to OFF. Fetch cycle: 14.2[ms] [POINT] This parameter is made valid when the increment system is valid.	
[Cd.20] Manual pulse generator 1 pulse input magnification	• This data item determines the factor by which the number of pulses from the manual pulse generator is magnified. • Value "0" : read as "1". • Value "10001 or more" or negative value : read as "10000". Fetch cycle: Operation cycle (At manual pulse generator enabled)	
[Cd.21] Manual pulse generator enable flag	• This data item enables or disables operations using a manual pulse generator. Fetch cycle: Operation cycle	
[Cd.22] New torque value/ forward new torque value	• When "0" is set to "[Cd.112] Torque change function switching request", a new torque limit value is set. (This value is set to the forward torque limit value and reverse torque limit value.) When "1" is set to "[Cd.112] Torque change function switching request", a new forward torque limit value is set. • Set a value within "0" to "[Pr.17] Torque limit setting value". Set a ratio against the rated torque in percentage unit. (The new torque value is invalid when "0" is set, and "[Pr.17] Torque limit setting value" or "[Cd.101] Torque output setting value" becomes valid. The range of torque change is 1 to "[Pr.17] Torque limit setting value".) Fetch cycle: Operation cycle	

	Setting value	Default value	Buffer memory address	
			QD77MS2 QD77MS4	QD77MS16
	■ Set with a decimal. 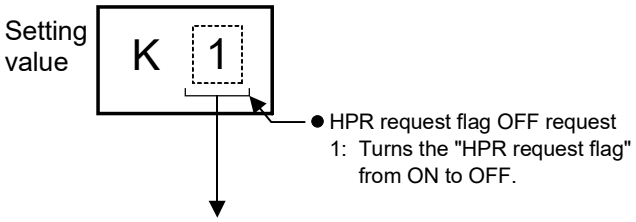 The Simple Motion module resets the value to "0" automatically when the HPR request flag is turned OFF. (This indicates the completion of HPR request flag OFF request.)	0	1521+100n	4321+100n
	■ Set with a decimal. 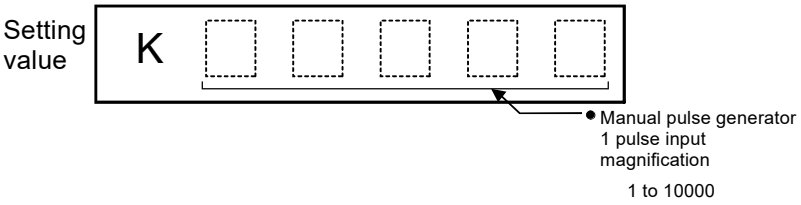 	1	1522+100n 1523+100n	4322+100n 4323+100n
	■ Set with a decimal. 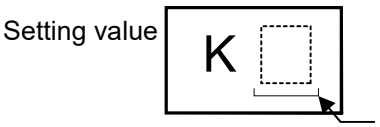 	0	1524+100n	4324+100n
	■ Set with a decimal. 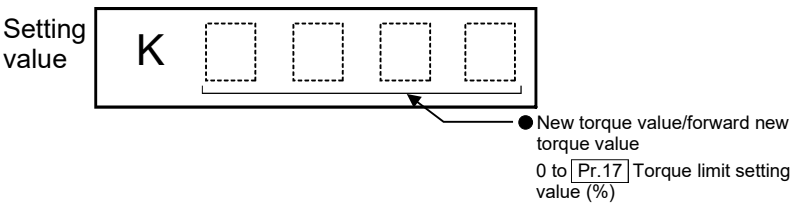 	0	1525+100n	4325+100n

n: Axis No.-1

<table>
<tr><th>Setting item</th><th>Setting details</th><th></th></tr>
<tr><td>[Cd.23] Speed-position switching control movement amount change register</td><td>
• During the speed control stage of the speed-position switching control (INC mode), it is possible to change the specification of the movement amount during the position control stage. For that, use this data item to specify a new movement amount.
• The new movement amount has to be set during the speed control stage of the speed-position switching control (INC mode).
• The value is reset to "0" when the next operation starts.
• Set a value within the following range:
<table>
<tr><td>[Pr.1] Unit setting</td><td>mm
(× 10^{-1} μm)</td><td>inch
(× 10^{-5} inch)</td><td>degree
(× 10^{-5} degree)</td><td>PLS
(PLS)</td></tr>
<tr><td>Setting range</td><td>0 to 2147483647</td><td>0 to 2147483647</td><td>0 to 2147483647</td><td>0 to 2147483647</td></tr>
</table>
Fetch cycle: At switching request
</td><td></td></tr>
<tr><td>[Cd.24] Speed-position switching enable flag</td><td>
• Set whether the switching signal set in "[Cd.45] Speed-position switching device selection" is enabled or not.

Fetch cycle: At switching request
</td><td></td></tr>
<tr><td>[Cd.25] Position-speed switching control speed change register</td><td>
• During the position control stage of the position-speed switching control, it is possible to change the specification of the speed during the speed control stage. For that, use this data item to specify a new speed.
• The new speed has to be set during the position control stage of the position-speed switching control.
• The value is reset to "0" when the next operation starts.
• The setting value range differs according to the "[Pr.1] Unit setting".
<table>
<tr><td>[Pr.1] Unit setting</td><td>mm
(× 10^{-2} mm/min)</td><td>inch
(× 10^{-3} inch/min)</td><td>degree＊
(× 10^{-3} degree/min)</td><td>PLS
(PLS/s)</td></tr>
<tr><td>Setting range</td><td>0 to 2000000000</td><td>0 to 2000000000</td><td>0 to 2000000000</td><td>0 to 1000000000</td></tr>
</table>
＊: When "[Pr.83] Speed control 10 x multiplier setting for degree axis" is valid, this will be the setting range 0 to 2000000000 (× 10^{-2}degree/min).

Fetch cycle: At switching request
</td><td></td></tr>
</table>

	Setting value	Default value	Buffer memory address	
			QD77MS2 QD77MS4	QD77MS16
	■ Set with a decimal. 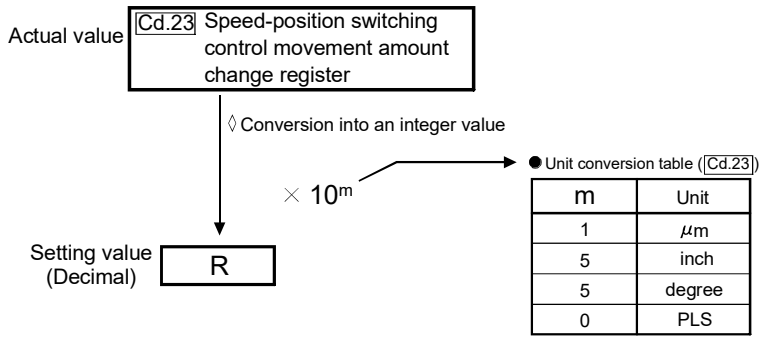 Example: If "Cd. 23 Speed-position switching control movement amount change register" is set as "20000.0 μm", the buffer memory stores "200000".	0	1526+100n 1527+100n	4326+100n 4327+100n
	■ Set with a decimal. 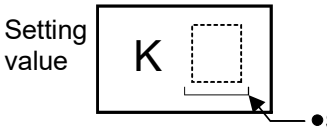 ●Speed-position switching enable flag 0: Speed control will not be taken over by position control even when the signal set in "Cd.45 Speed-position switching device selection" comes ON. 1: Speed control will be taken over by position control even when the signal set in "Cd.45 Speed-position switching device selection" comes ON.	0	1528+100n	4328+100n
	■ Set with a decimal. 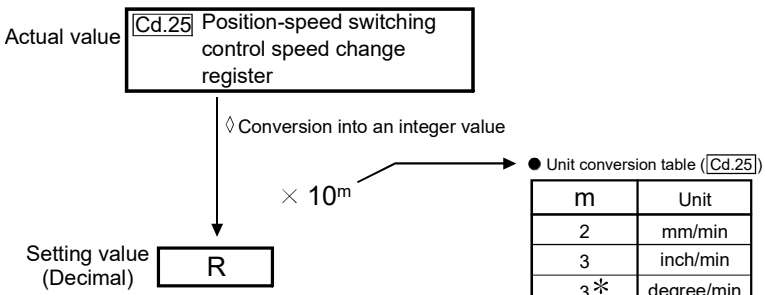 *: When "Pr.83 Speed control 10 x multiplier setting for degree axis" is valid: "2" Example: If "Cd. 25 Position-speed switching control speed change register" is set as "2000.00 mm/min", the buffer memory stores "200000".	0	1530+100n 1531+100n	4330+100n 4331+100n

n: Axis No.-1

<table>
<tr><th>Setting item</th><th>Setting details</th><th></th></tr>
<tr><td>[Cd.26] Position-speed switching enable flag</td><td>• Set whether the switching signal set in "[Cd.45] Speed-position switching device selection" is enabled or not.

Fetch cycle: At switching request</td><td></td></tr>
<tr><td>[Cd.27] Target position change value (New address)</td><td>• When changing the target position during a positioning operation, use this data item to specify a new positioning address.
• The setting value range differs according to the "[Pr.1] Unit setting".
<table>
<tr><th>[Pr.1] Unit setting</th><th>mm
(× 10^{-1} μm)</th><th>inch
(× 10^{-5} inch)</th><th>degree
(× 10^{-5} degree)</th><th>PLS
(PLS)</th></tr>
<tr><td>ABS</td><td>-2147483648
to
2147483647</td><td>-2147483648
to
2147483647</td><td>0 to 35999999</td><td>-2147483648
to
2147483647</td></tr>
<tr><td>INC</td><td>-2147483648
to
2147483647</td><td>-2147483648
to
2147483647</td><td>-2147483648
to
2147483647</td><td>-2147483648
to
2147483647</td></tr>
</table>
Fetch cycle: At change request</td><td></td></tr>
<tr><td>[Cd.28] Target position change value (New speed)</td><td>• When changing the target position during a positioning operation, use this data item to specify a new speed.
• The speed will not change if "0" is set.
• The setting value range differs according to the "[Pr.1] Unit setting".
<table>
<tr><th>[Pr.1] Unit setting</th><th>mm
(× 10^{-2} mm/min)</th><th>inch
(× 10^{-3} inch/min)</th><th>degree ✻
(×10^{-3} degree/min)</th><th>PLS
(PLS/s)</th></tr>
<tr><td>Setting range</td><td>0 to
2000000000</td><td>0 to
2000000000</td><td>0 to
2000000000</td><td>0 to 1000000000</td></tr>
</table>
✻: When "[Pr.83] Speed control 10 x multiplier setting for degree axis" is valid, this will be the setting range 0 to 2000000000 (× 10^{-2}degree/min).

Fetch cycle: At change request</td><td></td></tr>
<tr><td>[Cd.29] Target position change request flag</td><td>• Requests a change in the target position during a positioning operation.

Fetch cycle: Operation cycle</td><td></td></tr>
</table>

<table>
<tr><th rowspan="2"></th><th rowspan="2">Setting value</th><th rowspan="2">Default value</th><th colspan="2">Buffer memory address</th></tr>
<tr><th>QD77MS2
QD77MS4</th><th>QD77MS16</th></tr>
<tr><td></td><td>■ Set with a decimal.
 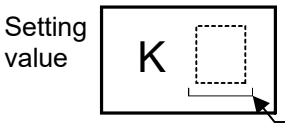

●Position-speed switching enable flag
0: Position control will not be taken over by speed control even when the signal set in "Cd.45 Speed-position switching device selection" comes ON.
1: Position control will be taken over by speed control when the signal set in "Cd.45 Speed-position switching device selection" comes ON.</td><td>0</td><td>1532+100n</td><td>4332+100n</td></tr>
<tr><td></td><td>■ Set with a decimal.
 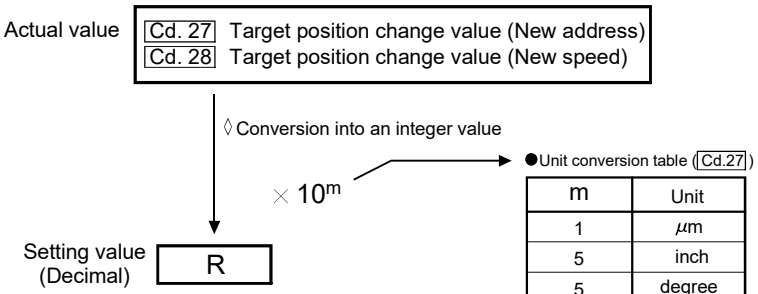

●Unit conversion table (Cd.27)
m | Unit
1 | μm
5 | inch
5 | degree
0 | PLS

Example: If "Cd. 28 Target position change value (New speed)" is set as "10000.00 mm/min", the buffer memory stores "1000000".
●Unit conversion table (Cd.28)
m | Unit
2 | mm/min
3 | inch/min
3✻ | degree/min
0 | PLS/s
✻: When "Pr.83 Speed control 10 x multiplier setting for degree axis" is valid: "2"</td><td>0</td><td>1534+100n
1535+100n

1536+100n
1537+100n</td><td>4334+100n
4335+100n

4336+100n
4337+100n</td></tr>
<tr><td></td><td>■ Set with a decimal.
 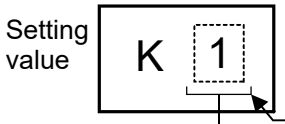

●Target position change request flag
1: Requests a change in the target position

The Simple Motion module resets the value to "0" automatically when the new target position value has been written.
(This indicates the completion of target position change request.)</td><td>0</td><td>1538+100n</td><td>4338+100n</td></tr>
</table>

n: Axis No.-1

Setting item		Setting details		
[Cd.30]	Simultaneous starting axis start data No. (axis 1 start data No.) QD77MS2 QD77MS4	• Use these data items to specify an axis 1 start data No. for each axis that has to start simultaneously. • Set "0" to any axis that should not start simultaneously.	Fetch cycle: At start	
	Simultaneous starting own axis start data No. QD77MS16	• Use these data items to specify a start data No. of own axis at multiple axes simultaneous starting.		
[Cd.31]	Simultaneous starting axis start data No. (axis 2 start data No.) QD77MS2 QD77MS4	• Use these data items to specify an axis 2 start data No. for each axis that has to start simultaneously. • Set "0" to any axis that should not start simultaneously.	Fetch cycle: At start	
	Simultaneous starting axis start data No.1 QD77MS16	• Use these data items to specify a start data No.1 for each axis that has to start simultaneously.		
[Cd.32]	Simultaneous starting axis start data No. (axis 3 start data No.) QD77MS4	• Use these data items to specify an axis 3 start data No. for each axis that has to start simultaneously. • Set "0" to any axis that should not start simultaneously.	Fetch cycle: At start	
	Simultaneous starting axis start data No.2 QD77MS16	• Use these data items to specify a start data No.2 for each axis that has to start simultaneously. Note) For 2 axis simultaneous starting, the axis setting is not required. (Setting value is ignored.)		
[Cd.33]	Simultaneous starting axis start data No. (axis 4 start data No.) QD77MS4	• Use these data items to specify an axis 4 start data No. for each axis that has to start simultaneously. • Set "0" to any axis that should not start simultaneously.	Fetch cycle: At start	
	Simultaneous starting axis start data No.3 QD77MS16	• Use these data items to specify a start data No.3 for each axis that has to start simultaneously. Note) For 2 axis simultaneous starting and 3 axis simultaneous starting, the axis setting is not required. (Setting value is ignored.)		
[Cd.34] Step mode		• To perform a step operation, use this data item to specify the units by which the stepping should be performed. Fetch cycle: At start		

	Setting value	Default value	Buffer memory address	
			QD77MS2 QD77MS4	QD77MS16
		0	1540+100n	
				4340+100n
	■ Set with a decimal. Setting value K □□□ ● QD77MS2 use Cd.30 , Cd.31 Simultaneous starting axis start data No. 1 to 600 ● QD77MS4 use Cd.30 to Cd.33 Simultaneous starting axis start data No. 1 to 600 ● QD77MS16 use Cd.30 Simultaneous starting own axis start data No. Cd.31 to Cd.33 Simultaneous starting axis start data No. 1 to 600	0	1541+100n	
				4341+100n
		0	1542+100n	
				4342+100n
		0	1543+100n	
				4343+100n
	■ Set with a decimal. Setting value K □ ● Step mode 0: Stepping by deceleration units 1: Stepping by data No. units	0	1544+100n	4344+100n

n: Axis No.-1

Setting item	Setting details	
[Cd.35] Step valid flag	• This data item validates or invalidates step operations. Fetch cycle: At start	
[Cd.36] Step start information	• To continue the step operation when the step function is used, set "1" in the data item. Fetch cycle: 14.2[ms]	
[Cd.37] Skip command	• To skip the current positioning operation, set "1" in this data item. Fetch cycle: Operation cycle (During positioning operation)	
[Cd.38] Teaching data selection	• This data item specifies the teaching result write destination. • Data are cleared to zero when the teaching ends. Fetch cycle: At operation request	
[Cd.39] Teaching positioning data No.	• This data item specifies data to be produced by teaching. • If a value between 1 and 600 is set, a teaching operation is done. • The value is cleared to "0" when the Simple Motion module is initialized, when a teaching operation completes, and when an illegal value (601 or higher) is entered. Fetch cycle: 103[ms]	

	Setting value	Default value	Buffer memory address	
			QD77MS2 QD77MS4	QD77MS16
	■ Set with a decimal. 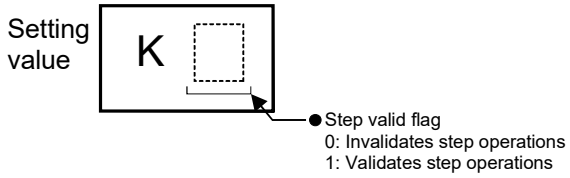	0	1545+100n	4345+100n
	■ Set with a decimal. 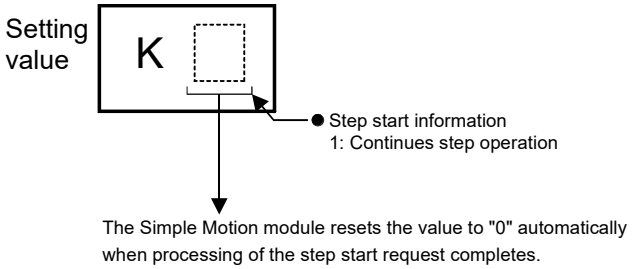	0	1546+100n	4346+100n
	■ Set with a decimal. 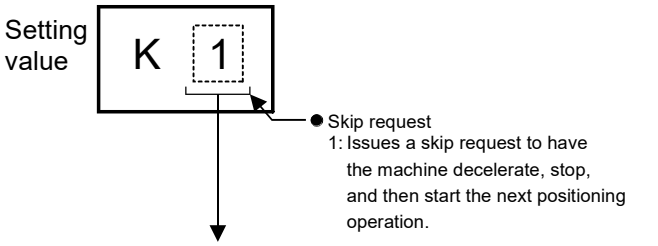	0	1547+100n	4347+100n
	■ Set with a decimal. 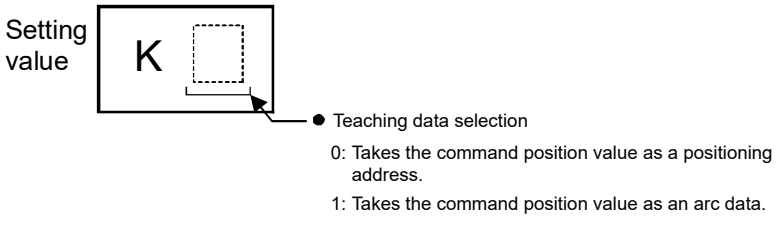	0	1548+100n	4348+100n
	■ Set with a decimal. 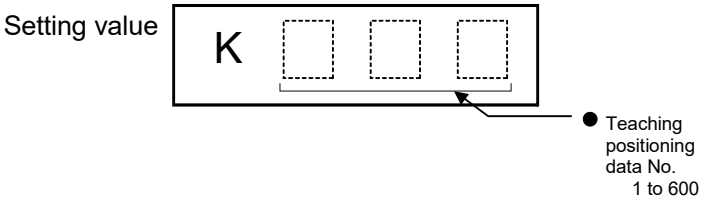	0	1549+100n	4349+100n

n: Axis No.-1

Setting item	Setting details	
[Cd.40] ABS direction in degrees	• This data item specifies the ABS moving direction carrying out the position control when "degree" is selected as the unit. Fetch cycle: At start	
[Cd.43] Simultaneous starting axis QD77MS16	• Set the number of simultaneous starting axes and target axis. When "2" is set to the number of simultaneous starting axes, set the target axis No. to the simultaneous starting axis No. 1. When "3" is set to the number of simultaneous starting axes, set the target axis No. to the simultaneous starting axis No.1 and 2. When "4" is set to the number of simultaneous starting axes, set the target axis No. to the simultaneous starting axis No.1 to 3. • When the same axis No. or axis No. of own axis is set to the multiple simultaneous starting axis No, or the value outside the range is set to the number of simultaneous starting axes, the error "Error before simultaneous start" (error code: 501) occurs and the operation is not executed. Note) Do not set the simultaneous starting axis No.2 and 3 for 2-axis interpolation, and do not set the simultaneous starting axis No.3 for 3-axis interpolation. The setting value is ignored. Fetch cycle: At start	
[Cd.45] Speed-position switching device selection	• Select the device used for speed-position switching. Note) If the setting is outside the range at start, operation is performed with the setting regarded as "0". Fetch cycle: At positioning start for speed-position switching control/position-speed switching control	
[Cd.46] Speed-position switching command	• Speed-position control switching is performed when "2" is set in "[Cd.45] Speed-position switching device selection". Other than setting value is ignored. Note) This parameter is made valid only when "2" is set in "[Cd.45] Speed-position switching device selection" at start. Fetch cycle: 0.88[ms]	

	Setting value	Default value	Buffer memory address	
			QD77MS2 QD77MS4	QD77MS16
	■ Set with a decimal. 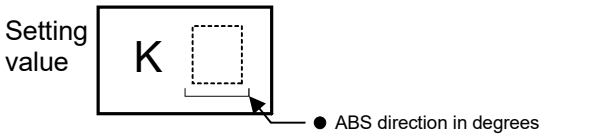 ● ABS direction in degrees 0: Takes a shortcut. (Specified direction ignored.) 1: ABS circular right 2: ABS circular left	0	1550+100n	4350+100n
	■ Set with a hexadecimal. 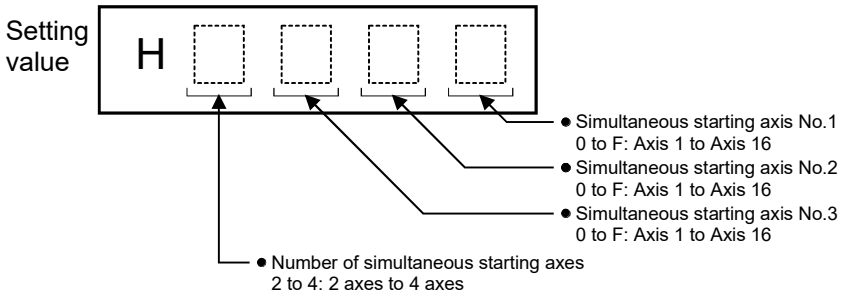 	0000H		4339+100n
	■ Set with a decimal. ● Speed-position switching device selection <Speed-position switching control> 0: Use the external command signal for switching from speed control to position control 1: Use the proximity dog signal for switching from speed control to position control 2: Use "Cd.46 Speed-position switching command" for switching from speed control to position control <Position-speed switching control> 0: Use the external command signal for switching from position control to speed control 1: Use the proximity dog signal for switching from position control to speed control 2: Use "Cd.46 Speed-position switching command" for switching from position control to speed control	0	1566+100n	4366+100n
	■ Set with a decimal. ● Speed-position switching command <Speed-position switching control> 0: Not switch from speed control to position control 1: Switch from speed control to position control <Position-speed switching control> 0: Not switch from position control to speed control 1: Switch from position control to speed control	0	1567+100n	4367+100n

n: Axis No.-1

Setting item	Setting details	
[Cd.100] Servo OFF command	• Executes servo OFF for each axis. Fetch cycle: Operation cycle [POINT] To execute servo ON for axes other than axis 1 being servo OFF, write "1" to storage buffer memory address of axis 1 and then turn ON all axis servo ON [Y1] signal.	
[Cd.101] Torque output setting value	• Sets the torque output value. Set a ratio against the rated torque in percentage unit. Fetch cycle: At start [POINT] • If the "[Cd.101] Torque output setting value" is "0", the "[Pr.17] Torque limit setting value" will be its value. • If a value beside "0" is set in the "[Cd.101] Torque output setting value", the torque generated by the servomotor will be limited by that value. • The "[Pr.17] Torque limit setting value" of the detailed parameter becomes effective at the PLC READY signal rising edge. • The "[Cd.101] Torque output setting value" (refer to the start) axis control data can be changed at all times. Therefore in the "[Cd.101] Torque output setting value" is used when you must change. (Refer to Section 13.5.4 "Torque change function".)	
[Cd.108] Gain switching command flag	• The command required to carry out "gain switching" of the servo amplifier from the Simple Motion module. Fetch cycle: Operation cycle [POINT] • For other than MR-J5(W)-B If the setting is other than "0" and "1", operation is turned OFF in the "gain switching" with the setting regard as "0". Refer to each servo amplifier instruction manual for details of the gain switching. • For MR-J5(W)-B If the setting is other than "0" to "3"(Note-1), the gain switching and gain switching 2 commands are turned OFF with the setting regard as "0". Refer to "Appendix 6.6 Connection with MR-J5(W)-B" for details of the gain switching and gain switching 2 commands. (Note-1): "3" is for maker setting.	
[Cd.112] Torque change function switching request	• Sets "same setting/individual setting" of the forward torque limit value or reverse torque limit value in the torque change function. Fetch cycle: Operation cycle [POINT] • Set "0" normally. (when the forward torque limit value and reverse torque limit value are not divided.) • When a value except "1" is set, it operates as "forward/reverse torque limit value same setting".	

	Setting value	Default value	Buffer memory address	
			QD77MS2 QD77MS4	QD77MS16
	■ Set with a decimal. 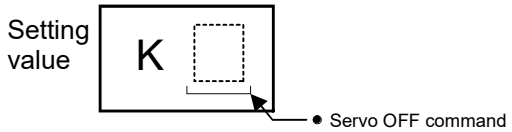 Valid only during servo ON for all axes.	0	1551+100n	4351+100n
	■ Set with a decimal. 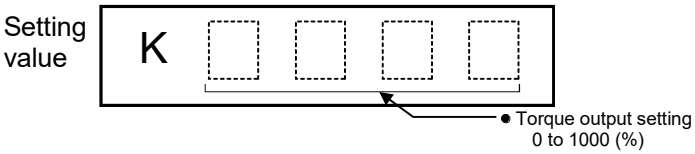 	0	1552+100n	4352+100n
	■ Set with a decimal. 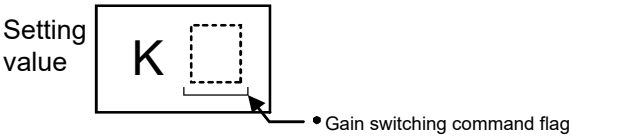 	0	1559+100n	4359+100n
	■ Set with a decimal. 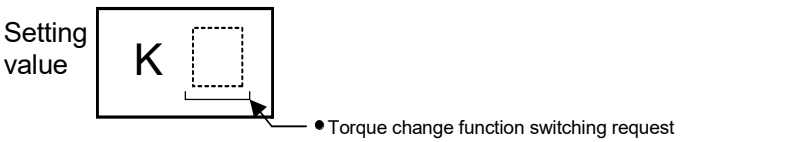 	0	1563+100n	4363+100n

n: Axis No.-1

Setting item	Setting details	
[Cd.113] New reverse torque value	• "1" is set in "[Cd.112] Torque change function switching request", a new reverse torque limit value is set. (when "0" is set in "[Cd.112] Torque change function switching request", the setting value is invalid.) • Set a value within "0" to "[Pr.17] Torque limit setting value". Set a ratio against the rated torque in percentage unit. (The new torque value is invalid when "0" is set, and "[Pr.17] Torque limit setting value" or "[Cd.101] Torque output setting value" becomes valid. The range of torque change is 1 to "[Pr.17] Torque limit setting value". Fetch cycle: Operation cycle	
[Cd.130] Servo parameter read/write request	• To change the servo parameter after it is transferred, set the write request of the servo parameter. Set "0001H" or "0002H" after setting "[Cd.131] Parameter No." and "[Cd.132] Change data". • To change the servo parameter stored in the internal memory of the Simple Motion module, set the read/write request of the servo parameter. For writing, set "0022H" after setting "[Cd.131] Parameter No." and "[Cd.132] Change data". For reading, set "0032H" after setting "[Cd.131] Parameter No.". Fetch cycle: Main cycle (Note-1) (Note-1): Cycle of processing executed at free time except for the positioning control. It changes by status of axis start. [POINT] • If this control data is set to "0001H" or "0002H" in the following states, it becomes "0003H". (a) The connection with the servo amplifier is not established or there is an error in the communication. (b) "[Cd.131] Parameter No." is outside the setting range. (c) The servo amplifier does not support the writing of the specified number of words. • If this control data is set to "0022H" or "0032H" in the following states, it becomes "0003H". (a) The servo amplifier used is other than MR-J5(W)-B. (b) "[Cd.131] Parameter No." is outside the setting range.	

	Setting value	Default value	Buffer memory address	
			QD77MS2 QD77MS4	QD77MS16
	■ Set with a decimal. 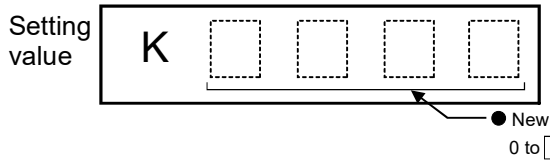	0	1564+100n	4364+100n
	■ Set with a hexadecimal. 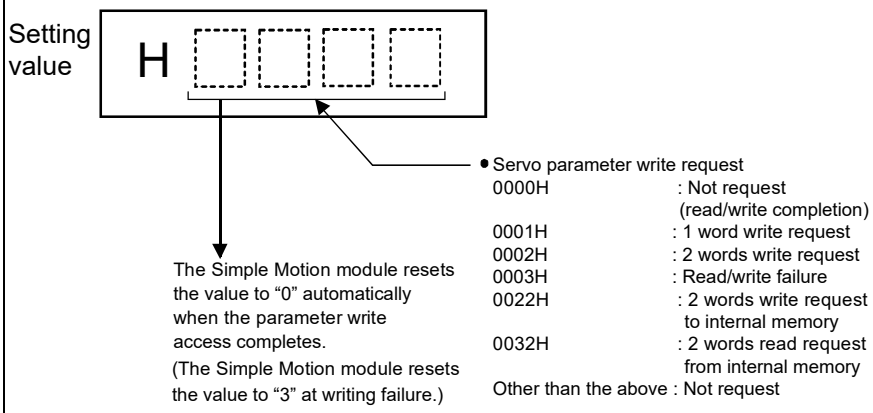 Set "0001H" to MR-J4(W)-B and MR-J3(W)-B, and "0002H" to the VCII series/VPH series.	0000H	1554+100n	4354+100n

n: Axis No.-1

Setting item	Setting details	
[Cd.131] Parameter No. (Setting for servo parameters to be changed)	• Set the servo parameter to be changed. Fetch cycle: At change request	

	Setting value	Default value	Buffer memory address	
			QD77MS2 QD77MS4	QD77MS16
	■ Set with a hexadecimal. ・MR-J5(W)-B 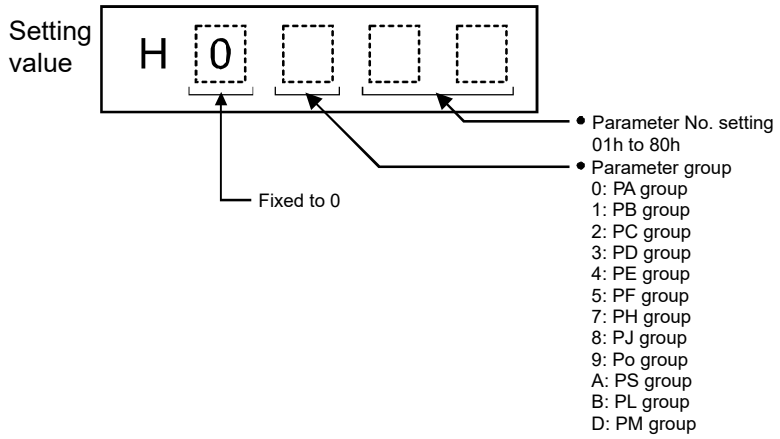 ・MR-J4(W)-B/MR-JE-B(F) 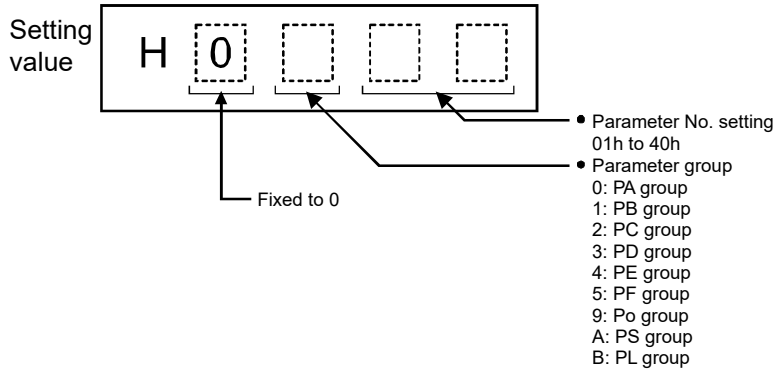 ・VCII series/VPH series 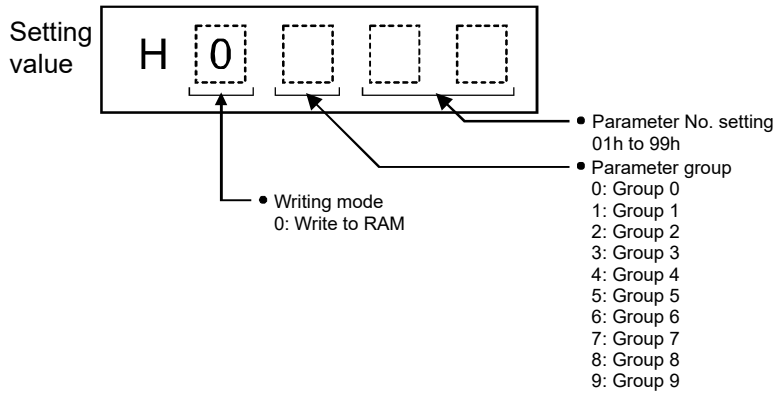 	0000H	1555+100n	4355+100n

n: Axis No.-1

Setting item	Setting details	
[Cd.132] Change data	• Set the change value of servo parameter set in "[Cd.131] Parameter No.". Fetch cycle: At change request	
[Cd.133] Semi/Fully closed loop switching request	• Set the switching of semi closed control and fully closed control. Fetch cycle: Operation cycle (Fully closed loop control servo amplifier only)	

	Setting value	Default value	Buffer memory address	
			QD77MS2 QD77MS4	QD77MS16
	■ Set with a decimal or hexadecimal. [1 word write request] When "0001H" is set in "[Cd.130] Servo parameter read/write request", set the change value to the low-order buffer memory. [2 words write request] When "0002H" or "0022H" is set in "[Cd.130] Servo parameter read/write request", set the change values to the high-order buffer memory and low-order buffer memory. 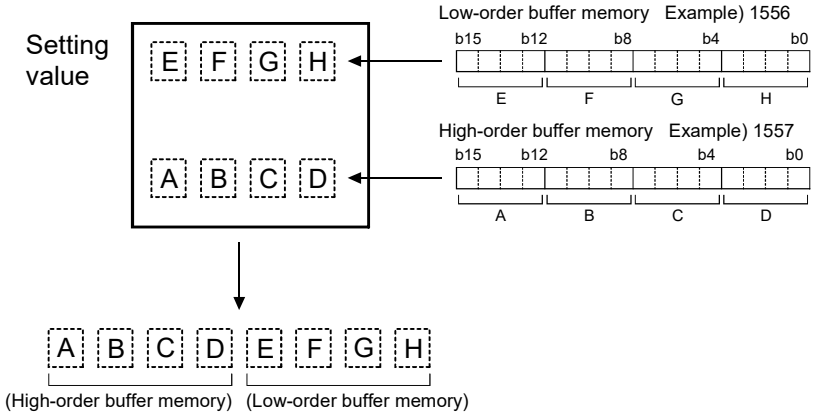	0	1556+100n 1557+100n	4356+100n 4357+100n
	■ Set with a decimal. 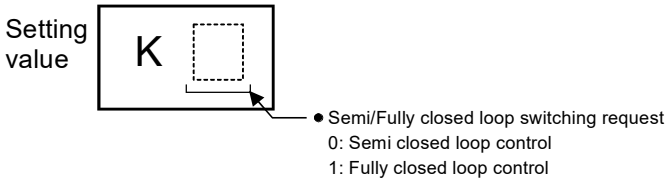	0	1558+100n	4358+100n

n: Axis No.-1

<table>
<tr><th>Setting item</th><th>Setting details</th><th></th></tr>
<tr><td>[Cd.136] PI-PID switching request</td><td>• Set the PI-PID switching to servo amplifier.

Fetch cycle: Operation cycle</td><td></td></tr>
<tr><td>[Cd.138] Control mode switching request</td><td>• Request the control mode switching.
Set "1" after setting "[Cd.139] Control mode setting".
• The Simple Motion module sets "0" at completion of control mode switching.

Fetch cycle: Operation cycle</td><td></td></tr>
<tr><td>[Cd.139] Control mode setting</td><td>• Set the control mode to be changed in the speed-torque control.

Fetch cycle: At control mode switching</td><td></td></tr>
<tr><td>[Cd.140] Command speed at speed control mode</td><td>• Set the command speed at speed control mode.
• The setting value range differs according to the "[Pr.1] Unit setting".
<table>
<tr><td>[Pr.1] Unit setting</td><td>mm
(× 10-2 mm/min)</td><td>inch
(× 10-3 inch/min)</td><td>degree ✻
(× 10-3 degree/min)</td><td>PLS
(PLS/s)</td></tr>
<tr><td>Setting range</td><td>-2000000000 to 2000000000</td><td>-2000000000 to 2000000000</td><td>-2000000000 to 2000000000</td><td>-1000000000 to 1000000000</td></tr>
</table>
✻: When "[Pr.83] Speed control 10 x multiplier setting for degree axis" is valid, this will be the setting range -2000000000 to 2000000000 (× 10-2degree/min).

Fetch cycle: Operation cycle (At speed control mode)</td><td></td></tr>
<tr><td>[Cd.141] Acceleration time at speed control mode</td><td>• Set the acceleration time at speed control mode.
(Set the time for the speed to increase from "0" to "[Pr.8] Speed limit value".)
0 to 65535 (ms)

Fetch cycle: At control mode switching</td><td></td></tr>
</table>

	Setting value	Default value	Buffer memory address	
			QD77MS2 QD77MS4	QD77MS16
	■ Set with a decimal. 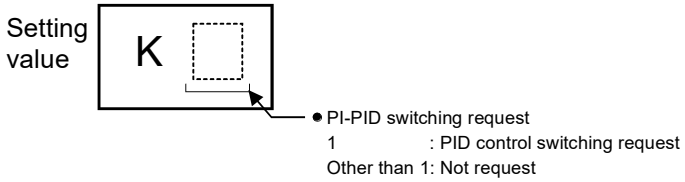 	0	1565+100n	4365+100n
	■ Set with a decimal. 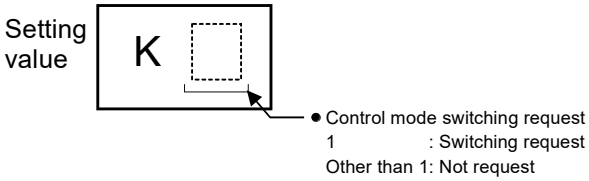 	0	1574+100n	4374+100n
	■ Set with a decimal. 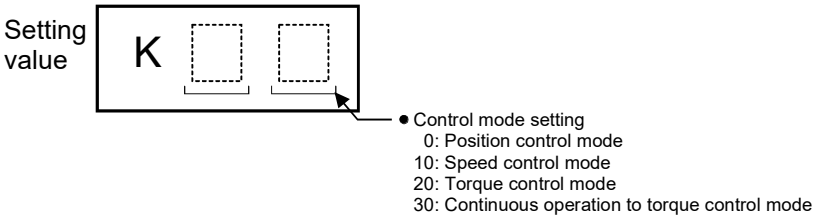 	0	1575+100n	4375+100n
	■ Set with a decimal. 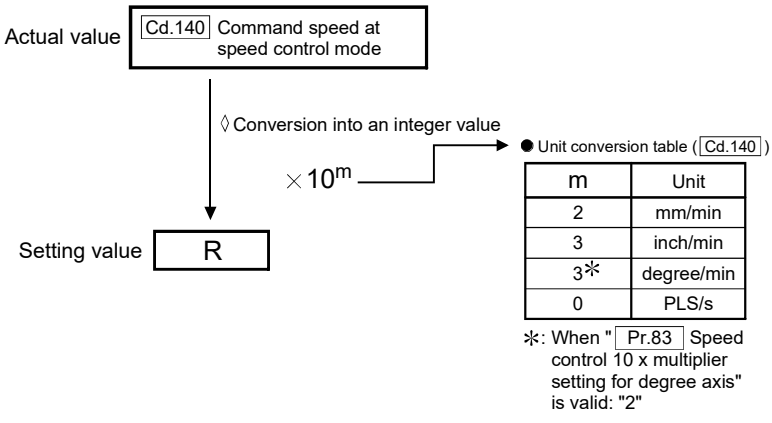 	0	1576+100n 1577+100n	4376+100n 4377+100n
	■ Set with a decimal. 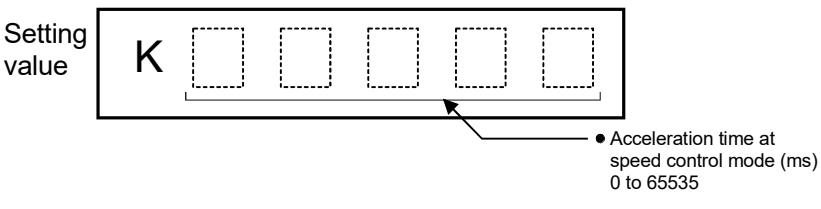 	1000	1578+100n	4378+100n

n: Axis No.-1

<table>
<tr><th>Setting item</th><th>Setting details</th><th></th></tr>
<tr><td>[Cd.142] Deceleration time at speed control mode</td><td>• Set the deceleration time at speed control mode.
(Set the time for the speed to decrease from "[Pr.8] Speed limit value" to "0".)
0 to 65535 (ms)

Fetch cycle: At control mode switching</td><td></td></tr>
<tr><td>[Cd.143] Command torque at torque control mode</td><td>• Set the command torque at torque control mode. Set a ratio against the rated torque in 0.1% unit.
-10000 to 10000 (× 0.1%)

Fetch cycle: Operation cycle (At torque control mode)</td><td></td></tr>
<tr><td>[Cd.144] Torque time constant at torque control mode (Forward direction)</td><td>• Set the time constant at driving during torque control mode.
(Set the time for the torque to increase from "0" to "[Pr.17] Torque limit setting value".)
0 to 65535 (ms)

Fetch cycle: At control mode switching</td><td></td></tr>
<tr><td>[Cd.145] Torque time constant at torque control mode (Negative direction)</td><td>• Set the time constant at regeneration during torque control mode.
(Set the time for the torque to decrease from "[Pr.17] Torque limit setting value" to "0".)
0 to 65535 (ms)

Fetch cycle: At control mode switching</td><td></td></tr>
<tr><td>[Cd.146] Speed limit value at torque control mode</td><td>• Set the speed limit value at torque control mode.
• The setting value range differs according to the "[Pr.1] Unit setting".
<table><tr><th>[Pr.1] Unit setting</th><th>mm
(× 10-2 mm/min)</th><th>inch
(× 10-3 inch/min)</th><th>degree ✻
(× 10-3 degree/min)</th><th>PLS
(PLS/s)</th></tr><tr><td>Setting range</td><td>0 to 2000000000</td><td>0 to 2000000000</td><td>0 to 2000000000</td><td>0 to 1000000000</td></tr></table>✻: When "[Pr.83] Speed control 10 x multiplier setting for degree axis" is valid, this will be the setting range 0 to 2000000000 (× 10-2degree/min).

Fetch cycle: Operation cycle (At torque control mode)</td><td></td></tr>
</table>

	Setting value	Default value	Buffer memory address	
			QD77MS2 QD77MS4	QD77MS16
	■ Set with a decimal. 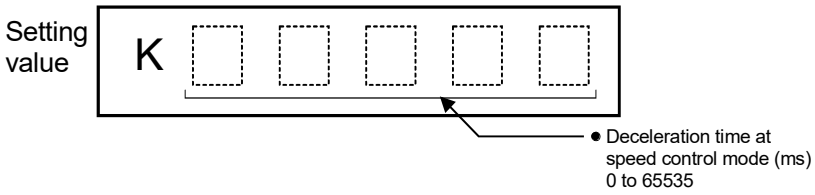	1000	1579+100n	4379+100n
	■ Set with a decimal. 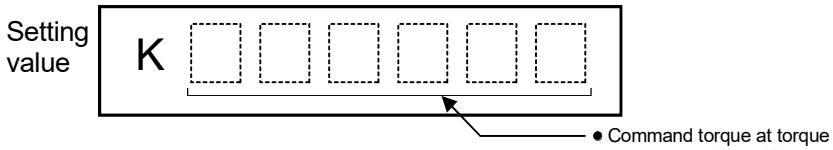	0	1580+100n	4380+100n
	■ Set with a decimal. 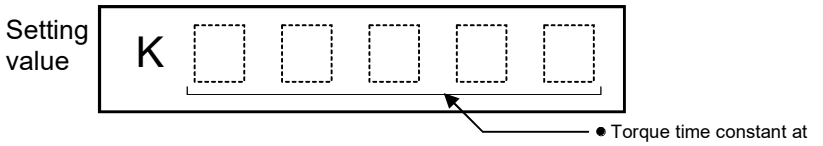	1000	1581+100n	4381+100n
	■ Set with a decimal. 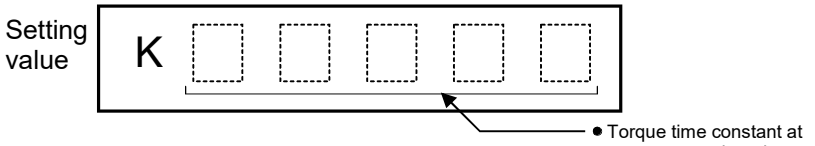	1000	1582+100n	4382+100n
	■ Set with a decimal. 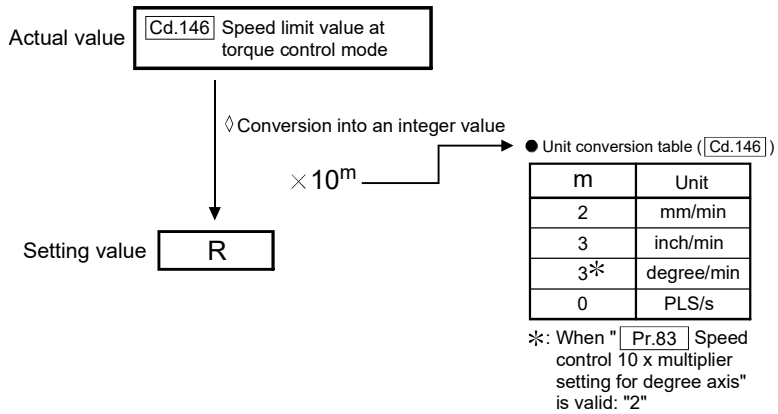	1	1584+100n 1585+100n	4384+100n 4385+100n

n: Axis No.-1

<table>
<tr><th>Setting item</th><th>Setting details</th><th></th></tr>
<tr><td>[Cd.147] Speed limit value at continuous operation to torque control mode</td><td>• Set the speed limit value at continuous operation to torque control mode.
• The setting value range differs according to the "[Pr.1] Unit setting".
<table><tr><td>[Pr.1] Unit setting</td><td>mm
(× 10-2 mm/min)</td><td>inch
(× 10-3 inch/min)</td><td>degree ✻
(× 10-3 degree/min)</td><td>PLS
(PLS/s)</td></tr><tr><td>Setting range</td><td>-2000000000 to 2000000000</td><td>-2000000000 to 2000000000</td><td>-2000000000 to 2000000000</td><td>-1000000000 to 1000000000</td></tr></table>✻: When "[Pr.83] Speed control 10 x multiplier setting for degree axis" is valid, this will be the setting range -2000000000 to 2000000000 (× 10-2degree/min).

Fetch cycle: Operation cycle (At continuous operation to torque control mode)</td><td></td></tr>
<tr><td>[Cd.148] Acceleration time at continuous operation to torque control mode</td><td>• Set the acceleration time at continuous operation to torque control mode.
(Set the time for the speed to increase from "0" to "[Pr.8] Speed limit value".)
0 to 65535 (ms)

Fetch cycle: At control mode switching</td><td></td></tr>
<tr><td>[Cd.149] Deceleration time at continuous operation to torque control mode</td><td>• Set the deceleration time at continuous operation to torque control mode.
(Set the time for the speed to decrease from "[Pr.8] Speed limit value" to "0".)
0 to 65535 (ms)

Fetch cycle: At control mode switching</td><td></td></tr>
<tr><td>[Cd.150] Target torque at continuous operation to torque control mode</td><td>• Set the target torque at continuous operation to torque control mode. Set a ratio against the rated torque in 0.1% unit.
-10000 to 10000 (× 0.1%)

Fetch cycle: Operation cycle (At continuous operation to torque control mode)</td><td></td></tr>
<tr><td>[Cd.151] Torque time constant at continuous operation to torque control mode (Forward direction)</td><td>• Set the time constant at driving during continuous operation to torque control mode.
(Set the time for the torque to increase from "0" to "[Pr.17] Torque limit setting value".)
0 to 65535 (ms)

Fetch cycle: At control mode switching</td><td></td></tr>
</table>

	Setting value	Default value	Buffer memory address	
			QD77MS2 QD77MS4	QD77MS16
	■ Set with a decimal. 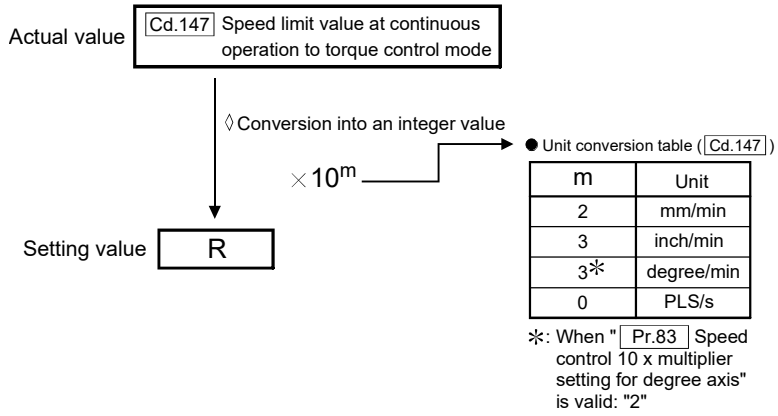	0	1586+100n 1587+100n	4386+100n 4387+100n
	■ Set with a decimal. 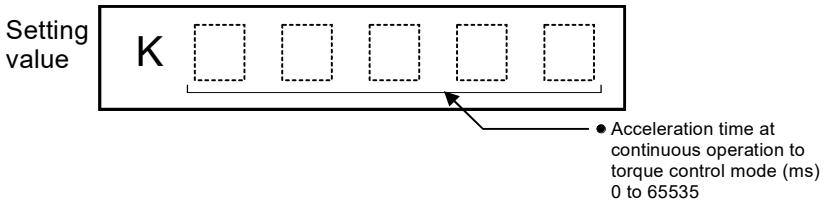	1000	1588+100n	4388+100n
	■ Set with a decimal. 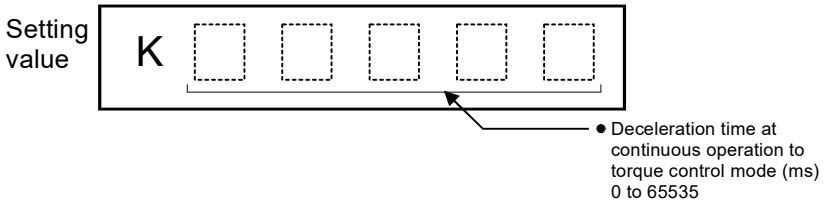	1000	1589+100n	4389+100n
	■ Set with a decimal. 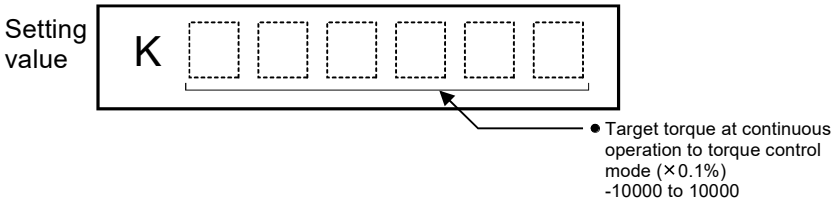	0	1590+100n	4390+100n
	■ Set with a decimal. 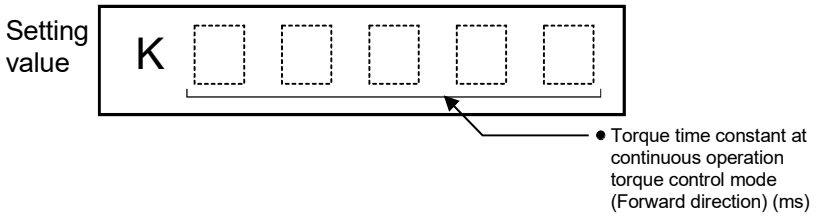	1000	1591+100n	4391+100n

n: Axis No.-1

<table>
<tr><th>Setting item</th><th>Setting details</th><th></th></tr>
<tr><td>[Cd.152] Torque time constant at continuous operation to torque control mode (Negative direction)</td><td>• Set the time constant at regeneration during continuous operation to torque control mode.
(Set the time for the torque to decrease from "[Pr.17] Torque limit setting value" to "0".)
0 to 65535 (ms)

Fetch cycle: At control mode switching</td><td></td></tr>
<tr><td>[Cd.153] Control mode auto-shift selection</td><td>• Set the switching condition when switching to continuous operation to torque control mode.
0: No switching condition..... Switching is executed at switching request to continuous operation to torque control mode.
1: Command position value pass..... Switching is executed when "[Md.20] Command position value" passes the address set in "[Cd.154] Control mode auto-shift parameter" after switching request to continuous operation to torque control mode.
2: Actual position value pass ..... Switching is executed when "[Md.101] Actual position value" passes the address set in "[Cd.154] Control mode auto-shift parameter" after switching request to continuous operation to torque control mode.

Fetch cycle: At control mode switching</td><td></td></tr>
<tr><td>[Cd.154] Control mode auto-shift parameter</td><td>• Set the condition value when setting the control mode switching condition.
• The setting value differs depending on the value set in "[Cd.153] Control mode auto-shift selection".
When "1" or "2" is set in "[Cd.153] Control mode auto-shift selection": Set the switching address.
• The setting value range differs according to the "[Pr.1] Unit setting".
<table>
<tr><th>[Pr.1] Unit setting</th><th>mm ($\times 10^{-1}$ μm)</th><th>inch ($\times 10^{-5}$ inch)</th><th>degree ($\times 10^{-5}$ degree)</th><th>PLS (PLS)</th></tr>
<tr><td>Setting range</td><td>-2147483648 to 2147483647</td><td>-2147483648 to 2147483647</td><td>0 to 35999999</td><td>-2147483648 to 2147483647</td></tr>
</table>
Fetch cycle: At control mode switching</td><td></td></tr>
</table>

	Setting value	Default value	Buffer memory address	
			QD77MS2 QD77MS4	QD77MS16
	■ Set with a decimal. 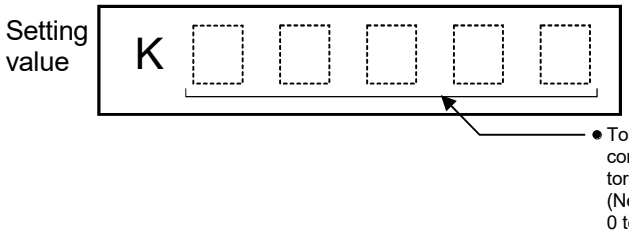	1000	1592+100n	4392+100n
	■ Set with a decimal. 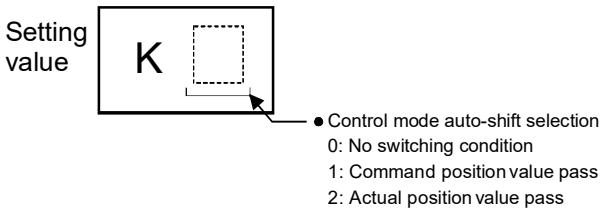	0	1593+100n	4393+100n
	■ Set with a decimal. 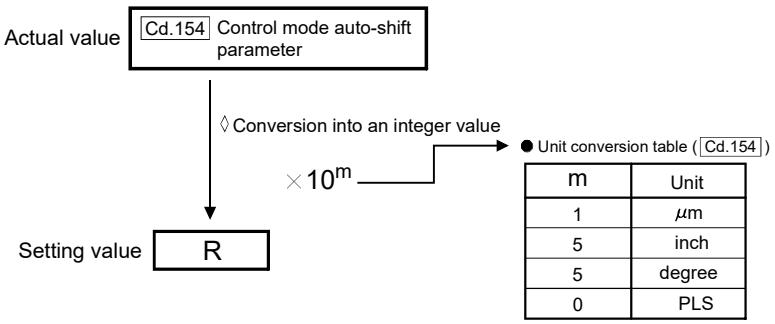 m / Unit: 1 / μm; 5 / inch; 5 / degree; 0 / PLS	0	1594+100n 1595+100n	4394+100n 4395+100n

n: Axis No.-1

Setting item	Setting details	
[Cd.180] Axis stop QD77MS16	• When the axis stop signal turns ON, the HPR control, positioning control, JOG operation, inching operation, manual pulse generator operation, speed-torque control, etc. will stop. • By turning the axis stop signal ON during positioning operation, the positioning operation will be "stopped". • Whether to decelerate stop or rapidly stop can be selected with "[Pr.39] Stop group 3 rapid stop selection". • During interpolation control of the positioning operation, if the axis stop signal of any axis turns ON, all axes in the interpolation control will decelerate and stop. Fetch cycle: Operation cycle	
[Cd.181] Forward run JOG start QD77MS16	• When the JOG start signal is ON, JOG operation will be carried out at the "[Cd.17] JOG speed". When the JOG start signal turns OFF, the operation will decelerate and stop. • When inching movement amount is set, the designated movement amount is output for one operation cycle and then the operation stops. Fetch cycle: Operation cycle	
[Cd.182] Reverse run JOG start QD77MS16		
[Cd.183] Execution prohibition flag QD77MS16	• If the execution prohibition flag is ON when the positioning start signal turns ON, positioning control does not start until the execution prohibition flag turns OFF. Used with the "Pre-reading start function". (Refer to Section 13.7.7) Fetch cycle: At start	

	Setting value	Default value	Buffer memory address	
			QD77MS2 QD77MS4	QD77MS16
	■ Set with a decimal. 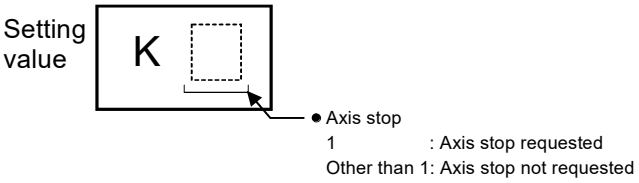 	0		30100+10n
	■ Set with a decimal. 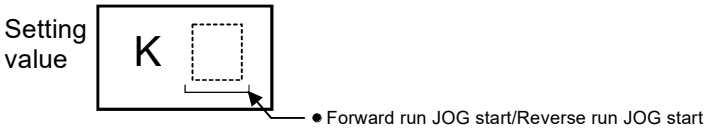 	0		30101+10n
		0		30102+10n
	■ Set with a decimal. 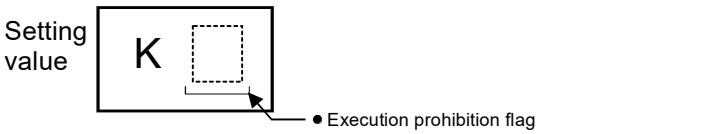 	0		30103+10n

n: Axis No.-1

MEMO

Chapter 6 Sequence Program Used for Positioning Control

The programs required to carry out positioning control with the Simple Motion module are explained in this chapter.

The sequence program required for control is created allowing for the "start conditions", "start time chart", "device settings" and general control configuration. (The parameters, positioning data, block start data and condition data, etc., must be set in the Simple Motion module according to the control to be executed, and program for setting the control data or a program for starting the various controls must be created.)

The first half of this chapter explains the program configuration of general control, and the latter half explains the program details. Create the required program while referring to the various control details explained in "Section 2", and to Chapter 5 "Data Used for Positioning Control".

6.1 Precautions for creating program 6- 2
6.2 List of devices used 6- 6
6.3 Creating a program 6-16
6.3.1 General configuration of program 6-16
6.3.2 Positioning control operation program 6-17
6.4 Positioning program examples 6-21
6.5 Program details 6-53
6.5.1 Initialization program 6-53
6.5.2 Start details setting program 6-54
6.5.3 Start program 6-56
6.5.4 Continuous operation interrupt program 6-68
6.5.5 Restart program 6-70
6.5.6 Stop program 6-73

6.1 Precautions for creating program

The common precautions to be taken when writing data from the PLC CPU to the buffer memory of Simple Motion module are described below.
When diverting any of the program examples introduced in this manual to the actual system, fully verify that there are no problems in the controllability of the target system.

(1) Reading/writing the data

Setting the data explained in this chapter (various parameters, positioning data, block start data) should be set using GX Works2.
When set with the sequence program, many sequence programs and devices must be used. This will not only complicate the program, but will also increase the scan time.
When rewriting the positioning data during continuous path control or continuous positioning control, rewrite the data four positioning data items before the actual execution. If the positioning data is not rewritten before the positioning data four items earlier is executed, the process will be carried out as if the data was not rewritten.

(2) Restrictions to speed change execution interval

Provide an interval of 100ms or more when changing the speed or performing override function with the Simple Motion module.

(3) Process during overrun

Overrun is prevented by the setting of the upper and lower stroke limits with the detailed parameter 1.
However, this applies only when the Simple Motion module is operating correctly. It is recommended to create an external circuit including a boundary limit switch to ensure the whole system safety as follows: the external circuit that turns OFF the main circuit power of the servo amplifier when the boundary limit switch operates.

(4) System configuration

Unless particularly designated, the sequence program for the following system using QD77MS4 is shown in this chapter and subsequent.
Refer to Section 6.2 for the application of the devices to be used.

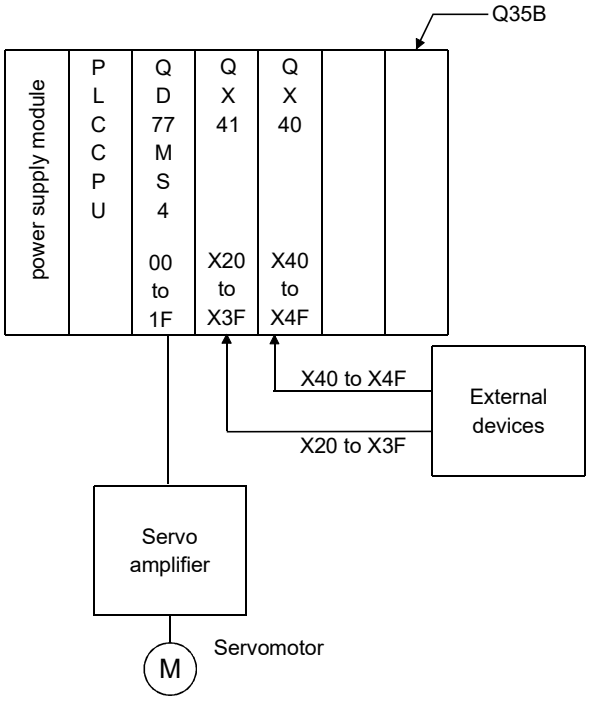

(5) Control unit

In the program, the unit of "0: mm, 2: degree" is set for the basic parameter 1.

(6) Communication with the Simple Motion module

There are two methods for communication with the Simple Motion module using the sequence program: a method using an "intelligent function device" and a method using a FROM/TO command.
In the sequence program in this chapter and subsequent, the program example using the "intelligent function device" is shown without using a FROM/TO command for communication with the Simple Motion module.
When using the FROM/TO command for communication with the Simple Motion module, change the circuit incorporating the "intelligent function device" as follows.

(a) When the circuit uses the "intelligent function device" on the destination (D) side of a MOV command, change the command to a TO command.

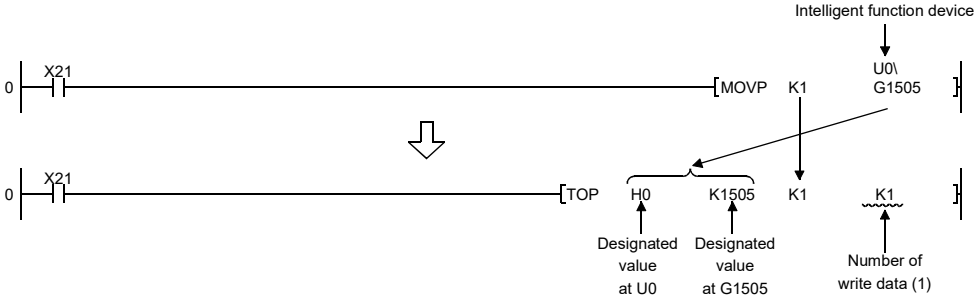

(b) When the circuit uses the "intelligent function device" on the source(s) side and the destination (D) side of a MOV command, change the command to a FROM command and a TO command.

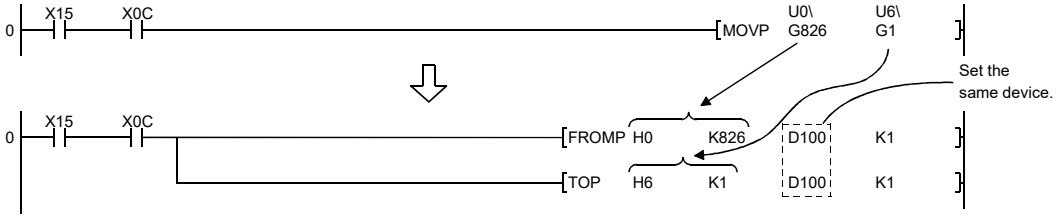

(c) When the circuit uses the "intelligent function device" for a COMPARISON command, change the command to a FROM command and a COMPARISON command.

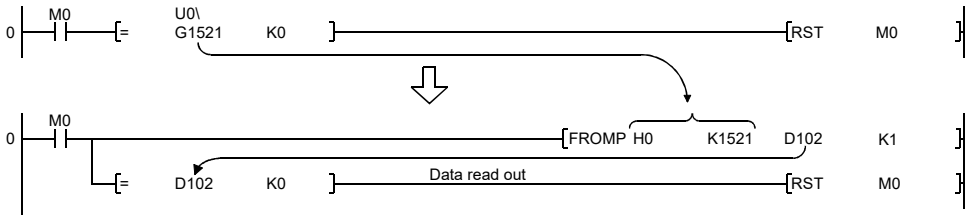

(d) When the circuit uses the "intelligent function device" for a WAND command, change the command to a FROM command and a WAND command.

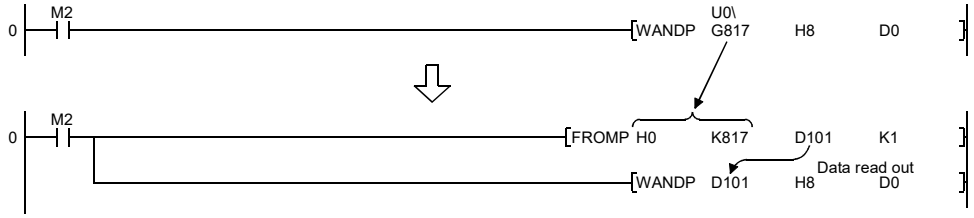

(7) Conversion of sequence program from QD77MS2/QD77MS4 to QD77MS16

When the sequence program is changed from QD77MS2/QD77MS4 to QD77MS16, change the I/O signals with different arrangement as follows.

(a) When not using index modification

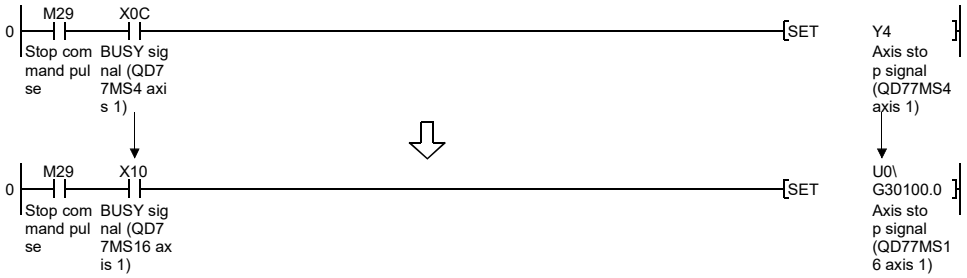

(b) When using index modification

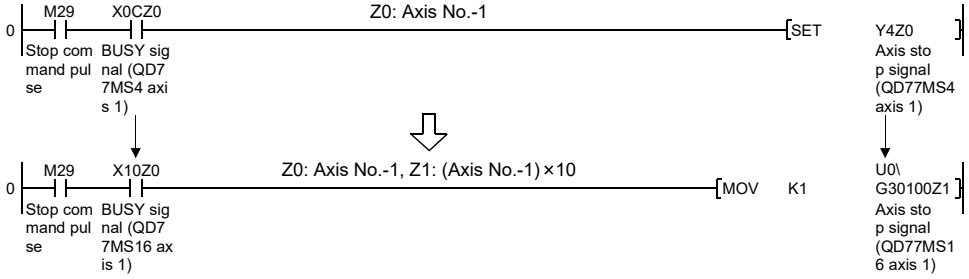

REMARK

Refer to the "QnUCPU User's Manual (Function Explanation, Program Fundamentals)" for the intelligent function devices.
Refer to the "MELSEC-Q/L Programming Manual (Common Instructions)" for detail commands used in those programs shown in this chapter and subsequent.

6.2 List of devices used

In the sequence programs using QD77MS4 shown in this chapter and subsequent, the application of the devices used are as follows.
The I/O numbers for Simple Motion module indicate those when the head I/O number is set to "0H".
If it is set to other than "0H", change the I/O number according to setting of head I/O number.
In addition, change the external inputs, external outputs, internal relays, data resisters, and timers according to the system used.

(1) Inputs/outputs, external inputs/external outputs, and internal relays of QD77MS4

Device name		Device				Application	Details when ON
		Axis 1	Axis 2	Axis 3	Axis 4		
Inputs/ outputs of QD77MS4	Input	X0				READY signal	QD77MS preparation completed
		X1				Synchronization flag	QD77MS buffer memory accessible
		X4	X5	X6	X7	M code ON signal	M code outputting
		X8	X9	XA	XB	Error detection signal	Error detected
		XC	XD	XE	XF	BUSY signal	BUSY (operating)
		X10	X11	X12	X13	Start complete signal	Start completed
		X14	X15	X16	X17	Positioning complete signal	Positioning completed
	Out-put	Y0				PLC READY signal	PLC CPU preparation completed
		Y1				All axis servo ON signal	All axis servo ON signal
		Y4	Y5	Y6	Y7	Axis stop signal	Requesting stop
		Y8	YA	YC	YE	Forward run JOG start signal	Starting forward run JOG
		Y9	YB	YD	YF	Reverse run JOG start signal	Starting reverse run JOG
		Y10	Y11	Y12	Y13	Positioning start signal	Requesting start
		Y14	Y15	Y16	Y17	Execution prohibition request	Execution prohibition
External input (command)		X20	—			HPR request OFF command	Commanding HPR request OFF
		X21				External command valid command	Commanding external command valid setting
		X22				External command invalid command	Commanding external command invalid
		X23				Machine HPR command	Commanding machine HPR
		X24				Fast HPR command	Commanding fast HPR
		X25				Positioning start command	Commanding positioning start
		X26				Speed-position switching operation command	Commanding speed-position switching operation
		X27				Speed-position switching enable command	Commanding speed-position switching enable
		X28				Speed-position switching prohibit command	Commanding speed-position switching prohibit
		X29				Movement amount change command	Commanding movement amount change
		X2A				High-level positioning control start command	Commanding high-level positioning control start
		X2B				Positioning start command (dedicated instruction)	Commanding positioning start

Device name	Device				Application	Details when ON
	Axis 1	Axis 2	Axis 3	Axis 4		
External input (command)	X2C	—			M code OFF command	Commanding M code OFF
	X2D				JOG operation speed setting command	Commanding JOG operation speed setting
	X2E				Forward run JOG/inching command	Commanding forward run JOG/inching operation
	X2F				Reverse run JOG/inching command	Commanding reverse run JOG/inching operation
	X30				Manual pulse generator operation enable command	Commanding manual pulse generator operation enable
	X31				Manual pulse generator operation disable command	Commanding manual pulse generator operation disable
	X32				Speed change command	Commanding speed change
	X33				Override command	Commanding override
	X34				Acceleration/deceleration time change command	Commanding acceleration/deceleration time change
	X35				Acceleration/deceleration time change disable command	Commanding acceleration/deceleration time change disable
	X36				Torque change command	Commanding torque change
	X37				Step operation command	Commanding step operation
	X38				Skip command	Commanding skip
	X39				Teaching command	Commanding teaching
	X3A				Continuous operation interrupt command	Commanding continuous operation interrupt
	X3B				Restart command	Commanding restart
	X3C				Parameter initialization command	Commanding parameter initialization
	X3D				Flash ROM write command	Commanding flash ROM write
	X3E	—			Error reset command	Commanding error reset
	X3F				Stop command	Commanding stop
	X40				Position-speed switching operation command	Position-speed switching operation command
	X41				Position-speed switching enable command	Position-speed switching enable command
	X42				Position-speed switching prohibit command	Position-speed switching prohibit command
	X43				Speed change command	Speed change command
	X44				Inching movement amount setting command	Inching movement amount setting command
	X45				Target position change command	Target position change command
	X46				Step start information command	Step start information command
	X47				Positioning start command k10	Positioning start command k10
	X48				Override initialization value command	Override initialization value command
	X4A				Current value changing command	—
	X4B				PLC READY ON	PLC READY ON
	X4C				Error reset clear command	Error reset clear command
	X4D				For unit (degree)	For unit (degree)
	X4E				Positioning start signal command (Y start)	Positioning start command being given
	X4F				All axis servo ON command	All axis servo ON command

Device name	Device				Application	Details when ON
	Axis 1	Axis 2	Axis 3	Axis 4		
Internal relay	M0	—			HPR request OFF command	Commanding HPR request OFF
	M1				HPR request OFF command pulse	HPR request OFF commanded
	M2				HPR request OFF command storage	HPR request OFF command held
	M3				Fast HPR command	Commanding fast HPR
	M4				Fast HPR command storage	Fast HPR command held
	M5				Positioning start command pulse	Positioning start commanded
	M6				Positioning start command storage	Positioning start command held
	M7				In-JOG/Inching operation flag	In-JOG/Inching operation flag
	M8				Manual pulse generator operation enable command	Commanding manual pulse generator operation enable
	M9				Manual pulse generator operating flag	Manual pulse generator operating flag
	M10				Manual pulse generator operation disable command	Commanding manual pulse generator operation disable
	M11				Speed change command pulse	Speed change commanded
	M12				Speed change command storage	Speed change command held
	M13				Override command	Requesting override
	M14				Acceleration/deceleration time change command	Requesting acceleration/deceleration time change
	M15				Torque change command	Requesting torque change
	M16				Step operation command pulse	Step operation commanded
	M17				Skip command pulse	Skip commanded
	M18				Skip command storage	Skip command held
	M19				Teaching command pulse	Teaching commanded
	M20				Teaching command storage	Teaching command held
	M21				Continuous operation interrupt command	Requesting continuous operation interrupt
	M22				Restart command	Requesting restart
	M23				Restart command storage	Restart command held
	M24				Parameter initialization command pulse	Parameter initialization commanded
	M25				Parameter initialization command storage	Parameter initialization command held
	M26				Flash ROM write command pulse	Flash ROM write commanded
	M27				Flash ROM write command storage	Flash ROM write command held
	M28	—			Error reset	Error reset completed
	M29				Stop command pulse	Stop commanded
	M30				Target position change command pulse	Target position change commanded
	M31				Target position change command storage	Target position change command held
	M32				ZP.PSTRT1 instruction complete device	ZP.PSTRT1 instruction completed
	M33				ZP.PSTRT1 instruction error complete device	ZP.PSTRT1 instruction error completed

Device name	Device				Application	Details when ON
	Axis 1	Axis 2	Axis 3	Axis 4		
Internal relay	M34	—			ZP.TEACH1 instruction complete device	ZP.TEACH1 instruction completed
	M35				ZP.TEACH1 instruction error complete device	ZP.TEACH1 instruction error completed
	M36				ZP.PINIT instruction complete device	ZP.PINIT instruction completed
	M37				ZP.PINIT instruction error complete device	ZP.PINIT instruction error completed
	M38				ZP.PFWRT instruction complete device	ZP.PFWRT instruction completed
	M39				ZP.PFWRT instruction error complete device	ZP.PFWRT instruction error completed
	M40				Override initialization value command	Override initialization value
	M50				Parameter setting complete device	Parameter setting completed

(2) Data resisters and timers

Device name	Device				Application	Details of storage
	Axis 1	Axis 2	Axis 3	Axis 4		
Data register	D0	—			HPR request flag	[Md.31] Status: b3
	D1				Speed (low-order 16 bits)	[Cd.25] Position-speed switching control speed change register
	D2				Speed (high-order 16 bits)	
	D3				Movement amount (low-order 16 bits)	[Cd.23] Speed-position switching control movement amount change register
	D4				Movement amount (high-order 16 bits)	
	D5				Inching movement amount	[Cd.16] Inching movement amount
	D6				JOG operation speed (low-order 16 bits)	[Cd.17] JOG speed
	D7				JOG operation speed (high-order 16 bits)	
	D8				Manual pulse generator 1 pulse input magnification (low-order)	[Cd.20] Manual pulse generator 1 pulse input magnification
	D9				Manual pulse generator 1 pulse input magnification (high-order)	
	D10				Manual pulse generator operation enable	[Cd.21] Manual pulse generator enable flag
	D11				Speed change value (low-order 16 bits)	[Cd.14] New speed value
	D12				Speed change value (high-order 16 bits)	
	D13				Speed change request	[Cd.15] Speed change request
	D14				Override value	[Cd.13] Positioning operation speed override

Device name	Device				Application	Details of storage
	Axis 1	Axis 2	Axis 3	Axis 4		
Data register	D15	—			Acceleration time setting (low-order 16 bits)	[Cd.10] New acceleration time value
	D16				Acceleration time setting (high-order 16 bits)	
	D17				Deceleration time setting (low-order 16 bits)	[Cd.11] New deceleration time value
	D18				Deceleration time setting (high-order 16 bits)	
	D19				Acceleration/deceleration time change enable	[Cd.12] Acceleration/deceleration time change value during speed change, enable/disable
	D20				Step mode	[Cd.34] Step mode
	D21				Step valid flag	[Cd.35] Step valid flag
	D22				Step start information	—
	D23				Target position (low-order 16 bits)	[Cd.27] Target position change value (New address)
	D24				Target position (high-order 16 bits)	
	D25				Target speed (low-order 16 bits)	[Cd.28] Target position change value (New speed)
	D26				Target speed (high-order 16 bits)	
	D27				Target position change request	[Cd.29] Target position change request flag
	D30				ZP.PSTRT1 instruction control data	—
	D31				Completion status	—
	D32				Start number	—
	D33				ZP.TEACH1 instruction control data	—
	D34				Completion status	—
	D35				Teaching data	—
	D36				Positioning data No.	—
	D37				ZP.PINIT instruction control data	—
	D38				Completion status	—
	D39				ZP.PFWRT instruction control data	—
	D40				Completion status	—
	D50				Unit setting	[Pr.1] Unit setting
	D51				Unit magnification	[Pr.4] Unit magnification (AM)

Device name	Device				Application		Details of storage
	Axis 1	Axis 2	Axis 3	Axis 4			
Data register	D52	—			Number of pulses per rotation (low-order 16 bits)		[Pr.2] Number of pulses per rotation (AP)
	D53				Number of pulses per rotation (high-order 16 bits)		
	D54				Movement amount per rotation (low-order 16 bits)		[Pr.3] Movement amount per rotation (AL)
	D55				Movement amount per rotation (high-order 16 bits)		
	D56				Bias speed at start (low-order 16 bits)		[Pr.7] Bias speed at start
	D57				Bias speed at start (high-order 16 bits)		
	D68				Block start data (Block 0)	Point 1 (shape, start No.)	[Da.11] Shape [Da.12] Start data No. [Da.13] Special start instruction [Da.14] Parameter
	D69					Point 2 (shape, start No.)	
	D70					Point 3 (shape, start No.)	
	D71					Point 4 (shape, start No.)	
	D72					Point 5 (shape, start No.)	
	D73					Point 1 (special start instruction)	
	D74					Point 2 (special start instruction)	
	D75					Point 3 (special start instruction)	
	D76					Point 4 (special start instruction)	
	D77					Point 5 (special start instruction)	
	D78				Torque change value		—
	D79				Error code		[Md.23] Axis error No.
	D80				Servo series		[Pr.100] Servo series
	D81				Absolute position system valid/invalid		Absolute position detection system (PA03)
	D85				Return home position method		[Pr.43] HPR method
	D100				Positioning identifier		Data No.1 [Da.1] Operation pattern [Da.2] Control method [Da.3] Acceleration time No. [Da.4] Deceleration time No. [Da.5] Axis to be interpolated [Da.6] Positioning address/ movement amount [Da.7] Arc address [Da.8] Command speed [Da.9] Dwell time/JUMP destination positioning data No. [Da.10] M code/Condition data No./Number of LOOP to LEND repetitions
	D101				M code		
	D102				Dwell time		
	D103				Dummy		
	D104				Command speed (low-order 16 bits)		
	D105				Command speed (high-order 16 bits)		
	D106				Positioning address (low-order 16 bits)		
	D107				Positioning address (high-order 16 bits)		
	D108				Arc address (low-order 16 bits)		
	D109				Arc address (high-order 16 bits)		

Device name	Device				Application	Details of storage
	Axis 1	Axis 2	Axis 3	Axis 4		
Data register	D110	—			Positioning identifier	Data No.2 [Da.1] Operation pattern [Da.2] Control method [Da.3] Acceleration time No. [Da.4] Deceleration time No. [Da.5] Axis to be interpolated [Da.6] Positioning address/ movement amount [Da.7] Arc address [Da.8] Command speed [Da.9] Dwell time/JUMP destination positioning data No. [Da.10] M code/Condition data No./Number of LOOP to LEND repetitions
	D111				M code	
	D112				Dwell time	
	D113				Dummy	
	D114				Command speed (low-order 16 bits)	
	D115				Command speed (high-order 16 bits)	
	D116				Positioning address (low-order 16 bits)	
	D117				Positioning address (high-order 16 bits)	
	D118				Arc address (low-order 16 bits)	
	D119				Arc address (high-order 16 bits)	
	D120				Positioning identifier	Data No.3 [Da.1] Operation pattern [Da.2] Control method [Da.3] Acceleration time No. [Da.4] Deceleration time No. [Da.5] Axis to be interpolated [Da.6] Positioning address/ movement amount [Da.7] Arc address [Da.8] Command speed [Da.9] Dwell time/JUMP destination positioning data No. [Da.10] M code/Condition data No./Number of LOOP to LEND repetitions
	D121				M code	
	D122				Dwell time	
	D123				Dummy	
	D124				Command speed (low-order 16 bits)	
	D125				Command speed (high-order 16 bits)	
	D126				Positioning address (low-order 16 bits)	
	D127				Positioning address (high-order 16 bits)	
	D128				Arc address (low-order 16 bits)	
	D129				Arc address (high-order 16 bits)	
	D130				Positioning identifier	Data No.4 [Da.1] Operation pattern [Da.2] Control method [Da.3] Acceleration time No. [Da.4] Deceleration time No. [Da.5] Axis to be interpolated [Da.6] Positioning address/ movement amount [Da.7] Arc address [Da.8] Command speed [Da.9] Dwell time/JUMP destination positioning data No. [Da.10] M code/Condition data No./Number of LOOP to LEND repetitions
	D131				M code	
	D132				Dwell time	
	D133				Dummy	
	D134				Command speed (low-order 16 bits)	
	D135				Command speed (high-order 16 bits)	
	D136				Positioning address (low-order 16 bits)	
	D137				Positioning address (high-order 16 bits)	
	D138				Arc address (low-order 16 bits)	
	D139				Arc address (high-order 16 bits)	

Device name	Device				Application	Details of storage
	Axis 1	Axis 2	Axis 3	Axis 4		
Data register	D140	—			Positioning identifier	Data No.5 [Da.1] Operation pattern [Da.2] Control method [Da.3] Acceleration time No. [Da.4] Deceleration time No. [Da.5] Axis to be interpolated [Da.6] Positioning address/ movement amount [Da.7] Arc address [Da.8] Command speed [Da.9] Dwell time/JUMP destination positioning data No. [Da.10] M code/Condition data No./Number of LOOP to LEND repetitions
	D141				M code	
	D142				Dwell time	
	D143				Dummy	
	D144				Command speed (low-order 16 bits)	
	D145				Command speed (high-order 16 bits)	
	D146				Positioning address (low-order 16 bits)	
	D147				Positioning address (high-order 16 bits)	
	D148				Arc address (low-order 16 bits)	
	D149				Arc address (high-order 16 bits)	
	D150				Positioning identifier	Data No.6 [Da.1] Operation pattern [Da.2] Control method [Da.3] Acceleration time No. [Da.4] Deceleration time No. [Da.5] Axis to be interpolated [Da.6] Positioning address/ movement amount [Da.7] Arc address [Da.8] Command speed [Da.9] Dwell time/JUMP destination positioning data No. [Da.10] M code/Condition data No./Number of LOOP to LEND repetitions
	D151				M code	
	D152				Dwell time	
	D153				Dummy	
	D154				Command speed (low-order 16 bits)	
	D155				Command speed (high-order 16 bits)	
	D156				Positioning address (low-order 16 bits)	
	D157				Positioning address (high-order 16 bits)	
	D158				Arc address (low-order 16 bits)	
	D159				Arc address (high-order 16 bits)	
	D190				Positioning identifier	Data No.10 [Da.1] Operation pattern [Da.2] Control method [Da.3] Acceleration time No. [Da.4] Deceleration time No. [Da.5] Axis to be interpolated [Da.6] Positioning address/ movement amount [Da.7] Arc address [Da.8] Command speed [Da.9] Dwell time/JUMP destination positioning data No. [Da.10] M code/Condition data No./Number of LOOP to LEND repetitions
	D191				M code	
	D192				Dwell time	
	D193				Dummy	
	D194				Command speed (low-order 16 bits)	
	D195				Command speed (high-order 16 bits)	
	D196				Positioning address (low-order 16 bits)	
	D197				Positioning address (high-order 16 bits)	
	D198				Arc address (low-order 16 bits)	
	D199				Arc address (high-order 16 bits)	

Device name	Device				Application	Details of storage
	Axis 1	Axis 2	Axis 3	Axis 4		
Data register	D200	—			Positioning identifier	Data No.11 [Da.1] Operation pattern [Da.2] Control method [Da.3] Acceleration time No. [Da.4] Deceleration time No. [Da.5] Axis to be interpolated [Da.6] Positioning address/ movement amount [Da.7] Arc address [Da.8] Command speed [Da.9] Dwell time/JUMP destination positioning data No. [Da.10] M code/Condition data No./Number of LOOP to LEND repetition
	D201				M code	
	D202				Dwell time	
	D203				Dummy	
	D204				Command speed (low-order 16 bits)	
	D205				Command speed (high-order 16 bits)	
	D206				Positioning address (low-order 16 bits)	
	D207				Positioning address (high-order 16 bits)	
	D208				Arc address (low-order 16 bits)	
	D209				Arc address (high-order 16 bits)	
	D240				Positioning identifier	Data No.15 [Da.1] Operation pattern [Da.2] Control method [Da.3] Acceleration time No. [Da.4] Deceleration time No. [Da.5] Axis to be interpolated [Da.6] Positioning address/ movement amount [Da.7] Arc address [Da.8] Command speed [Da.9] Dwell time/JUMP destination positioning data No. [Da.10] M code/Condition data No./Number of LOOP to LEND repetitions
	D241				M code	
	D242				Dwell time	
	D243				Dummy	
	D244				Command speed (low-order 16 bits)	
	D245				Command speed (high-order 16 bits)	
	D246				Positioning address (low-order 16 bits)	
	D247				Positioning address (high-order 16 bits)	
	D248				Arc address (low-order 16 bits)	
	D249				Arc address (high-order 16 bits)	
Timer	T0	—			PLC READY signal OFF confirmation	PLC READY signal OFF
	T1				PLC READY signal OFF confirmation	

Device name	Device	Application	Details of storage
Code	U0\G806	Error code	[Md.23] Axis error No.
	U0\G809	Axis operation status	[Md.26] Axis operation status
	U0\G817	Status	[Md.31] Status
	U0\G1500	Positioning start No.	[Cd.3] Positioning start No.
	U0\G1501	Positioning starting point No.	[Cd.4] Positioning starting point No.
	U0\G1502	Error reset	[Cd.5] Axis error reset
	U0\G1503	Restart command	[Cd.6] Restart command
	U0\G1504	M code OFF request (Buffer memory)	[Cd.7] M code OFF request
	U0\G1505	External command valid	[Cd.8] External command valid
	U0\G1513	Override request	[Cd.13] Positioning operation speed override
	U0\G1516	Speed change request	[Cd.15] Speed change request
	U0\G1517	Inching movement amount	[Cd.16] Inching movement amount
	U0\G1520	Interrupt request during continuous operation	[Cd.18] Interrupt request during continuous operation
	U0\G1521	HPR request flag OFF request	[Cd.19] HPR request flag OFF request
	U0\G1524	Manual pulse generator enable flag	[Cd.21] Manual pulse generator enable flag
	U0\G1526	Speed-position switching control movement amount	[Cd.23] Speed-position switching control movement amount change register
	U0\G1528	Speed-position switching enable flag	[Cd.24] Speed-position switching enable flag
	U0\G1530	Position-speed switching control speed change	[Cd.25] Position-speed switching control speed change register
	U0\G1532	Position-speed switching enable flag	[Cd.26] Position-speed switching enable flag
	U0\G1538	Target position change request flag	[Cd.29] Target position change request flag
	U0\G1544	Step mode	[Cd.34] Step mode
	U0\G1547	Skip command	[Cd.37] Skip command

6.3 Creating a program

The "positioning control operation program" actually used is explained in this chapter. The functions and programs explained in "Section 2" are assembled into the "positioning control operation program" explained here. (To monitor the control, add the required monitor program that matches the system. Refer to Section 5.6 "List of monitor data" for details on the monitor items.)

6.3.1 General configuration of program

The general configuration of the "positioning control operation program" is shown below.

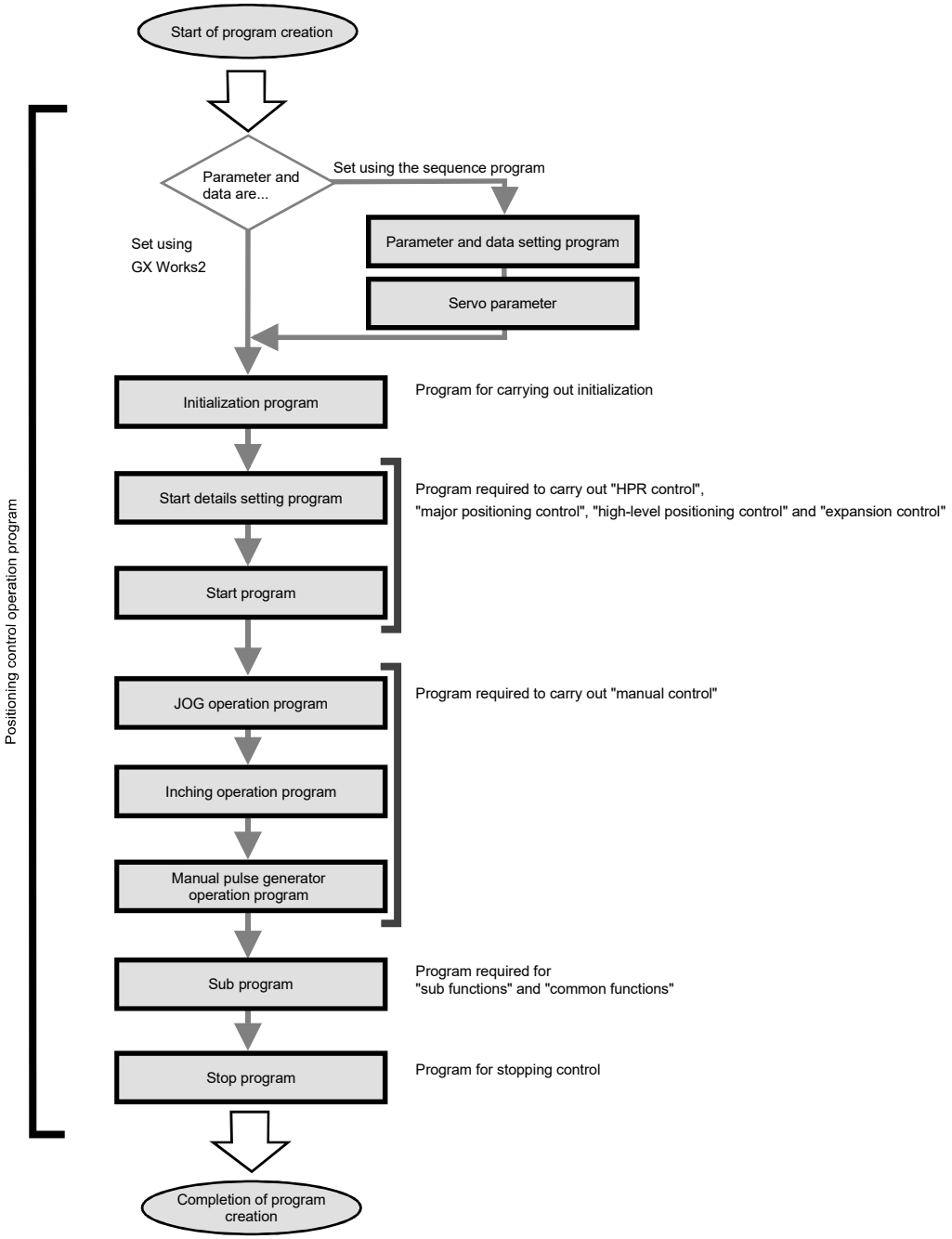

6.3.2 Positioning control operation program

The various programs that configure the "positioning control operation program" are shown below. When creating the program, refer to the explanation of each program and Section 6.4 "Positioning program examples", and create an operation program that matches the positioning system. (Numbers are assigned to the following programs. Configuring the program in the order of these numbers is recommended.)

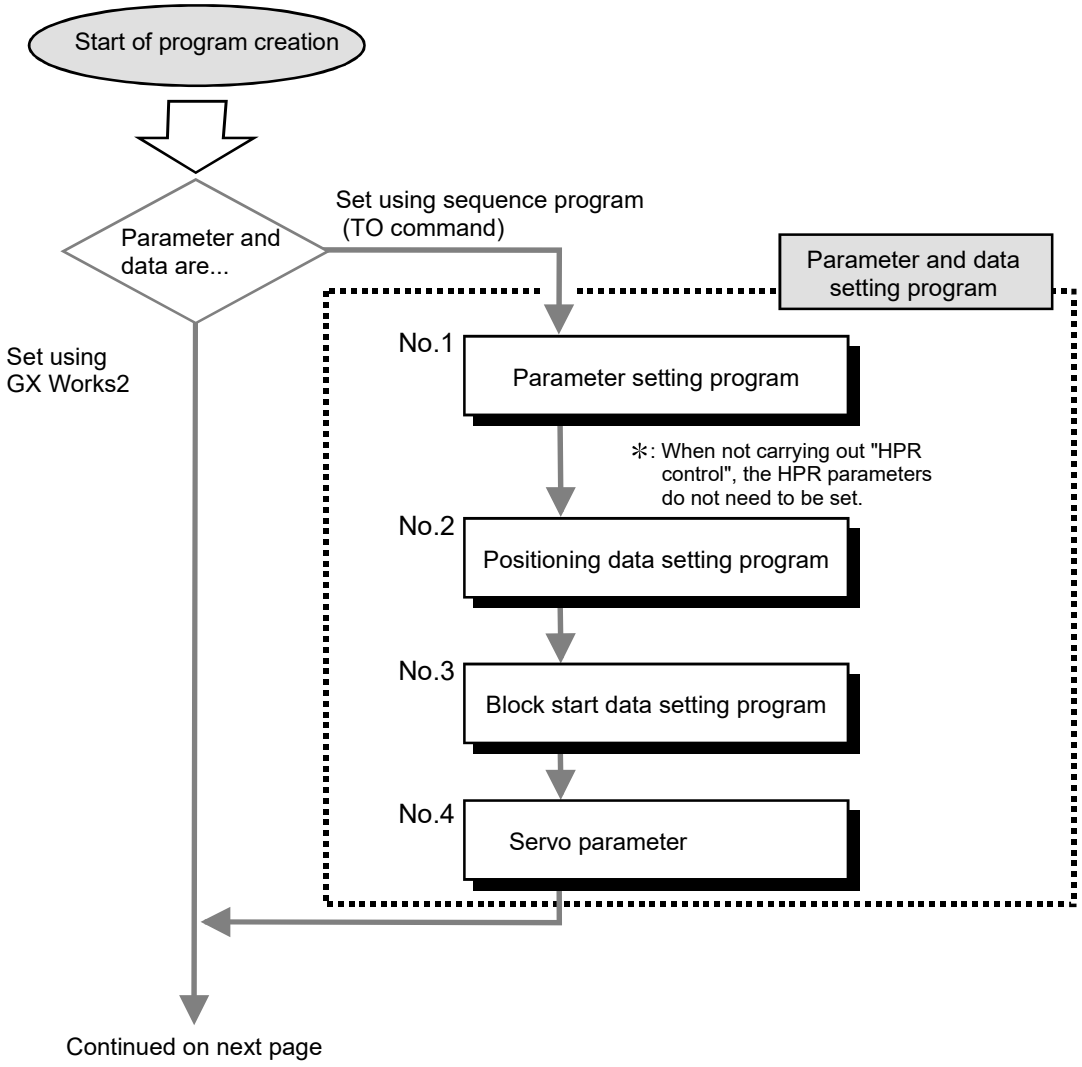

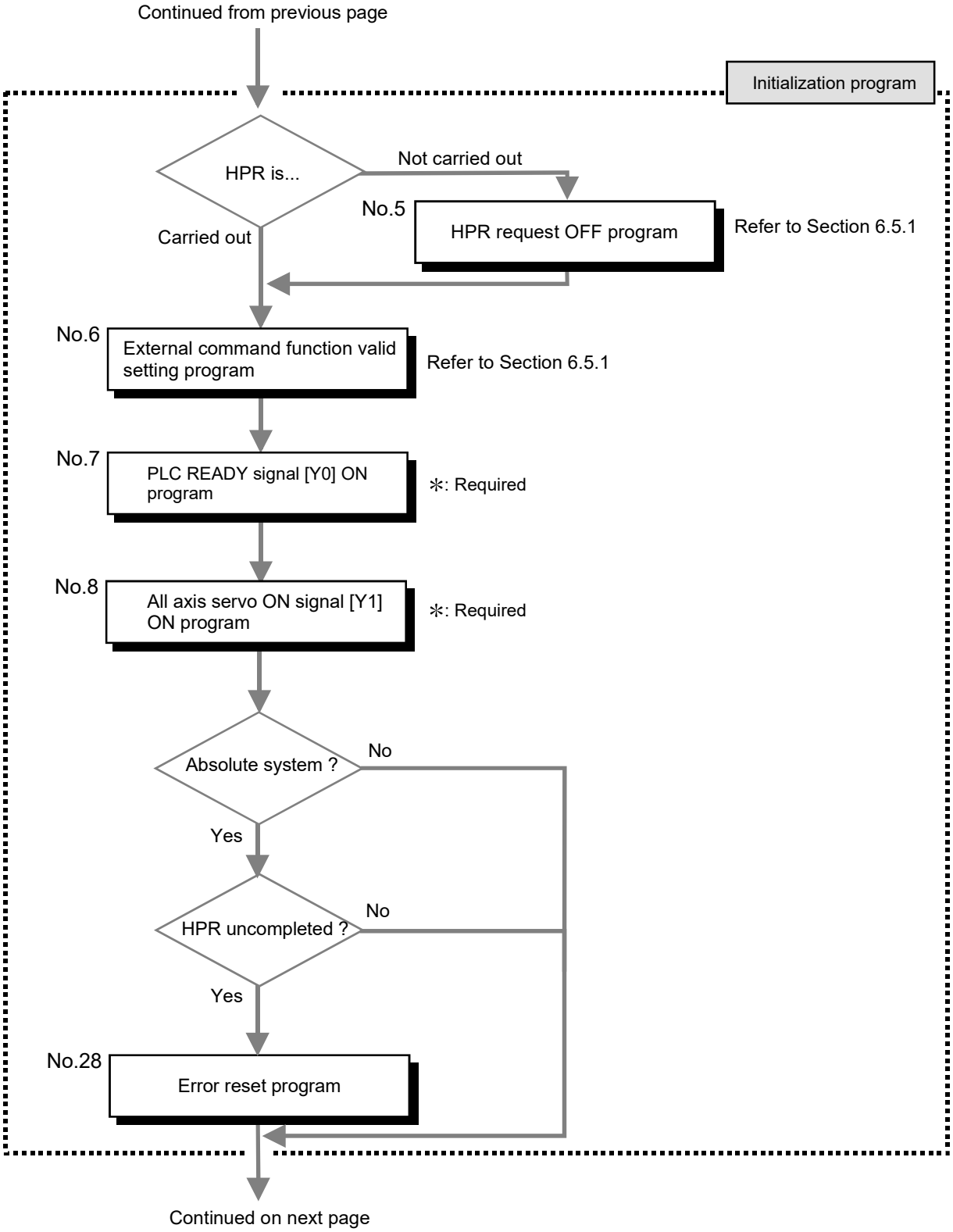
Continued from previous page
Initialization program
HPR is...
Not carried out
No.5
HPR request OFF program
Refer to Section 6.5.1
Carried out
No.6
External command function valid setting program
Refer to Section 6.5.1
No.7
PLC READY signal [Y0] ON program
*: Required
No.8
All axis servo ON signal [Y1] ON program
*: Required
Absolute system ?
No
Yes
HPR uncompleted ?
No
Yes
No.28
Error reset program
Continued on next page

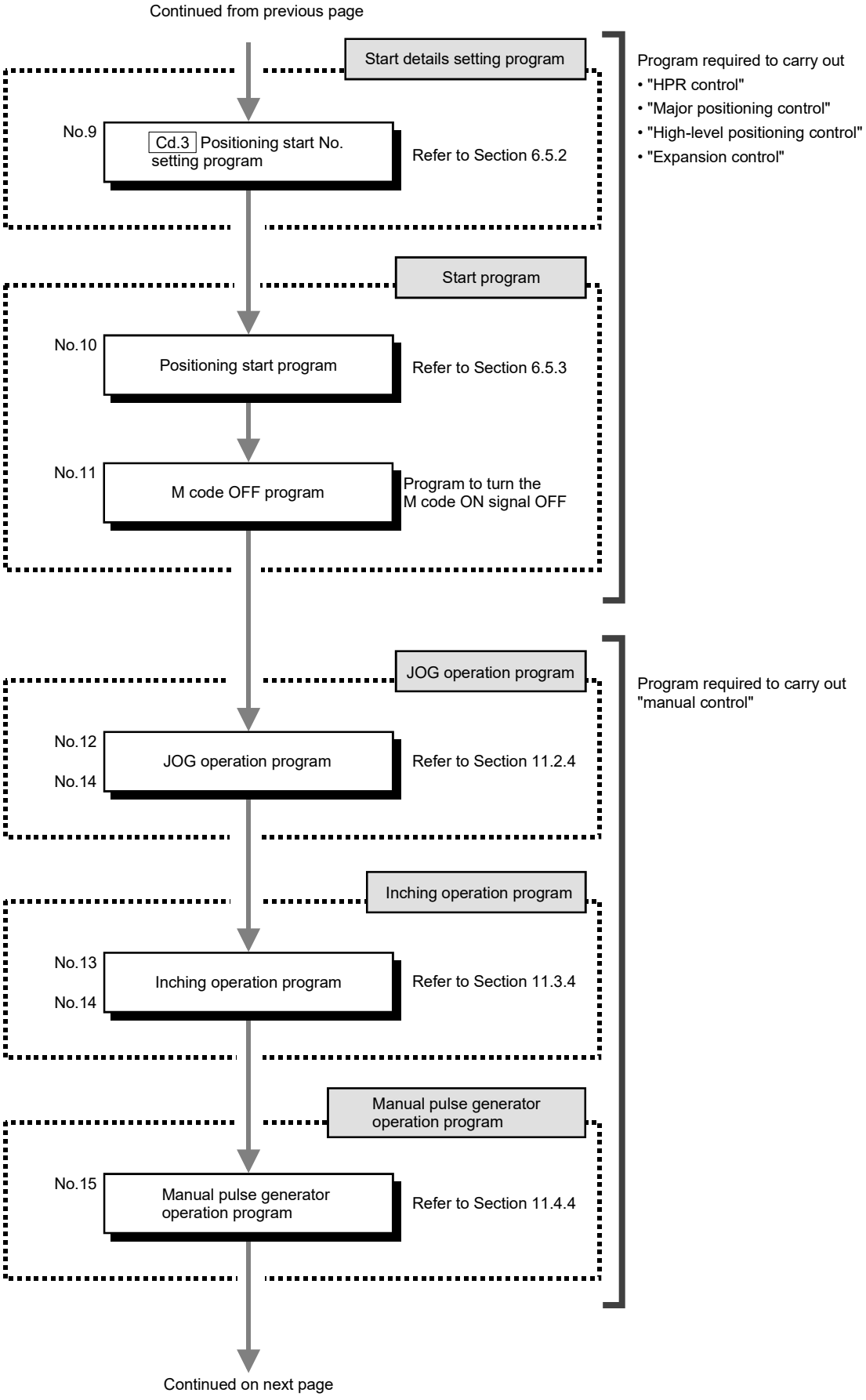
Continued from previous page
Start details setting program
No.9
Cd.3 Positioning start No. setting program
Refer to Section 6.5.2
Start program
No.10
Positioning start program
Refer to Section 6.5.3
No.11
M code OFF program
Program to turn the M code ON signal OFF
Program required to carry out
• "HPR control"
• "Major positioning control"
• "High-level positioning control"
• "Expansion control"
JOG operation program
No.12
No.14
JOG operation program
Refer to Section 11.2.4
Inching operation program
No.13
No.14
Inching operation program
Refer to Section 11.3.4
Manual pulse generator operation program
No.15
Manual pulse generator operation program
Refer to Section 11.4.4
Program required to carry out "manual control"
Continued on next page

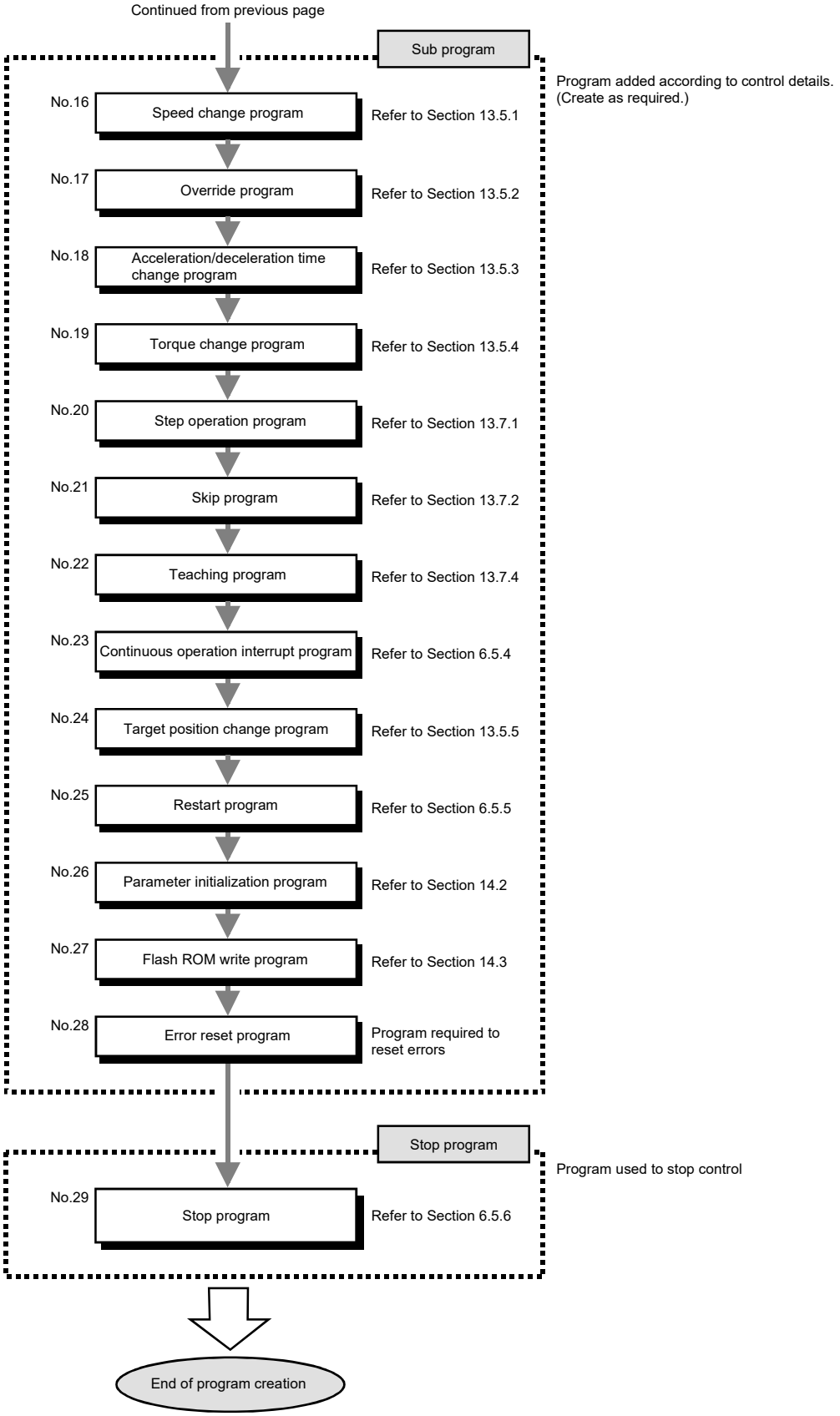
Continued from previous page
Sub program
Program added according to control details. (Create as required.)
No.16
Speed change program
Refer to Section 13.5.1
No.17
Override program
Refer to Section 13.5.2
No.18
Acceleration/deceleration time change program
Refer to Section 13.5.3
No.19
Torque change program
Refer to Section 13.5.4
No.20
Step operation program
Refer to Section 13.7.1
No.21
Skip program
Refer to Section 13.7.2
No.22
Teaching program
Refer to Section 13.7.4
No.23
Continuous operation interrupt program
Refer to Section 6.5.4
No.24
Target position change program
Refer to Section 13.5.5
No.25
Restart program
Refer to Section 6.5.5
No.26
Parameter initialization program
Refer to Section 14.2
No.27
Flash ROM write program
Refer to Section 14.3
No.28
Error reset program
Program required to reset errors
Stop program
Program used to stop control
No.29
Stop program
Refer to Section 6.5.6
End of program creation

6.4 Positioning program examples

An example of the "Axis 1" positioning program using QD77MS4 is given in this section.

[No. 1] to [No. 4] parameter and data setting program
* When setting the parameters or data with the sequence program, set them in the Simple Motion module using the TO command from the PLC CPU. (Carry out the settings while the PLC READY signal [Y0] is OFF.)
* When setting the parameters or data with GX Works2, the [No. 1] to [No. 4] program is not necessary.

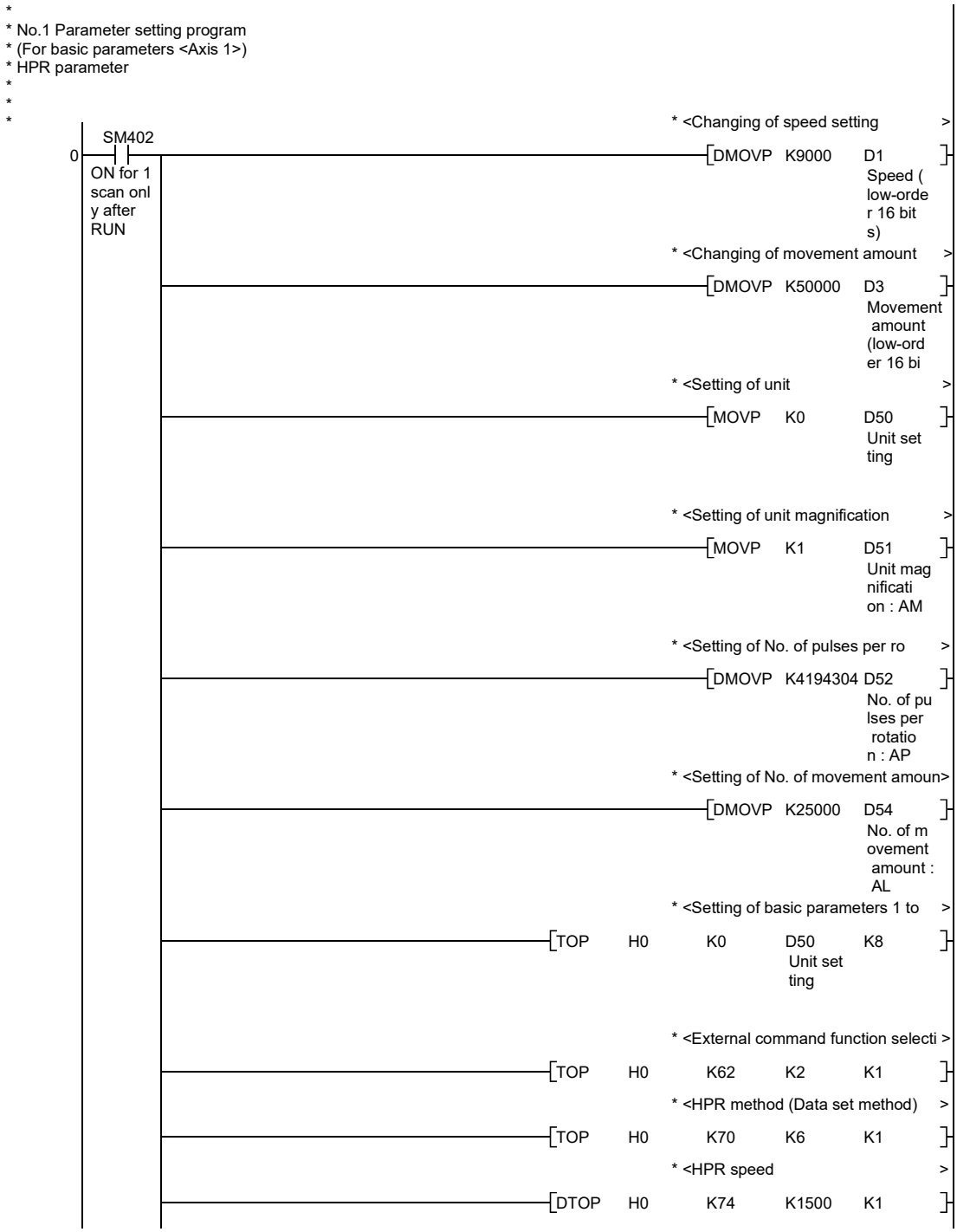

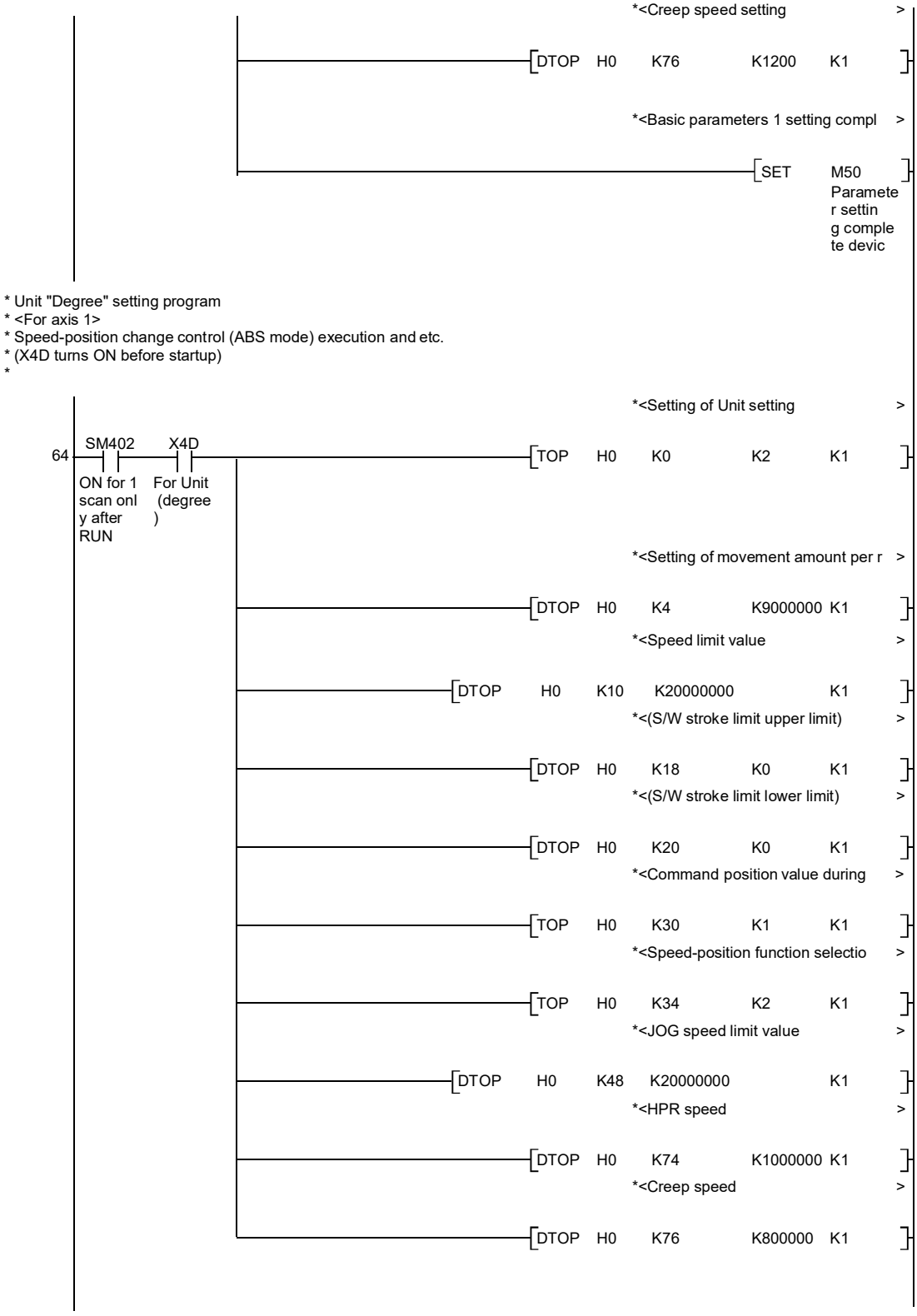
*<Creep speed setting >
DTOP H0 K76 K1200 K1
*<Basic parameters 1 setting compl >
SET M50
Parameter setting complete devic
* Unit "Degree" setting program
* <For axis 1>
* Speed-position change control (ABS mode) execution and etc.
* (X4D turns ON before startup)
*
*<Setting of Unit setting >
64
SM402
ON for 1 scan only after RUN
X4D
For Unit (degree)
TOP H0 K0 K2 K1
*<Setting of movement amount per r >
DTOP H0 K4 K9000000 K1
*<Speed limit value >
DTOP H0 K10 K20000000 K1
*<(S/W stroke limit upper limit) >
DTOP H0 K18 K0 K1
*<(S/W stroke limit lower limit) >
DTOP H0 K20 K0 K1
*<Command position value during >
TOP H0 K30 K1 K1
*<Speed-position function selectio >
TOP H0 K34 K2 K1
*<JOG speed limit value >
DTOP H0 K48 K20000000 K1
*<HPR speed >
DTOP H0 K74 K1000000 K1
*<Creep speed >
DTOP H0 K76 K800000 K1

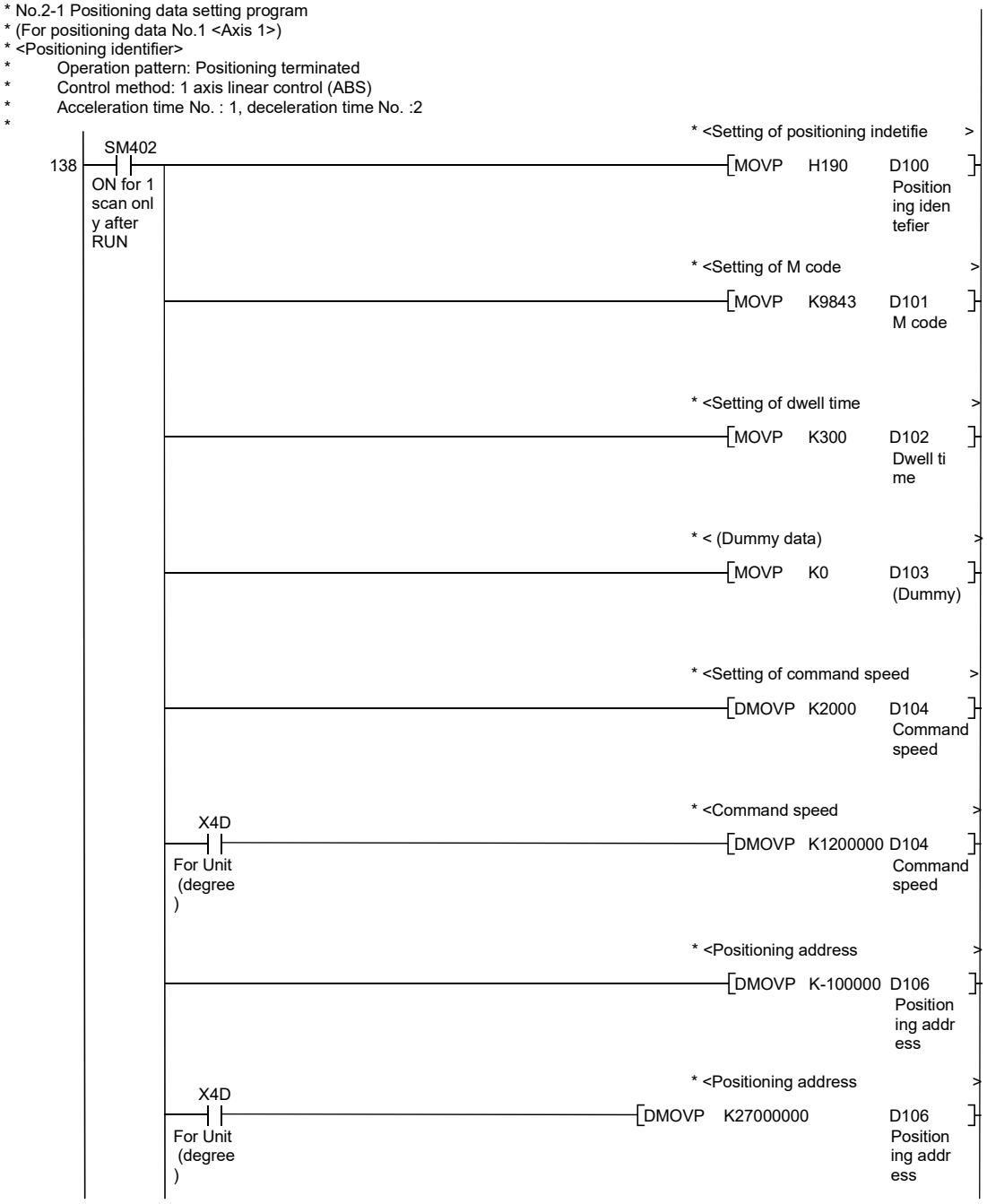
*
* No.2-1 Positioning data setting program
* (For positioning data No.1 <Axis 1>)
* <Positioning identifier>
* Operation pattern: Positioning terminated
* Control method: 1 axis linear control (ABS)
* Acceleration time No. : 1, deceleration time No. :2
*
138
SM402
ON for 1 scan only after RUN
* <Setting of positioning indetifie >
MOVP H190 D100 Positioning identefier
* <Setting of M code >
MOVP K9843 D101 M code
* <Setting of dwell time >
MOVP K300 D102 Dwell time
* < (Dummy data) >
MOVP K0 D103 (Dummy)
* <Setting of command speed >
DMOVP K2000 D104 Command speed
* <Command speed >
X4D
For Unit (degree)
DMOVP K1200000 D104 Command speed
* <Positioning address >
DMOVP K-100000 D106 Positioning address
* <Positioning address >
X4D
For Unit (degree)
DMOVP K27000000 D106 Positioning address

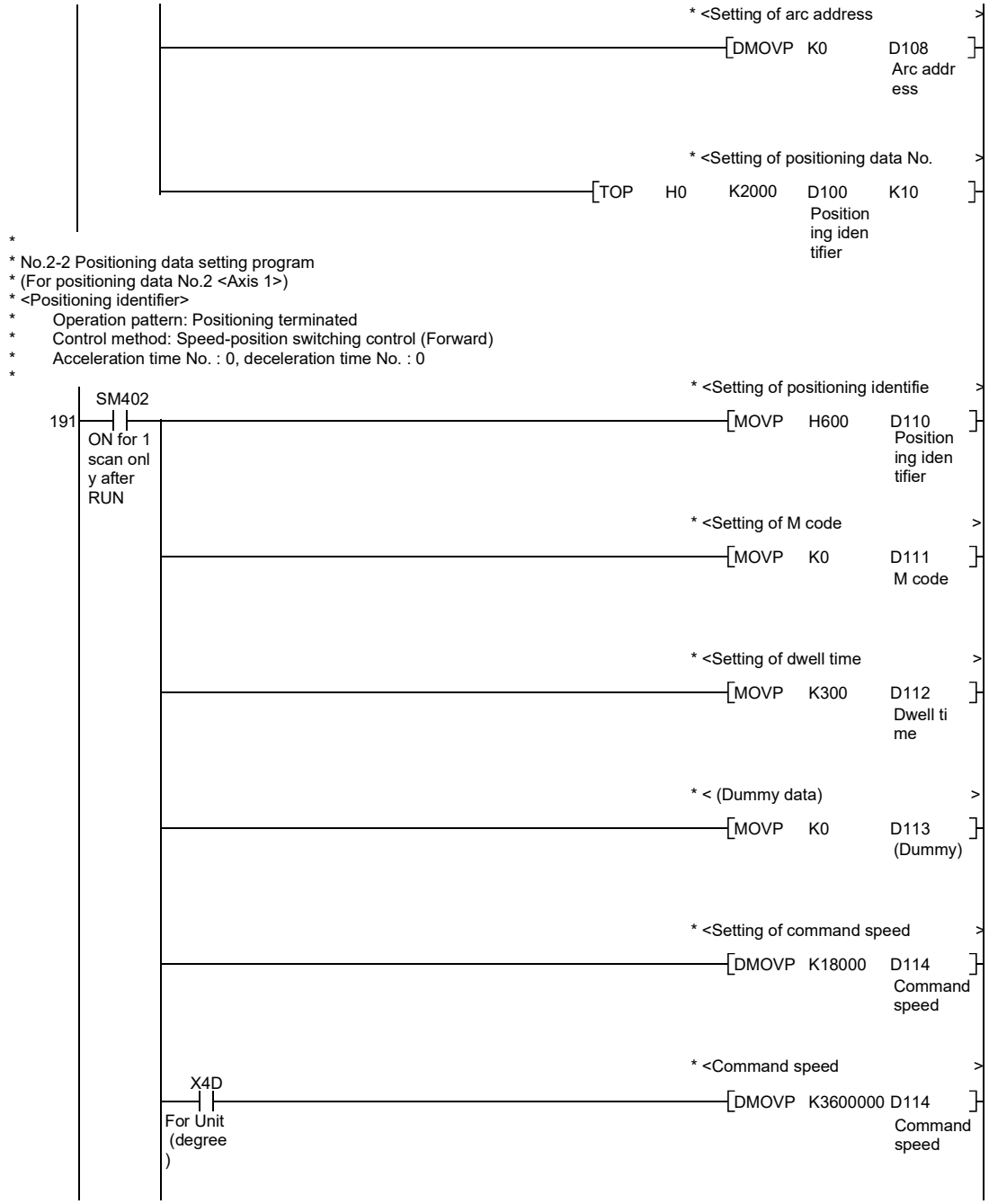
* <Setting of arc address >
DMOVP K0 D108
Arc addr ess
* <Setting of positioning data No. >
TOP H0 K2000 D100 K10
Position ing iden tifier
*
* No.2-2 Positioning data setting program
* (For positioning data No.2 <Axis 1>)
* <Positioning identifier>
* Operation pattern: Positioning terminated
* Control method: Speed-position switching control (Forward)
* Acceleration time No. : 0, deceleration time No. : 0
*
* <Setting of positioning identifie >
SM402
191
ON for 1 scan onl y after RUN
MOVP H600 D110
Position ing iden tifier
* <Setting of M code >
MOVP K0 D111
M code
* <Setting of dwell time >
MOVP K300 D112
Dwell ti me
* < (Dummy data) >
MOVP K0 D113
(Dummy)
* <Setting of command speed >
DMOVP K18000 D114
Command speed
* <Command speed >
X4D
For Unit (degree)
DMOVP K3600000 D114
Command speed

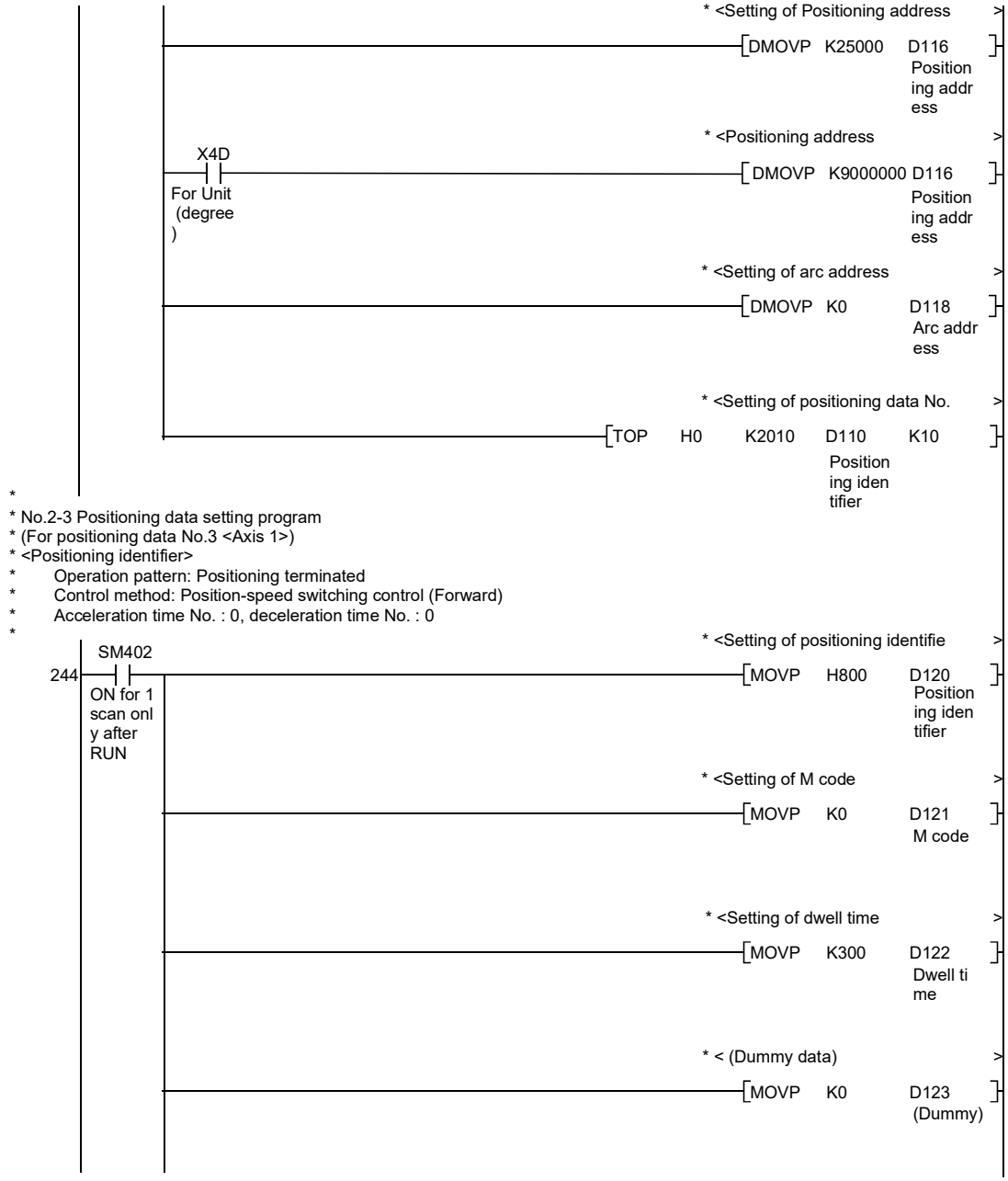
* <Setting of Positioning address >
DMOVP K25000 D116
Positioning address
* <Positioning address >
X4D
For Unit (degree)
DMOVP K9000000 D116
Positioning address
* <Setting of arc address >
DMOVP K0 D118
Arc address
* <Setting of positioning data No. >
TOP H0 K2010 D110 K10
Positioning identifier
*
* No.2-3 Positioning data setting program
* (For positioning data No.3 <Axis 1>)
* <Positioning identifier>
* Operation pattern: Positioning terminated
* Control method: Position-speed switching control (Forward)
* Acceleration time No. : 0, deceleration time No. : 0
*
* <Setting of positioning identifie >
SM402
244
ON for 1 scan only after RUN
MOVP H800 D120
Positioning identifier
* <Setting of M code >
MOVP K0 D121
M code
* <Setting of dwell time >
MOVP K300 D122
Dwell time
* < (Dummy data) >
MOVP K0 D123
(Dummy)

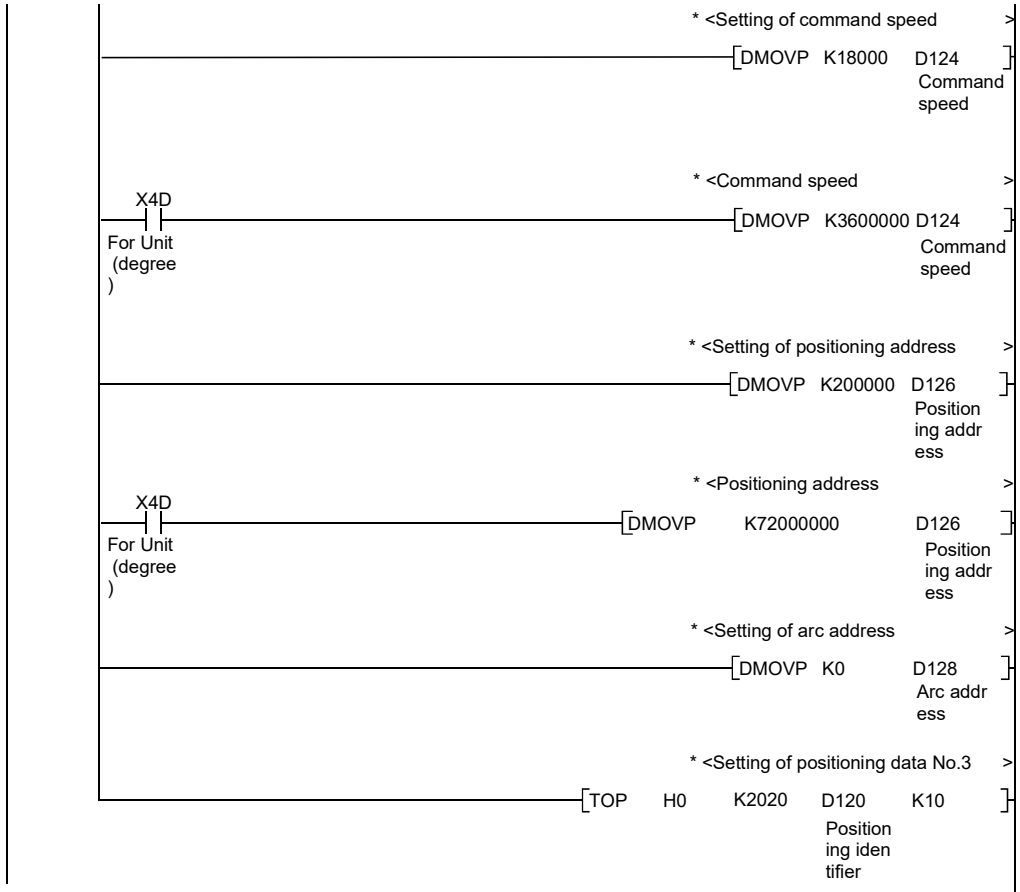


```
*
* No.2-4 Positioning data setting program
* (For positioning data No.4 <Axis 1>)
* <Positioning identifier>
*       Operation pattern: Positioning terminated
*       Control method: 1-axis linear control (INC)
*       Acceleration time No. : 0, deceleration time No. : 0
*
```

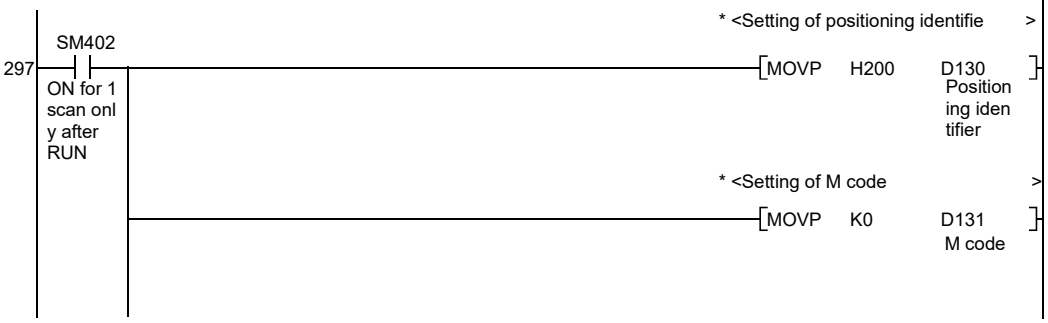

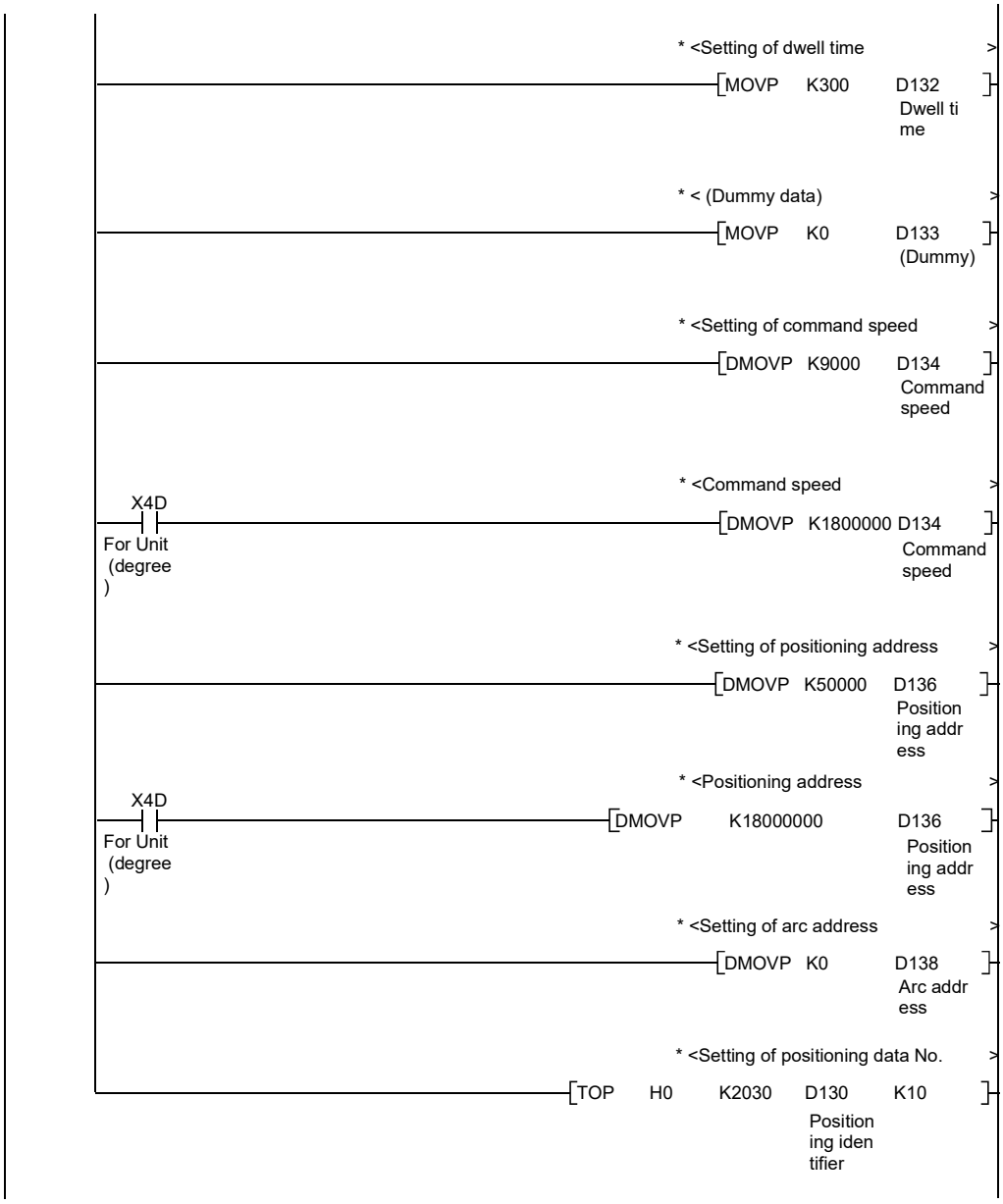
* <Setting of dwell time >
MOVP K300 D132
Dwell ti me
* < (Dummy data) >
MOVP K0 D133
(Dummy)
* <Setting of command speed >
DMOVP K9000 D134
Command speed
* <Command speed >
X4D
For Unit (degree)
DMOVP K1800000 D134
Command speed
* <Setting of positioning address >
DMOVP K50000 D136
Position ing addr ess
* <Positioning address >
X4D
For Unit (degree)
DMOVP K18000000 D136
Position ing addr ess
* <Setting of arc address >
DMOVP K0 D138
Arc addr ess
* <Setting of positioning data No. >
TOP H0 K2030 D130 K10
Position ing iden tifier

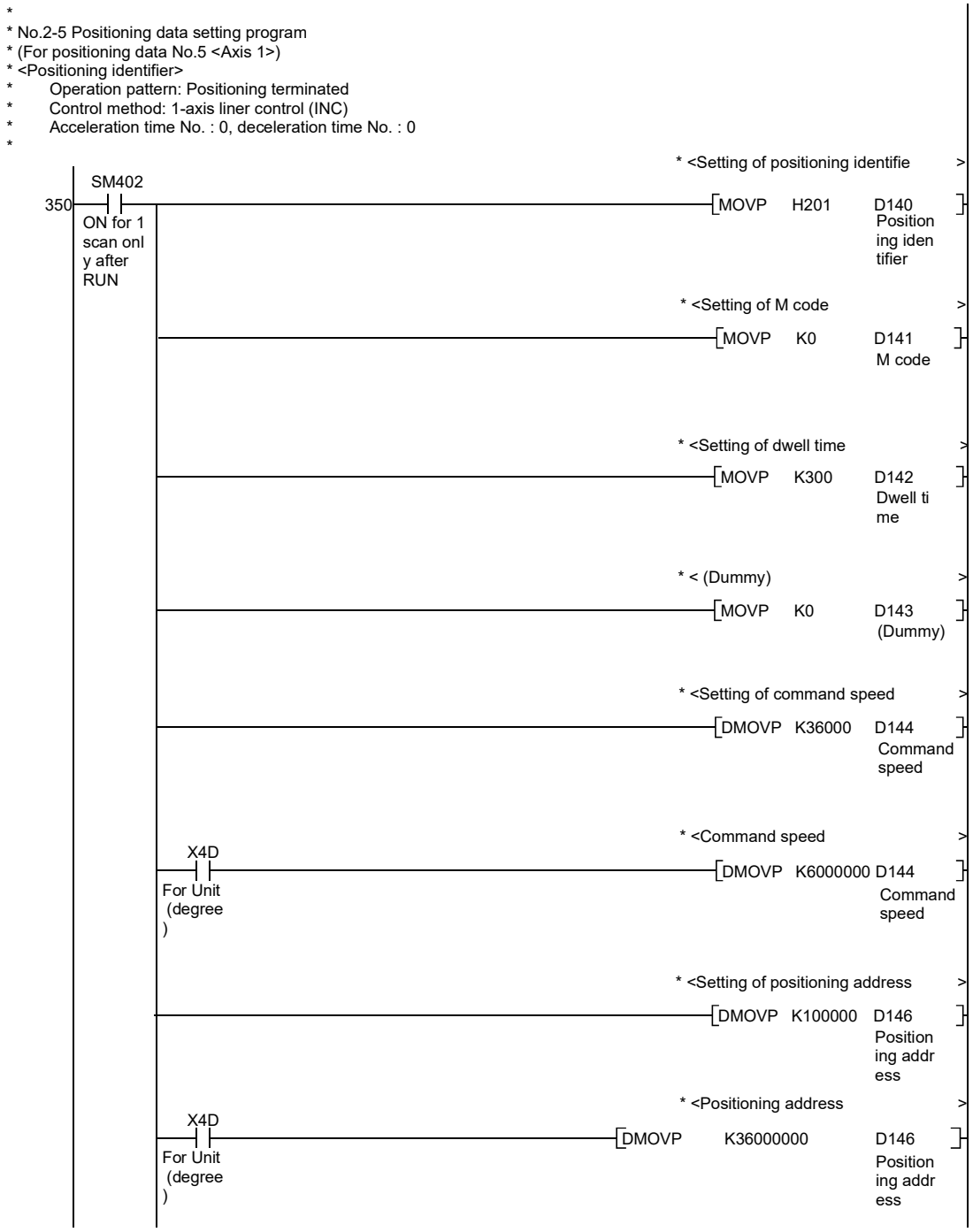
*
* No.2-5 Positioning data setting program
* (For positioning data No.5 <Axis 1>)
* <Positioning identifier>
* Operation pattern: Positioning terminated
* Control method: 1-axis liner control (INC)
* Acceleration time No. : 0, deceleration time No. : 0
*
* <Setting of positioning identifie >
SM402
350
ON for 1 scan onl y after RUN
MOVP H201 D140
Position ing iden tifier
* <Setting of M code >
MOVP K0 D141
M code
* <Setting of dwell time >
MOVP K300 D142
Dwell ti me
* < (Dummy) >
MOVP K0 D143
(Dummy)
* <Setting of command speed >
DMOVP K36000 D144
Command speed
* <Command speed >
X4D
For Unit (degree)
DMOVP K6000000 D144
Command speed
* <Setting of positioning address >
DMOVP K100000 D146
Position ing addr ess
* <Positioning address >
X4D
For Unit (degree)
DMOVP K36000000 D146
Position ing addr ess

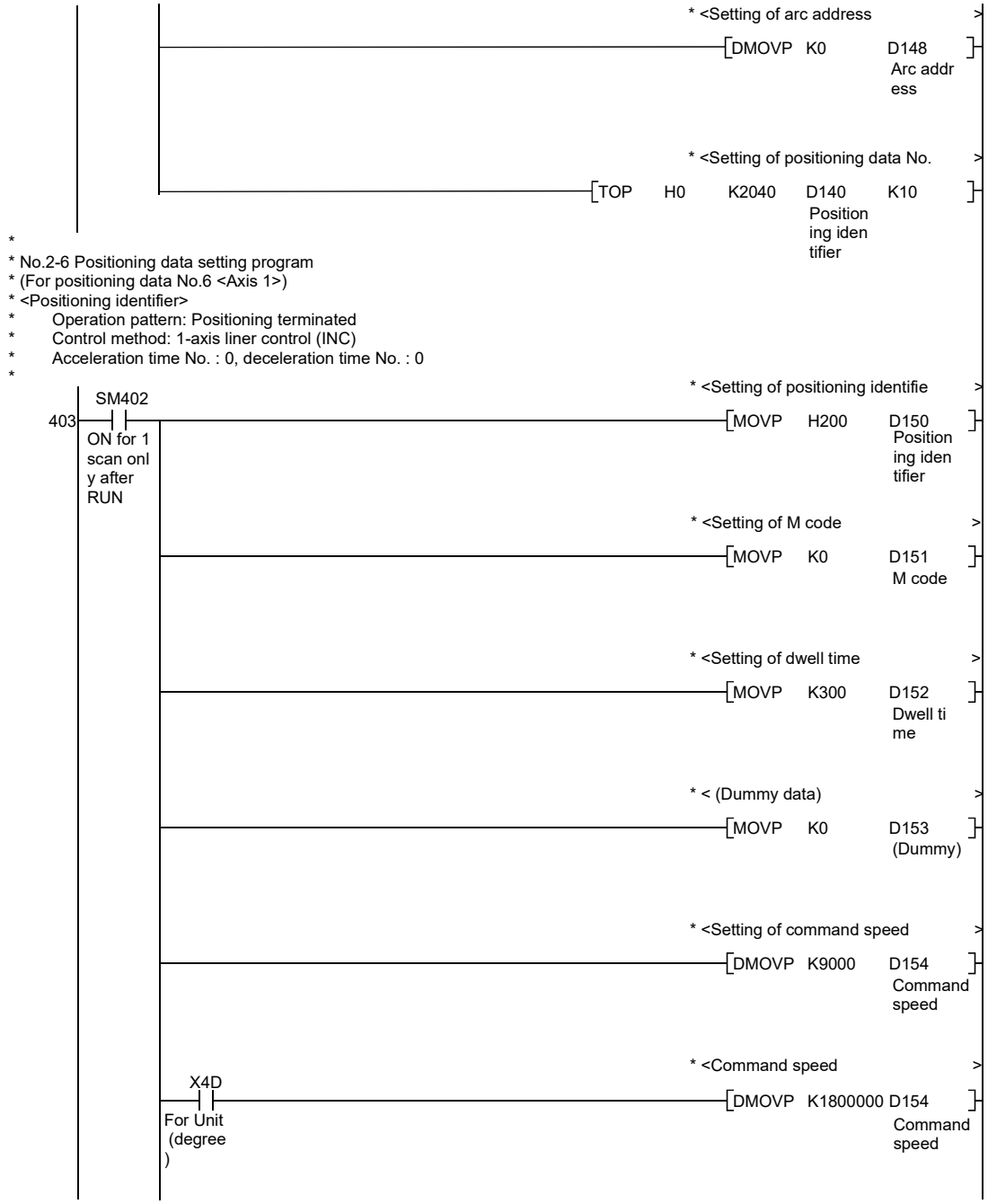
* <Setting of arc address >
DMOVP K0 D148
Arc addr ess
* <Setting of positioning data No. >
TOP H0 K2040 D140 K10
Position ing iden tifier
*
* No.2-6 Positioning data setting program
* (For positioning data No.6 <Axis 1>)
* <Positioning identifier>
* Operation pattern: Positioning terminated
* Control method: 1-axis liner control (INC)
* Acceleration time No. : 0, deceleration time No. : 0
*
* <Setting of positioning identifie >
SM402
403
ON for 1 scan onl y after RUN
MOVP H200 D150
Position ing iden tifier
* <Setting of M code >
MOVP K0 D151
M code
* <Setting of dwell time >
MOVP K300 D152
Dwell ti me
* < (Dummy data) >
MOVP K0 D153
(Dummy)
* <Setting of command speed >
DMOVP K9000 D154
Command speed
* <Command speed >
X4D
For Unit (degree)
DMOVP K1800000 D154
Command speed

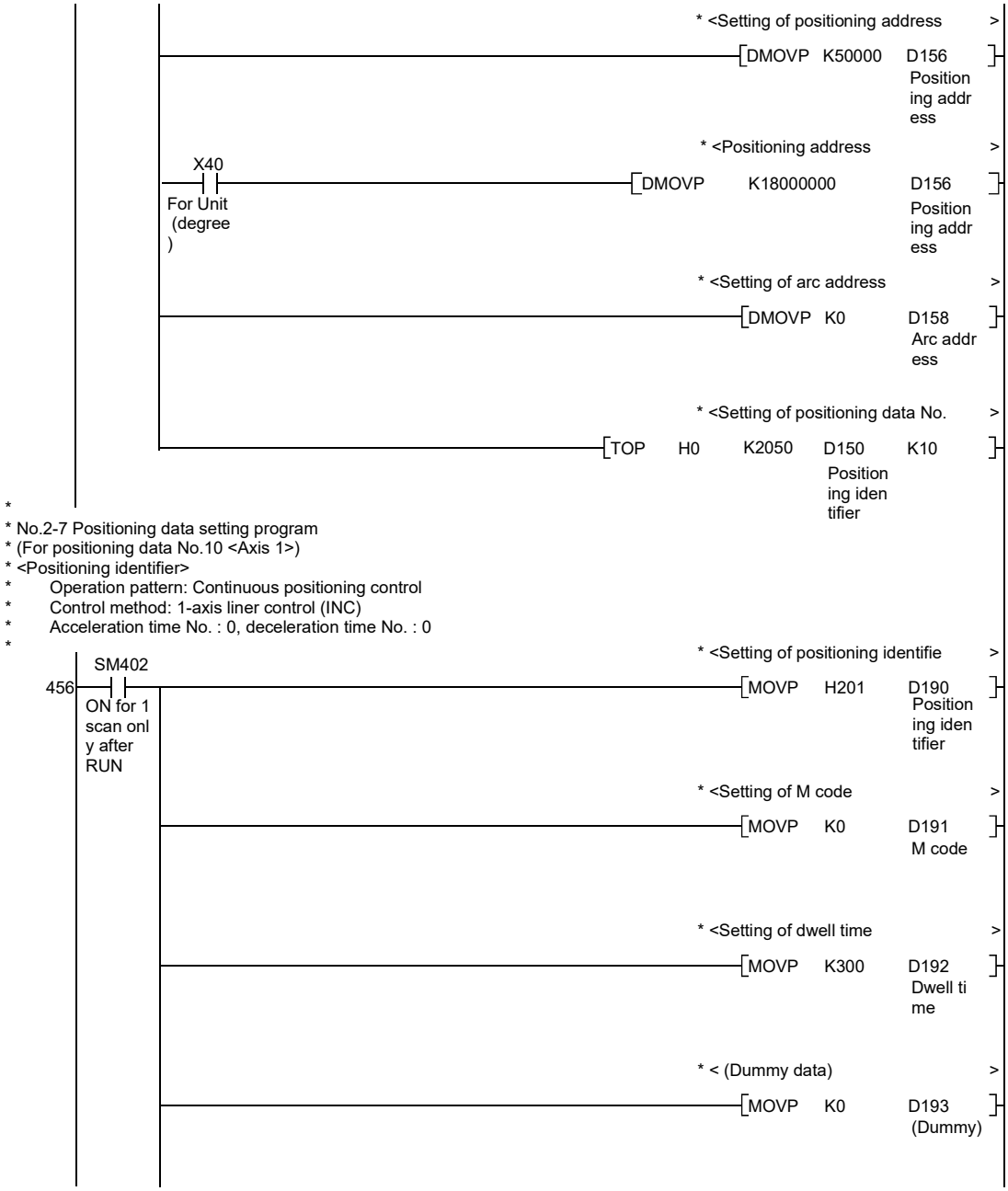
* <Setting of positioning address >
DMOVP K50000 D156
Positioning address
* <Positioning address >
X40
For Unit (degree)
DMOVP K18000000 D156
Positioning address
* <Setting of arc address >
DMOVP K0 D158
Arc address
* <Setting of positioning data No. >
TOP H0 K2050 D150 K10
Positioning identifier
*
* No.2-7 Positioning data setting program
* (For positioning data No.10 <Axis 1>)
* <Positioning identifier>
* Operation pattern: Continuous positioning control
* Control method: 1-axis liner control (INC)
* Acceleration time No. : 0, deceleration time No. : 0
*
* <Setting of positioning identifie >
456
SM402
ON for 1 scan only after RUN
MOVP H201 D190
Positioning identifier
* <Setting of M code >
MOVP K0 D191
M code
* <Setting of dwell time >
MOVP K300 D192
Dwell time
* < (Dummy data) >
MOVP K0 D193
(Dummy)

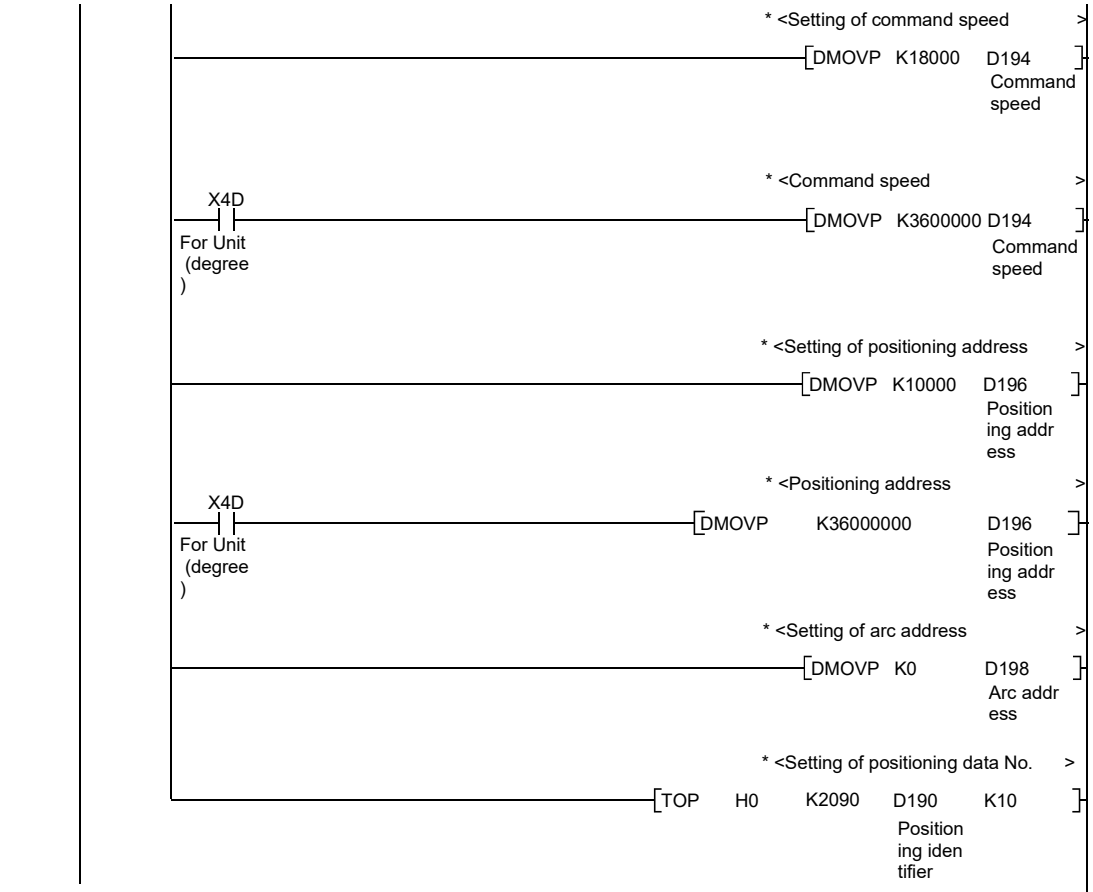


```
*
* No.2-8 Positioning data setting program
* (For positioning data No.11 <Axis 1>)
* <Positioning identifier>
*       Operation pattern: Positioning terminated
*       Control method: 1-axis liner control (INC)
*       Acceleration time No. : 0, deceleration time No. : 0
*
```

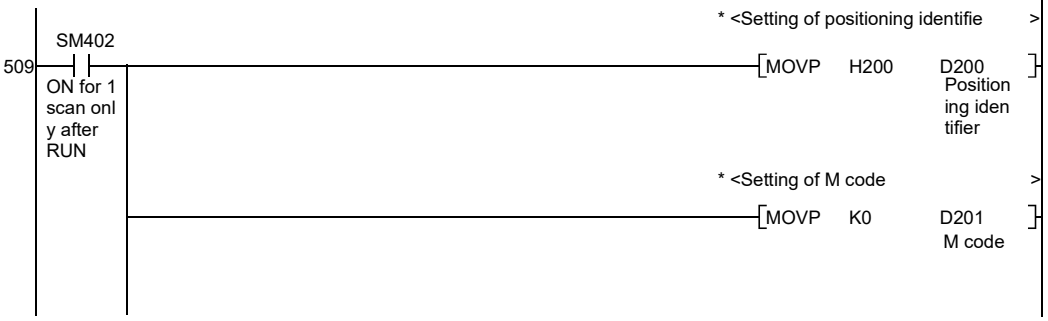

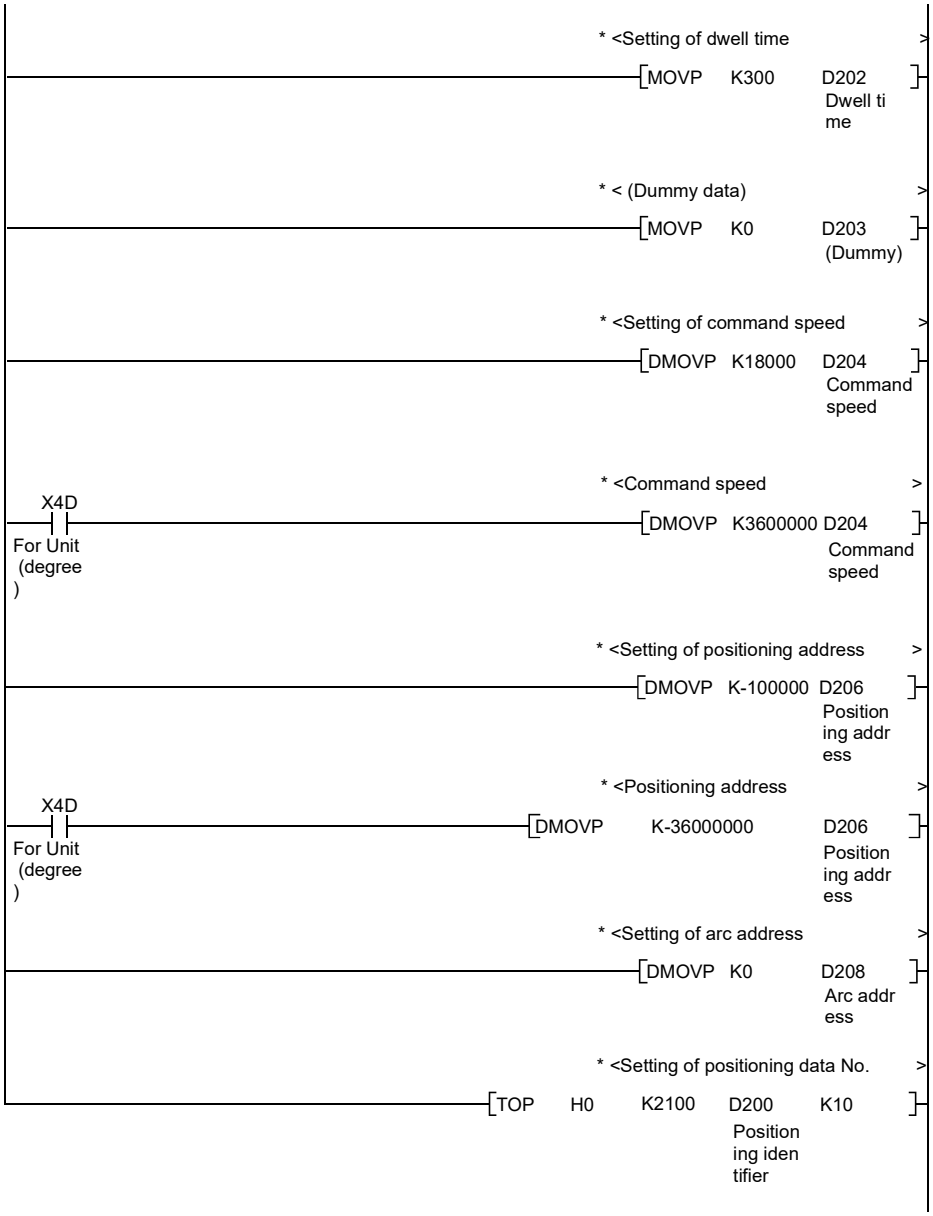
* <Setting of dwell time >
MOVP K300 D202
Dwell ti me
* < (Dummy data) >
MOVP K0 D203
(Dummy)
* <Setting of command speed >
DMOVP K18000 D204
Command speed
* <Command speed >
X4D
For Unit (degree)
DMOVP K3600000 D204
Command speed
* <Setting of positioning address >
DMOVP K-100000 D206
Position ing addr ess
* <Positioning address >
X4D
For Unit (degree)
DMOVP K-36000000 D206
Position ing addr ess
* <Setting of arc address >
DMOVP K0 D208
Arc addr ess
* <Setting of positioning data No. >
TOP H0 K2100 D200 K10
Position ing iden tifier

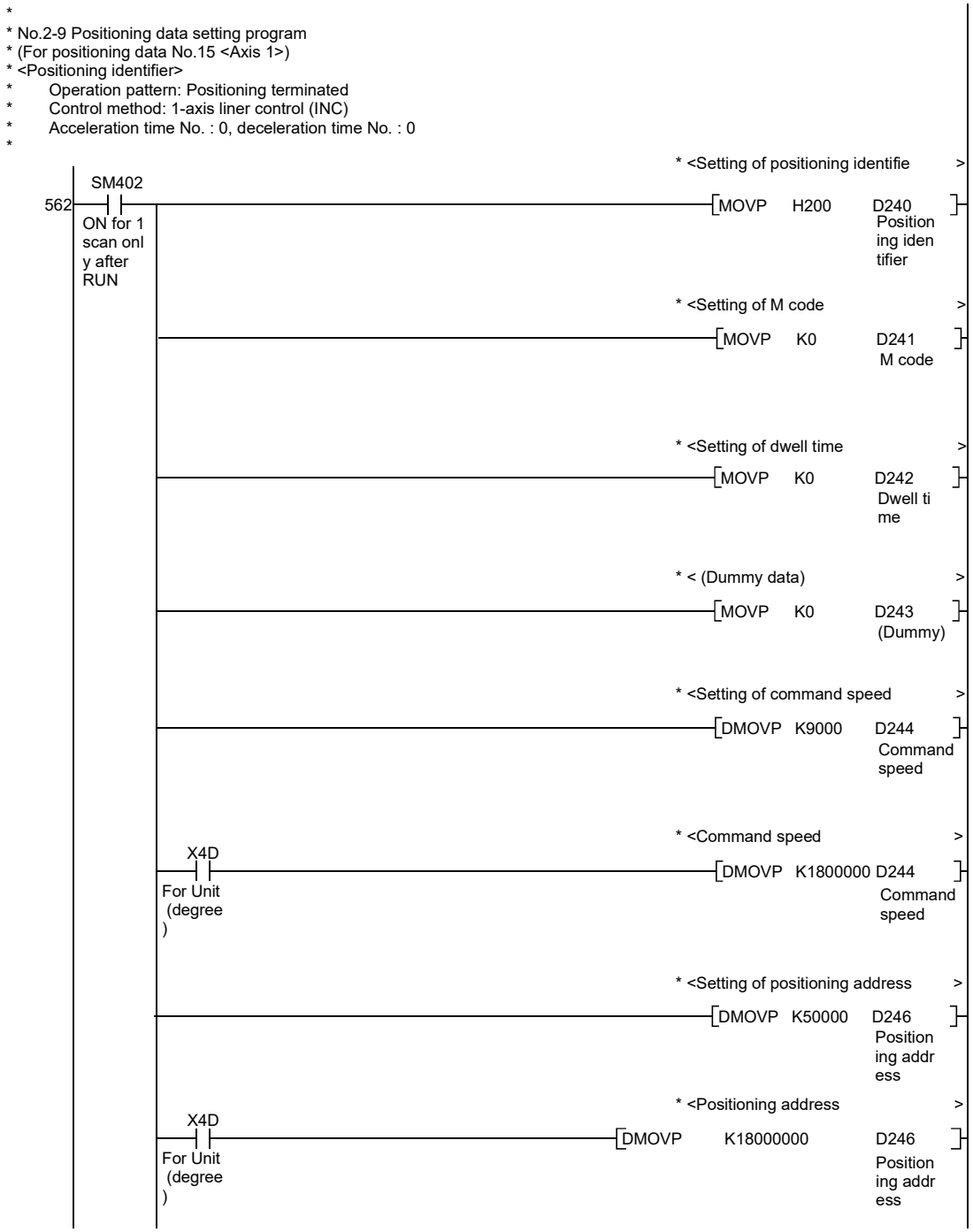
*
* No.2-9 Positioning data setting program
* (For positioning data No.15 <Axis 1>)
* <Positioning identifier>
* Operation pattern: Positioning terminated
* Control method: 1-axis liner control (INC)
* Acceleration time No. : 0, deceleration time No. : 0
*
* <Setting of positioning identifie >
SM402
562
MOVP H200 D240
ON for 1 scan onl y after RUN
Position ing iden tifier
* <Setting of M code >
MOVP K0 D241
M code
* <Setting of dwell time >
MOVP K0 D242
Dwell ti me
* < (Dummy data) >
MOVP K0 D243
(Dummy)
* <Setting of command speed >
DMOVP K9000 D244
Command speed
* <Command speed >
X4D
DMOVP K1800000 D244
For Unit (degree)
Command speed
* <Setting of positioning address >
DMOVP K50000 D246
Position ing addr ess
* <Positioning address >
X4D
DMOVP K18000000 D246
For Unit (degree)
Position ing addr ess

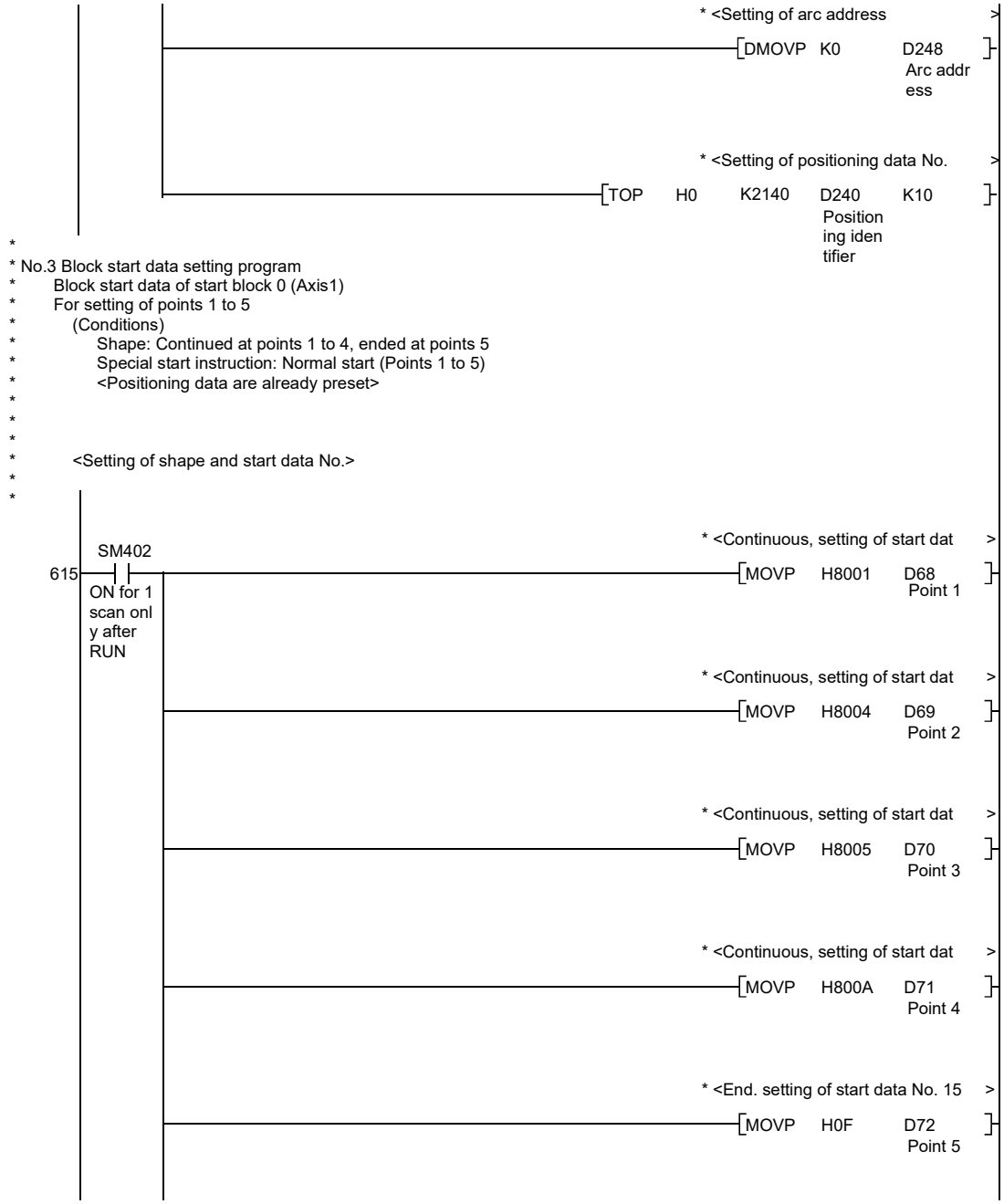
* <Setting of arc address >
DMOVP K0 D248
Arc addr
ess
* <Setting of positioning data No. >
TOP H0 K2140 D240 K10
Position
ing iden
tifier
*
* No.3 Block start data setting program
* Block start data of start block 0 (Axis1)
* For setting of points 1 to 5
* (Conditions)
* Shape: Continued at points 1 to 4, ended at points 5
* Special start instruction: Normal start (Points 1 to 5)
* <Positioning data are already preset>
*
*
*
* <Setting of shape and start data No.>
*
*
* <Continuous, setting of start dat >
615
SM402
ON for 1
scan onl
y after
RUN
MOVP H8001 D68
Point 1
* <Continuous, setting of start dat >
MOVP H8004 D69
Point 2
* <Continuous, setting of start dat >
MOVP H8005 D70
Point 3
* <Continuous, setting of start dat >
MOVP H800A D71
Point 4
* <End. setting of start data No. 15 >
MOVP H0F D72
Point 5

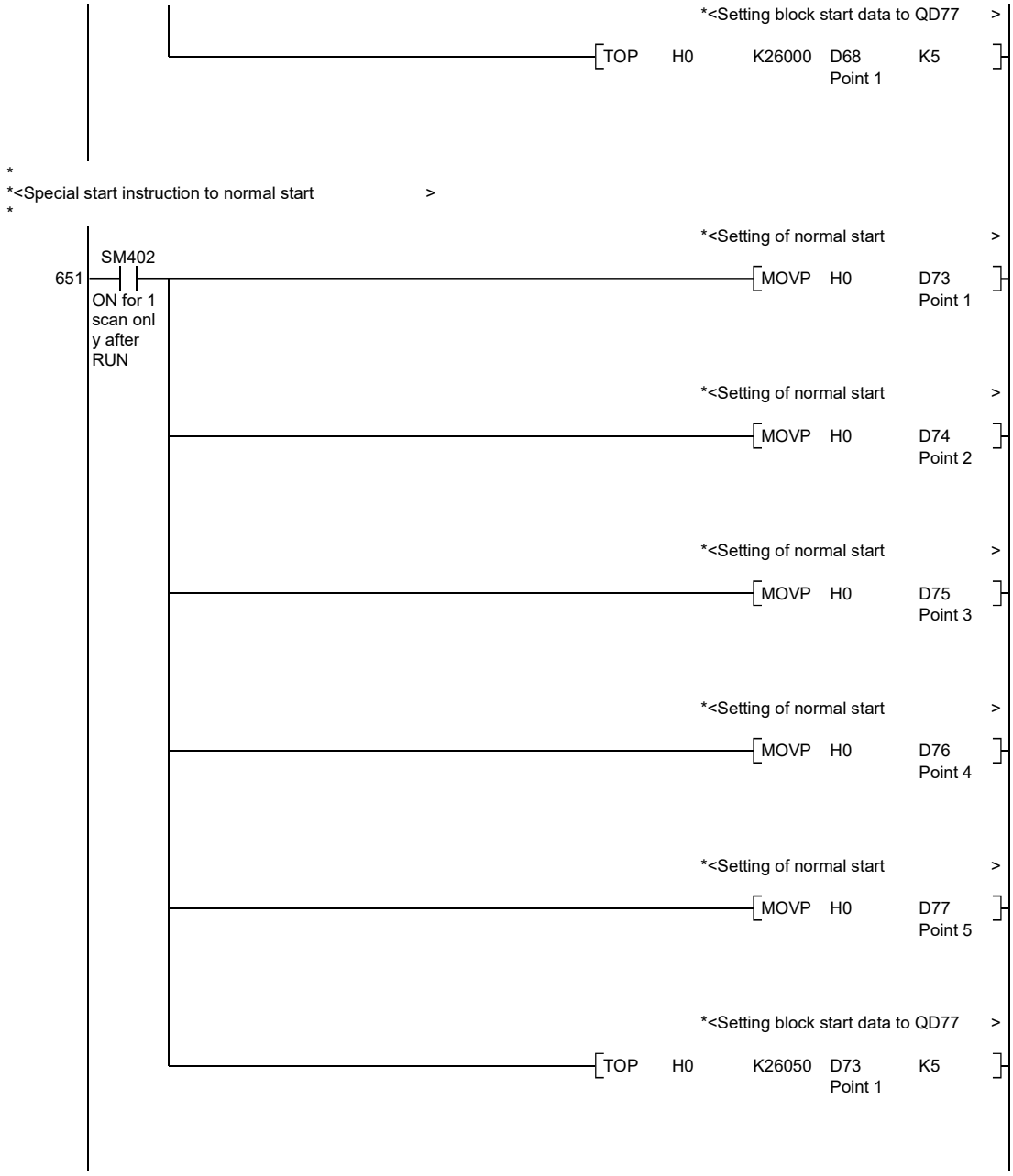
*<Setting block start data to QD77 >
TOP H0 K26000 D68 K5
Point 1
*
*<Special start instruction to normal start >
*
*<Setting of normal start >
651
SM402
ON for 1 scan onl y after RUN
MOVP H0 D73
Point 1
*<Setting of normal start >
MOVP H0 D74
Point 2
*<Setting of normal start >
MOVP H0 D75
Point 3
*<Setting of normal start >
MOVP H0 D76
Point 4
*<Setting of normal start >
MOVP H0 D77
Point 5
*<Setting block start data to QD77 >
TOP H0 K26050 D73 K5
Point 1

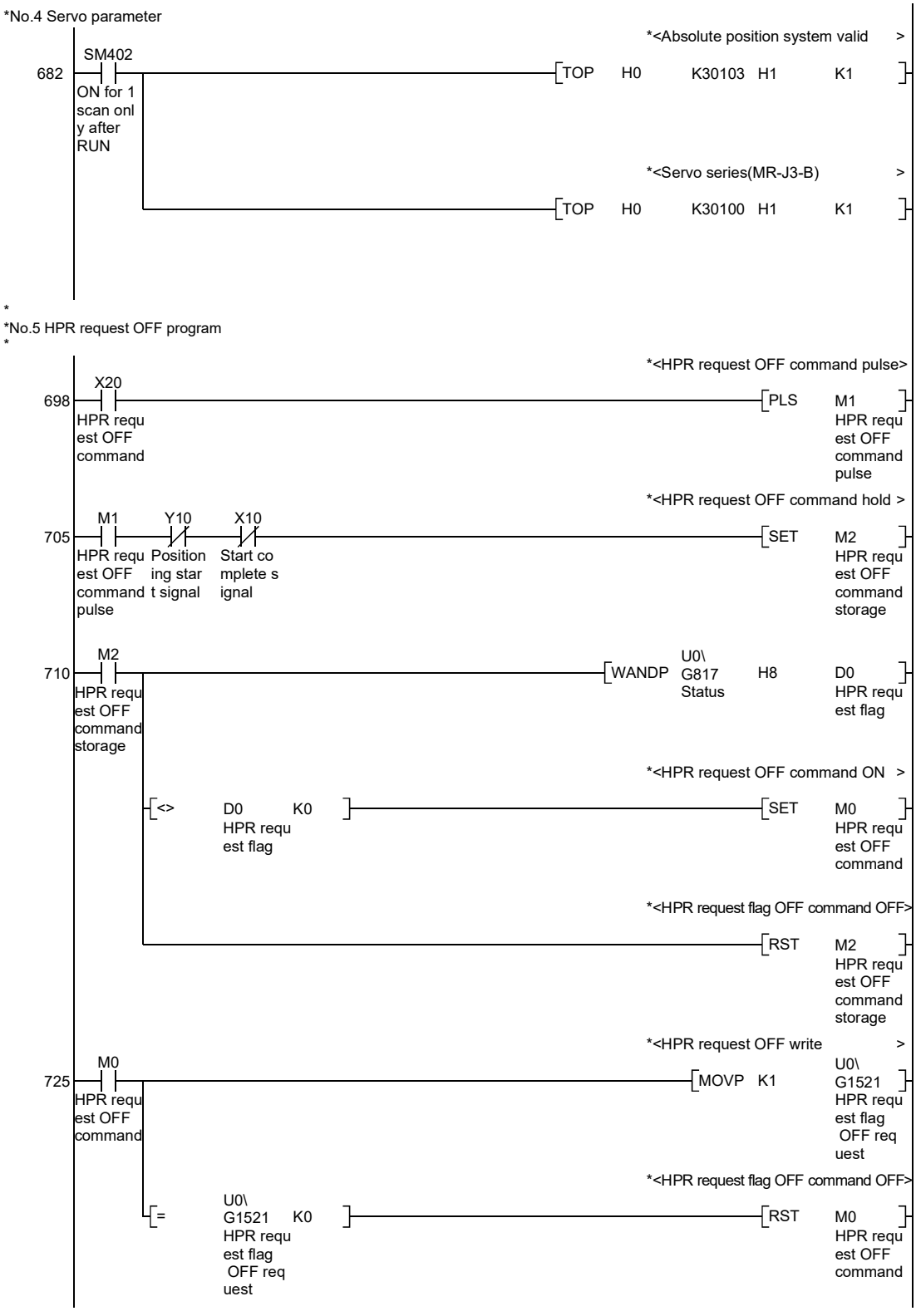
*No.4 Servo parameter
*<Absolute position system valid >
682
SM402
ON for 1 scan onl y after RUN
TOP H0 K30103 H1 K1
*<Servo series(MR-J3-B) >
TOP H0 K30100 H1 K1
*
*No.5 HPR request OFF program
*
*<HPR request OFF command pulse>
698
X20
HPR requ est OFF command
PLS M1
HPR requ est OFF command pulse
*<HPR request OFF command hold >
705
M1
HPR requ est OFF command pulse
Y10
Position ing star t signal
X10
Start co mplete s ignal
SET M2
HPR requ est OFF command storage
710
M2
HPR requ est OFF command storage
WANDP U0\ G817 Status H8 D0
HPR requ est flag
*<HPR request OFF command ON >
<> D0 K0
HPR requ est flag
SET M0
HPR requ est OFF command
*<HPR request flag OFF command OFF>
RST M2
HPR requ est OFF command storage
*<HPR request OFF write >
725
M0
HPR requ est OFF command
MOVP K1
U0\ G1521
HPR requ est flag OFF req uest
*<HPR request flag OFF command OFF>
= U0\ G1521 K0
HPR requ est flag OFF req uest
RST M0
HPR requ est OFF command

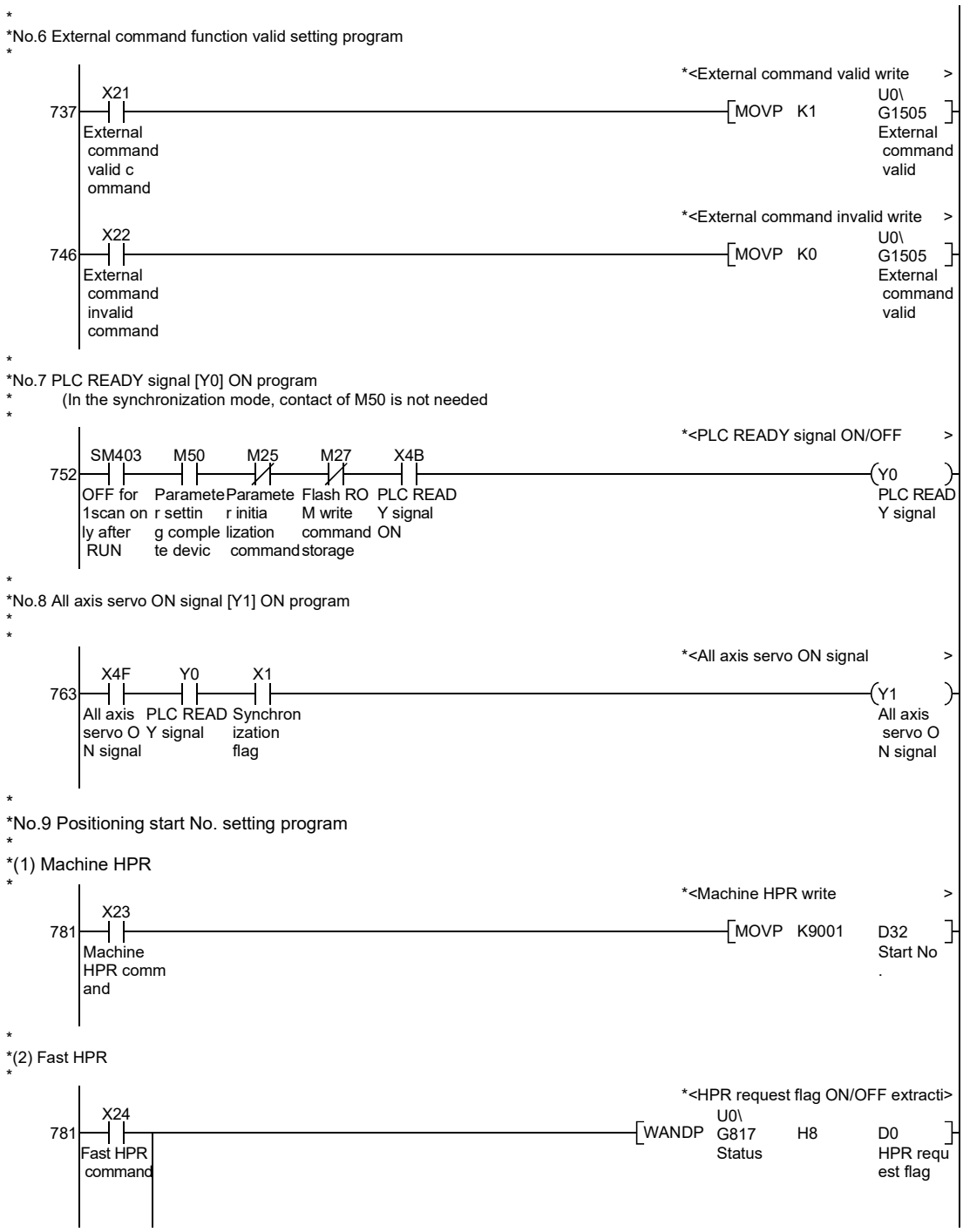
*
*No.6 External command function valid setting program
*
*<External command valid write >
737
X21
External command valid command
MOVP K1
U0\G1505
External command valid
*<External command invalid write >
746
X22
External command invalid command
MOVP K0
U0\G1505
External command valid
*
*No.7 PLC READY signal [Y0] ON program
* (In the synchronization mode, contact of M50 is not needed
*
*<PLC READY signal ON/OFF >
752
SM403
OFF for 1scan only after RUN
M50
Parameter setting complete device
M25
Parameter initialization command
M27
Flash ROM write command storage
X4B
PLC READY signal ON
Y0
PLC READY signal
*
*No.8 All axis servo ON signal [Y1] ON program
*
*
*<All axis servo ON signal >
763
X4F
All axis servo ON signal
Y0
PLC READY signal
X1
Synchronization flag
Y1
All axis servo ON signal
*
*No.9 Positioning start No. setting program
*
*(1) Machine HPR
*
*<Machine HPR write >
781
X23
Machine HPR command
MOVP K9001 D32
Start No.
*
*(2) Fast HPR
*
*<HPR request flag ON/OFF extracti>
781
X24
Fast HPR command
WANDP U0\G817 Status H8 D0
HPR request flag

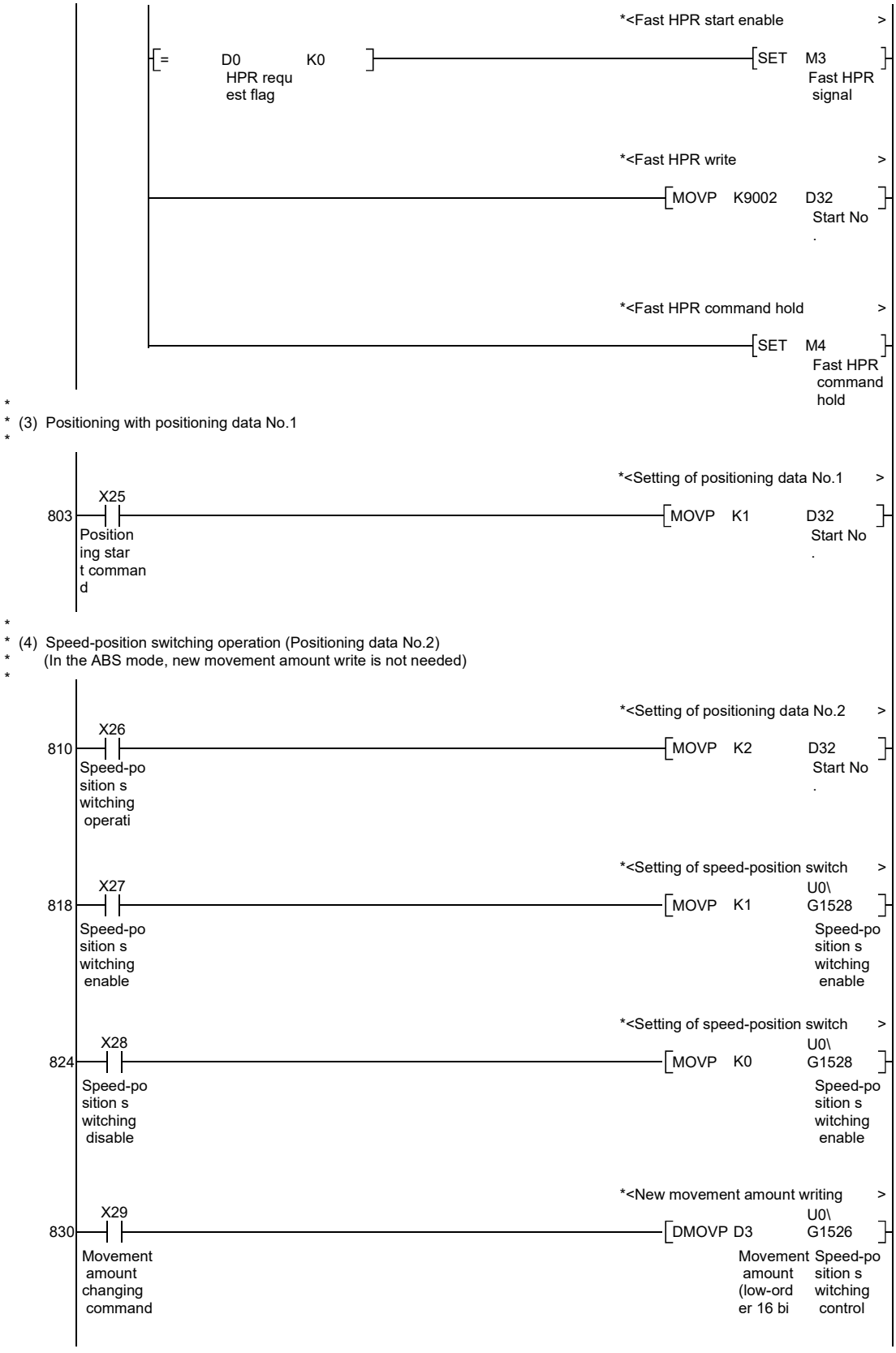
*<Fast HPR start enable >
= D0 K0
HPR requ
est flag
SET M3
Fast HPR
signal
*<Fast HPR write >
MOVP K9002 D32
Start No
.
*<Fast HPR command hold >
SET M4
Fast HPR
command
hold
* (3) Positioning with positioning data No.1
*<Setting of positioning data No.1 >
803
X25
Position
ing star
t comman
d
MOVP K1 D32
Start No
.
* (4) Speed-position switching operation (Positioning data No.2)
* (In the ABS mode, new movement amount write is not needed)
*<Setting of positioning data No.2 >
810
X26
Speed-po
sition s
witching
operati
MOVP K2 D32
Start No
.
*<Setting of speed-position switch >
818
X27
Speed-po
sition s
witching
enable
MOVP K1 U0\
G1528
Speed-po
sition s
witching
enable
*<Setting of speed-position switch >
824
X28
Speed-po
sition s
witching
disable
MOVP K0 U0\
G1528
Speed-po
sition s
witching
enable
*<New movement amount writing >
830
X29
Movement
amount
changing
command
DMOVP D3 U0\
G1526
Movement
amount
(low-ord
er 16 bi
Speed-po
sition s
witching
control

*
* (5) Position-speed switching operation (Positioning data No.3)
*

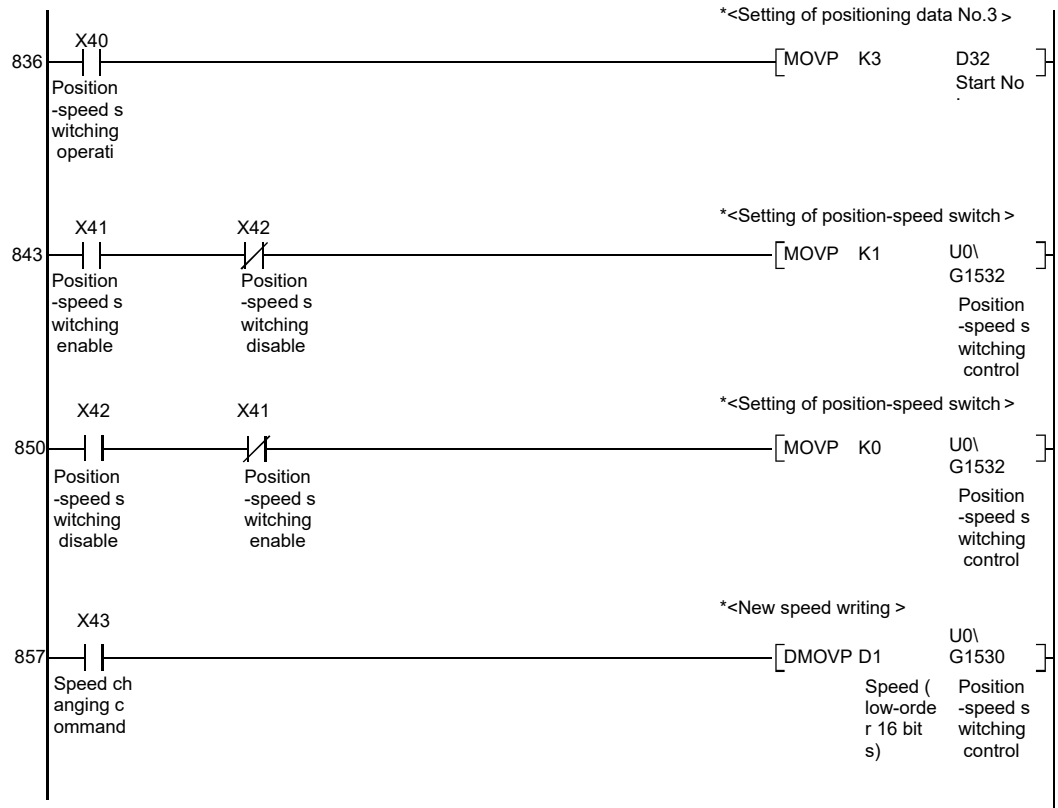

*
* (6) High-level positioning control
*

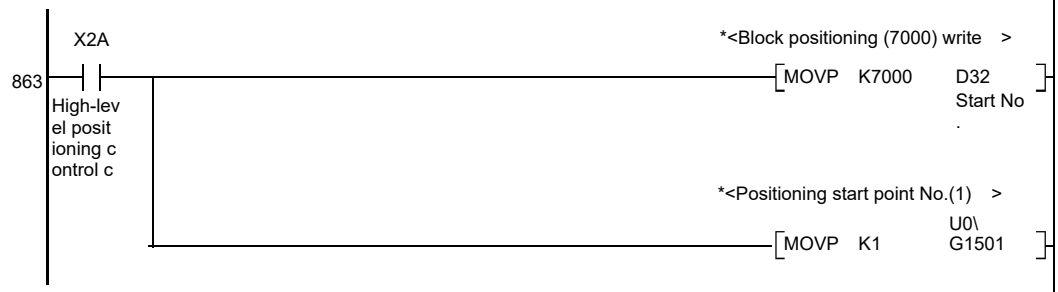

*
* (7) Fast HPR command and fast HPR command storage OFF
* (Not required when fast HPR is not used)
*

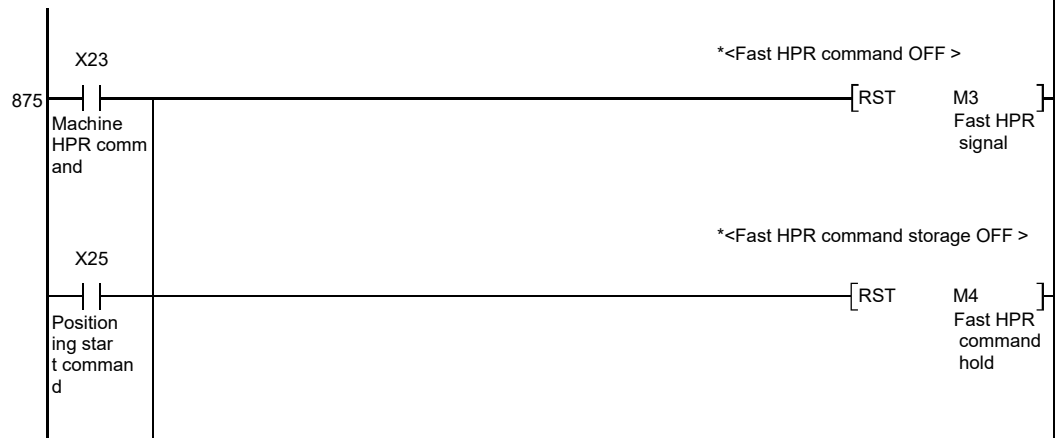

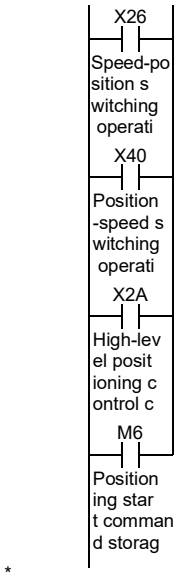


```
*
* No.10 Positioning start program
*
*  (1)  When dedicated instruction (ZP.PSTRT1) is used
*       (When fast HPR is not made, contacts of M3 and M4 are not
*        needed)
*       (When M code is not used, contact of X04 is not needed)
*       (When JOG operation/inching operation is not performed,
*        contact of M7 is not needed)
*       (When manual pulse generator is not performed, contacts of
*        M9 is not needed)
*
```

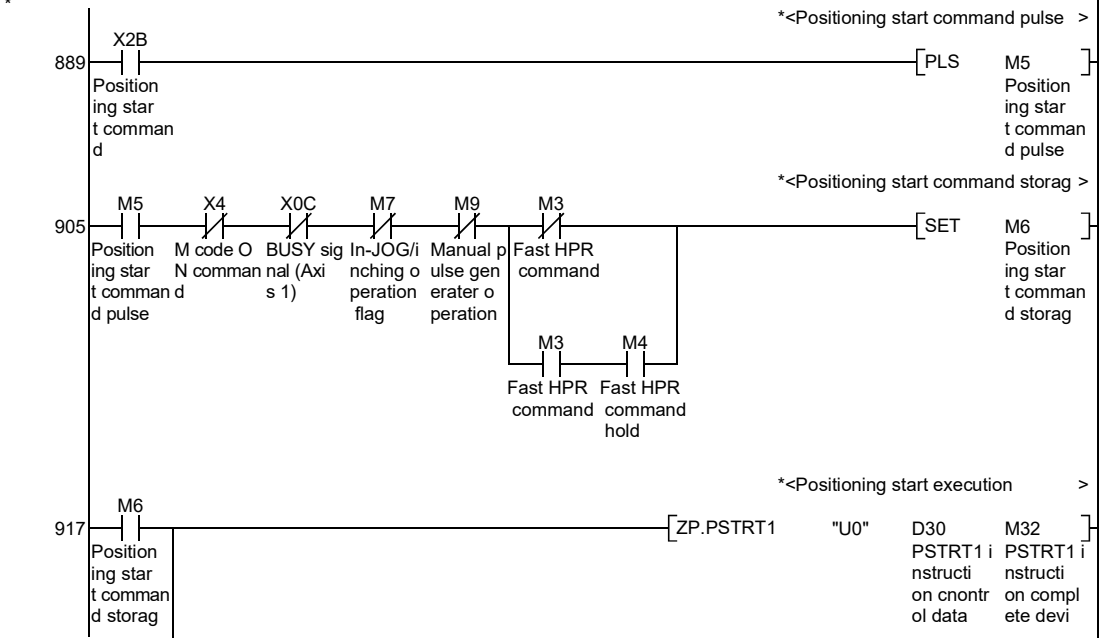

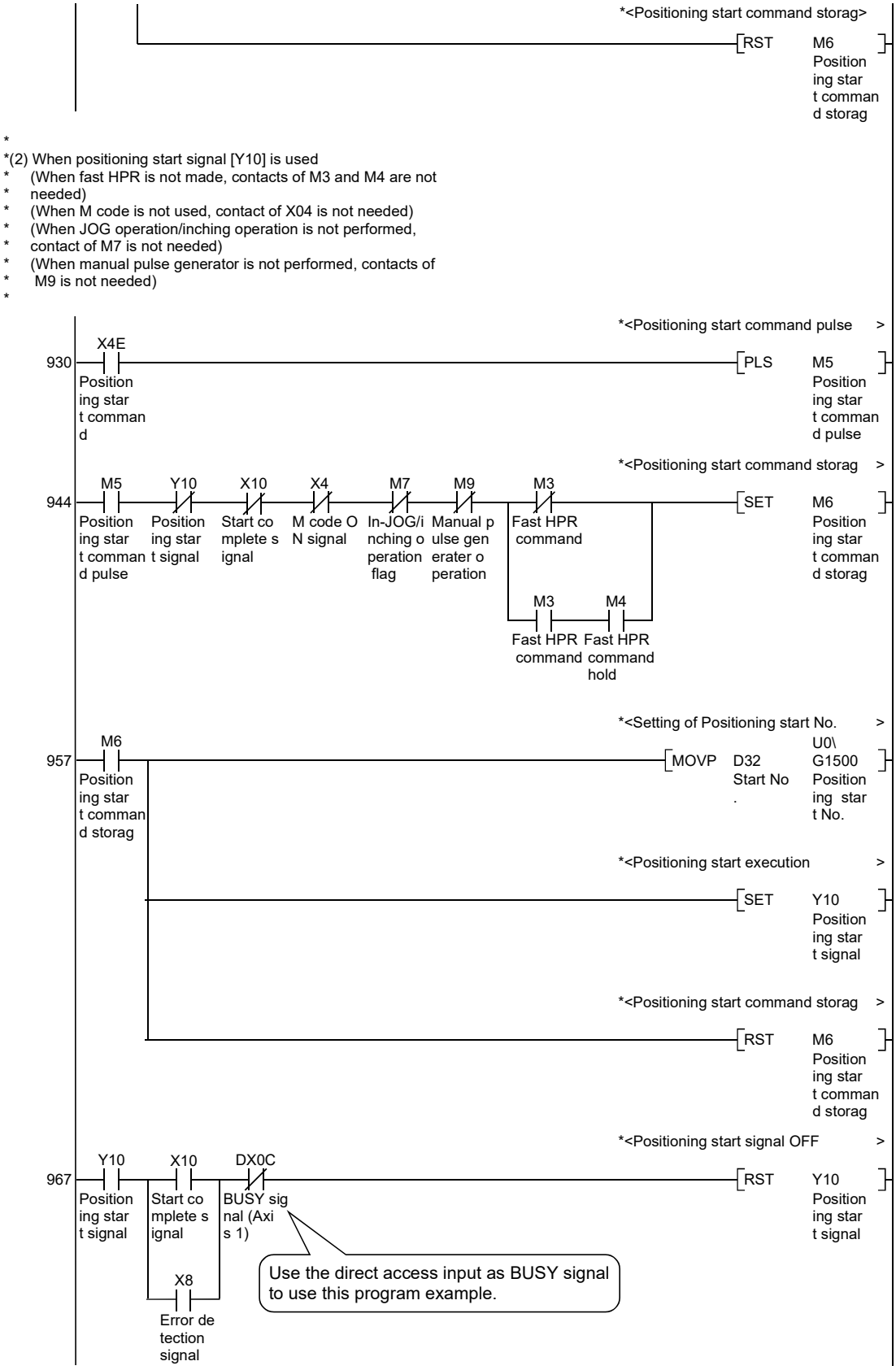
*<Positioning start command storag>
RST M6 Positioning start command storag
*
*(2) When positioning start signal [Y10] is used
* (When fast HPR is not made, contacts of M3 and M4 are not
* needed)
* (When M code is not used, contact of X04 is not needed)
* (When JOG operation/inching operation is not performed,
* contact of M7 is not needed)
* (When manual pulse generator is not performed, contacts of
* M9 is not needed)
*
*<Positioning start command pulse >
930 X4E Positioning start command
PLS M5 Positioning start command pulse
*<Positioning start command storag >
944 M5 Positioning start command pulse
Y10 Positioning start signal
X10 Start complete signal
X4 M code ON signal
M7 In-JOG/inching operation flag
M9 Manual pulse generater operation
M3 Fast HPR command
SET M6 Positioning start command storag
M3 Fast HPR command
M4 Fast HPR command hold
*<Setting of Positioning start No. >
957 M6 Positioning start command storag
MOVP D32 Start No. U0\G1500 Positioning start No.
*<Positioning start execution >
SET Y10 Positioning start signal
*<Positioning start command storag >
RST M6 Positioning start command storag
*<Positioning start signal OFF >
967 Y10 Positioning start signal
X10 Start complete signal
DX0C BUSY signal (Axis 1)
X8 Error detection signal
RST Y10 Positioning start signal
Use the direct access input as BUSY signal to use this program example.

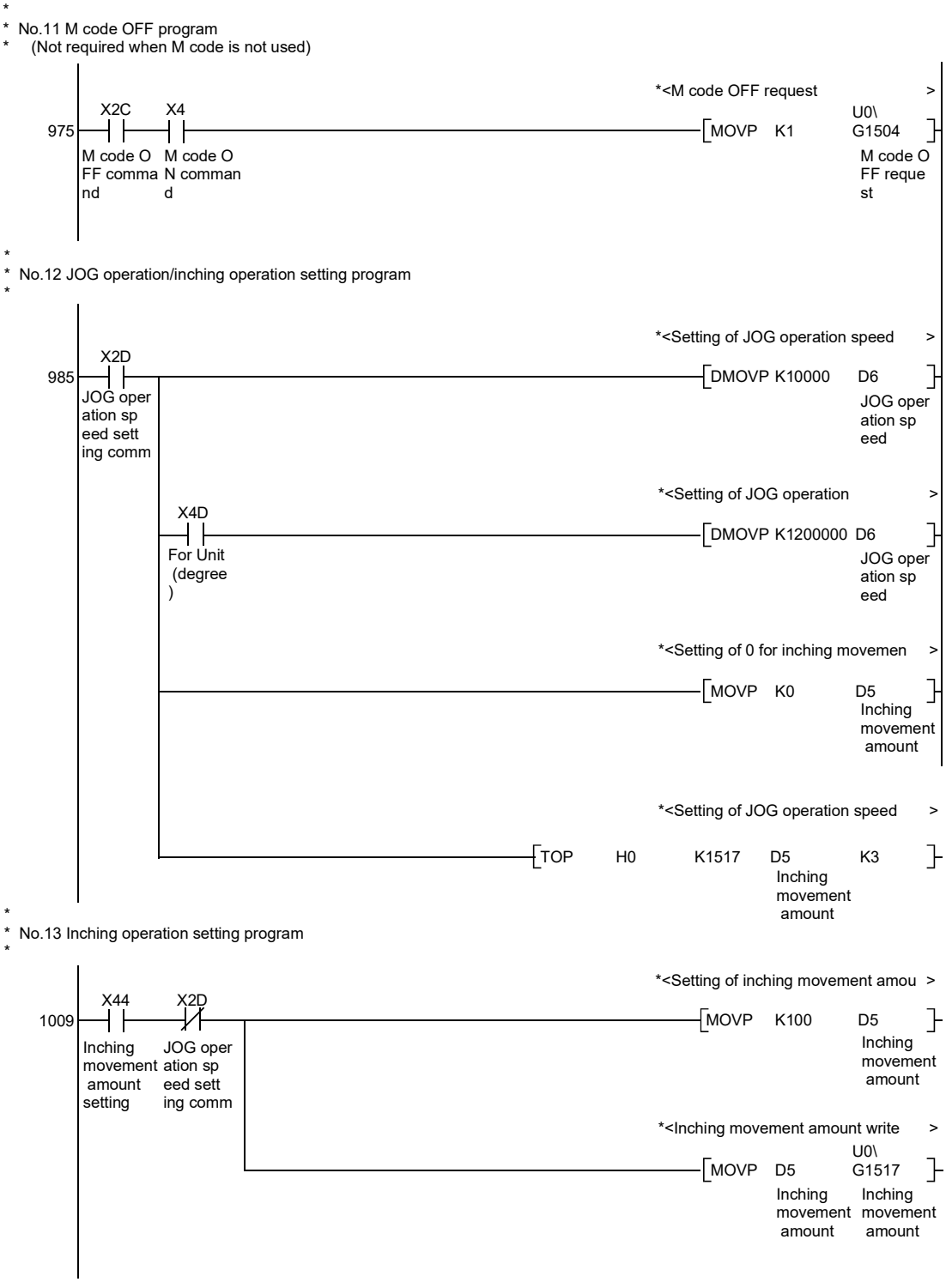
*
* No.11 M code OFF program
* (Not required when M code is not used)
*<M code OFF request >
X2C
X4
975
MOVP K1 U0\G1504
M code OFF command
M code ON command
M code OFF request
*
* No.12 JOG operation/inching operation setting program
*
*<Setting of JOG operation speed >
X2D
985
DMOVP K10000 D6
JOG operation speed setting comm
JOG operation speed
*<Setting of JOG operation >
X4D
DMOVP K1200000 D6
For Unit (degree)
JOG operation speed
*<Setting of 0 for inching movemen >
MOVP K0 D5
Inching movement amount
*<Setting of JOG operation speed >
TOP H0 K1517 D5 K3
Inching movement amount
*
* No.13 Inching operation setting program
*
*<Setting of inching movement amou >
X44
X2D
1009
MOVP K100 D5
Inching movement amount setting
JOG operation speed setting comm
Inching movement amount
*<Inching movement amount write >
MOVP D5 U0\G1517
Inching movement amount
Inching movement amount

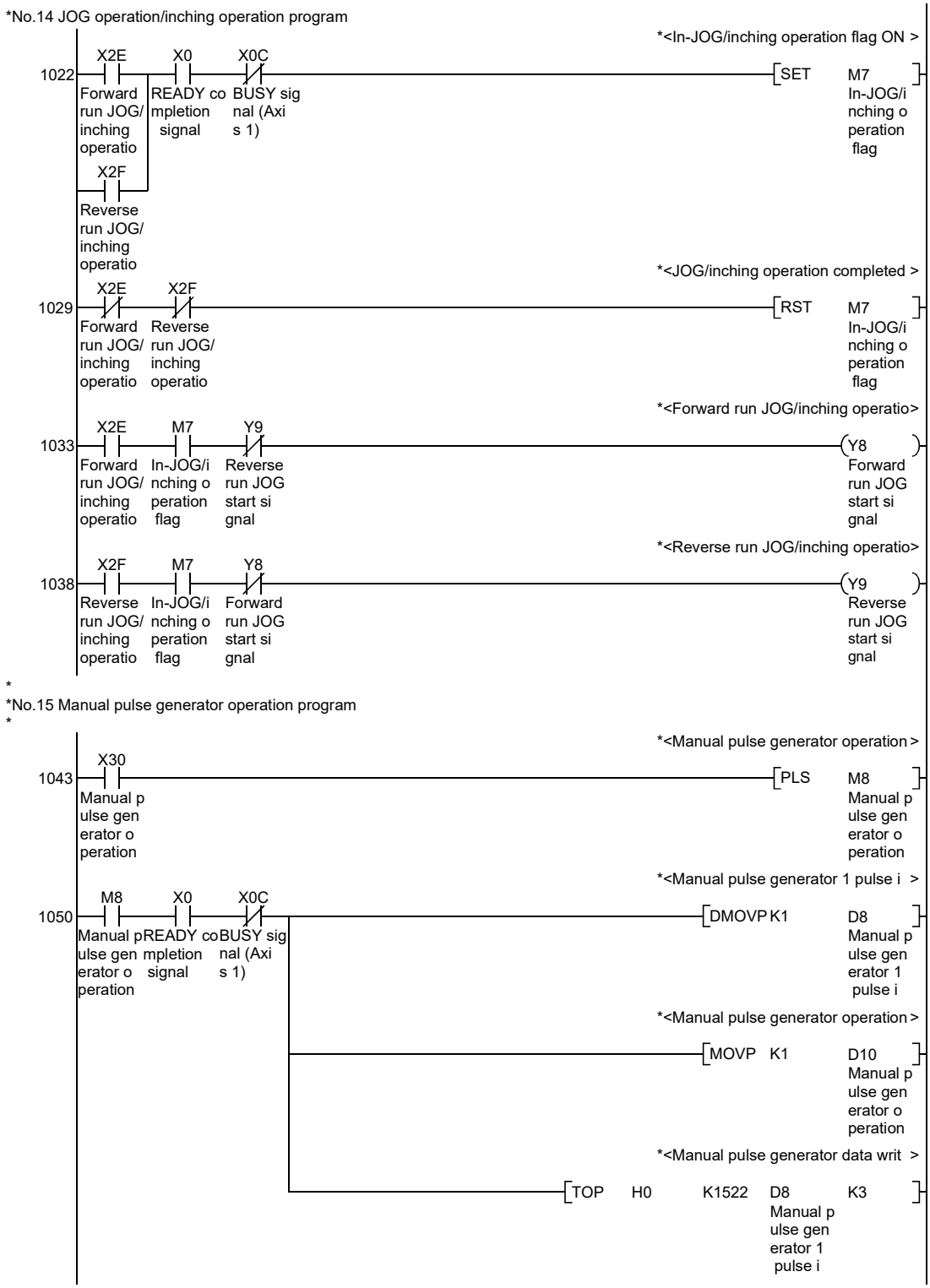
*No.14 JOG operation/inching operation program
*<In-JOG/inching operation flag ON >
1022
X2E
Forward run JOG/ inching operatio
X0
READY co mpletion signal
X0C
BUSY sig nal (Axi s 1)
X2F
Reverse run JOG/ inching operatio
SET M7 In-JOG/i nching o peration flag
*<JOG/inching operation completed >
1029
X2E
Forward run JOG/ inching operatio
X2F
Reverse run JOG/ inching operatio
RST M7 In-JOG/i nching o peration flag
*<Forward run JOG/inching operatio>
1033
X2E
Forward run JOG/ inching operatio
M7
In-JOG/i nching o peration flag
Y9
Reverse run JOG start si gnal
Y8 Forward run JOG start si gnal
*<Reverse run JOG/inching operatio>
1038
X2F
Reverse run JOG/ inching operatio
M7
In-JOG/i nching o peration flag
Y8
Forward run JOG start si gnal
Y9 Reverse run JOG start si gnal
*
*No.15 Manual pulse generator operation program
*
*<Manual pulse generator operation >
1043
X30
Manual p ulse gen erator o peration
PLS M8 Manual p ulse gen erator o peration
*<Manual pulse generator 1 pulse i >
1050
M8
Manual p ulse gen erator o peration
X0
READY co mpletion signal
X0C
BUSY sig nal (Axi s 1)
DMOVP K1 D8 Manual p ulse gen erator 1 pulse i
*<Manual pulse generator operation >
MOVP K1 D10 Manual p ulse gen erator o peration
*<Manual pulse generator data writ >
TOP H0 K1522 D8 Manual p ulse gen erator 1 pulse i K3

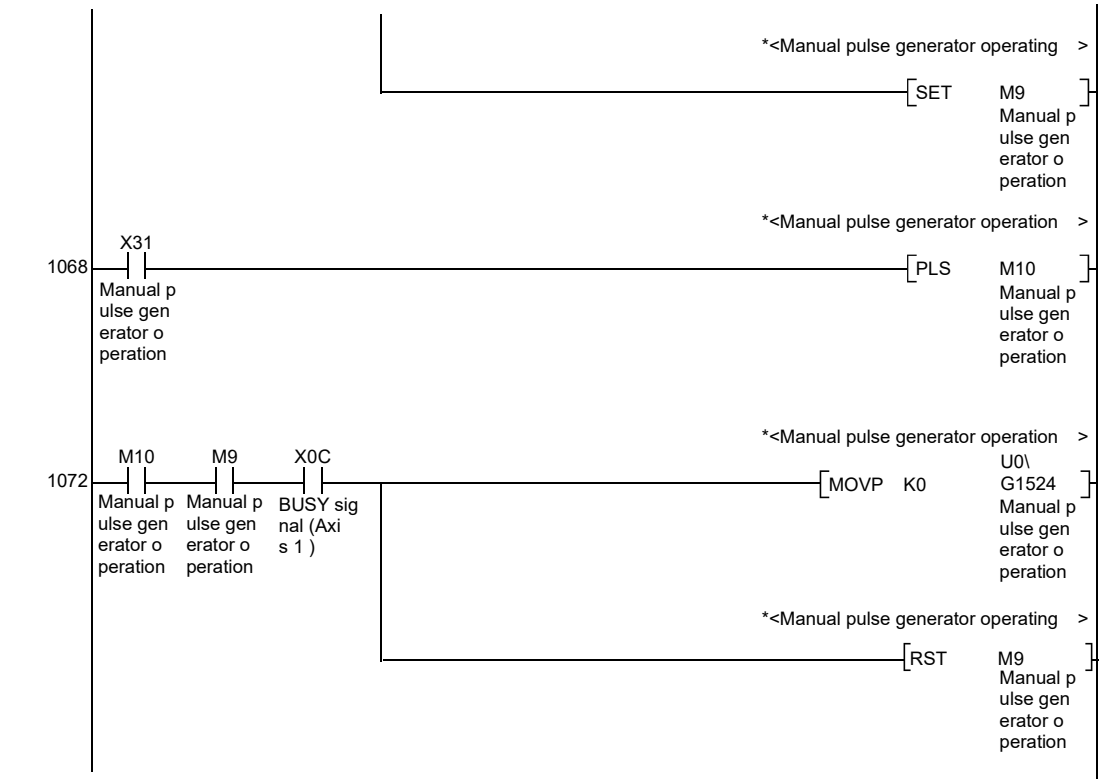

*
* No.16 Speed change program
*

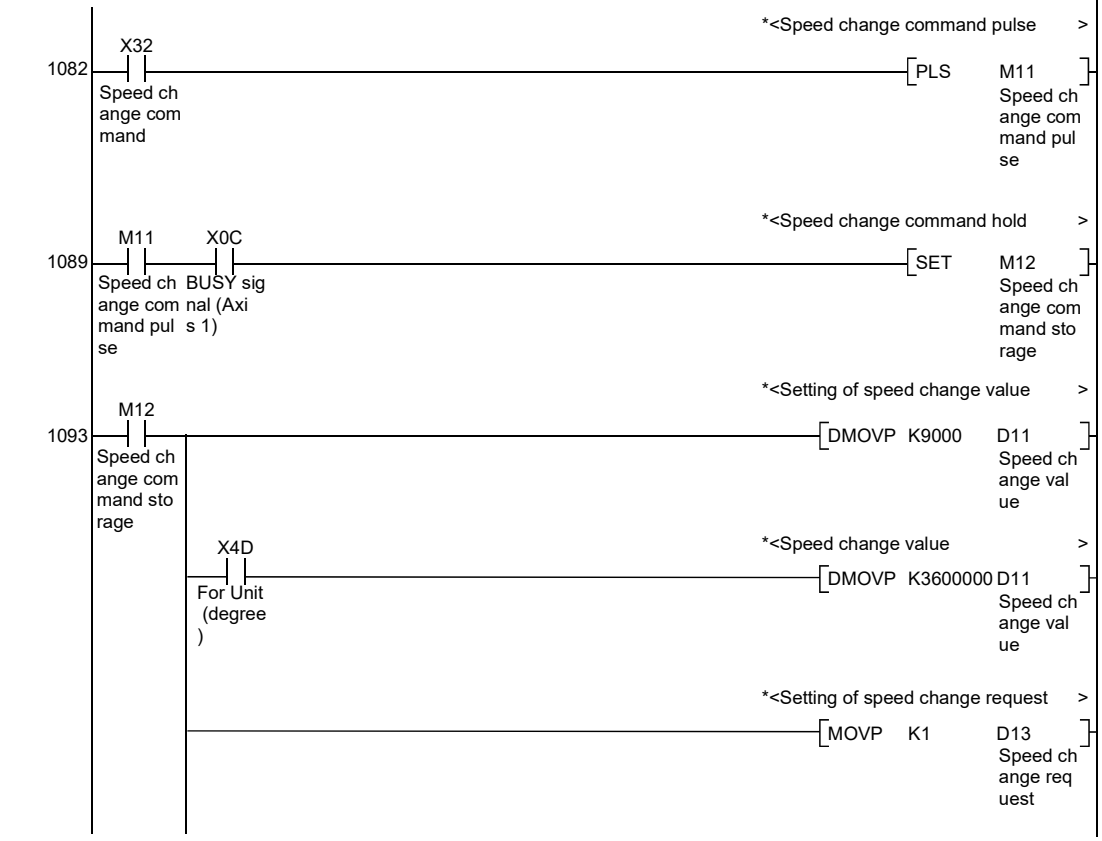

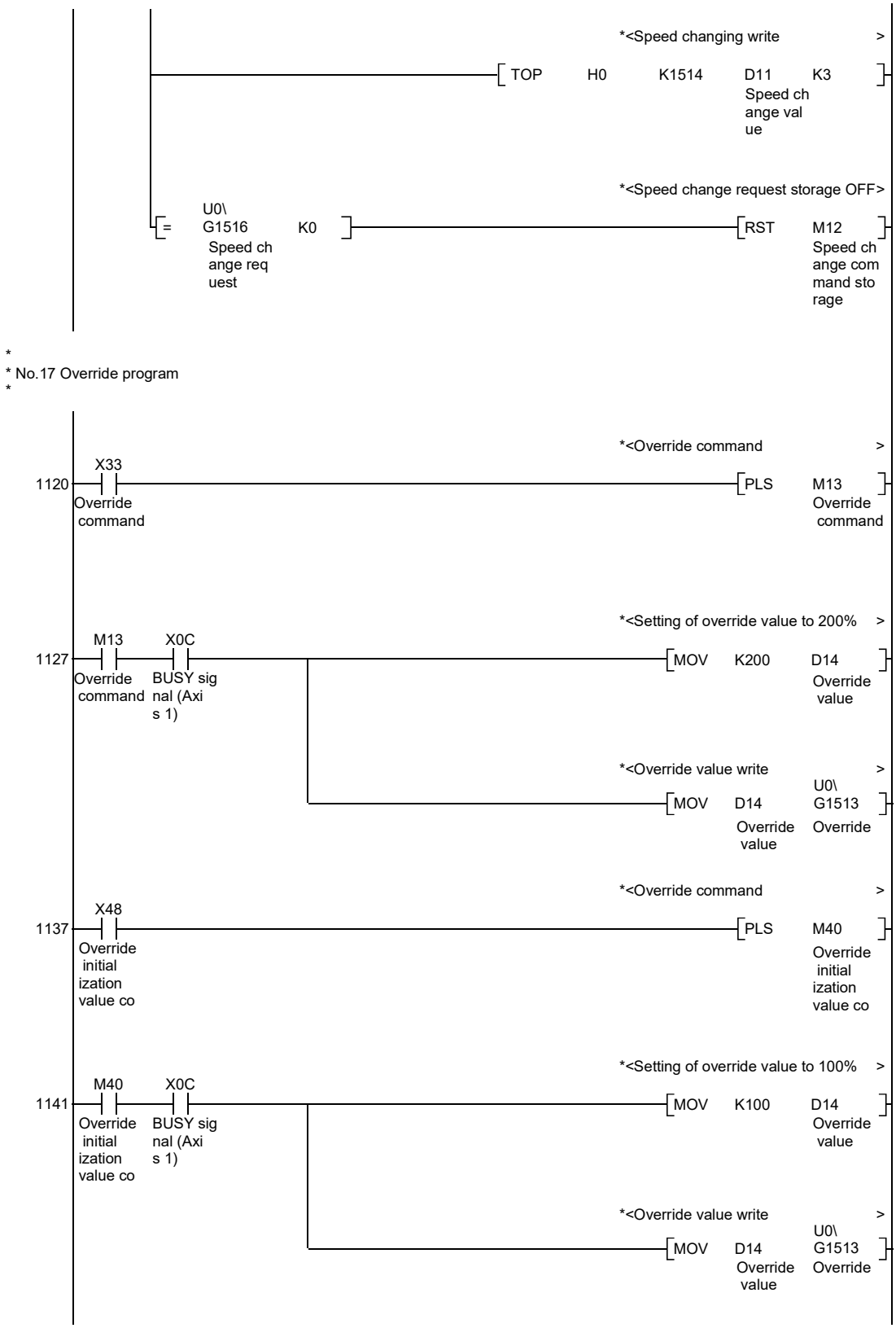
*<Speed changing write >
TOP H0 K1514 D11 K3
Speed change value
*<Speed change request storage OFF>
U0\G1516 = K0
Speed change request
RST M12
Speed change command storage
*
* No.17 Override program
*
*<Override command >
1120
X33
Override command
PLS M13
Override command
*<Setting of override value to 200% >
1127
M13
Override command
X0C
BUSY signal (Axis 1)
MOV K200 D14
Override value
*<Override value write >
MOV D14 U0\G1513
Override value
Override
*<Override command >
1137
X48
Override initialization value co
PLS M40
Override initialization value co
*<Setting of override value to 100% >
1141
M40
Override initialization value co
X0C
BUSY signal (Axis 1)
MOV K100 D14
Override value
*<Override value write >
MOV D14 U0\G1513
Override value
Override

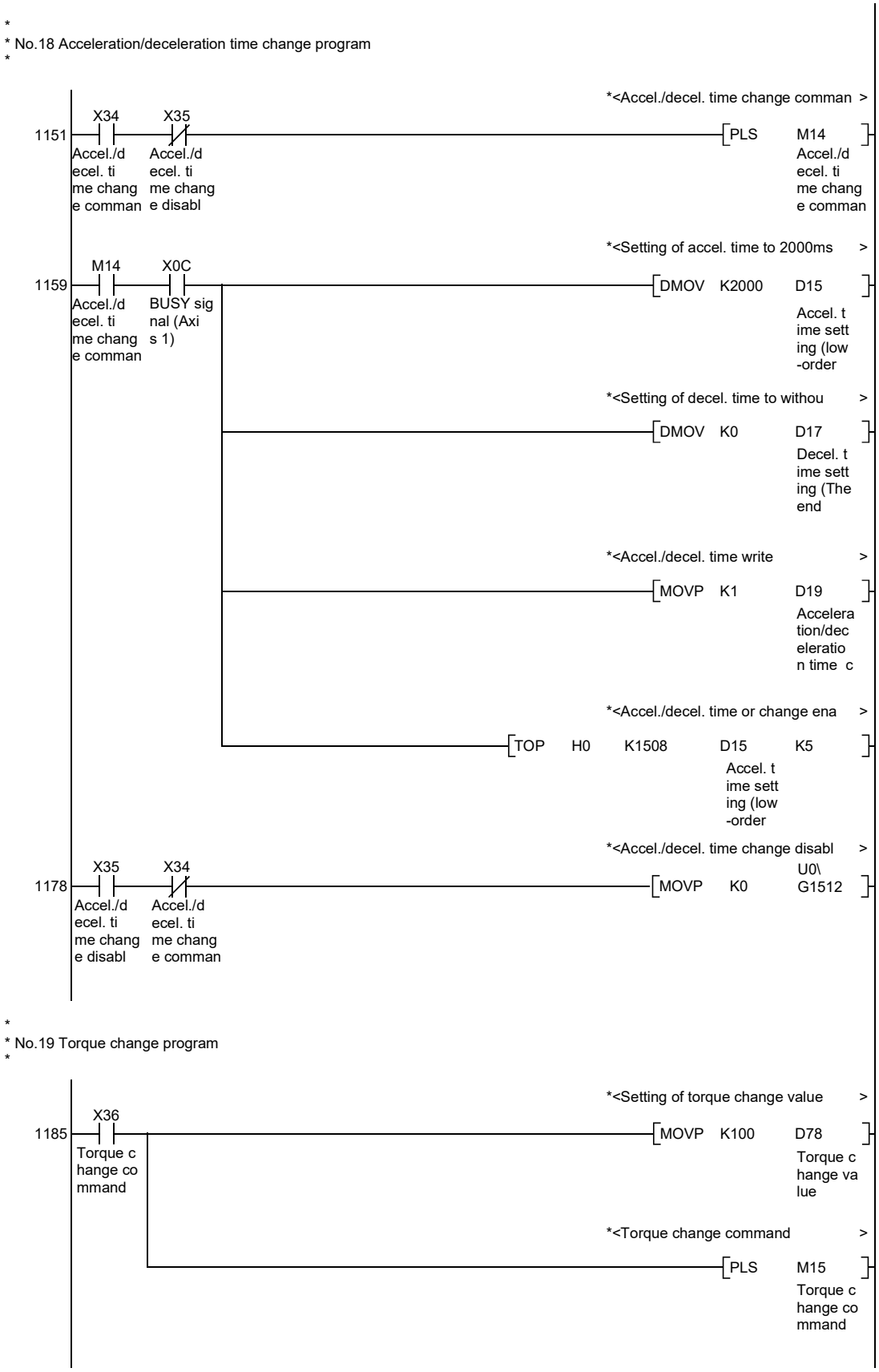
*
* No.18 Acceleration/deceleration time change program
*
*<Accel./decel. time change comman >
1151
X34
Accel./decel. time change command
X35
Accel./decel. time change disabl
PLS M14
Accel./decel. time change comman
*<Setting of accel. time to 2000ms >
1159
M14
Accel./decel. time change command
X0C
BUSY signal (Axis 1)
DMOV K2000 D15
Accel. time setting (low-order
*<Setting of decel. time to withou >
DMOV K0 D17
Decel. time setting (The end
*<Accel./decel. time write >
MOVP K1 D19
Acceleration/deceleration time c
*<Accel./decel. time or change ena >
TOP H0 K1508 D15 K5
Accel. time setting (low-order
*<Accel./decel. time change disabl >
1178
X35
Accel./decel. time change disable
X34
Accel./decel. time change command
MOVP K0 U0\G1512
*
* No.19 Torque change program
*
*<Setting of torque change value >
1185
X36
Torque change command
MOVP K100 D78
Torque change value
*<Torque change command >
PLS M15
Torque change command

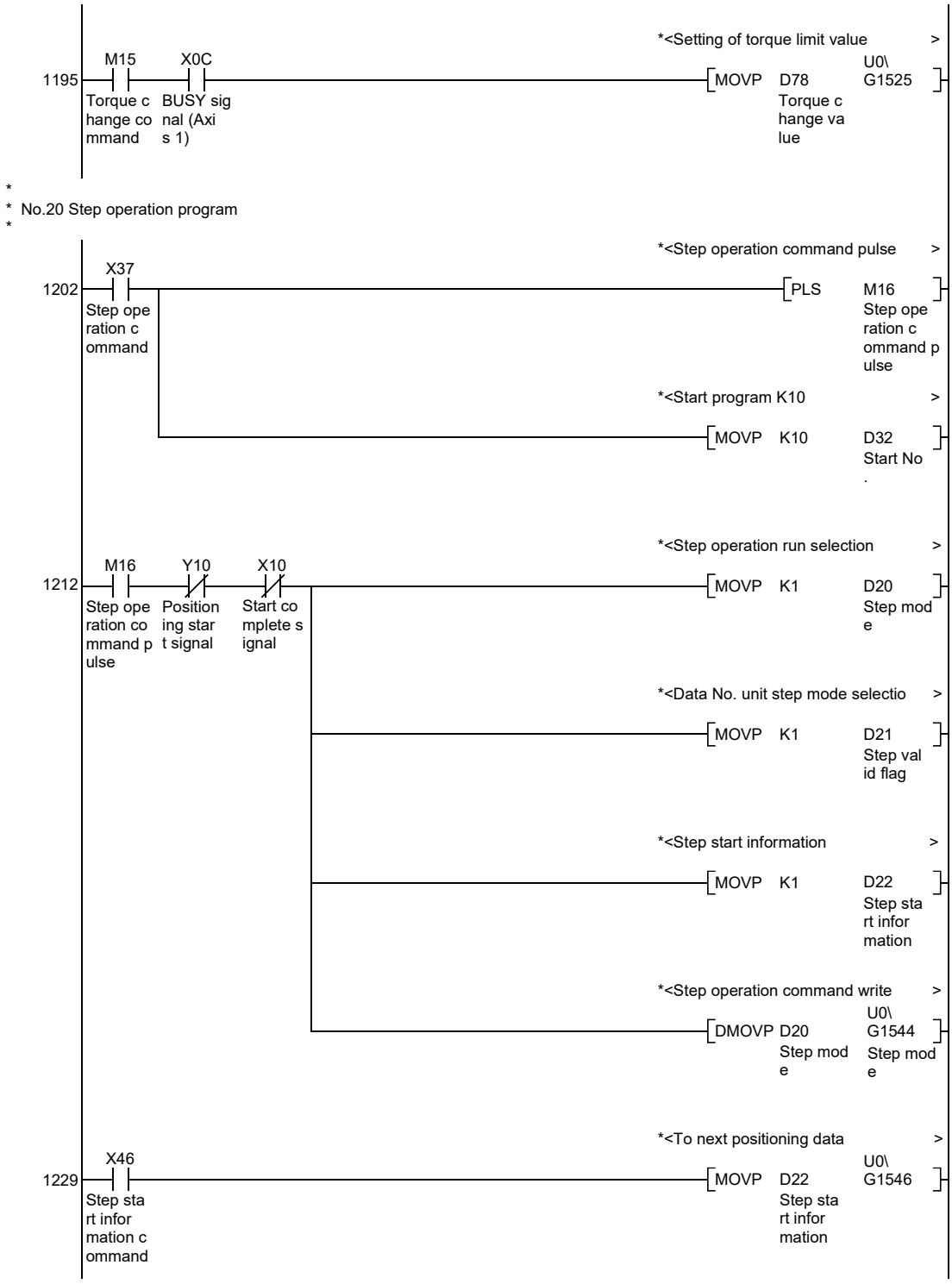
*<Setting of torque limit value >
1195
M15
Torque change command
X0C
BUSY signal (Axis 1)
MOVP D78 Torque change value U0\G1525
*
* No.20 Step operation program
*
*<Step operation command pulse >
1202
X37
Step operation command
PLS M16 Step operation command pulse
*<Start program K10 >
MOVP K10 D32 Start No.
*<Step operation run selection >
1212
M16
Step operation command pulse
Y10
Positioning start signal
X10
Start complete signal
MOVP K1 D20 Step mode
*<Data No. unit step mode selectio >
MOVP K1 D21 Step valid flag
*<Step start information >
MOVP K1 D22 Step start information
*<Step operation command write >
DMOVP D20 Step mode U0\G1544 Step mode
*<To next positioning data >
1229
X46
Step start information command
MOVP D22 Step start information U0\G1546

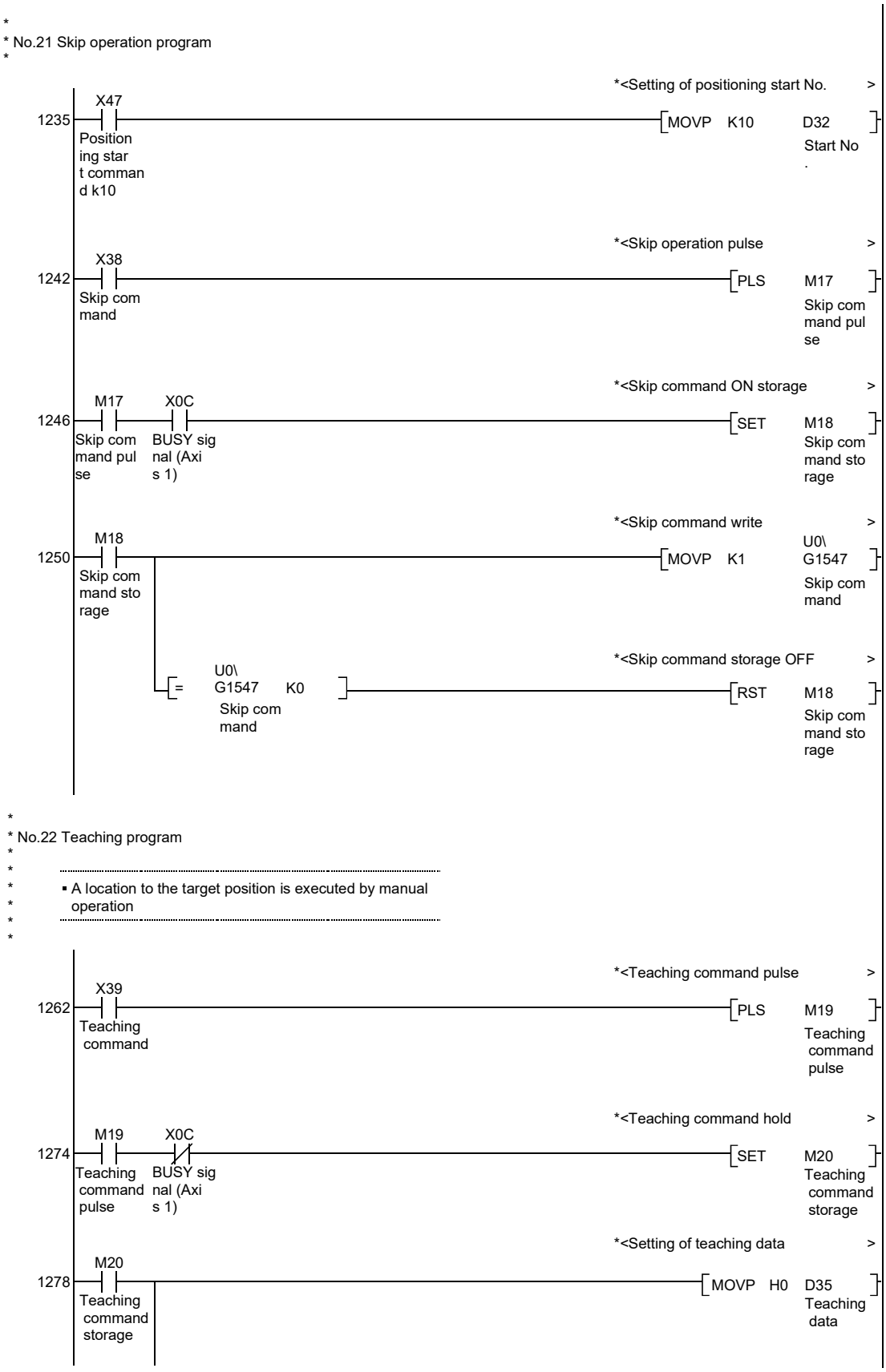
*
* No.21 Skip operation program
*
*<Setting of positioning start No. >
1235
X47
Positioning start command k10
MOVP K10 D32
Start No.
*<Skip operation pulse >
1242
X38
Skip command
PLS M17
Skip command pulse
*<Skip command ON storage >
1246
M17
Skip command pulse
X0C
BUSY signal (Axis 1)
SET M18
Skip command storage
*<Skip command write >
1250
M18
Skip command storage
MOVP K1 U0\G1547
Skip command
*<Skip command storage OFF >
U0\G1547 K0
Skip command
RST M18
Skip command storage
*
* No.22 Teaching program
*
* ▪ A location to the target position is executed by manual operation
*
*
*<Teaching command pulse >
1262
X39
Teaching command
PLS M19
Teaching command pulse
*<Teaching command hold >
1274
M19
Teaching command pulse
X0C
BUSY signal (Axis 1)
SET M20
Teaching command storage
*<Setting of teaching data >
1278
M20
Teaching command storage
MOVP H0 D35
Teaching data

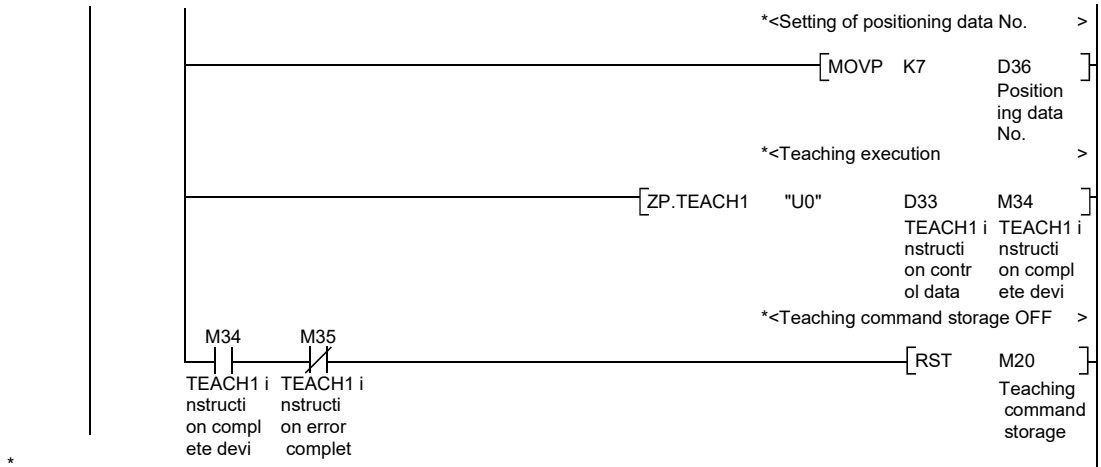


```
*
* No. 23 Continuous operation interrupt program
*
```

```
*
* No. 24 Target position change program
*
```

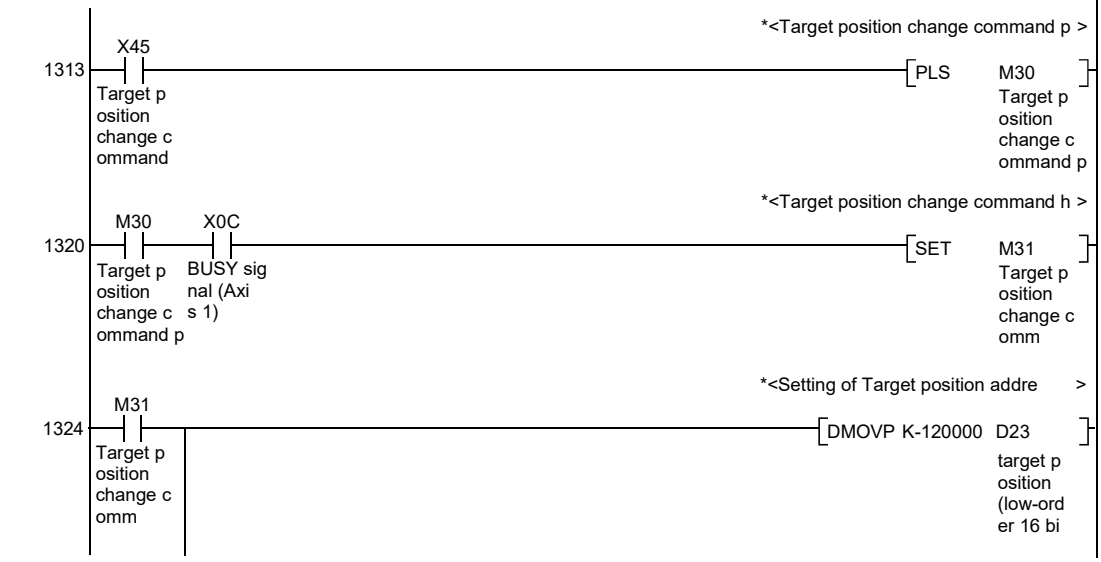

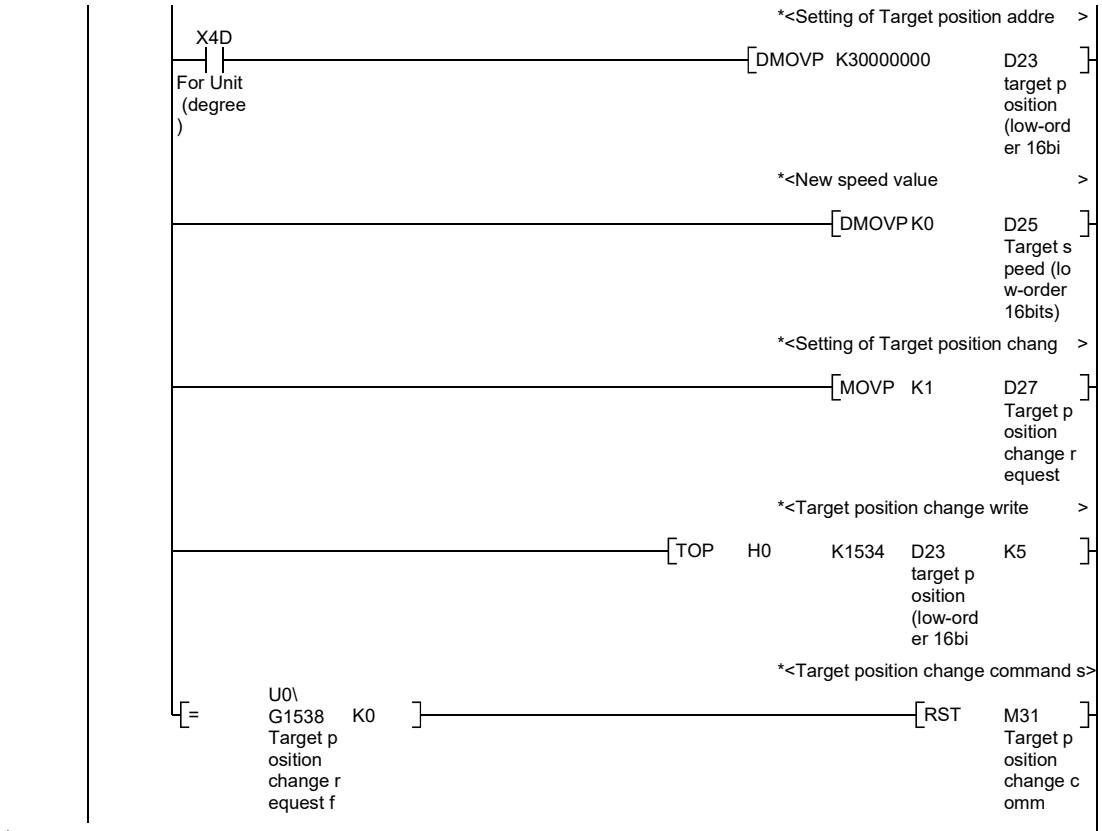

*
*No.25 Restart program
*

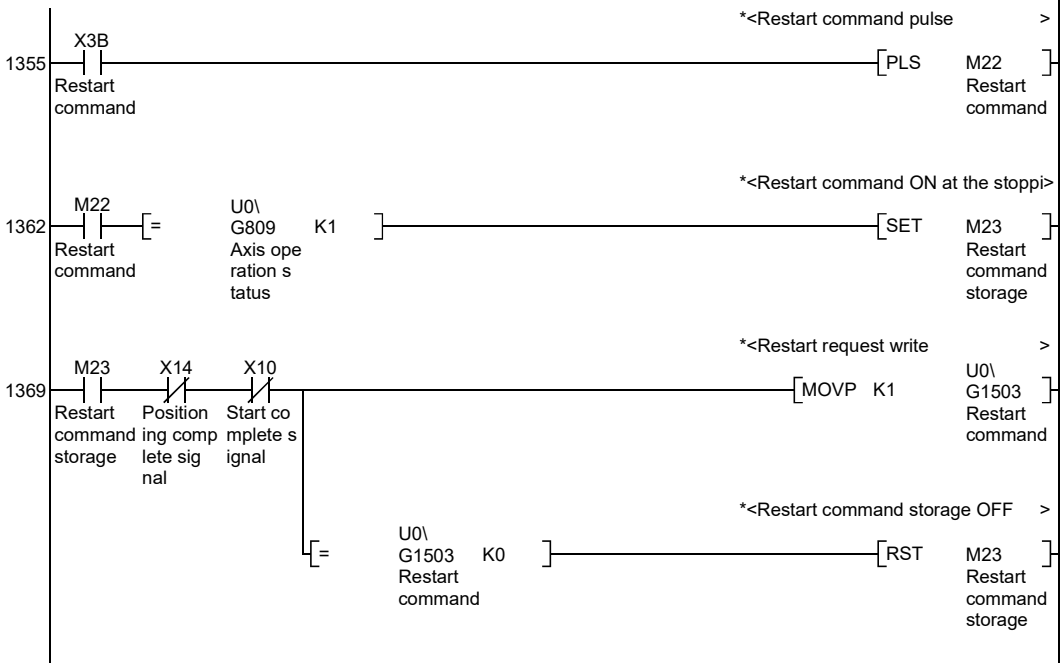

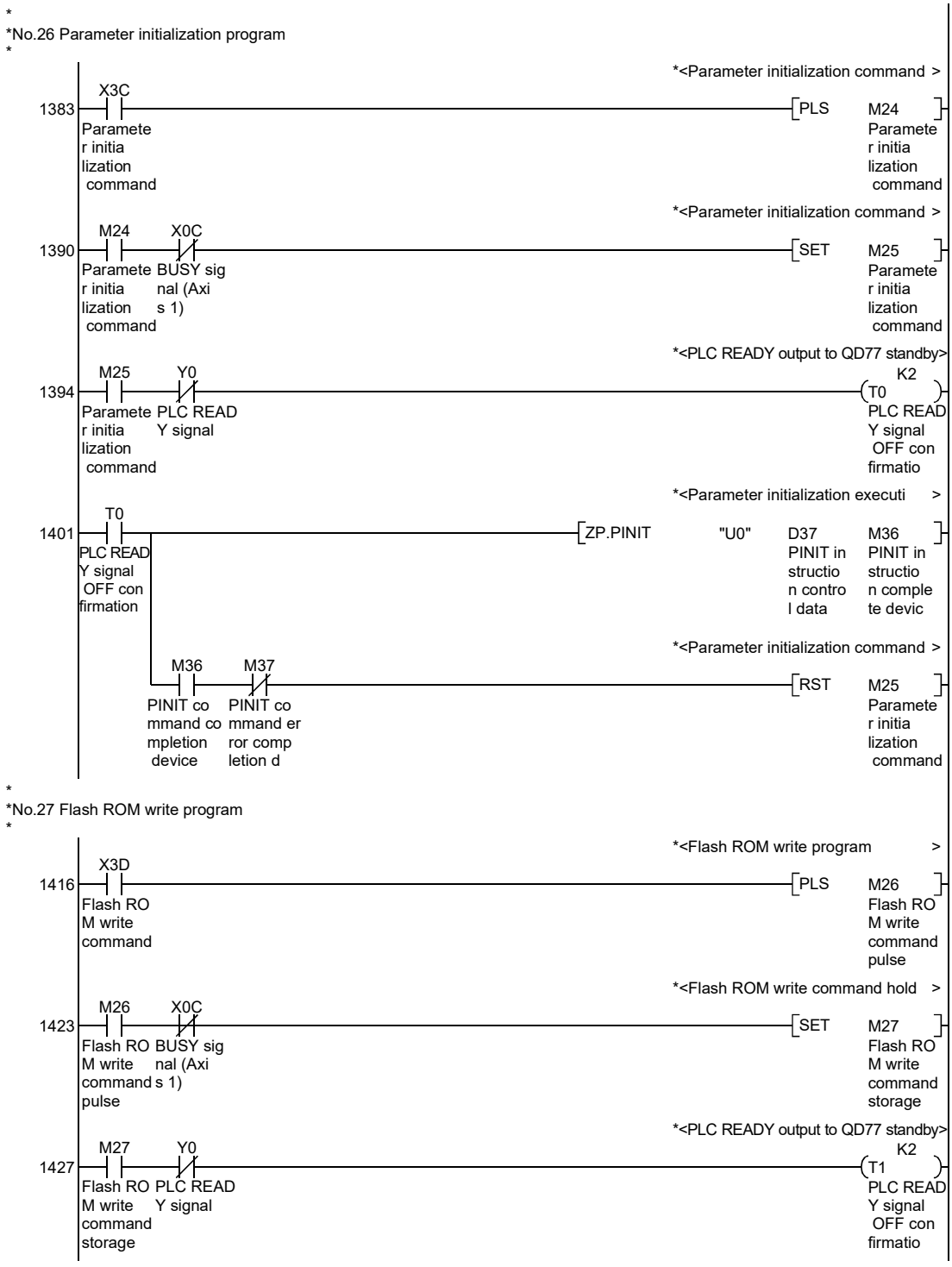
*
*No.26 Parameter initialization program
*
*<Parameter initialization command >
1383
X3C
Paramete r initia lization command
PLS M24
Paramete r initia lization command
*<Parameter initialization command >
1390
M24
Paramete r initia lization command
X0C
BUSY sig nal (Axi s 1)
SET M25
Paramete r initia lization command
*<PLC READY output to QD77 standby>
1394
M25
Paramete r initia lization command
Y0
PLC READ Y signal
K2 T0
PLC READ Y signal OFF con firmatio
*<Parameter initialization executi >
1401
T0
PLC READ Y signal OFF con firmation
ZP.PINIT "U0" D37 PINIT in structio n contro l data M36 PINIT in structio n comple te devic
*<Parameter initialization command >
M36
PINIT co mmand co mpletion device
M37
PINIT co mmand er ror comp letion d
RST M25
Paramete r initia lization command
*
*No.27 Flash ROM write program
*
*<Flash ROM write program >
1416
X3D
Flash RO M write command
PLS M26
Flash RO M write command pulse
*<Flash ROM write command hold >
1423
M26
Flash RO M write command pulse
X0C
BUSY sig nal (Axi s 1)
SET M27
Flash RO M write command storage
*<PLC READY output to QD77 standby>
1427
M27
Flash RO M write command storage
Y0
PLC READ Y signal
K2 T1
PLC READ Y signal OFF con firmatio

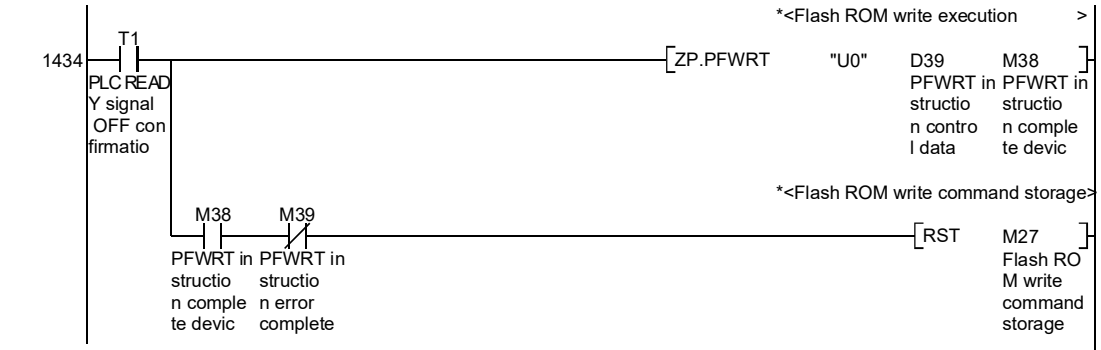

*

*No.28 Error reset program

*

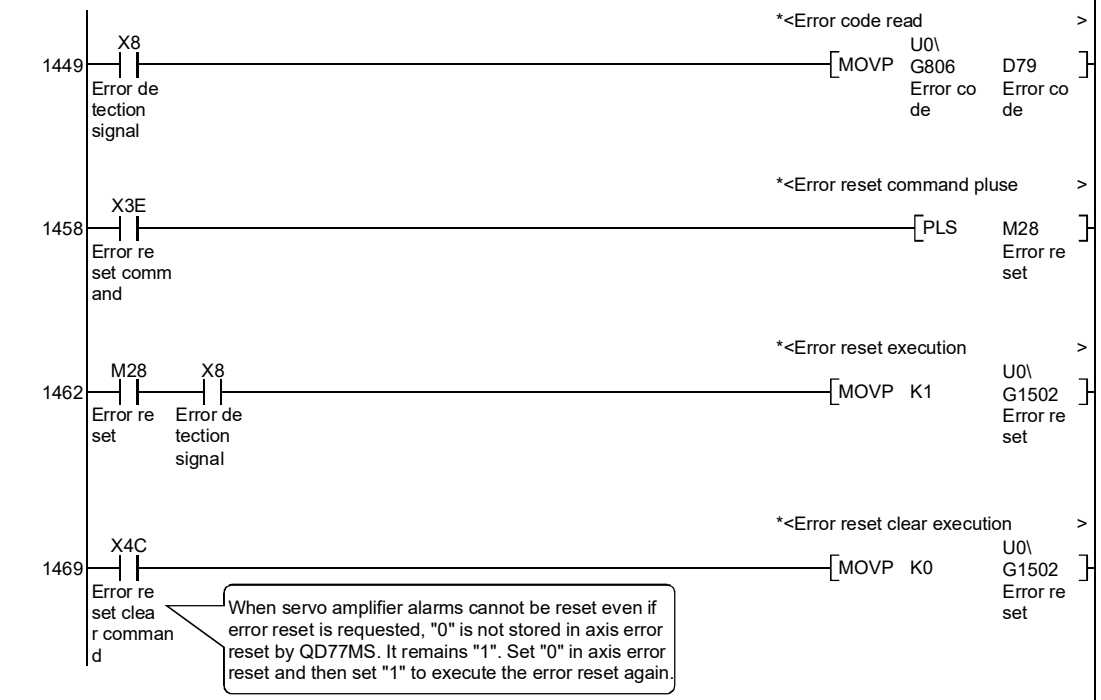

This program stores and resets only error codes.
To reset warnings, create OR circuits for the error detection signal (axis 1) X8 and warning detection signal (axis 1) G817.9 with step 1462.
In addition, create a program to store the warning codes by referring to step 1449.

*

*No.29 Stop program

*

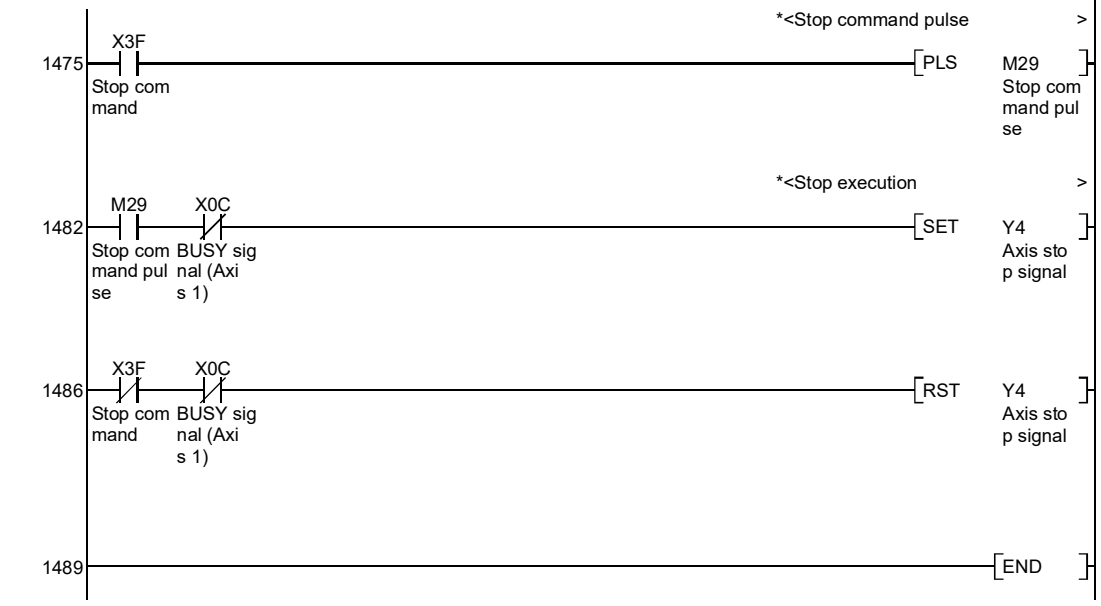

6.5 Program details

6.5.1 Initialization program

[1] HPR request OFF program

This program forcibly turns OFF the "HPR request flag" ([Md.31] Status: b3) which is ON.
When using a system that does not require HPR, assemble the program to cancel the "HPR request" made by the Simple Motion module when the power is turned ON, etc.

■ Data requiring setting

Set the following data to use the HPR request flag OFF request.

Setting item		Setting value	Setting details	Buffer memory address	
				QD77MS2 QD77MS4	QD77MS16
[Cd.19]	HPR request flag OFF request	1	Set to "1: Turn HPR request flag OFF".	1521+100n	4321+100n

n: Axis No.-1

∗: Refer to Section 5.7 "List of control data" for details on the setting details.

■ Time chart for HPR OFF request

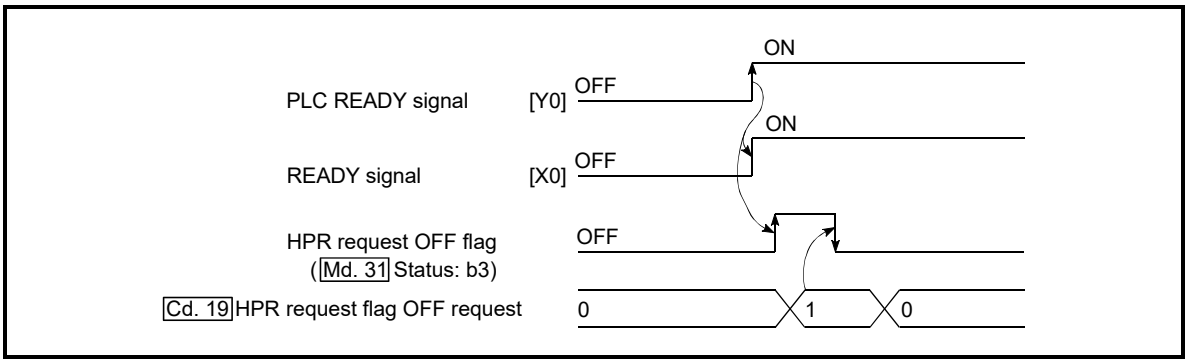

Fig. 6.1 Time chart for HPR OFF request

[2] External command function valid setting program

This program is used to validate the "external command signal" beforehand when using the external command functions (external start, speed change, speed-position switching, position-speed switching, skip). Set which function to use beforehand in "[Pr.42] External command function selection".
(Set the external command signal (DI) in "[Pr.95] External command signal selection" at QD77MS16 use.)
Set the following data to validate the "external command signal".

Setting item		Setting value	Setting details	Buffer memory address	
				QD77MS2 QD77MS4	QD77MS16
[Cd.8]	External command valid	1	Set to "1: Validate external command".	1505+100n	4305+100n

n: Axis No.-1

∗: Refer to Section 5.7 "List of control data" for details on the setting details.

6.5.2 Start details setting program

This program sets which control, out of "HPR", "major positioning control", "high-level positioning control" or "expansion control" to execute. For "high-level positioning control", "fast HPR", "speed-position switching control" and "position-speed switching control", add the respectively required sequence program.
(Refer to "Chapter 10" for details of "high-level positioning control" and "Chapter 12" for details on the "expansion control".)

■ Procedures for setting the starting details

(1) Set the "positioning start No." corresponding to the control to be started in "[Cd.3] Positioning start No.".

Setting item		Setting value	Setting details	Buffer memory address	
				QD77MS2 QD77MS4	QD77MS16
[Cd.3]	Positioning start No.	→	1 to 600 : Positioning data No. 9001 : Machine HPR 9002 : Fast HPR 9003 : Current value changing 9004 : Simultaneous start 7000 to 7004 : Block No. (For "high-level positioning control")	1500+100n	4300+100n

n: Axis No.-1

∗: Refer to Section 5.7 "List of control data" for details on the setting details.

(2) For "high-level positioning control", set the "positioning start point No." of the block to be started in "[Cd.4] Positioning starting point No.".

Setting item		Setting value	Setting details	Buffer memory address	
				QD77MS2 QD77MS4	QD77MS16
[Cd.4]	Positioning starting point No.	→	1 to 50 : Point No. of block start data	1501+100n	4301+100n

n: Axis No.-1

∗: Refer to Section 5.7 "List of control data" for details on the setting details.

(3) Set the following control data for "speed-position switching control (INC mode)".
(Set "[Cd.23] Speed-position switching control movement amount change register" as required. Setting is not required in the ABS mode.)

Setting item		Setting value	Setting details	Buffer memory address	
				QD77MS2 QD77MS4	QD77MS16
[Cd.23]	Speed-position switching control movement amount change register	→	Set the new value when the position control's movement amount is to be changed during speed control.	1526+100n 1527+100n	4326+100n 4327+100n
[Cd.24]	Speed-position switching enable flag	1	When "1" is set, the speed-position switching signal will be validated.	1528+100n	4328+100n

n: Axis No.-1

∗: Refer to Section 5.7 "List of control data" for details on the setting details.

(4) For "position-speed switching control", set the control data shown below. (As required, set the "[Cd.25] Position-speed switching control speed change register".)

Setting item		Setting value	Setting details	Buffer memory address	
				QD77MS2 QD77MS4	QD77MS16
[Cd.25]	Position-speed switching control speed change register	→	Used to set a new value when speed is changed during positioning control.	1530+100n 1531+100n	4330+100n 4331+100n
[Cd.26]	Position-speed switching enable flag	1	To validate position-speed switching signal, this is set to 1.	1532+100n	4332+100n

n: Axis No.-1

∗: Refer to Section 5.7 "List of control data" for details on the setting details.

6.5.3 Start program

This program is used to start the control with start commands.
The control can be started with the following two methods.

[1] Starting by inputting positioning start signal
[2] Starting by inputting external command signal

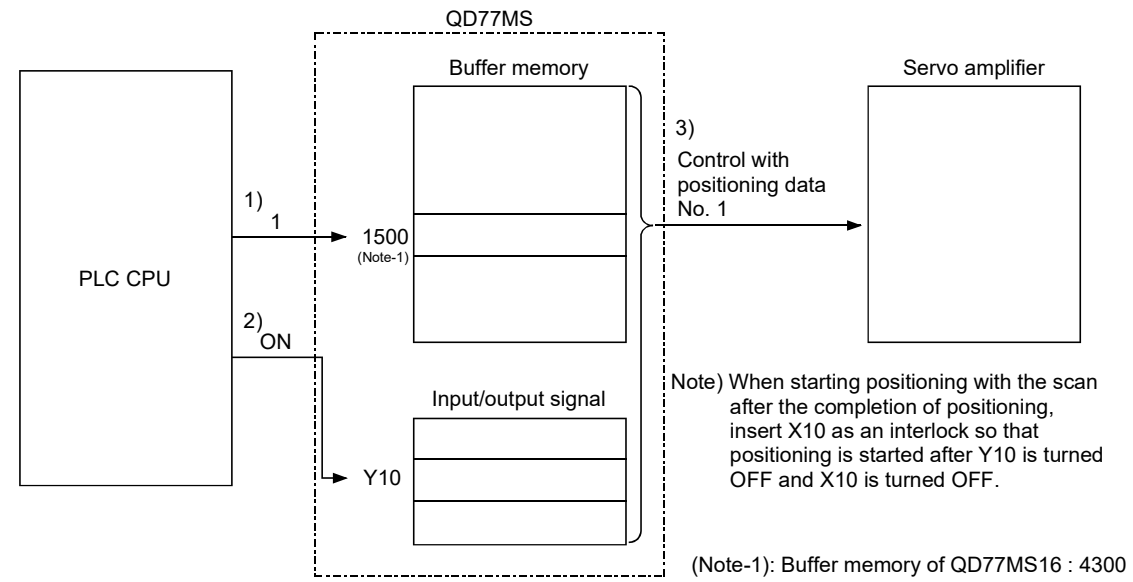

1) Set the "positioning start No." in "[Cd.3] Positioning start No." according to the control to be started.
(In the above example, set positioning data No. "1".)
2) Input the positioning start signal [Y10] or the external command signal.
3) The positioning data No. "1" will start.

Fig. 6.2 Procedures for starting control (for axis 1)

■ Servo ON conditions

Setting of servo parameter
↓
PLC READY signal [Y0] ON
↓
All axis servo ON [Y1] ON

■ Starting conditions

To start the control, the following conditions must be satisfied.
The necessary start conditions must be incorporated in the sequence program so that the control is not started when the conditions are not satisfied.

(1) Operation state

Monitor item		Operation state	Buffer memory address	
			QD77MS2 QD77MS4	QD77MS16
[Md.26]	Axis operation status	"0: Standby" or "1: Stopped"	809+100n	2409+100n

n: Axis No.-1

(2) Signal state

Signal name		Signal state		Device	
				QD77MS2 QD77MS4	QD77MS16
Interface signal	PLC READY signal	ON	PLC CPU preparation completed	Y0	
	READY signal	ON	QD77MS preparation completed	X0	
	All axis servo ON	ON	All axis servo ON	Y1	
	Synchronization flag ＊	ON	QD77MS buffer memory Accessible	X1	
	Axis stop signal	OFF	Axis stop signal is OFF	Y4 to Y7	[Cd.180] Axis stop
	M code ON signal	OFF	M code ON signal is OFF	X4 to X7	[Md.31] Status: b12
	Error detection signal	OFF	There is no error	X8 to XB	[Md.31] Status: b13
	BUSY signal	OFF	BUSY signal is OFF	XC to XF	X10 to X1F
	Start complete signal	OFF	Start complete signal is OFF	X10 to X13	[Md.31] Status: b14
External signal	Forced stop input signal	ON	There is no forced stop input	–	
	Stop signal	OFF	Stop signal is OFF	–	
	Upper limit (FLS)	ON	Within limit range	–	
	Lower limit (RLS)	ON	Within limit range	–	

＊: When the synchronous setting of the PLC CPU is made in the nonsynchronous mode, this must be provided as an interlock.
When it is made in the synchronous mode, no interlock must be provided in the program because the flag is turned ON when calculation is run on the PLC CPU.

[1] Starting by inputting positioning start signal

■ Operation when starting

(1) When the positioning start signal turns ON, the start complete signal and BUSY signal turn ON, and the positioning operation starts.
It can be seen that the axis is operating when the BUSY signal is ON.

(2) When the positioning start signal turns OFF, the start complete signal also turns OFF.
If the positioning start signal is ON even after positioning is completed, the start complete signal will remain ON.

(3) If the positioning start signal turns ON again while the BUSY signal is ON, the warning "Operating start" (warning code: 100) will occur.

(4) The process taken when positioning is completed will differ according to case (a) and (b) below.

(a) When next positioning is not to be carried out
- If a dwell time is set, the system will wait for the set time to pass, and then positioning will be completed.
- When positioning is completed, the BUSY signal will turn OFF and the positioning complete signal will turn ON. However, when using speed control or when the positioning complete signal ON time is "0", the signal will not turn ON.
- When the positioning complete signal ON time is passed, the positioning complete signal will turn OFF.

(b) When next positioning is to be carried out
- If a dwell time is set, the system will wait for the set time to pass.
- When the set dwell time is passed, the next positioning will start.

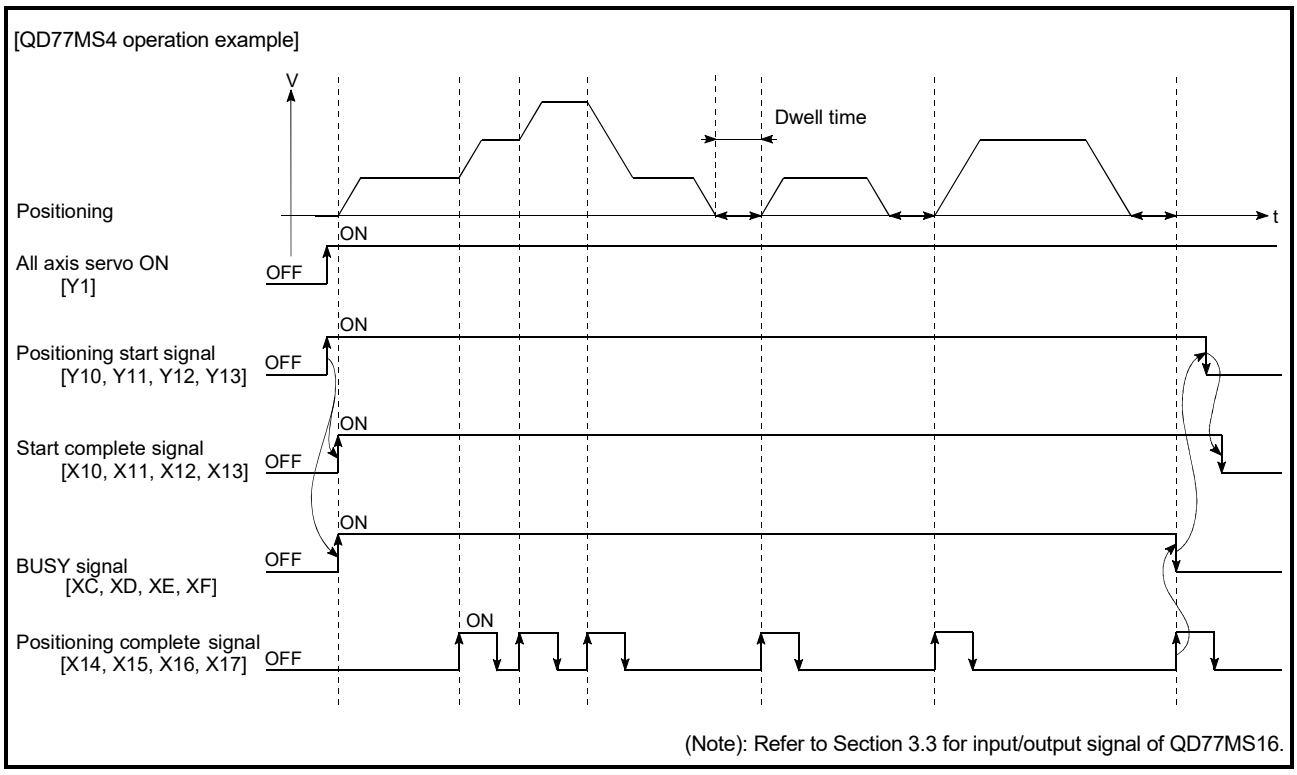

Fig. 6.3 ON/OFF timing of each signal at start of positioning

POINT

The BUSY signal turns ON even when position control of movement amount 0 is executed. However, since the ON time is short, the ON status may not be detected in the sequence program.
(The ON status of the start complete signal, positioning complete signal and M code ON signal can be detected in the sequence program.)

■ Starting time chart

The time chart for starting each control is shown below.

(1) Time chart for starting "machine HPR"

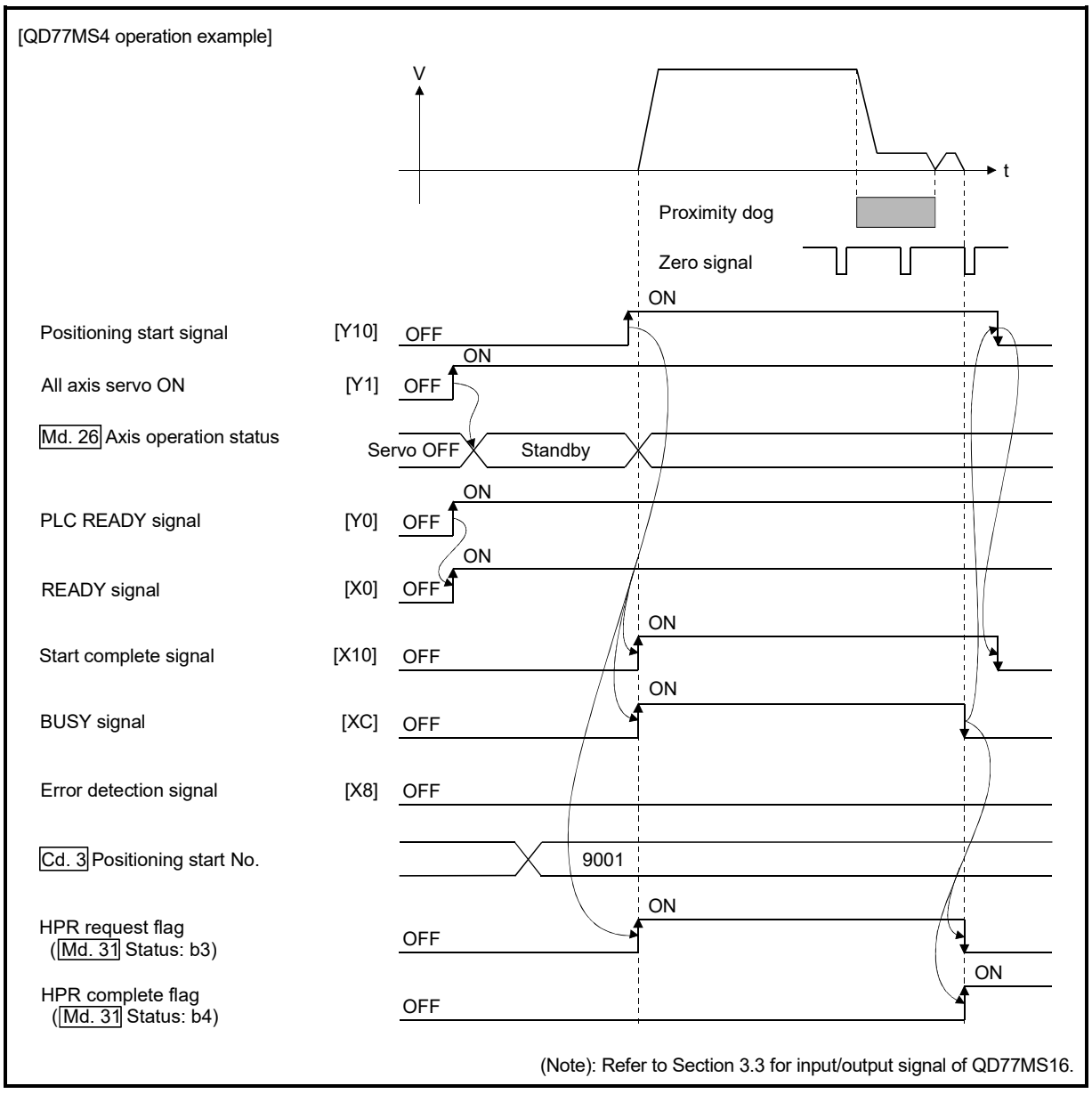

Fig. 6.4 Time chart for starting "machine HPR"

(2) Time chart for starting "fast HPR"

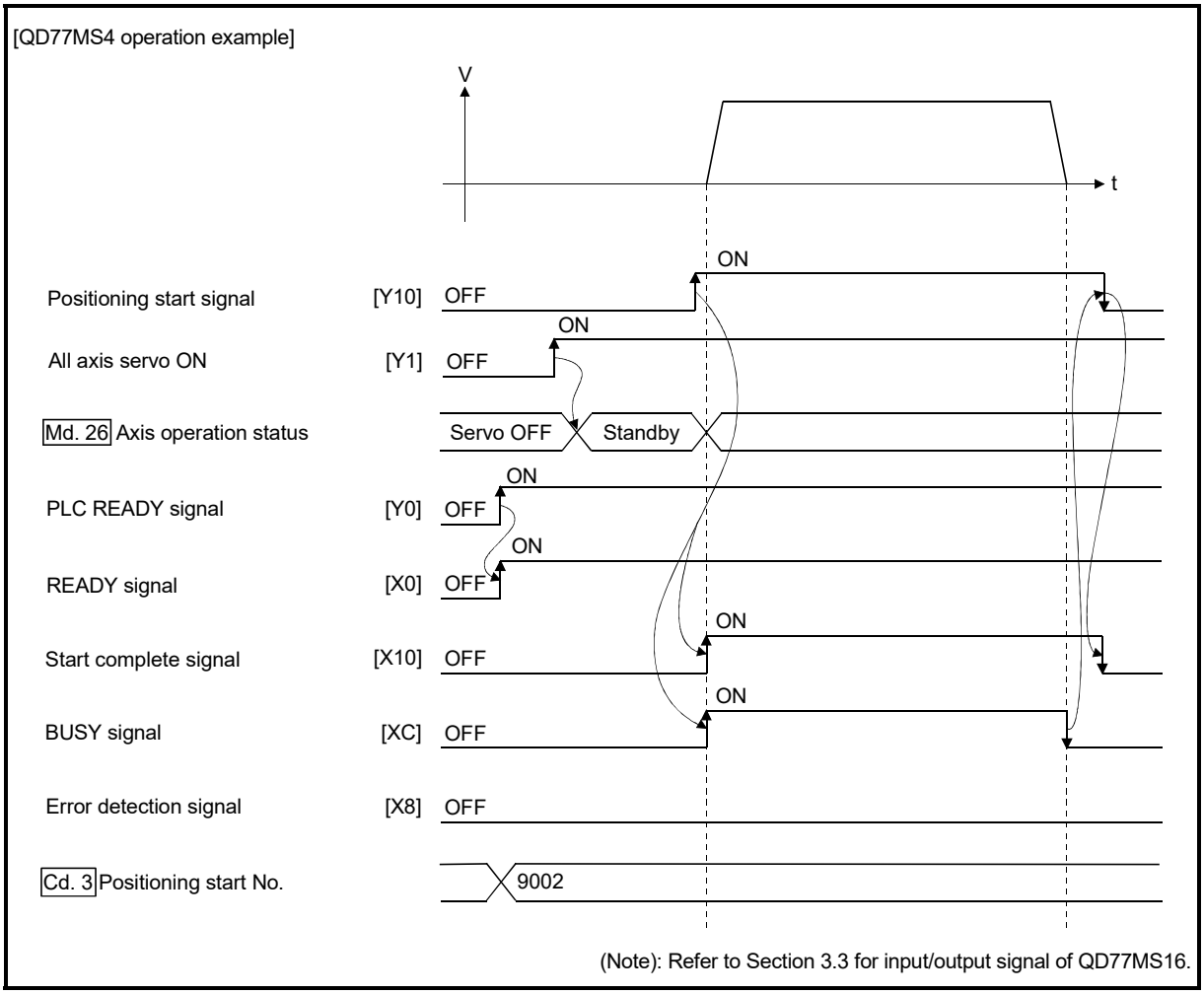

Fig. 6.5 Time chart for starting "fast HPR"

(3) Time chart for starting "major positioning control"

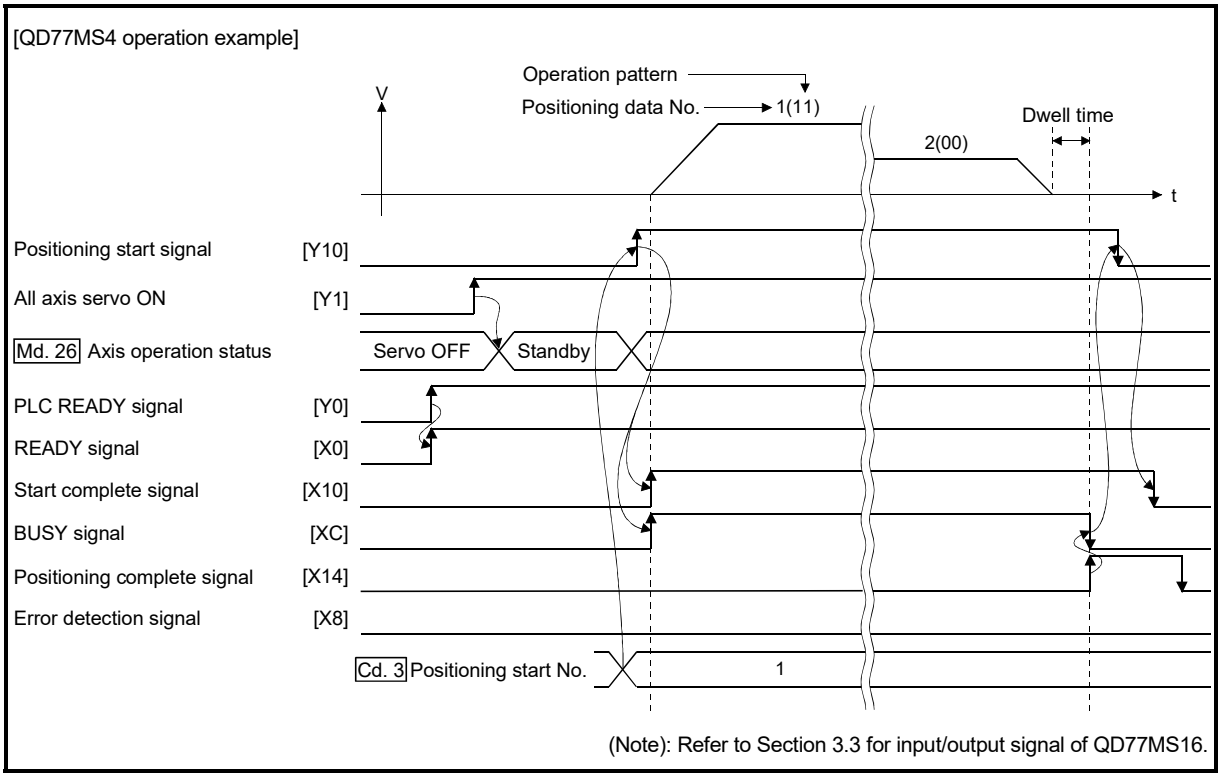

Fig. 6.6 Time chart for starting "major positioning control"

(4) Time chart for starting "speed-position switching control"

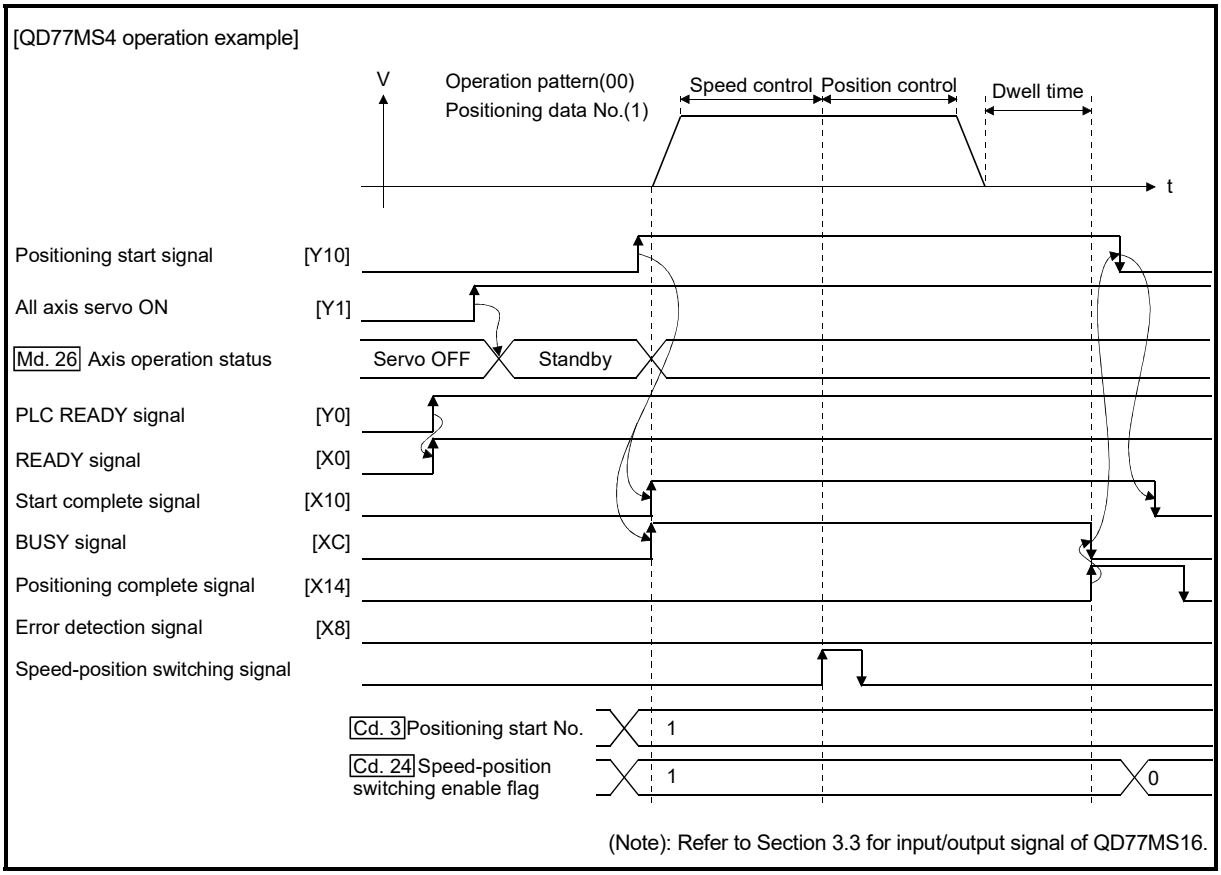

Fig. 6.7 Time chart for starting "speed-position switching control"

(5) Time chart for starting "position-speed switching control"

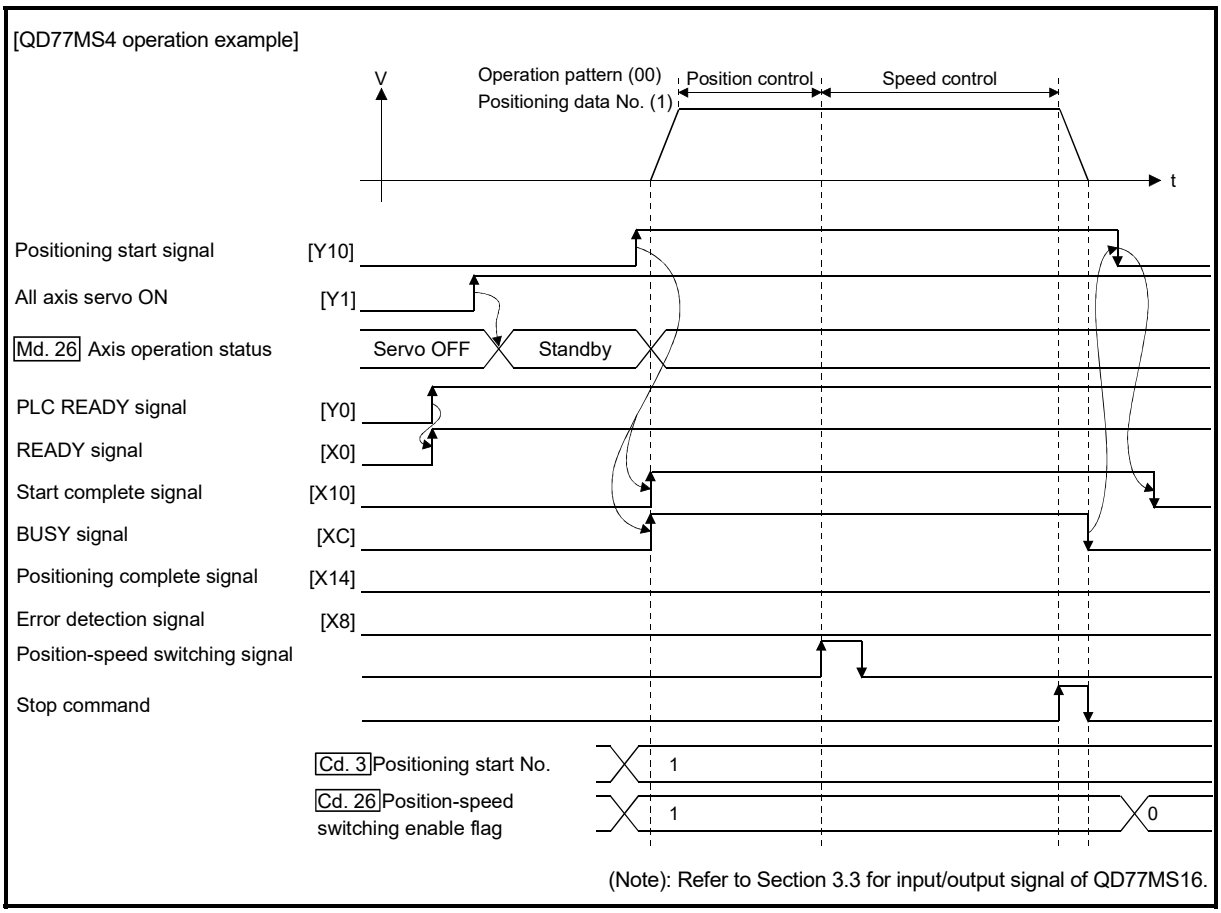

Fig. 6.8 Time chart for starting "position-speed switching control"

■ Machine HPR operation timing and process time

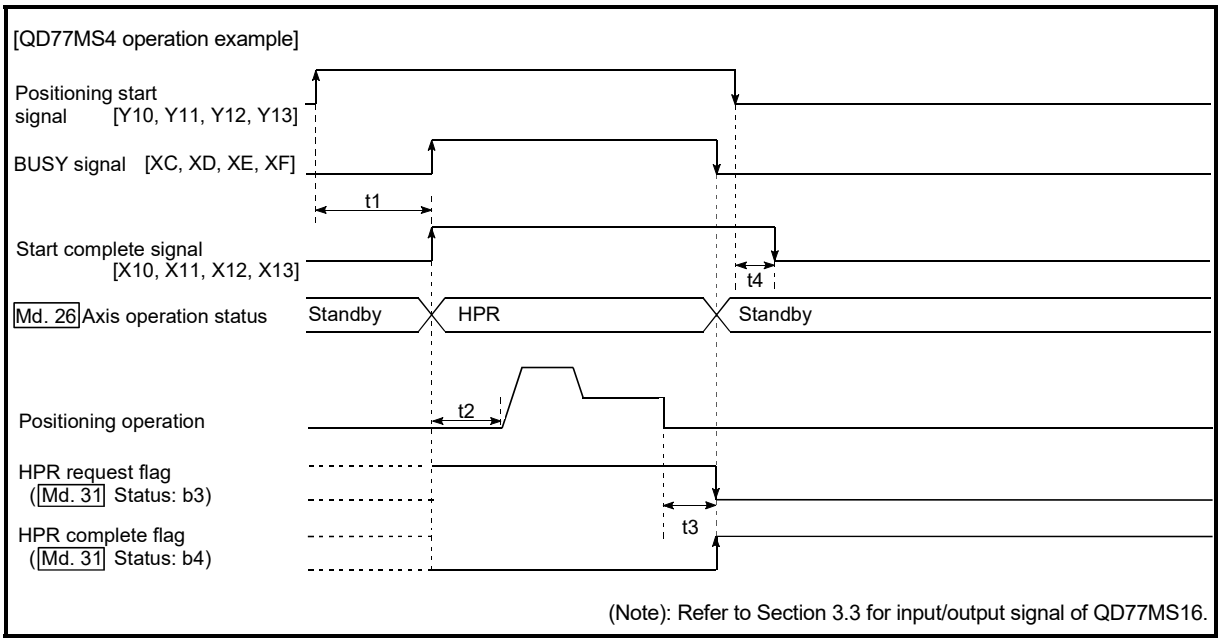

Fig. 6.9 Machine HPR operation timing and process time

Normal timing time Unit: [ms]

	Operation cycle	t1	t2	t3	t4
QD77MS2	0.88	0.2 to 0.3	1.8 to 2.7	0 to 0.9	0 to 0.9
	1.77	0.2 to 0.3	2.7 to 3.9	0 to 1.8	0 to 0.9
QD77MS4	0.88	0.2 to 0.3	1.8 to 2.7	0 to 0.9	0 to 0.9
	1.77	0.2 to 0.3	2.7 to 3.9	0 to 1.8	0 to 0.9
QD77MS16	0.88	0.3 to 1.4	1.8 to 2.7	0 to 0.9	0 to 0.9
	1.77	0.3 to 1.4	3.2 to 3.9	0 to 1.8	0 to 1.8

- The t1 timing time could be delayed depending on the operating conditions of the other axis.

■ Position control operation timing and process time

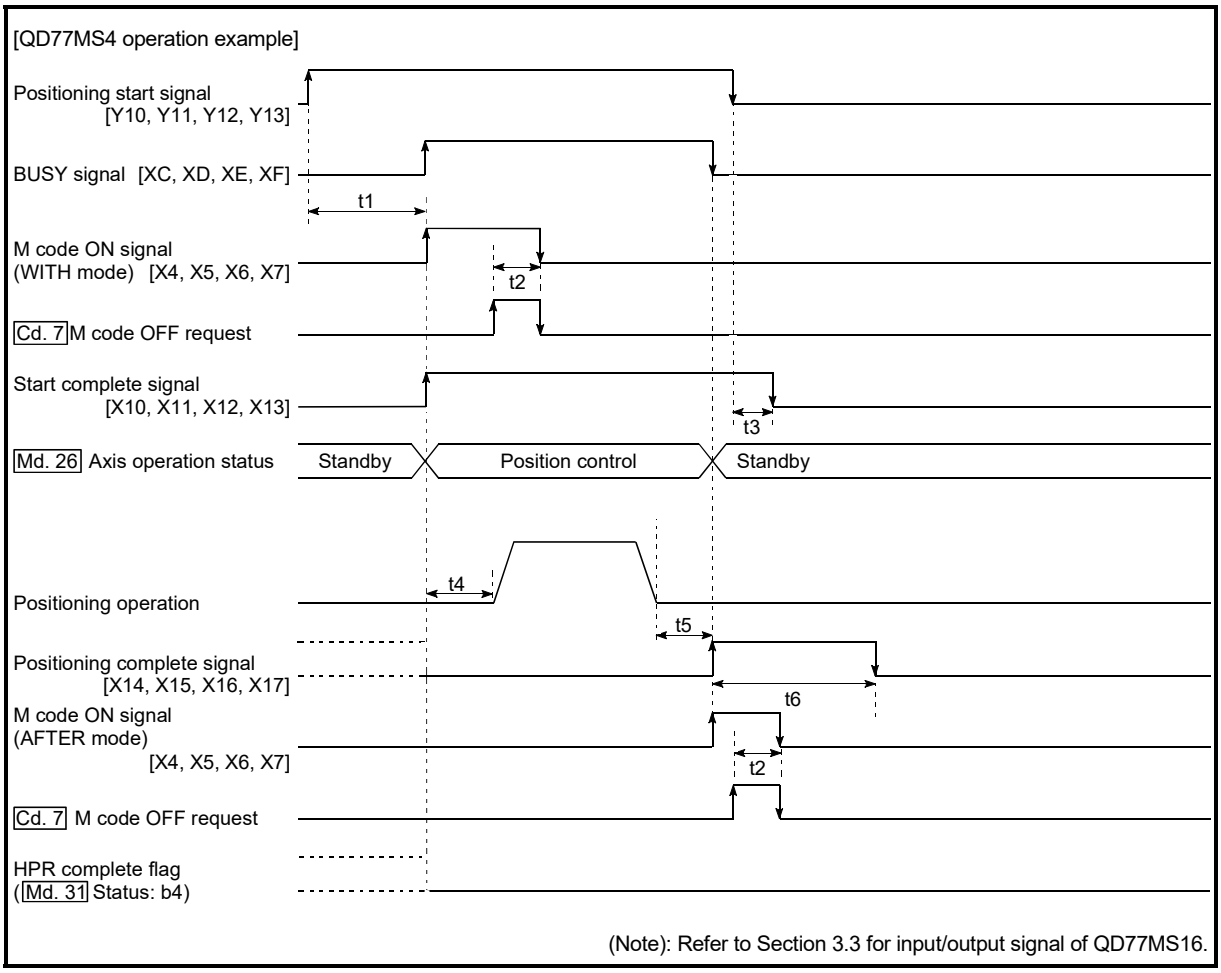

Fig. 6.10 Position control operation timing and process time

When the positioning start signal turns ON, if the "positioning complete signal" or "HPR complete flag" are already ON, the "positioning complete signal" or "HPR complete flag" will turn OFF when the positioning start signal turns ON.

Normal timing time Unit: [ms]

	Operation cycle	t1	t2	t3	t4	t5	t6
QD77MS2	0.88	0.2 to 0.3	0 to 0.9	0 to 0.9	1.8 to 2.7	0 to 0.9	Follows parameters
	1.77	0.2 to 0.3	0 to 1.8	0 to 1.8	2.5 to 3.9	0 to 1.8	Follows parameters
QD77MS4	0.88	0.2 to 0.3	0 to 0.9	0 to 0.9	1.8 to 2.7	0 to 0.9	Follows parameters
	1.77	0.2 to 0.3	0 to 1.8	0 to 1.8	2.5 to 3.9	0 to 1.8	Follows parameters
QD77MS16	0.88	0.3 to 1.4	0 to 0.9	0 to 0.9	1.8 to 2.7	0 to 0.9	Follows parameters
	1.77	0.3 to 1.4	0 to 1.8	0 to 1.8	3.2 to 3.9	0 to 1.8	Follows parameters

- The t1 timing time could be delayed depending on the operating conditions of the other axis.

[2] Starting by inputting external command signal

When starting positioning control by inputting the external command signal, the start command can be directly input into the Simple Motion module. This allows the variation time equivalent to one scan time of the PLC CPU to be eliminated. This is an effective procedure when operation is to be started as quickly as possible with the start command or when the starting variation time is to be suppressed. To start positioning control by inputting the external command signal, set the "data required to be set" and then turn ON the external command signal.

■ Restrictions

When starting by inputting the external command signal, the start complete signal will not turn ON.

■ Data required to be set

Set the following data in advance.

Setting item		Setting value	Setting details	Buffer memory address
[Pr.42]	External command function selection	0	Set to "0: External positioning start".	62+150n

n: Axis No.-1

∗: Set the external command signal (DI) in "[Pr.95] External command signal selection" at QD77MS16 use.
Refer to Chapter 5 "Data Used for Positioning Control" for details on the setting details.

Set "[Cd.3] Positioning start No." and enable "[Cd.8] External command valid" with a program. Then, turn ON the external command signal (DI).

Setting item		Setting value	Setting details	Buffer memory address	
				QD77MS2 QD77MS4	QD77MS16
[Cd.3]	Positioning start No.	1 to 600	Set the positioning data No. to be started.	1500+100n	4300+100n
[Cd.8]	External command valid	1	Set to "1: Validates an external command.".	1505+100n	4305+100n

n: Axis No.-1

■ Starting time chart

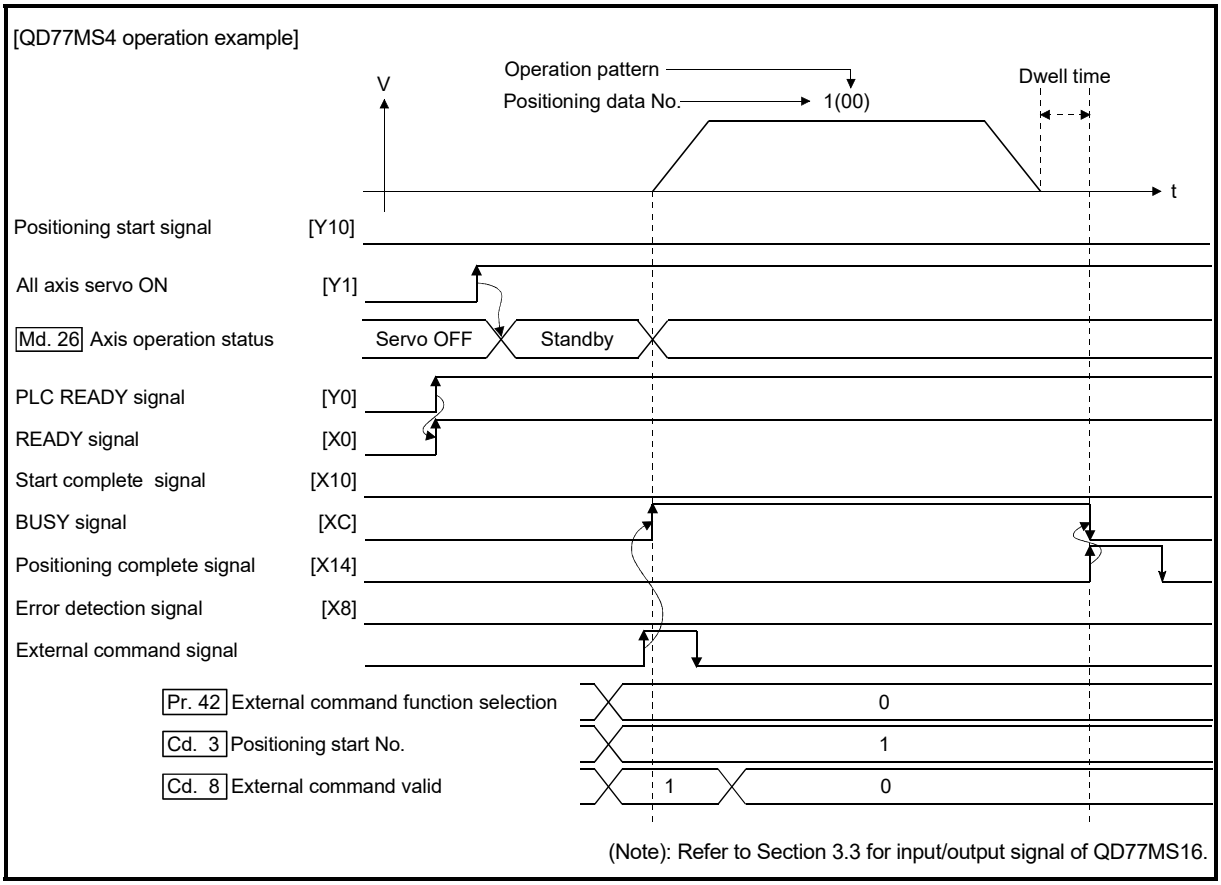

Fig. 6.11 Time chart for starting with external start signal

6.5.4 Continuous operation interrupt program

During positioning control, the control can be interrupted during continuous positioning control and continuous path control (continuous operation interrupt function). When "continuous operation interruption" is execution, the control will stop when the operation of the positioning data being executed ends. To execute continuous operation interruption, set "1: Interrupts continuous operation control or continuous path control." for "[Cd.18] Interrupt request during continuous operation".

[1] Operation during continuous operation interruption

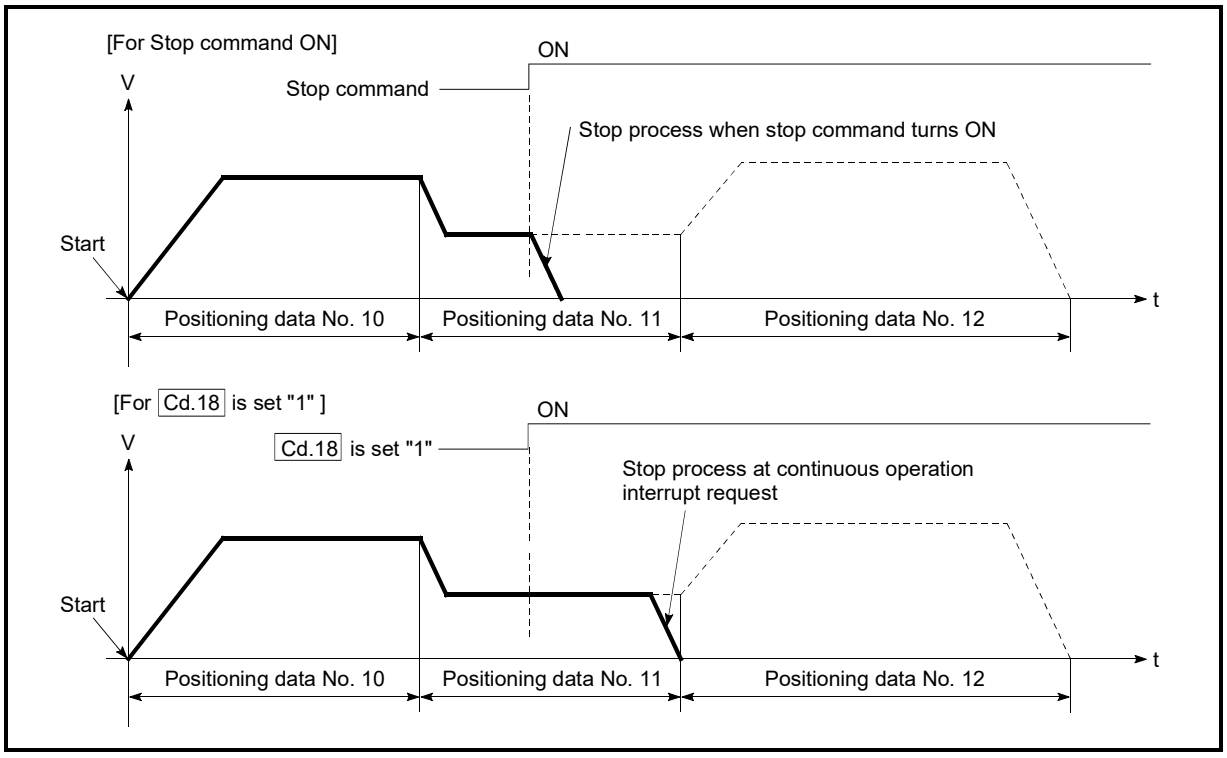

Fig. 6.12 Operation during continuous operation interruption

[2] Restrictions

(1) When the "continuous operation interrupt request" is executed, the positioning will end.
Thus, after stopping, the operation cannot be "restarted".
When "[Cd.6] Restart command" is issued, the warning "Restart not possible" (warning code: 104) will occur.

(2) Even if the stop command is turned ON after executing the "continuous operation interrupt request", the "continuous operation interrupt request" cannot be canceled.
Thus, if "restart" is executed after stopping by turning the stop command ON, the operation will stop when the positioning data No. where "continuous operation interrupt request" was executed is completed.

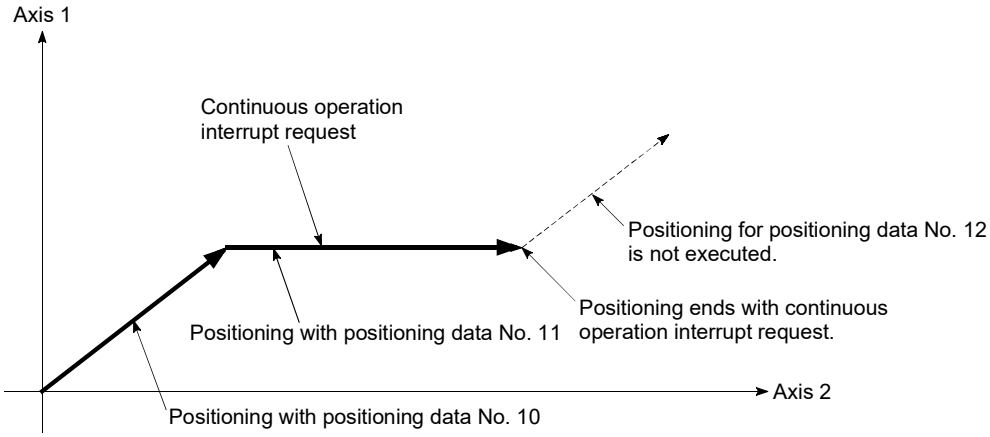

(3) If the operation cannot be decelerated to a stop because the remaining distance is insufficient when "continuous operation interrupt request" is executed with continuous path control, the interruption of the continuous operation will be postponed until the positioning data shown below.

- Positioning data No. have sufficient remaining distance
- Positioning data No. for positioning complete (pattern: 00)
- Positioning data No. for continuous positioning control (pattern: 01)

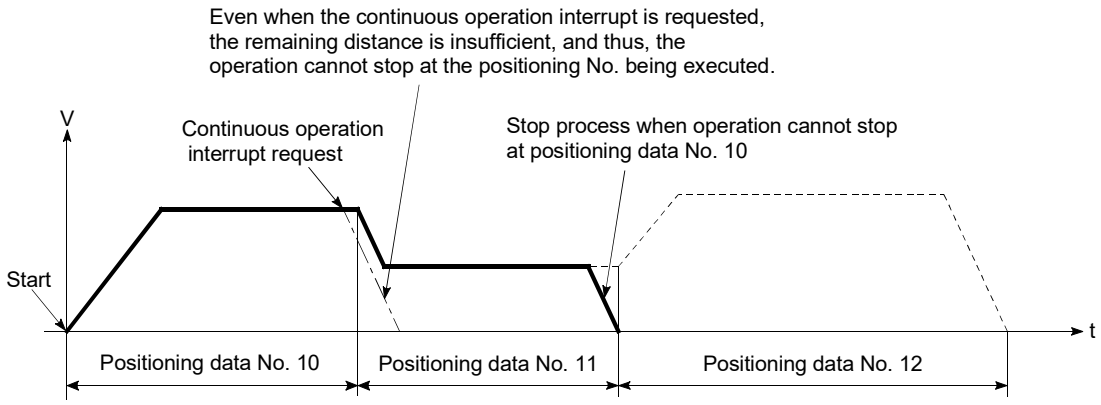

(4) When operation is not performed (BUSY signal is OFF), the interrupt request during continuous operation is not accepted. It is cleared to 0 at a start or restart.

[3] Control data requiring settings

Set the following data to interrupt continuous operation.

Setting item		Setting value	Setting details	Buffer memory address	
				QD77MS2 QD77MS4	QD77MS16
[Cd.18]	Interrupt request during continuous operation	1	Set "1: Interrupts continuous operation control or continuous path control.".	1520+100n	4320+100n

n: Axis No.-1

∗: Refer to Section 5.7 "List of control data" for details on the setting details.

6.5.5 Restart program

When a stop factor occurs during position control and the operation stops, the positioning can be restarted from the stopped position to the position control end point by using the "restart command" ([Cd.6] Restart command).
("Restarting" is not possible when "continuous operation is interrupted.")
This instruction is efficient when performing the remaining positioning from the stopped position in the positioning control of incremental method such as INC linear 1.
(Calculation of remaining distance is not required.)

[1] Restart operation

After a deceleration stop by the stop command is completed, write "1: Restarts" to the "[Cd.6] Restart command" with "[Md.26] Axis operation status" is "stopped" and the positioning restarts.

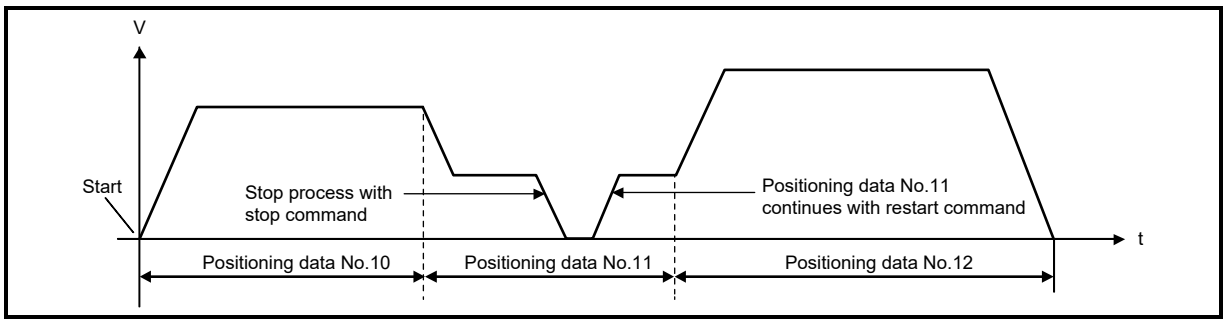

Fig. 6.13 Restart operation

[2] Restrictions

(1) Restarting can be executed only when the "[Md.26] Axis operation status" is "stopped (the deceleration stop by stop command is completed)".
If the axis operation is not "stopped", restarting is not possible.
In this case, the warning "Restart not possible" (warning code: 104) will occur, and the process at that time will be continued.

(2) Do not execute restart while the stop command is ON.
If restart is executed while stopped, the error "Stop signal ON at start" (error code: 106) will occur, and the "[Md.26] Axis operation status" will change to "Error".
Thus, even if the error is reset, the operation cannot be restarted.

(3) Restarting can be executed even while the positioning start signal is ON.
However, make sure that the positioning start signal does not change from OFF to ON while stopped.

(4) If the positioning start signal is changed from OFF to ON while "[Md.26] Axis operation status" is "stopped", the normal positioning (the positioning data set in "[Cd.3] Positioning start No.") is started.

(5) If positioning is ended with the continuous operation interrupt request, the operation cannot be restarted.
If restart is requested, the warning "Restart not possible" (warning code: 104) will occur.

(6) When stopped with interpolation operation, write "1: Restarts" into "[Cd.6] Restart command" for the reference axis, and then restart.
(7) If the PLC READY signal is changed from OFF to ON while stopped, restarting is not possible.
If restart is requested, the warning "Restart not possible" (warning code: 104) will occur.
(8) When the machine HPR and fast HPR is stopped, the error "HPR restart not possible" (error code: 209) will occur and the positioning cannot restarts.
(9) If any of reference partner axes executes the positioning operation once after interpolation operation stop, the warning "Restart not possible" (warning code: 104) will occur, and the positioning cannot restarts.

[3] Control data requiring setting

Set the following data to execute restart.

Setting item		Setting value	Setting details	Buffer memory address	
				QD77MS2 QD77MS4	QD77MS16
[Cd.6]	Restart command	1	Set "1: Restarts".	1503+100n	4303+100n

n: Axis No.-1

∗: Refer to Section 5.7 "List of control data" for details on the setting details.

[4] Starting conditions

The following conditions must be satisfied when restarting. (Assemble the required conditions into the sequence program as an interlock.)

(1) Operation state

- "[Md.26] Axis operation status" is "1: Stopped".

(2) Signal state

Signal name		Signal state		Device	
				QD77MS2 QD77MS4	QD77MS16
Interface signal	PLC READY signal	ON	PLC CPU preparation completed	Y0	
	READY signal	ON	QD77MS preparation completed	X0	
	All axis servo ON	ON	All axis servo ON	Y1	
	Synchronization flag ＊	ON	QD77MS buffer memory Accessible	X1	
	Axis stop signal	OFF	Axis stop signal is OFF	Y4 to Y7	[Cd.180] Axis stop
	M code ON signal	OFF	M code ON signal is OFF	X4 to X7	[Md.31] Status: b12
	Error detection signal	OFF	There is no error	X8 to XB	[Md.31] Status: b13
	BUSY signal	OFF	BUSY signal is OFF	XC to XF	X10 to X1F
	Start complete signal	OFF	Start complete signal is OFF	X10 to X13	[Md.31] Status: b14
External signal	Forced stop input signal	ON	There is no forced stop input	–	
	Stop signal	OFF	Stop signal is OFF	–	
	Upper limit (FLS)	ON	Within limit range	–	
	Lower limit (RLS)	ON	Within limit range	–	

＊: When the synchronous setting of the PLC CPU is made in the nonsynchronous mode, this must be provided as an interlock.
When it is made in the synchronous mode, no interlock must be provided in the program because the flag is turned ON when calculation is run on the PLC CPU.

[5] Time chart for restarting

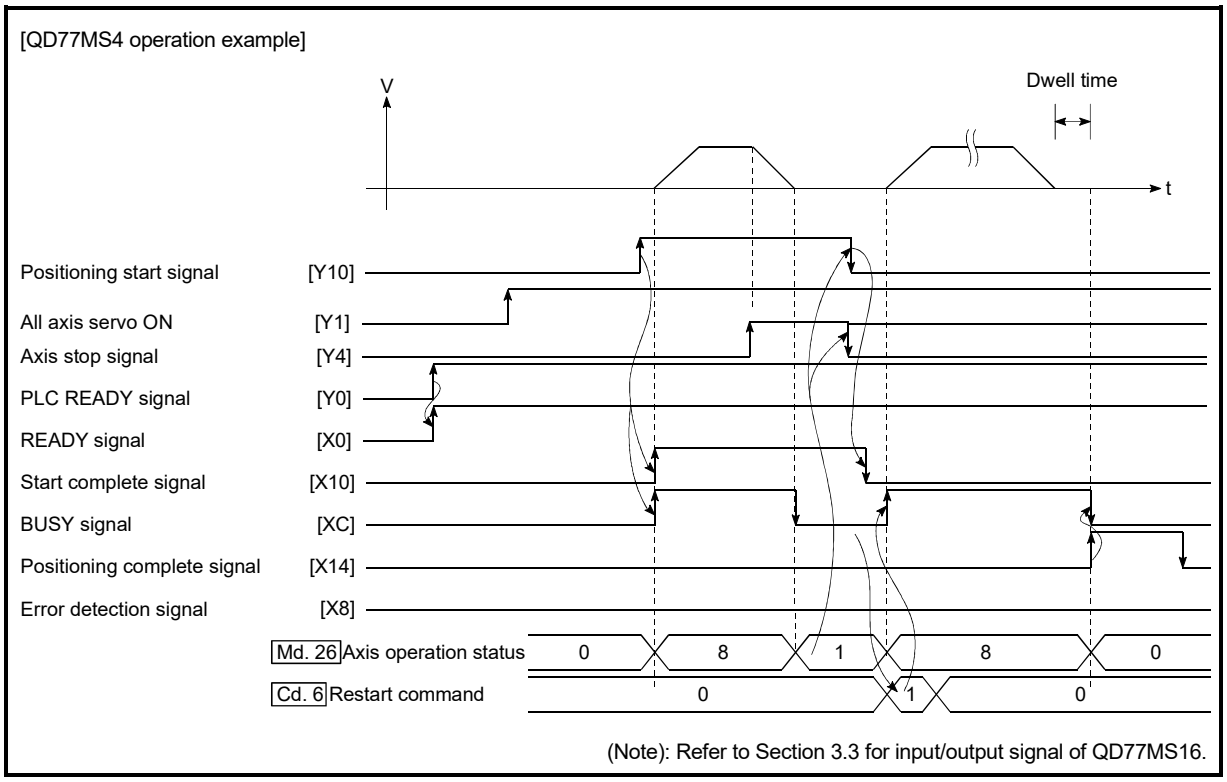

Fig. 6.14 Time chart for restarting

6.5.6 Stop program

The axis stop signal or stop signal from external input signal is used to stop the control. Create a program to turn ON the axis stop signal as the stop program.

Signal	QD77MS2	QD77MS4	QD77MS16
Axis stop signal	Y4, Y5	Y4, Y5, Y6, Y7	[Cd.180] Axis stop

Each control is stopped in the following cases.

(1) When each control is completed normally
(2) When the servo READY signal is turned OFF
(3) When a PLC CPU error occurs
(4) When the PLC READY signal is turned OFF
(5) When an error occurs in the Simple Motion module
(6) When control is intentionally stopped
(Stop signal from PLC CPU turned ON, "Stop signal" of external input signal turned ON, etc.)

The outline for the stop process in above cases is shown below. (Excluding "(1) When each control is completed normally" above.)
Refer to Section 12.1 "Speed-torque control" for the stop process during the speed control mode, torque control mode and continuous operation to torque control mode.

[1] Stop process

<table>
<tr><th colspan="2" rowspan="3">Stop cause</th><th rowspan="3">Stop axis</th><th rowspan="3">M code ON signal after stop</th><th rowspan="3">Axis operation status after stopping ([Md.26])</th><th colspan="6">Stop process</th></tr>
<tr><th colspan="2">HPR control</th><th rowspan="2">Major positioning control</th><th rowspan="2">High-level positioning control</th><th colspan="2">Manual control</th></tr>
<tr><th>Machine HPR control</th><th>Fast HPR control</th><th>JOG/ Inching operation</th><th>Manual pulse generator operation</th></tr>
<tr><td rowspan="4">Forced stop</td><td>Forced stop input to Simple Motion module</td><td>All axes</td><td>No change</td><td>Servo OFF</td><td colspan="5" rowspan="4">Immediate stop
For the stop method of the servo amplifier, refer to each servo amplifier instruction manual or manual.</td><td rowspan="4">—</td></tr>
<tr><td>Servo READY OFF
• Servo amplifier power supply OFF</td><td rowspan="3">Each axis</td><td rowspan="3">No change</td><td>Servo amplifier has not been connected</td></tr>
<tr><td>• Servo alarm</td><td>Error</td></tr>
<tr><td>• Forced stop input to servo amplifier</td><td>Servo OFF</td></tr>
<tr><td>Fatal stop
(Stop group 1)</td><td>Hardware stroke limit upper/lower limit error occurrence</td><td>Each axis</td><td>No change</td><td>Error</td><td colspan="5">Deceleration stop/rapid stop
(Select with "[Pr.37] Stop group 1 rapid stop selection".)</td><td>Deceleration stop</td></tr>
<tr><td rowspan="3">Emergency stop
(Stop group 2)</td><td>Error occurs in PLC CPU</td><td rowspan="3">All axes</td><td>No change</td><td rowspan="3">Error</td><td colspan="5" rowspan="3">Delegation stop/rapid stop
(Select with "[Pr.38] Stop group 2 rapid stop selection".)</td><td rowspan="3">Deceleration stop</td></tr>
<tr><td>PLC READY signal OFF</td><td>Turns OFF</td></tr>
<tr><td>Error in test mode</td><td>No change</td></tr>
<tr><td>Relatively safe stop
(Stop group 3)</td><td>Axis error detection
(Error other than stop group 1 or 2)</td><td>Each axis</td><td>No change</td><td>Error</td><td colspan="5" rowspan="4">Deceleration stop/rapid stop
(Select with "[Pr.39] Stop group 3 rapid stop selection".)</td><td rowspan="4">Deceleration stop</td></tr>
<tr><td rowspan="3">Intentional stop
(Stop group 3)</td><td>"Axis stop signal" ON from PLC CPU</td><td rowspan="3">Each axis</td><td rowspan="3">No change</td><td rowspan="3">Stopped
(Standby)</td></tr>
<tr><td>"Stop signal" of external input signal ON</td></tr>
<tr><td>"Stop" input from GX Works2</td></tr>
</table>

[2] Types of stop processes

The operation can be stopped with deceleration stop, rapid stop or immediate stop.

(1) Deceleration stop ∗1

The operation stops with "deceleration time 0 to 3" ([Pr.10], [Pr.28], [Pr.29], [Pr.30]).
Which time from "deceleration time 0 to 3" to use for control is set in positioning data ([Da.40]).

(2) Rapid stop

The operation stops with "[Pr.36] Rapid stop deceleration time".

(3) Immediate stop

The operation does not decelerate.
The Simple Motion module immediately stops the command. For the stop method of the servo amplifier, refer to each servo amplifier instruction manual or manual.

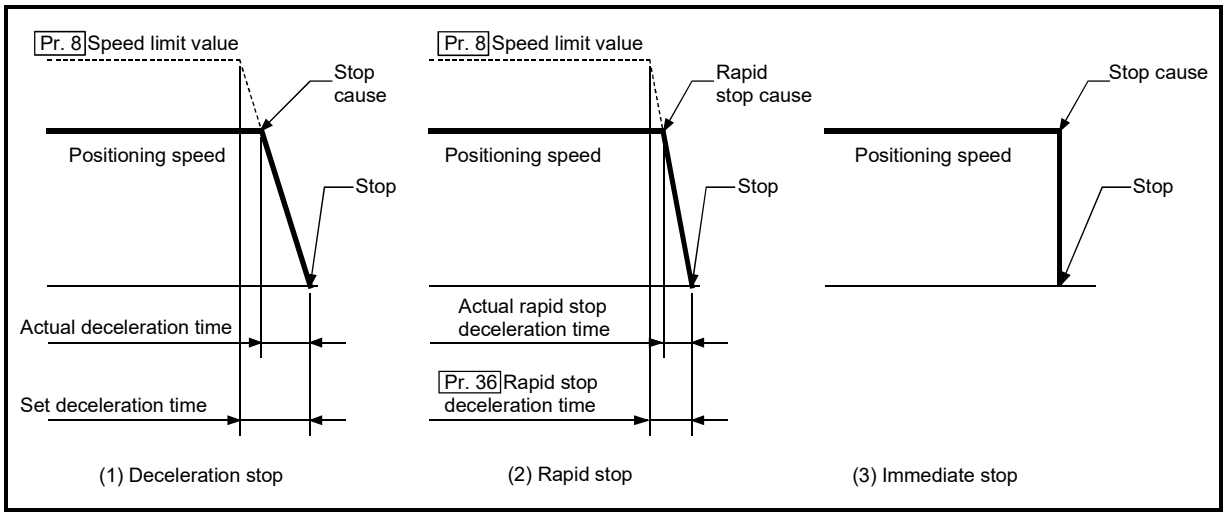

Fig. 6.15 Types of stop processes

REMARK

∗1 "Deceleration stop" and "rapid stop" are selected with the detailed parameter 2 "stop group 1 to 3 rapid stop selection". (The default setting is "deceleration stop".)

[3] Order of priority for stop process

The order of priority for the Simple Motion module stop process is as follows.

Deceleration stop < Rapid stop < Immediate stop

(1) If the deceleration stop command ON (stop signal ON) or deceleration stop cause occurs during deceleration to speed 0 (including automatic deceleration), operation changes depending on the setting of "[Cd.42] Stop command processing for deceleration stop selection".

(a) Manual control

Independently of the [Cd.42] setting, a deceleration curve is re-processed from the speed at stop cause occurrence.

(b) HPR control, positioning control

- When [Cd.42] = 0 (deceleration curve re-processing):
  A deceleration curve is re-processed from the speed at stop cause occurrence.
- When [Cd.42] = 1 (deceleration curve continuation):
  The current deceleration curve is continued after stop cause occurrence. (For details, refer to Section 13.7.9 "Stop command processing for deceleration stop function".)

(2) If the stop signal designated for rapid stop turns ON or a stop cause occurs during deceleration, the rapid stop process will start from that point. However, if the rapid stop deceleration time is longer than the deceleration time, the deceleration stop process will be continued even if a rapid stop cause occurs during the deceleration stop process.

Example

The process when a rapid stop cause occurs during deceleration stop is shown below.

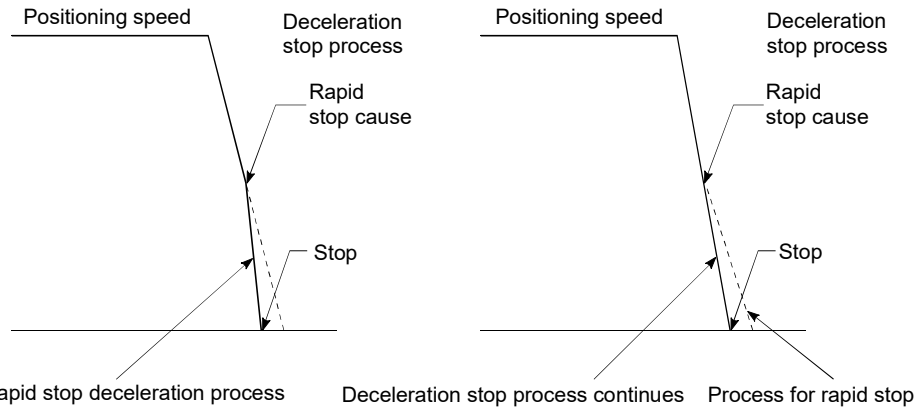

a) When deceleration stop time > rapid stop deceleration time

(b) When deceleration stop time < rapid stop deceleration time

[4] Inputting the stop signal during deceleration

(1) Even if stop is input during deceleration (including automatic deceleration), the operation will stop at that deceleration speed.
(2) If stop is input during deceleration for HPR, the operation will stop at that deceleration speed. If input at the creep speed, the operation will stop immediately.
(3) If a stop cause, designated for rapid stop, occurs during deceleration, the rapid stop process will start from that point.
The rapid stop process during deceleration is carried out only when the rapid stop time is shorter than the deceleration stop time.

Chapter 7 Memory Configuration and Data Process

The memory configuration and data transmission of Simple Motion module are explained in this chapter.

The Simple Motion module is configured of four memories. By understanding the configuration and roles of two memories, the internal data transmission process of Simple Motion module, such as "when the power is turned ON" or "when the PLC READY signal changes from OFF to ON", can be easily understood. This also allows the transmission process to be carried out correctly when saving or changing the data.

7.1 Configuration and roles of QD77MS memory 7- 2
7.1.1 Configuration and roles of QD77MS memory 7- 2
7.1.2 Buffer memory area configuration 7- 5
7.2 Data transmission process 7- 8

7.1 Configuration and roles of QD77MS memory

7.1.1 Configuration and roles of QD77MS memory

The Simple Motion module is configured of the following four memories.

Model	Memory configuration	Role	Area configuration													Backup
						Positioning data area		Block start data area		Servo parameter area						
			Parameter area	Monitor data area	Control data area	(No. 1 to 100)	(No. 101 to 600)	(No.7000 to 7001)	(No.7002 to 7004)	Servo parameter (When MR-J3(W)-B/ MR-J4(W)-B is used) ([Pr.100], PA, PB, PC)	Servo parameter (When MR-J3(W)-B/ MR-J4(W)-B is used) (PA19, PD, PE, PS, PF, Po, PL)	Servo parameter (When MR-J5(W)-B is used)	Synchronous control area	Cam area	
QD77MS2 QD77MS4	Buffer memory	Area that can be directly accessed with sequence program with PLC CPU.	○	○	○	○	○	○	○	○	○	–	○	–	Not possible
	Internal memory	Area that can be set only with GX Works2.	–	–	–	–	–	–	–	–	–	○ ＊1	–	–	Not possible
		Area that can be set only using buffer memory.	–	–	–	–	–	–	–	–	–	–	–	○	Not possible
	Flash ROM	Area for backing up data required for positioning.	○	–	–	○	○	○	○	–	–	–	○ ＊2	–	Possible
	Internal memory (nonvolatile)	Area for backing up servo parameter or cam data.	–	–	–	–	–	–	–	○	○	○	–	○	Possible
QD77MS16	Buffer memory	Area that can be directly accessed with sequence program with PLC CPU.	○	○	○	○	–	○	–	○	–	–	○	–	Not possible
	Internal memory	Area that can be set only with GX Works2.	–	–	–	–	○	–	○	–	○	○ ＊1	–	–	Not possible
		Area that can be set only using buffer memory.	–	–	–	–	–	–	–	–	–	–	–	○	Not possible
	Flash ROM	Area for backing up data required for positioning.	○	–	–	○	○	○	○	–	–	–	○ ＊2	–	Possible
	Internal memory (nonvolatile)	Area for backing up servo parameter or cam data.	–	–	–	–	–	–	–	○	○	○	–	○	Possible

○: Setting and storage area provided

– : Setting and storage area not provided

＊1: Can be set by using the axis control data ([Cd.130] to [Cd.132]).

＊2: Parameter only

Possible : Data is held even when power is turned OFF.

Not possible: Data is lost when power is turned OFF.

■ Details of areas

- Parameter area
  Area where parameters, such as positioning parameters and HPR parameters, required for positioning control are set and stored.

- Monitor data area
  Area where the operation status of positioning system is stored.

- Control data area
  Area where data for operating and controlling positioning system is set and stored.

- Positioning data area (No.1 to 600)
  Area where positioning data No.1 to 600 is set and stored.

- Block start data area (No.7000 to 7004)
  Area where information required only when carrying out block No. 7000 to 7004 high-level positioning is set and stored.

- Servo parameter area
  Area where parameters, such as servo parameters, required for positioning control on servo amplifier are set and stored.

- Synchronous control area (Note-1)
  Area where parameters and control data required for synchronous control are set and stored. Also, the operation status of synchronous control is stored.

- Cam area (Note-1)
  Area where cam data, etc., are set and stored. There are cam storage area and cam open area.

(Note-1): Refer to "MELSEC-Q/L QD77MS/QD77GF/LD77MS/LD77MH Simple Motion Module User's Manual (Synchronous Control)" for details of synchronous control area and cam area.

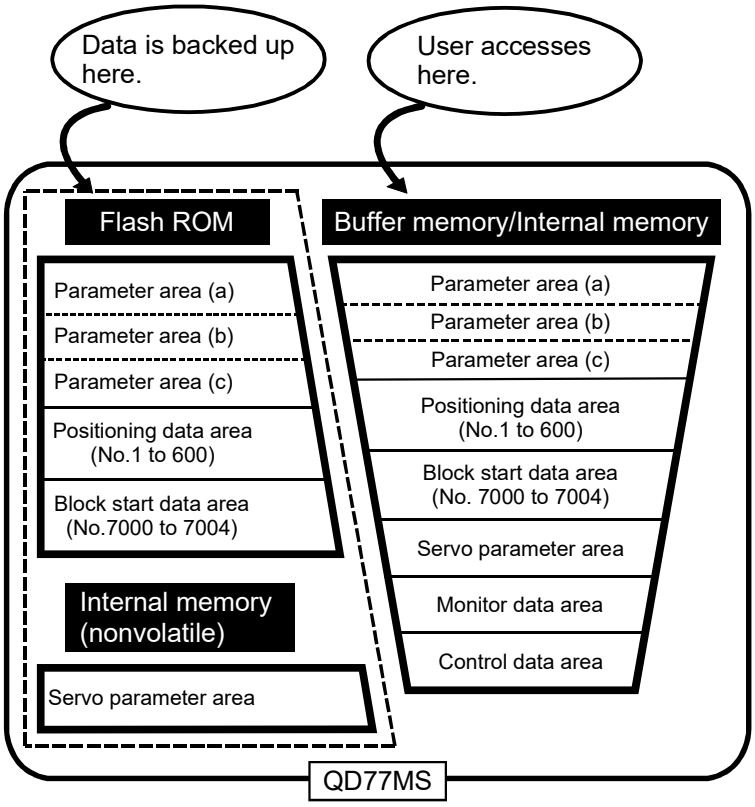

Area name	Description	
Parameter area (a)	Parameters validated when PLC READY signal [Y0] changes from OFF to ON	[Pr.1] to [Pr.7], [Pr.11] to [Pr.24], [Pr.43] to [Pr.57], [Pr.80] to [Pr.83], [Pr.89] to [Pr.95], [Pr.801], [Pr.805] to [Pr.807]
Parameter area (b)	Parameters validated when the TO command is executed from the PLC CPU (validated when the next control is started after the TO command is executed)	[Pr.8] to [Pr.10], [Pr.25] to [Pr.42], [Pr.84]
Parameter area (c)	Parameters validated with power supply ON/PLC CPU reset	[Pr.91] to [Pr.94], [Pr.96], [Pr.97], [Pr.114], [Pr.135], [Pr.136], [Pr.800] to [Pr.807]

7.1.2 Buffer memory area configuration

The buffer memory of Simple Motion module is configured of the following types of areas.

Buffer memory area configuration		Buffer memory address[*1]		Writing possibility
		QD77MS2/QD77MS4	QD77MS16	
Parameter area	Basic parameter	0+150n to 15+150n		Possible
	Detailed parameter	17+150n to 69+150n		
	HPR basic parameter	70+150n to 78+150n		
	HPR detailed parameter	80+150n to 91+150n		
	Expansion parameter	100+150n to 149+150n		
	Mark detection setting parameter	54000+20k to 54019+20k		
Monitor data area	System monitor	1200 to 1499 31300 to 31549	4000 to 4299 31300 to 31549	Not possible
	Axis monitor	800+100n to 899+100n	2400+100n to 2499+100n	
	Mark detection monitor data	54960+80k to 55039+80k		
Control data area	System control data	1900 to 1999	5900 to 5999	Possible
	Axis control data	1500+100n to 1599+100n	4300+100n to 4399+100n 30100+10n to 30109+10n	
	Mark detection control data	54640+10k to 54649+10k		
Positioning data area (No.1 to 100)	Positioning data	2000+6000n to 2999+6000n	6000+1000n to 6999+1000n	
Positioning data area (No.101 to 600)		3000+6000n to 7999+6000n	Set with GX Works2	
Block start data area (No.7000)	Block start data	26000+1000n to 26049+1000n	22000+400n to 22049+400n	
		26050+1000n to 26099+1000n	22050+400n to 22099+400n	
	Condition data	26100+1000n to 26199+1000n	22100+400n to 22199+400n	
Block start data area (No.7001)	Block start data	26200+1000n to 26249+1000n	22200+400n to 22249+400n	
		26250+1000n to 26299+1000n	22250+400n to 22299+400n	
	Condition data	26300+1000n to 26399+1000n	22300+400n to 22399+400n	
Block start data area (No.7002)	Block start data	26400+1000n to 26449+1000n	Set with GX Works2	
		26450+1000n to 26499+1000n		
	Condition data	26500+1000n to 26599+1000n		
Block start data area (No.7003)	Block start data	26600+1000n to 26649+1000n		
		26650+1000n to 26699+1000n		
	Condition data	26700+1000n to 26799+1000n		
Block start data area (No.7004)	Block start data	26800+1000n to 26849+1000n		
		26850+1000n to 26899+1000n		
	Condition data	26900+1000n to 26999+1000n		

Buffer memory area configuration			Buffer memory address[*1]		Writing possibility
			QD77MS2/QD77MS4	QD77MS16	
Servo parameter area	Servo series		30100+200n	28400+100n	Possible
	PA group[*2]	PA01 to PA18	30101+200n to 30118+200n	28401+100n to 28418+100n	
		PA19	30932+50n	Set with GX Works2	
		PA20 to PA32	64400+250n to 64412+250n	64400+70n to 64412+70n	
	PB group[*2]		30119+200n to 30163+200n	28419+100n to 28463+100n	
			64413+250n to 64431+250n	64413+70n to 64431+70n	
	PC group[*2]		30164+200n to 30195+200n	28464+100n to 28495+100n	
			64432+250n to 64463+250n	64432+70n to 64463+70n	
	PD group[*2]		30196+200n to 30227+200n	Set with GX Works2	
			64464+250n to 64479+250n		
	PE group[*2]		30228+200n to 30267+200n		
			64480+250n to 64503+250n		
	PS group[*2]		30268+200n to 30299+200n		
	PF group[*2]		30900+50n to 30915+50n		
			64504+250n to 64535+250n		
	Po group[*2]		30916+50n to 30931+50n		
			64536+250n to 64551+250n		
	PL group[*2]		64552+250n to 64599+250n		
Synchronous control area[*3]	Servo input axis parameter		32800+10n to 32805+10n		Possible
	Servo input axis monitor data		33120+10n to 33127+10n		Not possible
	Synchronous encoder axis parameter		34720+20j to 34735+20j		Possible
	Synchronous encoder axis control data		35040+10j to 35047+10j		Possible
	Synchronous encoder axis monitor data		35200+20j to 35212+20j		Not possible
	Synchronous control system control data		36320, 36322		Possible
	Synchronous parameter		36400+200n to 36513+200n		Possible
	Synchronous control monitor data		42800+40n to 42835+40n		Not possible
	Control data for synchronous control		44080+20n to 44090+20n		Possible
	Cam operation control data		45000 to 53791		Possible
	Cam operation monitor data		53800 to 53801		Not possible
	Command generation axis parameter		Set with GX Works2		Possible
	Command generation axis control data		61860+128n to 61987+128n		Possible
	Command generation axis monitor data		60900+120n to 61019+120n		Not possible
	Command generation axis positioning data		Set with GX Works2		Possible

n: Axis No.-1
k: Mark detection setting No.-1
j: Synchronous encoder axis No.-1

*1: Use of address Nos. skipped above is prohibited. If used, the system may not operate correctly.
*2: Since the servo parameters of MR-J5(W)-B are not in the buffer memory, use GX Works2 or axis control data to set them. Refer to "Appendix 6.6 Connection with MR-J5(W)-B" for details.
*3: Refer to "MELSEC-Q/L QD77MS/QD77GF/LD77MS/LD77MH Simple Motion Module User's Manual (Synchronous Control)" for details.

POINT

When the parameter of the servo amplifier side is changed by the following method, the Simple Motion module reads parameters automatically, and the data is transmitted to the servo parameter area in the buffer memory/internal memory and internal memory (nonvolatile).

(1) When changing the servo parameters by the auto tuning.

(2) When the servo parameter is changing after the MR Configurator2 is connected directly with the servo amplifier.

7.2 Data transmission process

The data is transmitted between the memories of Simple Motion module with steps (1) to (10) shown below.

∗: The data transmission patterns correspond to the numbers (1) to (10) in the following drawings.

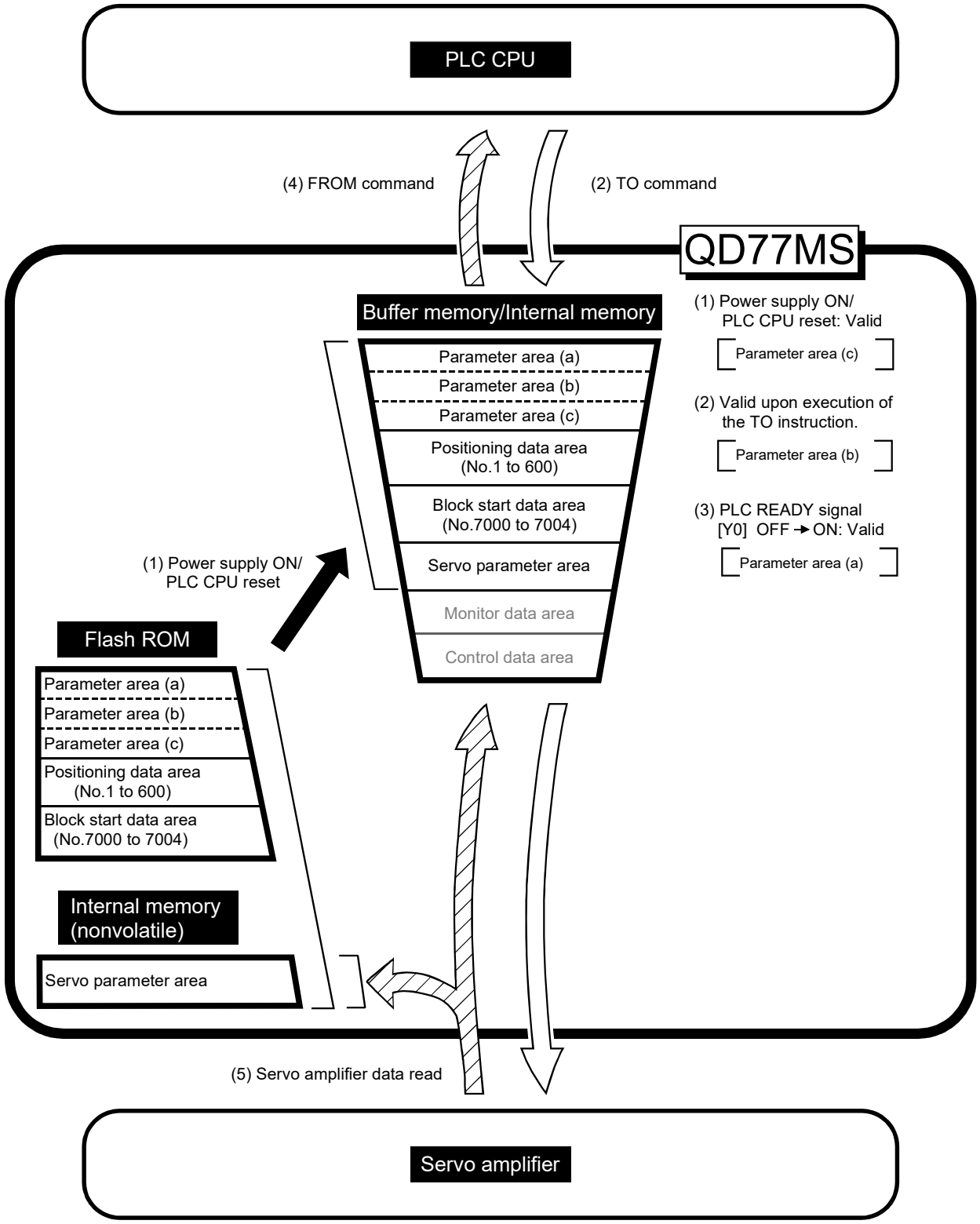

(1) Transmitting data when power is turned ON or PLC CPU is reset (➡)

When the power is turned ON or the PLC CPU is reset, the "parameters area (c)*1", "positioning data", "block start data" and "servo parameter" stored (backed up) in the flash ROM/internal memory (nonvolatile) are transmitted to the buffer memory and internal memory.

The value stored in the flash ROM is valid for "[Pr.96] Operation cycle setting".

*1: For details of area, refer to Section 7.1.1 "Configuration and roles of QD77MS memory".

(2) Transmitting data with TO command from PLC CPU (⇨)

The parameters or data is written from the PLC CPU to the buffer memory using the TO command*2. At this time, when the "parameter area (b)*3", "positioning data", "block start data", and "control data" are written into the buffer memory with the TO command, it is simultaneously valid.

*2: "Servo parameter (PA19, PD, PE, PS, PF, Po, PL)", "Positioning data (No.101 to 600)" and "Block start data (No.7002 to 7004)" can be set with only GX Works2 in QD77MS16.
When using MR-J5(W)-B, "servo parameter" can be set only from GX Works2 or the axis control data ([Cd.130] to [Cd.132]).

*3: For details of area, refer to Section 7.1.1 "Configuration and roles of QD77MS memory".

POINT

When a value other than "0" has been set to the servo parameter "[Pr.100] Servo series" inside the internal memory (nonvolatile), the power is turned ON or PLC CPU is reset to transmit the servo parameter inside the internal memory (nonvolatile) to the servo amplifier (servo amplifier LED indicates "b_").
After that, the TO instruction writes the servo parameter from the PLC CPU to the buffer memory so that the servo parameter in the buffer memory is not transmitted to the servo amplifier even if the PLC READY signal [Y0] is turned OFF then ON.
Change the servo parameter with the above method, after setting the servo parameter "[Pr.100] Servo series" inside the internal memory (nonvolatile), to "0".

(3) Validate parameters when PLC READY signal [Y0] changes from OFF to ON

When the PLC READY signal [Y0] changes from OFF to ON, the data stored in the buffer memory's "parameter area (a)*4" is validated.

*4: For details of area, refer to Section 7.1.1 "Configuration and roles of QD77MS memory".

POINT
The setting values of the parameters that correspond to parameter area (b) are valid when written into the buffer memory with the TO command. However, the setting values of the parameters that correspond to parameter area (a) are not validated until the PLC READY signal [Y0] changes from OFF to ON.

(4) Accessing with FROM command from PLC CPU (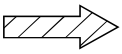)

The data is read from the buffer memory to the PLC CPU using the FROM command*5.

*5: "Servo parameter (PA19, PD, PE, PS, PF, Po, PL)", "Positioning data (No.101 to 600)" and "Block start data (No.7002 to 7004)" can be read with only GX Works2 in QD77MS16.
When using MR-J5(W)-B, "servo parameter" can be set only from GX Works2 or the axis control data ([Cd.130] to [Cd.132]).

(5) Reading the servo parameter from the servo amplifier (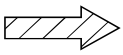)

When the parameter of the servo amplifier is changed, the servo parameter is read automatically from the servo amplifier to the buffer memory/internal memory and internal memory (nonvolatile).

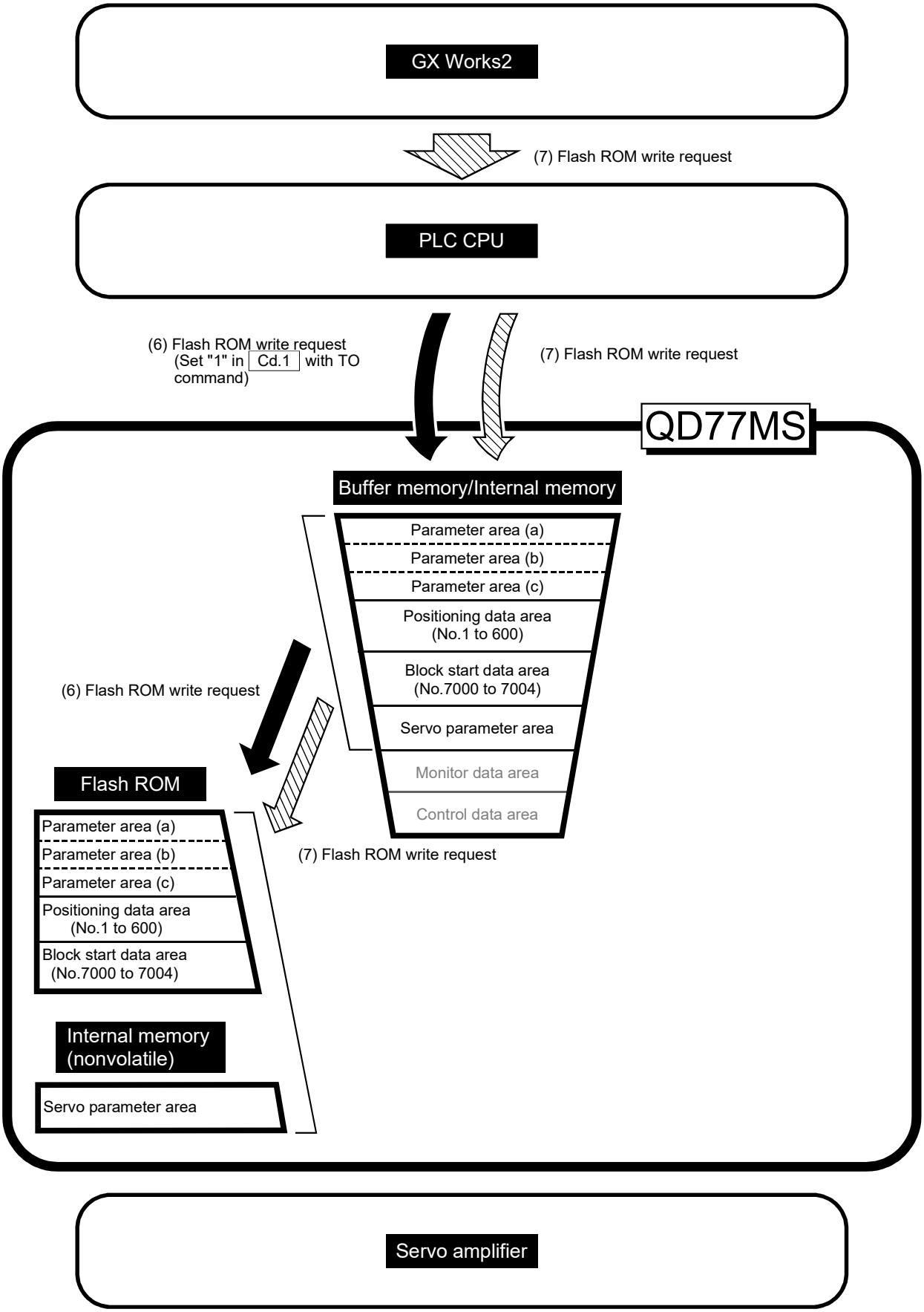
GX Works2
(7) Flash ROM write request
PLC CPU
(6) Flash ROM write request
(Set "1" in Cd.1 with TO command)
(7) Flash ROM write request
QD77MS
Buffer memory/Internal memory
Parameter area (a)
Parameter area (b)
Parameter area (c)
Positioning data area
(No.1 to 600)
Block start data area
(No.7000 to 7004)
Servo parameter area
Monitor data area
Control data area
(6) Flash ROM write request
Flash ROM
Parameter area (a)
Parameter area (b)
Parameter area (c)
Positioning data area
(No.1 to 600)
Block start data area
(No.7000 to 7004)
(7) Flash ROM write request
Internal memory
(nonvolatile)
Servo parameter area
Servo amplifier

(6) Writing the flash ROM by a PLC CPU request (➡)

The following transmission process is carried out by setting "1" in "[Cd.1] Flash ROM write request".

1) The "parameters", "positioning data (No. 1 to 600)", "block start data (No. 7000 to 7004)" and "servo parameter" in the buffer memory/internal memory area are transmitted to the flash ROM/internal memory (nonvolatile).

The writing to the flash ROM may also be carried out using a dedicated instruction "ZP.PFWRT". (Refer to Chapter 15 "Dedicated Instructions" for details.)

(7) Writing the flash ROM by a GX Works2 request (⇒)

The following transmission processes are carried out with the [flash ROM write request] from the GX Works2.

1) The "parameters", "positioning data (No. 1 to 600)", "block start data (No. 7000 to 7004)" and "servo parameter" in the buffer memory/internal memory area are transmitted to the flash ROM/internal memory (nonvolatile).

Note) This transmission process is the same as (6) above.

Important

(1) Do not turn the power OFF or reset the PLC CPU while writing to the flash ROM. If the power is turned OFF or the PLC CPU is reset to forcibly end the process, the data backed up in the flash ROM/internal memory (nonvolatile) will be lost.

(2) Do not write the data to the buffer memory/internal memory before writing to the flash ROM is completed.

(3) The number of writes to the flash ROM with the sequence program is 25 max. while the power is turned ON.
Writing to the flash ROM beyond 25 times will cause the error "Flash ROM write number error" (error code: 805).
Refer to Section 16.4 "List of errors" for details.

(4) Monitoring is the number of writes to the flash ROM after power supply ON by the "[Md.19] Number of write accesses to flash ROM".

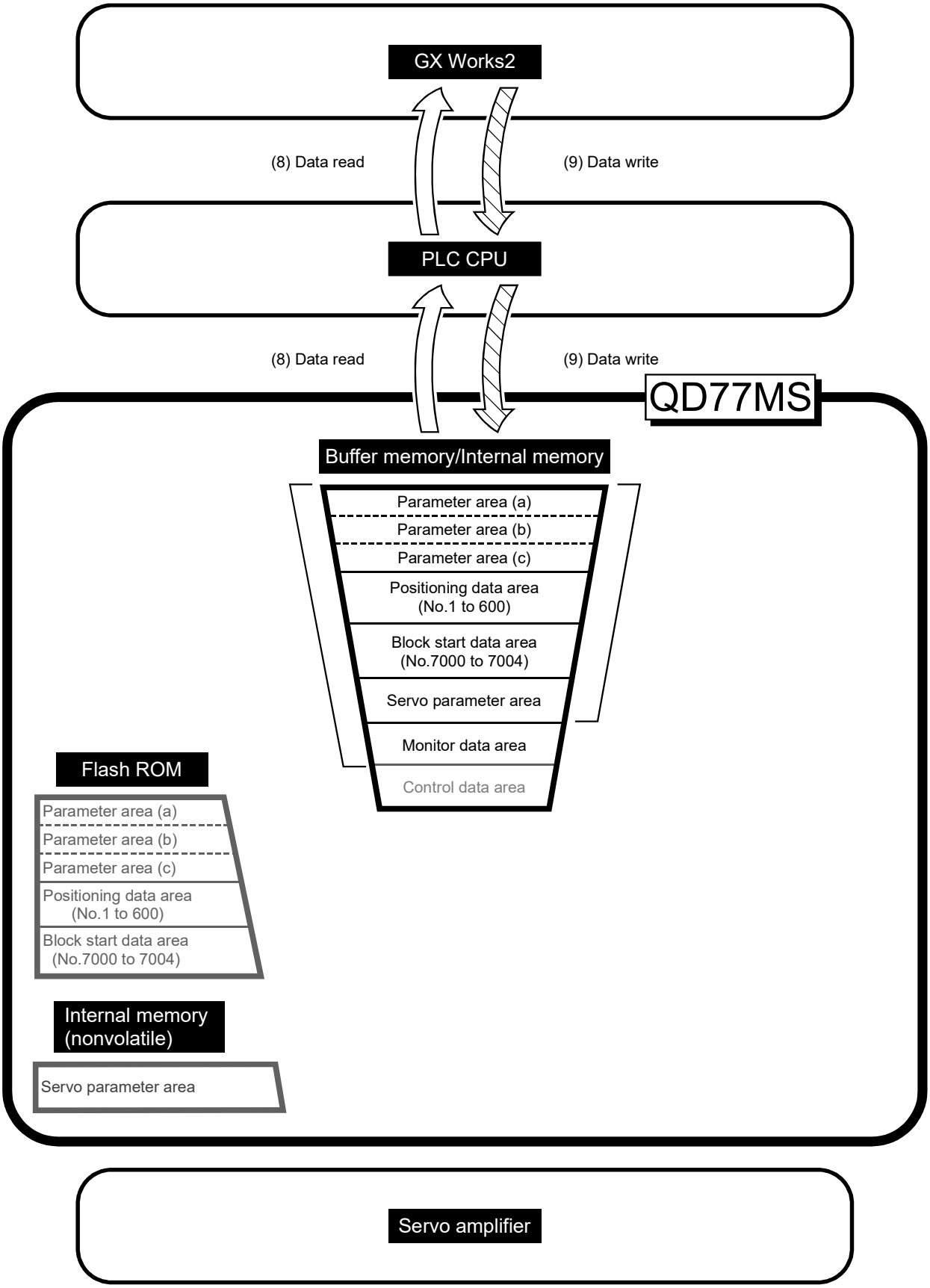
GX Works2
(8) Data read
(9) Data write
PLC CPU
(8) Data read
(9) Data write
QD77MS
Buffer memory/Internal memory
Parameter area (a)
Parameter area (b)
Parameter area (c)
Positioning data area
(No.1 to 600)
Block start data area
(No.7000 to 7004)
Servo parameter area
Monitor data area
Control data area
Flash ROM
Parameter area (a)
Parameter area (b)
Parameter area (c)
Positioning data area
(No.1 to 600)
Block start data area
(No.7000 to 7004)
Internal memory
(nonvolatile)
Servo parameter area
Servo amplifier

(8) Reading data from buffer memory/internal memory to GX Works2 (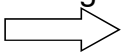)

The following transmission processes are carried out with the [Read from module (Read from QD77MS)] from the GX Works2.

1) The "parameters", "positioning data (No. 1 to 600)", "block start data (No. 7000 to 7004)" and "servo parameter" in the buffer memory/internal memory area are transmitted to the GX Works2 via the PLC CPU.

The following transmission processes are carried out with the [Monitor] from the GX Works2.

2) The "monitor data" in the buffer memory area is transmitted to the GX Works2 via the PLC CPU.

(9) Writing data from GX Works2 to buffer memory/internal memory (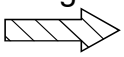)

The following transmission processes are carried out with the [Write to module (Write to QD77MS)] from the GX Works2.

1) The "parameters", "positioning data (No. 1 to 600)", "block start data (No. 7000 to 7004)" and "servo parameter" in the GX Works2 are transmitted to the buffer memory/internal memory via the PLC CPU.

At this time, when [Flash ROM automatic write] is set with the GX Works2, the transmission processes indicated with "(7) Writing the flash ROM by a GX Works2 request" are carried out.

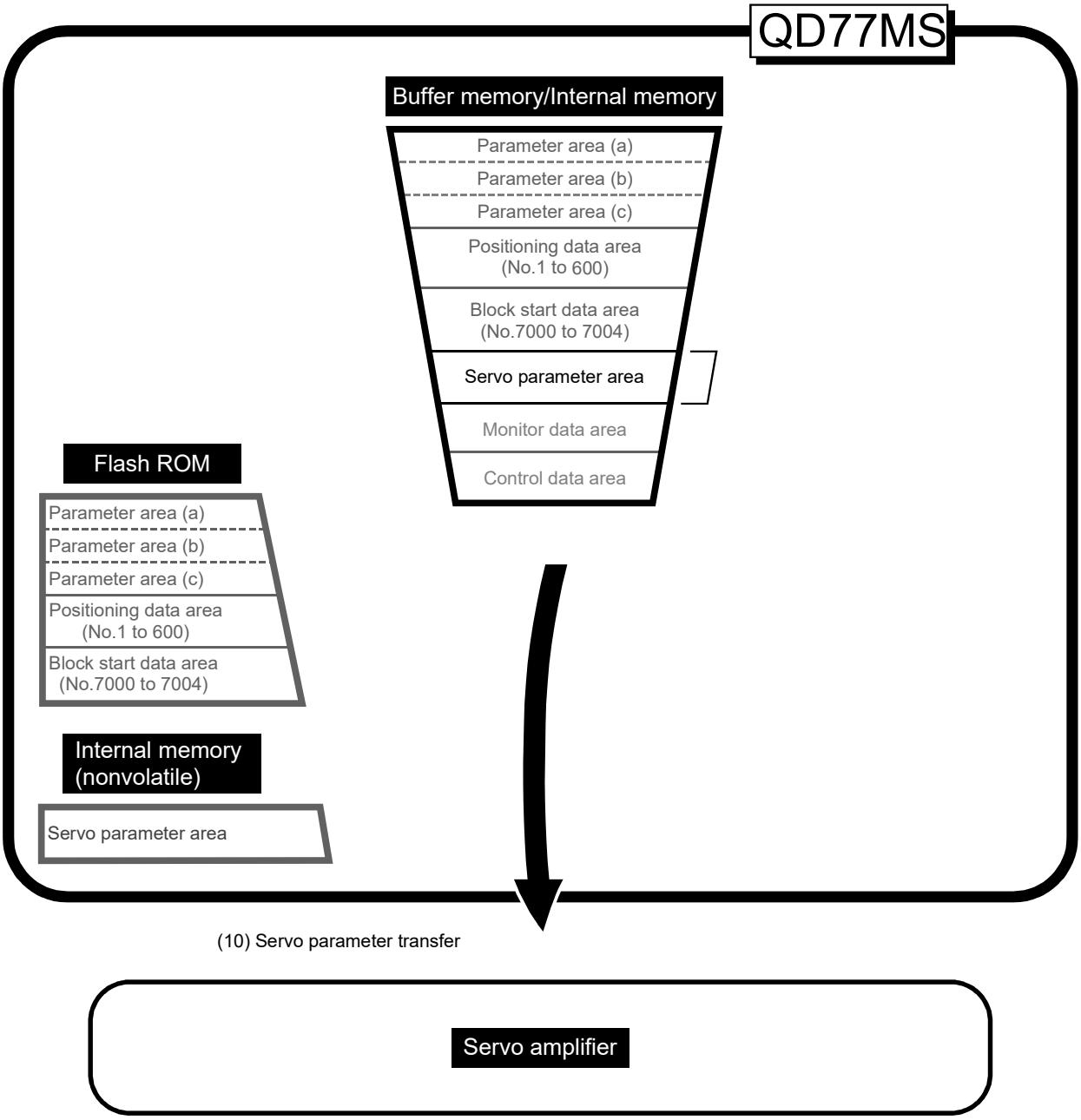
QD77MS
Buffer memory/Internal memory
Parameter area (a)
Parameter area (b)
Parameter area (c)
Positioning data area (No.1 to 600)
Block start data area (No.7000 to 7004)
Servo parameter area
Monitor data area
Control data area
Flash ROM
Parameter area (a)
Parameter area (b)
Parameter area (c)
Positioning data area (No.1 to 600)
Block start data area (No.7000 to 7004)
Internal memory (nonvolatile)
Servo parameter area
(10) Servo parameter transfer
Servo amplifier

(10) Transmitting servo parameter from the buffer memory/internal memory area to servo amplifier (➡)

The servo parameter in the buffer memory/internal memory area is transmitted to the servo amplifier by the following timing.

1) The servo parameter is transmitted to the servo amplifier when communications with servo amplifier start.
   The "expansion parameter" and "servo parameter" in the buffer memory area is transmitted to the servo amplifier.

2) The following servo parameters in the buffer memory/internal memory area are transmitted to the internal memory (nonvolatile) and servo amplifier when the PLC READY signal [Y0] turns from OFF to ON.
   - "Auto tuning mode (PA08)"
   - "Auto tuning response (PA09)"
   - "Feed forward gain (PB04)"
   - "Load to motor inertia ratio/load to motor mass ratio (PB06)"
   - "Model loop gain (PB07)"
   - "Position loop gain (PB08)"
   - "Speed loop gain (PB09)"
   - "Speed integral compensation (PB10)"
   - "Speed differential compensation (PB11)"

POINT

When the PLC READY signal [Y0] is turned ON, the error "SSCNET communication error" (error code: 1205) occurs, "Rotation direction selection/travel direction selection (PA14)" is changed by sequence program or the GX Works2 after the servo parameter is transmitted to servo amplifier (LED of the servo amplifier is indicated "b_", "C_", or "d_").
When "Rotation direction selection/travel direction selection (PA14)" is changed, transmit the servo parameter to servo amplifier.

■ About the communication start with servo amplifier

Communication with servo amplifier is valid when following condition is realized together.

1) The power of Simple Motion module and servo amplifier is turned ON.

2) When the servo parameter "[Pr.100] Servo series" inside the buffer memory area is set to the value other than "0" in Simple Motion module.

When the power is turned ON or the PLC CPU is reset, the data stored in the flash ROM/internal memory (nonvolatile) is transmitted to the buffer memory/internal memory.
Therefore the servo parameter "[Pr.100] Servo series" inside the internal memory (nonvolatile) is stored to the value other than "0", and communication with servo amplifier is started when the power is turn ON in order of the servo amplifier, Simple Motion module.
After the servo parameter stored in the internal memory (nonvolatile) is transmitted to the servo amplifier.

■ How to transfer the servo parameter setup from sequence program/GX Works2 to the servo amplifier

The servo series of servo parameter "[Pr.100] Servo series" inside the internal memory (nonvolatile) set to "0". (Initial value: "0")

The setting value of the parameters that correspond to the servo parameter "[Pr.100] Servo series" inside the internal memory (nonvolatile) becomes valid when the power is turned ON or the PLC CPU is reset, after the communication with servo amplifier is not started.

However, the PLC READY signal [Y0] is changed from OFF to ON after setting the servo parameters ("[Pr.100] Servo series": except for 0) with sequence program/GX Woroks2 the communication with servo amplifier starts.

■ How to transfer the servo parameter which wrote it in the internal memory (nonvolatile) to servo amplifier

Flash ROM writing carried out after the servo parameter is set up in the buffer memory/internal memory.

After that, when the power is turned ON or the PLC CPU is reset, the servo parameters stored in the internal memory (nonvolatile) is transmitted to the buffer memory/internal memory.

When the servo parameter is written in the internal memory (nonvolatile), it is unnecessary to use a setup from the sequence program/GX Works2.

■ Servo parameter of the buffer memory/internal memory

The followings show details about the operation timing and details at transmitting the servo parameter of the buffer memory/internal memory.

POINT

(1) When the servo parameter is written in the internal memory (nonvolatile), it is unnecessary to use a setup from the sequence program/GX Works2.

(2) Axis connection time varies depending on the number of axes and the servo amplifier's power supply ON timing. And, time when "20: Servo amplifier has not been connected/servo amplifier power OFF" is set in "[Md.26] Axis operation status" is also varies.

(1) When the servo amplifier's power supply is turned ON before the system's power supply ON.

(a) When the servo parameter "[Pr.100] Servo series" ≠ "0" is stored in the internal memory (nonvolatile).

Communication start timing to the servo amplifier: Initialization completion (Fig. 7.1 (A))

Transfer the servo parameter : The data stored (backed up) in the internal memory (nonvolatile).

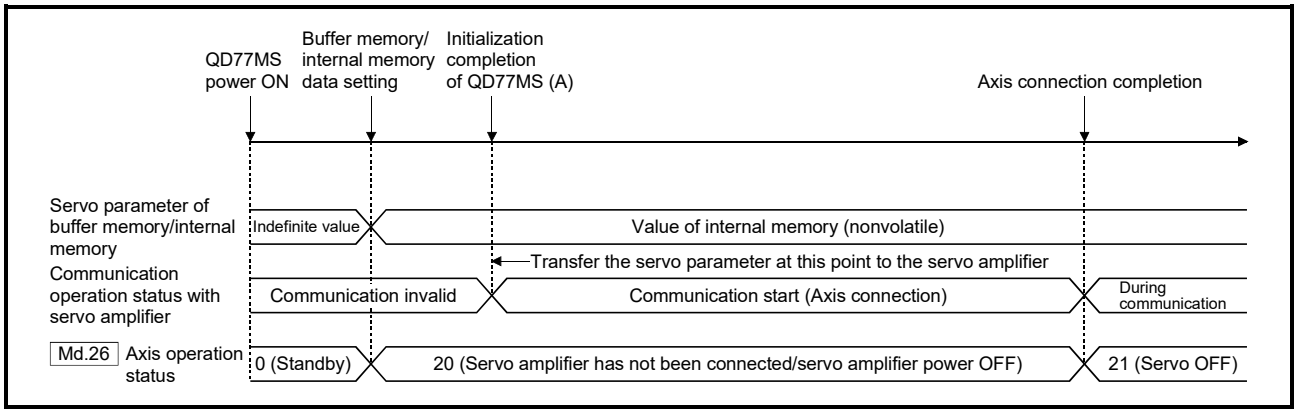

Fig. 7.1 When the servo amplifier had started before the system's power supply ON (The servo series of internal memory (nonvolatile) is set.)

(b) When the servo parameter "[Pr.100] Servo series" = "0" is stored in the internal memory (nonvolatile).

Communication start timing to the servo amplifier: The data written from sequence program before the PLC READY signal [Y0] ON (Fig. 7.2 (B)).

Transfer the servo parameter : The data written from sequence program/ GX Works2 before the PLC READY signal [Y0] ON (Fig. 7.2 (A)).

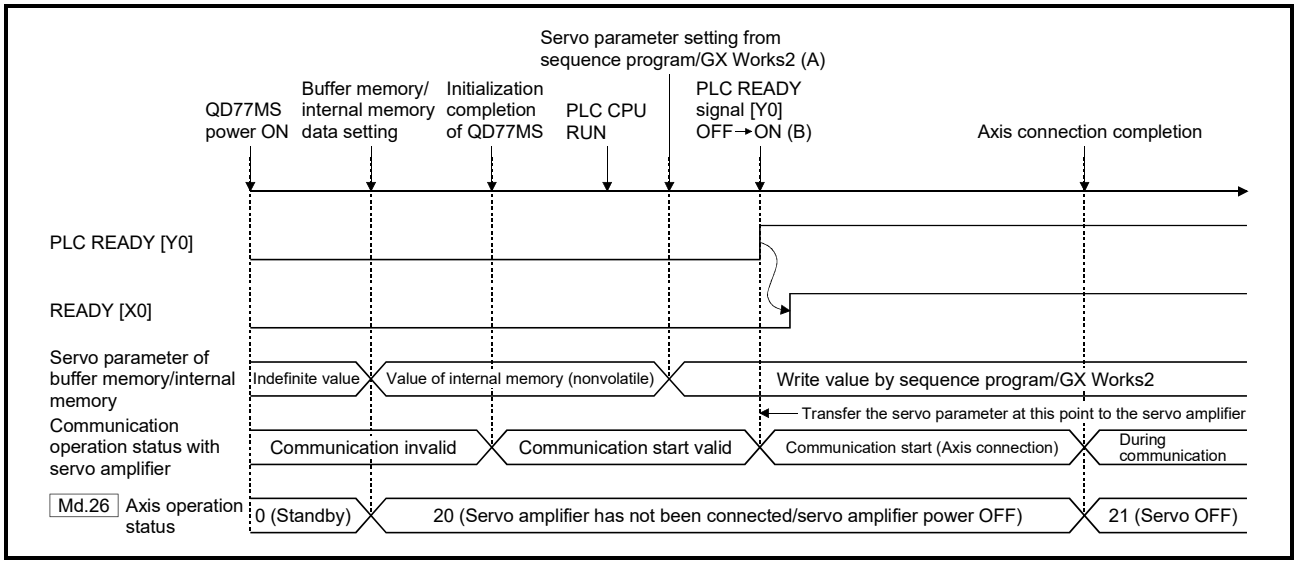

Fig. 7.2 When the servo amplifier had started before the system's power supply ON
(The servo series of internal memory (nonvolatile) is not set.)

(2) When the servo amplifier's power supply is turned ON after the PLC READY signal [Y0] is turned OFF to ON (Fig. 7.3 (C)).

Communication start timing to the servo amplifier: When the servo amplifier had started (Fig. 7.3 (B)).

Transfer the servo parameter : The data written from sequence program/ GX Works2 before the PLC READY signal [Y0] ON (Fig. 7.3 (A)).

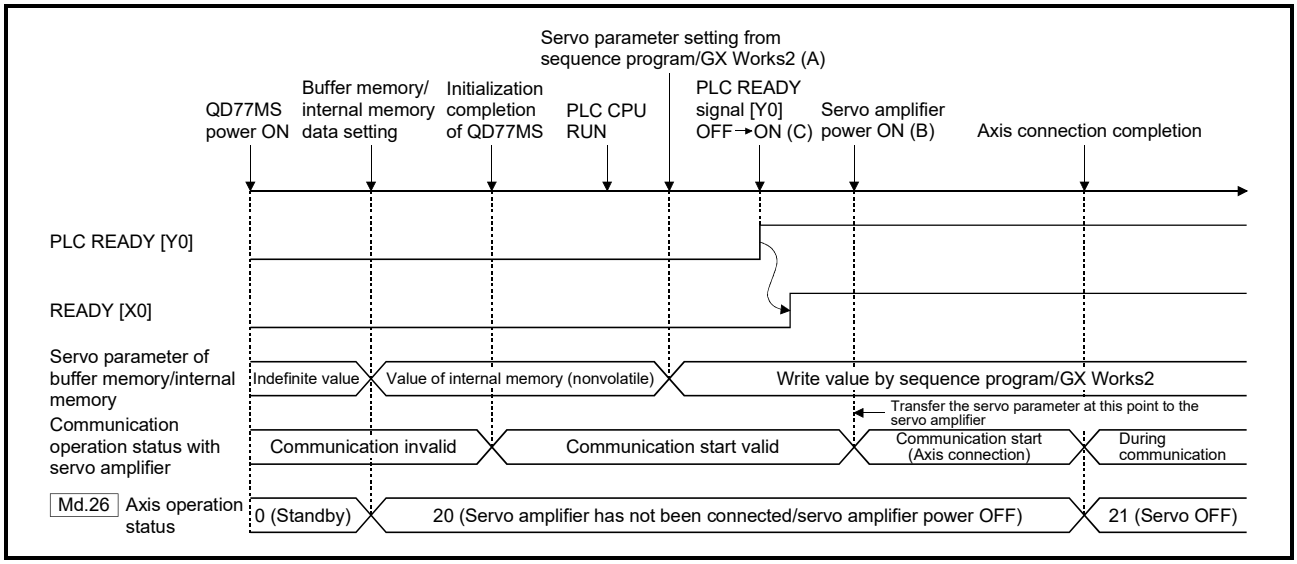

Fig. 7.3 When the servo amplifier had started after the PLC READY signal [Y0] is turned OFF to ON

■ How to change individually the servo parameter after transfer of servo parameter

The servo parameters can be individually changed from Simple Motion module with the following axis control data.

Setting item		Setting details	Buffer memory address	
			QD77MS2 QD77MS4	QD77MS16
[Cd.130]	Servo parameter read/write request	Set the write request of servo parameter. Set "0001H" or "0002H" after setting "[Cd.131] Parameter No." and "[Cd.132] Change data". 0001H: 1 word write request 0002H: 2 words write request	1554+100n	4354+100n
[Cd.131]	Parameter No.	Set the servo parameter to be changed.	1555+100n	4355+100n
[Cd.132]	Change data	Set the change value of servo parameter set in "[Cd.131] Parameter No.".	1556+100n 1557+100n	4356+100n 4357+100n

n: Axis No.-1

POINT

(1) Both of the servo parameter area (internal memory (nonvolatile) and buffer memory/internal memory) of Simple Motion module and the parameter of servo amplifier are changed.

(2) When the servo parameters that become valid by turning ON the servo amplifier's power supply are changed, be sure to turn ON (Note) twice the servo amplifier's power supply after change.

(Note): The servo amplifier's RAM data are changed by parameter setting, but the servo amplifier's EEPROM data are not changed. The EEPROM data before the change are overwritten to RAM by the servo amplifier's power supply ON again, and then the servo amplifier starts.
After that, the changed data are written to the servo amplifier's EEPROM in an initial communication with Simple Motion module.
Therefore, the changed data are overwritten to the RAM data by turning the servo amplifier's power supply ON again.

(3) If "0001H: 1 word write request" or "0002H: 2 words write request" is set in "[Cd.130] Servo parameter read/write request" in the following states, it becomes "0003H: Read/write failure".

- The connection with the servo amplifier is not established or there is an error in the communication.
- "[Cd.131] Parameter No." is outside the setting range.
  The servo amplifier does not support the writing of the specified number of words.

■ Transfer from the PLC CPU to the Simple Motion module

When MR-J5(W)-B is used, setting "0022H: 2 words write request to internal memory" or "0032H: 2 words read request from internal memory" in "[Cd.130] Servo parameter read/write request" of the axis control data reads/writes the servo parameters to "Servo parameter (When MR-J5(W)-B is used)" of the internal memory.

For details of how to read and write "Servo parameter (When MR-J5(W)-B is used)" from/to the internal memory using the axis control data, refer to "Appendix 6.6 Connection with MR-J5(W)-B".

MEMO

Section 2 Control Details and Setting

Section 2 is configured for the following purposes shown in (1) to (3).

(1) Understanding of the operation and restrictions of each control.
(2) Carrying out the required settings in each control
(3) Dealing with errors

The required settings in each control include parameter setting, positioning data setting, control data setting by a sequence program, etc.
Carry out these settings while referring to "Chapter 5 Data Used for Positioning Control". Also refer to "Chapter 6 Sequence Program Used for Positioning Control" when creating the sequence programs required in each control, and consider the entire control program configuration when creating each program.

Chapter 8 HPR Control ..... 8- 1 to 8- 20
Chapter 9 Major Positioning Control..... 9- 1 to 9-134
Chapter 10 High-Level Positioning Control ..... 10-1 to 10- 30
Chapter 11 Manual Control..... 11-1 to 11- 32
Chapter 12 Expansion Control..... 12-1 to 12- 34
Chapter 13 Control Sub Functions ..... 13-1 to 13-110
Chapter 14 Common Functions..... 14-1 to 14- 70
Chapter 15 Dedicated Instructions ..... 15-1 to 15- 18
Chapter 16 Troubleshooting ..... 16-1 to 16- 66

MEMO

Chapter 8 HPR Control

The details and usage of "HPR control" are explained in this chapter.

HPR control includes "machine HPR" that establish a machine HP without using address data, and "fast HPR" that store the coordinates established by the machine HPR, and carry out positioning to that position.
HPR carried out by sequence programs from the PLC CPU are explained in this chapter. Refer to the help in "Simple Motion Module Setting Tool" of GX Works2 for details on HPR using the GX Works2.

8.1 Outline of HPR control 8- 2
8.1.1 Two types of HPR control 8- 2
8.2 Machine HPR 8- 6
8.2.1 Outline of the machine HPR operation 8- 6
8.2.2 Machine HPR method 8- 7
8.2.3 HPR method (1): Proximity dog method 8- 8
8.2.4 HPR method (2): Count method 1) 8-10
8.2.5 HPR method (3): Count method 2) 8-12
8.2.6 HPR method (4): Data set method 8-14
8.2.7 HPR method (5): Scale origin signal detection method 8-15
8.3 Fast HPR 8-18
8.3.1 Outline of the fast HPR operation 8-18
8.4 Selection of the HPR setting condition 8-20
8.4.1 Outline of the HPR setting condition 8-20

8.1 Outline of HPR control

8.1.1 Two types of HPR control

In "HPR control", a position is established as the starting point (or "HP") when carrying out positioning control, and positioning is carried out toward that starting point.
It is used to return a machine system at any position other than the HP to the HP when the Simple Motion module issues an "HPR request" (Note-1) with the power turned ON or others, or after a positioning stop.

In the Simple Motion module, the following two control types are defined as "HPR control", following the flow of the HPR work.
These two types of HPR control can be executed by setting the "HPR parameters", setting "Positioning start No. 9001" and "positioning start No. 9002" prepared beforehand in the Simple Motion module to "[Cd.3] Positioning start No.", and turning ON the positioning start signal.
The ZP.PSTRT_ start numbers of the dedicated instruction can also be set to 9001 or 9002 to execute the HPR control. (For details, refer to Chapter 15 "Dedicated Instructions".)

(1) Establish a positioning control HP
  – "Machine HPR" (positioning start No. 9001)
(2) Carry out positioning toward the HP
  – "Fast HPR" (positioning start No. 9002).

The "machine HPR" above must be carried out in advance to execute the "fast HPR".

⚠CAUTION

- When using the absolute position system function, on starting up, and when the controller or absolute position motor has been replaced, always perform an HPR.
  In the case of the absolute position system, use the sequence program to check the HPR request before performing the positioning control.
  Failure to observe this could lead to an accident such as a collision.

REMARK

HPR request (Note-1)

The "HPR request flag" ([Md.31] Status: b3) must be turned ON in the Simple Motion module, and a machine HPR must be executed in the following cases.

(1) When not using an absolute position system

(a) This flag turns on in the following cases:

- System's power supply on or reset
- Servo amplifier power supply on
- Machine HPR start
  (Unless a machine HPR is completed normally, the HPR request flag does not turn off.)

(b) This flag turns off by the completion of machine HPR.

(2) When using an absolute position system

(a) This flag turns on in the following cases:

- When not executing a machine HPR even once after the system starts
- Machine HPR start
  (Unless a machine HPR is completed normally, the HPR request flag does not turn off.)
- When an absolute position data in the Simple Motion module is erased due to a memory error, etc. (occurrence of the error "HPR data incorrect" (error code: 1201))
- The servo alarm "Absolute position erased" (alarm No.: 25) occurs.
  ([Md.108] Servo status (high-order buffer memory address) b14 ON)
- The servo warning "Absolute position counter warning" (warning No.: E3) occurs.
  ([Md.108] Servo status (high-order buffer memory address) b14 ON)

	Buffer memory address (high-order)	
	QD77MS2/QD77MS4	QD77MS16
[Md.108] Servo status: b14	877+100n	2477+100n

n: Axis No.-1

- When the "Rotation direction selection/travel direction selection (PA14)" of servo parameter is changed.

(b) This flag turns off by the completion of the machine HPR.

The address information stored in the Simple Motion module cannot be guaranteed while the "HPR request flag" is ON.
The "HPR request flag" turns OFF and the "HPR complete flag" ([Md.31] Status: b4) turns ON if the machine HPR is executed and is completed normally.

■ Wiring the proximity dog

When using the proximity dog signal, wire the signal terminals corresponding to the proximity dog of the device to be used as follows.

(1) External input signal of QD77MS

Wire the upper/lower limit stroke limit terminals of the Simple Motion module/servo amplifier as shown in the following drawing. As for the 24 V DC polarity, both "+" and "-" are possible.

(Example)

• When "[Pr.22] Input signal logic selection" is set to the initial value

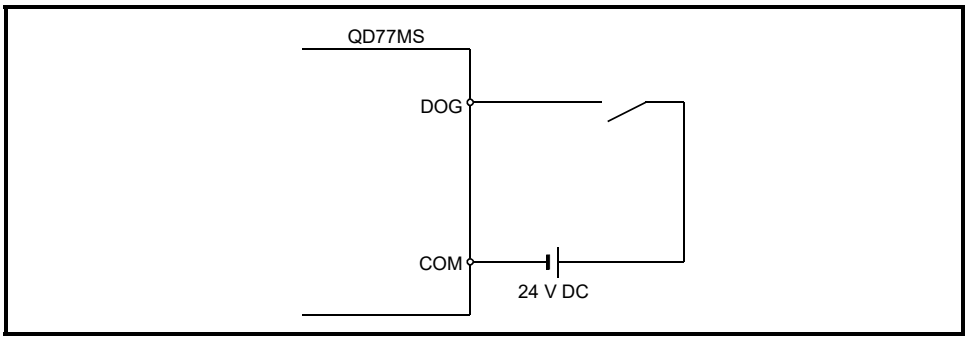

Fig. 8.1 Wiring when using the proximity dog

(2) External input signal of the servo amplifier

Refer to the servo amplifier instruction manual or manual for details on signal input availability and wiring.

Wire the MR-J3/MR-J4 series servo amplifier and MR-J5(W)-B as shown in the following drawing. As for the 24 V DC polarity, both "+" and "-" are possible.

(Example)

• When "[Pr.22] Input signal logic selection" is set to the initial value

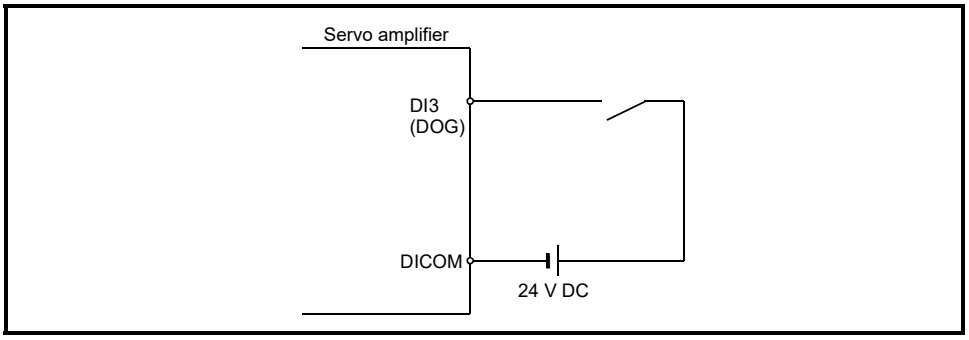

Fig. 8.2 Wiring when using the proximity dog

(3) External input signal via CPU (buffer memory of QD77MS)

Refer to the manual of the input module to be used for wiring.

■ HPR sub functions

Refer to Section 3.2.5 "Combination of QD77MS main functions and sub functions" for details on "sub functions" that can be combined with HPR control. Also refer to Chapter 13 "Control Sub Functions" for details on each sub function.

[Remarks]

The following two sub functions are only related to machine HPR.

Sub function name	Machine HPR	Fast HPR	Reference
HPR retry function	△	×	Section 13.2.1
HP shift function	○	×	Section 13.2.2

○ : Combination possible, △: Restricted, ×: Combination not possible

■ When an HPR is not required

Control can be carried out ignoring the "HPR request flag" ([Md.31] Status: b3) in systems that do not require an HPR.
In this case, the "HPR parameters ([Pr.43] to [Pr.57])" must all be set to their initial values or a value at which an error does not occur.

■ HPR from GX Works2

"Machine HPR" and "fast HPR" can be executed from the test function of the GX Works2.
Refer to the help in "Simple Motion Module Setting Tool" of GX Works2 for details on HPR from the GX Works2.

8.2 Machine HPR

8.2.1 Outline of the machine HPR operation

■ Machine HPR operation

In a machine HPR, HP is established.
None of the address information stored in the Simple Motion module, PLC CPU, or servo amplifier is used at this time. The position mechanically established after the machine HPR is regarded as the "HP" to be the starting point for positioning control.

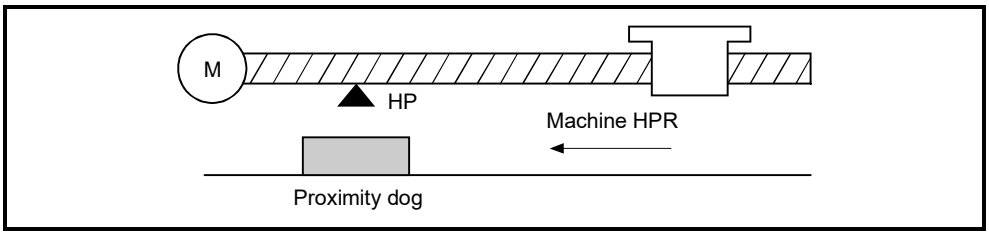

Fig. 8.3 Example of a machine HPR

The method for establishing an "HP" by a machine HPR differs according to the method set in "[Pr.43] HPR method".
The following shows the operation when starting a machine HPR.

When "[Pr.43] HPR method" is set to other than "Driver HPR method"

1)	The "machine HPR" is started.
2)	The operation starts according to the speed and direction set in the HPR parameters ([Pr.43] to [Pr.57]).
3)	The "HP" is established by the method set in "[Pr.43] HPR method", and the machine stops. (Refer to Sections 8.2.2 to 8.2.7)
4)	If "a" is set as "[Pr.45] HP address", "a" will be stored as the current position in the "[Md.20] Command position value" and "[Md.21] Feed machine value" which are monitoring the position.
5)	The machine HPR is completed.

POINT

Use the HPR retry function when the HP is not always in the same direction from the workpiece operation area (when the HP is not set near the upper or lower limit of the machine).
The machine HPR may not complete unless the HPR retry function is used.

8.2.2 Machine HPR method

The method by which the machine HP is established (method for judging the HP and machine HPR completion) is designated in the machine HPR according to the configuration and application of the positioning method.
The following table shows the methods that can be used for this HPR method.
(The HPR method is one of the items set in the HPR parameters. It is set in "[Pr.43] HPR method" of the basic parameters for HPR.)

[Pr.43] HPR method	Operation details
Proximity dog method	Deceleration starts by the OFF → ON of the proximity dog. (Speed is reduced to "[Pr.47] Creep speed".) The operation stops once after the proximity dog turns ON and then OFF. Later the operation restarts and then stops at the first zero signal to complete the HPR.
Count method 1)	The deceleration starts by the OFF → ON of the proximity dog, and the machine moves at the "[Pr.47] Creep speed". The machine stops once after moving the distance set in the "[Pr.50] Setting for the movement amount after proximity dog ON" from the OFF → ON position. Later the operation restarts and then stops at the first zero point to complete the machine HPR.
Count method 2)	The deceleration starts by the OFF → ON of the proximity dog, and the machine moves at the "[Pr.47] Creep speed. The machine moves the distance set in the "[Pr.50] Setting for the movement amount after proximity dog ON" from the proximity dog OFF → ON position, and stops at that position. The machine HPR is then regarded as completed.
Data set method	The position where the machine HPR has been performed becomes an HP. The command position value and feed machine value are overwritten to the HP address.
Scale origin signal detection method	The machine moves in the opposite direction against of "[Pr.44] HPR direction" at the "[Pr.46] HPR speed" by the OFF → ON of the proximity dog, and a deceleration stop is carried out once at the first zero signal. Later the operation moves in direction of "[Pr.44] HPR direction" at the "[Pr.47] Creep speed", and then stops at the detected nearest zero point to complete the machine HPR.
Driver HPR method	Refer to Appendix 6.3 "AlphaStep/5-phase stepping motor driver manufactured by ORIENTAL MOTOR Co., Ltd." or Appendix 6.4 "IAI electric actuator controller manufactured by IAI Corporation" for details on the driver HPR method.

REMARK

Creep speed
The stopping accuracy is poor when the machine rapidly stops from fast speeds. To improve the machine's stopping accuracy, it is required to slow down the speed before it stops. This speed is set in the "[Pr.47] Creep speed".

The following shows the signals as required for machine HPR.

[Pr.43] HPR method	Signals required for control		
	Proximity dog	Zero signal	Upper/lower limit
Proximity dog method	◎	◎	○
Count method 1)	◎	◎	○
Count method 2)	◎	—	○
Data set method	—	—	—
Scale origin signal detection method	◎	◎	—
Driver HPR method	○*1	○*1	○*1

◎: Necessary, ○: Necessary as required, —: Unnecessary

*1: Confirm to the HPR specification of the servo amplifier for the signals required for control.

8.2.3 HPR method (1): Proximity dog method

The following shows an operation outline of the HPR method "proximity dog method".

■ Operation chart

1)	The machine HPR is started. (The machine begins the acceleration designated in "[Pr.51] HPR acceleration time selection", in the direction designated in "[Pr.44] HPR direction". It then moves at the "[Pr.46] HPR speed" when the acceleration is completed.)
2)	The machine begins decelerating when the proximity dog ON is detected.
3)	The machine decelerates to the "[Pr.47] Creep speed", and subsequently moves at that speed. (At this time, the proximity dog must be ON. The workpiece will continue decelerating and stop if the proximity dog is OFF.)
4)	After the proximity dog turns OFF, the machine stops. It then restarts and stops at the first zero point.
5)	The HPR complete flag ([Md.31] Status: b4) turns from OFF to ON and the HPR request flag ([Md.31] Status: b3) turns from ON to OFF.

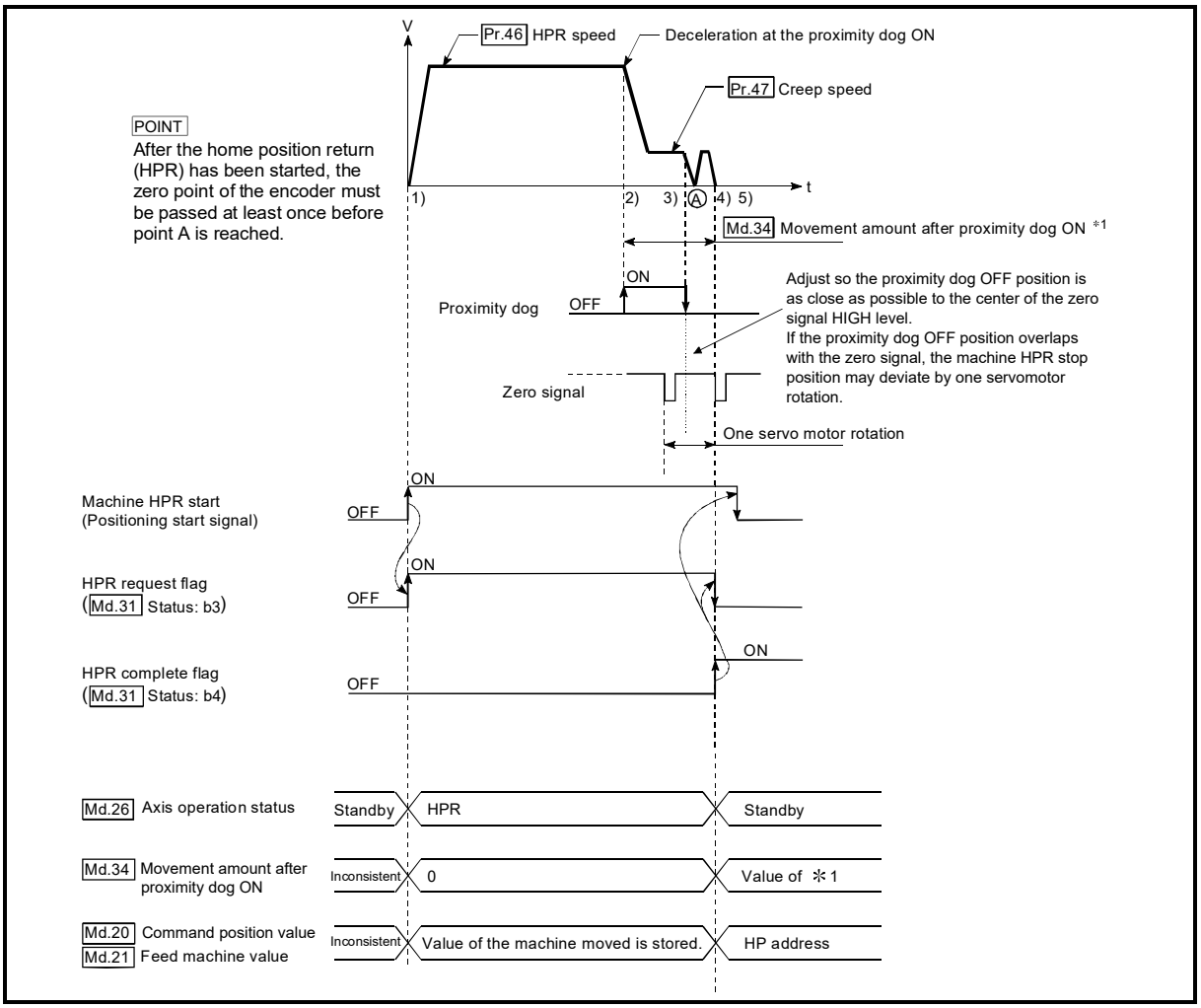

Fig. 8.4 Proximity dog method machine HPR

■ Precautions during operation

(1) The error "Start at HP" (error code: 201) will occur if another machine HPR is attempted after a machine HPR completion when the HPR retry function is not set ("0" is set in "[Pr.48] HPR retry").

(2) Machine HPR carried out from the proximity dog ON position will start at the "[Pr.47] Creep speed".

(3) The proximity dog must be ON during deceleration from the HPR speed "[Pr.47] Creep speed".

(4) When the stop signal stops the machine HPR, carry out the machine HPR again. When restart command is turned ON after the stop signal stops the HPR, the error "HPR restart not possible" (error code: 209) will occur.

(5) After the home position return (HPR) has been started, the zero point of the encoder must be passed at least once before point A is reached.
However, if selecting "1: Not need to pass servo motor Z-phase after power on" with "Function selection C-4 (PC17)", it is possible to carry out the home position return (HPR) without passing the zero point.
The workpiece will continue decelerating and stop if the proximity dog is turned OFF before it has decelerated to the creep speed, thus causing the error "Dog detection timing fault" (error code: 203).

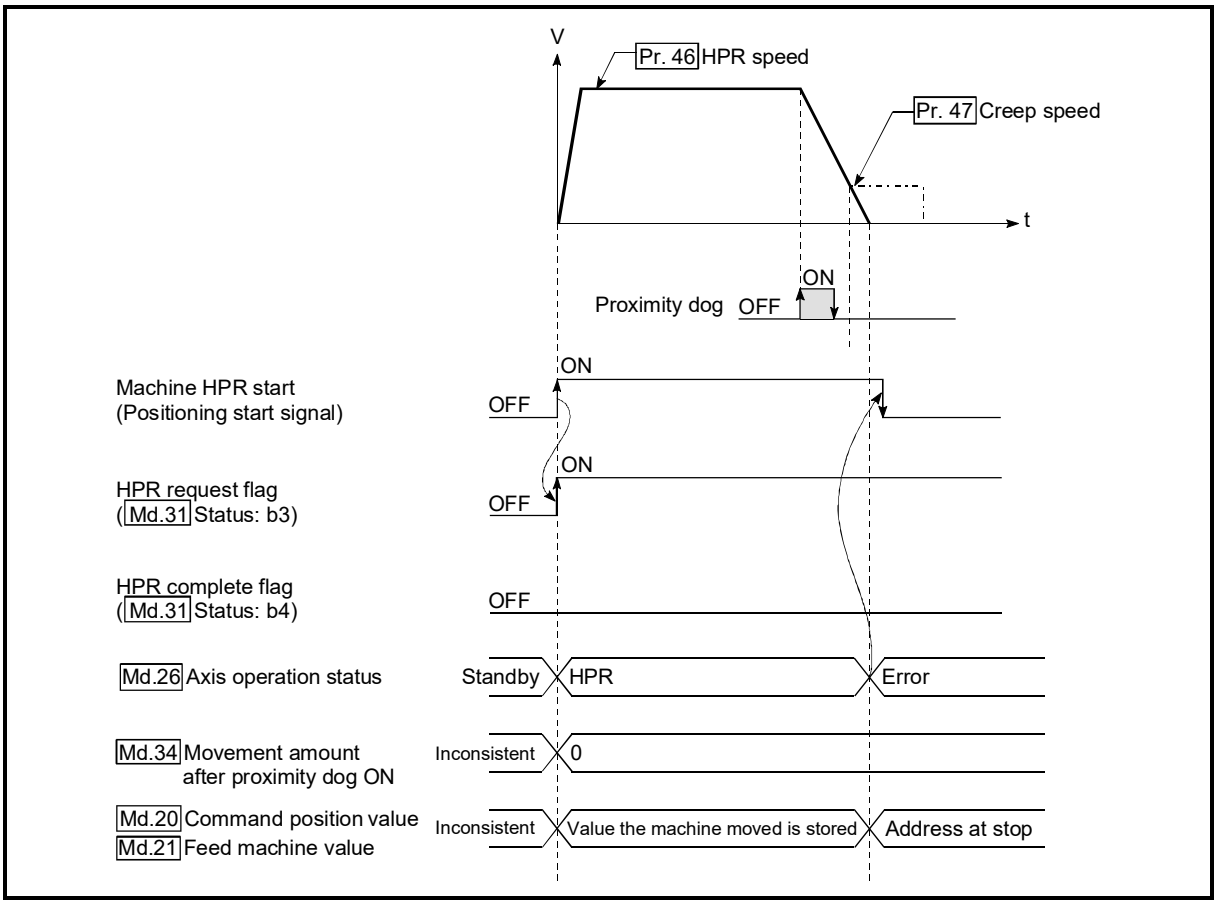

Fig. 8.5 Operation when the proximity dog is turned OFF before the creep speed is reached

8.2.4 HPR method (2): Count method 1)

The following shows an operation outline of the HPR method "count method 1)".
In the HPR with the "count method 1)", the following operations can be performed:

- The machine HPR on the proximity dog
- The machine HPR again after the machine HPR is completed

■ Operation chart

1)	The machine HPR is started. (The machine begins the acceleration designated in "[Pr.51] HPR acceleration time selection", in the direction designated in "[Pr.44] HPR direction". It then moves at the "[Pr.46] HPR speed" when the acceleration is completed.)
2)	The machine begins decelerating when the proximity dog ON is detected.
3)	The machine decelerates to the "[Pr.47] Creep speed", and subsequently moves at that speed.
4)	The machine stops after the workpiece has been moved the amount set in the "[Pr.50] Setting for the movement amount after proximity dog ON" after the proximity dog turned ON. It then restarts and stops at the first zero point.
5)	The HPR complete flag ([Md.31] Status: b4) turns from OFF to ON, and the HPR request flag ([Md.31] Status: b3) turns from ON to OFF.

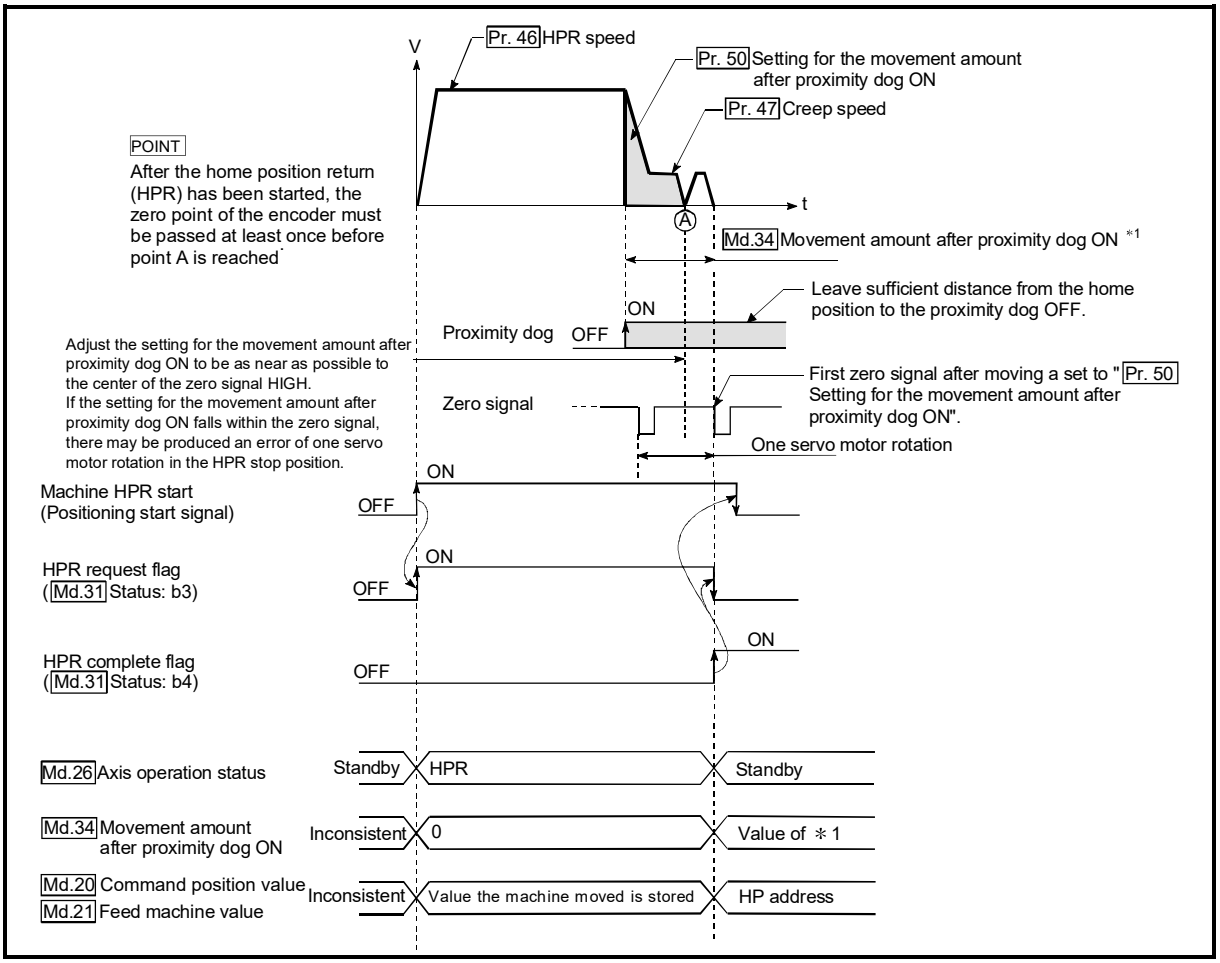

Fig. 8.6 Count method 1) machine HPR

■ Precautions during operation

(1) The error "Count method movement amount fault "(error code: 206) will occur if the "[Pr.50] Setting for the movement amount after proximity dog ON" is smaller than the deceleration distance from the "[Pr.46] HPR speed" to "[Pr.47] Creep speed".

(2) If the speed is changed to a speed faster than "[Pr.46] HPR speed" by the speed change function (refer to "13.5.1 Speed change function".) during a machine HPR, the distance to decelerate to "[Pr.47] Creep speed" may not be ensured, depending on the setting value of "[Pr.50] Setting for the movement amount after proximity dog ON". In this case, the error "Count method movement amount fault" (error code: 206) occurs and the machine HPR is stopped.

(3) The following shows the operation when a machine HPR is started while the proximity dog is ON.

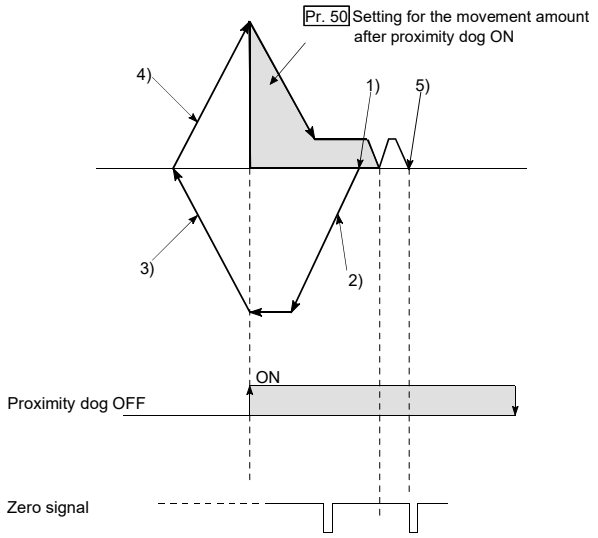

[Operation when a machine HPR is started at the proximity dog ON position]

1) A machine HPR is started.
2) The machine moves at the HPR speed in the opposite direction of an HPR.
3) Deceleration processing is carried out when the proximity dog OFF is detected.
4) After the machine stops, a machine HPR is carried out in the HPR direction.
5) The machine HPR is completed on detection of the first zero signal after the travel of the movement amount set to "[Pr.50] Setting for the movement amount after proximity dog ON" on detection of the proximity dog signal ON.

Fig. 8.7 Count method 1) machine HPR on the proximity dog ON position

(4) Turn OFF the proximity dog at a sufficient distance from the HP.
Although there is no harm in operation if the proximity dog is turned OFF during a machine HPR, it is recommended to leave a sufficient distance from the HP when the proximity dog is turned OFF for the following reason.
If machine HPRs are performed consecutively after the proximity dog is turned OFF at the time of machine HPR completion, operation will be performed at the HPR speed until the hardware stroke limit (upper/lower limit) is reached.
If a sufficient distance cannot be kept, consider the use of the HPR retry function.

(5) When the stop signal stops the machine HPR, carry out the machine HPR again. When restart command is turned ON after the stop signal stops the HPR, the error "HPR restart not possible" (error code: 209) will occur.

(6) After the home position return (HPR) has been started, the zero point of the encoder must be passed at least once before point A is reached.
However, if selecting "1: Not need to pass servo motor Z-phase after power on" with "Function selection C-4 (PC17)", it is possible to carry out the home position return (HPR) without passing the zero point.

8.2.5 HPR method (3): Count method 2)

The following shows an operation outline of the HPR method "count method 2)".
The "count method 2)" method is effective when a "zero signal" cannot be received.
(Note that compared to the "count method 1)" method, using this method will result in more deviation in the stop position during machine HPR.)

■ Operation chart

1)	The machine HPR is started. (The machine begins the acceleration designated in "[Pr.51] HPR acceleration time selection", in the direction designated in "[Pr.44] HPR direction". It then moves at the "[Pr.46] HPR speed" when the acceleration is completed.)
2)	The machine begins decelerating when the proximity dog ON is detected.
3)	The machine decelerates to the "[Pr.47] Creep speed", and subsequently moves at that speed.
4)	The command from the Simple Motion module will stop and the machine HPR will be completed when the machine moves the movement amount set in "[Pr.50] Setting for the movement amount after proximity dog ON" from the proximity dog ON position.

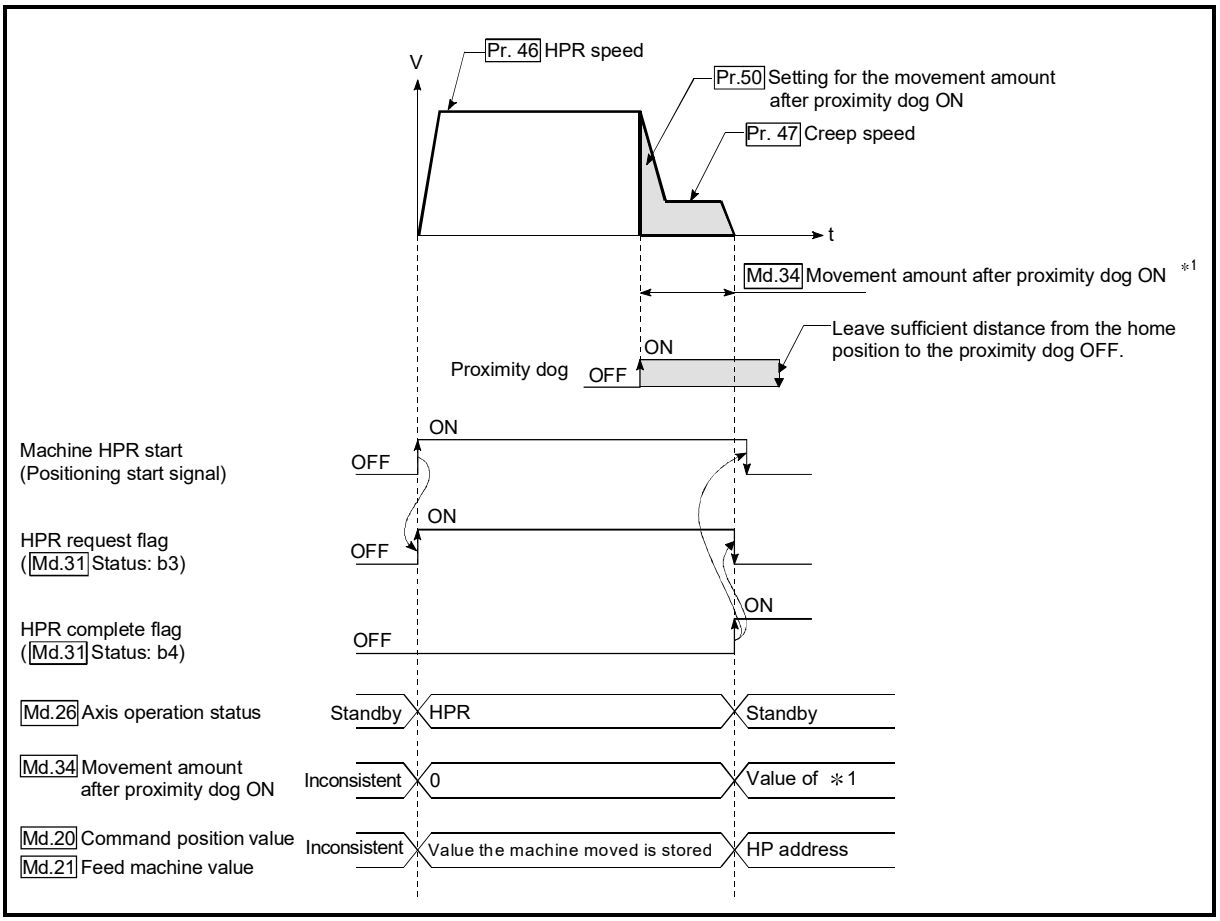

Fig. 8.8 Count method 2) machine HPR

■ Restrictions

When this method is used, a deviation will occur in the stop position (HP) compared to other HPR methods because an error of about 1 ms occurs in taking in the proximity dog ON.

■ Precautions during operation

(1) The error "Count method movement amount fault" (error code: 206) will occur and the operation will not start if the "[Pr.50] Setting for the movement amount after proximity dog ON" is smaller than the deceleration distance from the "[Pr.46] HPR speed" to "[Pr.47] Creep speed".

(2) If the speed is changed to a speed faster than "[Pr.46] HPR speed" by the speed change function (refer to "13.5.1 Speed change function".) during a machine HPR, the distance to decelerate to "[Pr.47] Creep speed" may not be ensured, depending on the setting value of "[Pr.50] Setting for the movement amount after proximity dog ON". In this case, the error "Count method movement amount fault" (error code: 206) occurs and the machine HPR is stopped.

(3) The following shows the operation when a machine HPR is started while the proximity dog is ON.

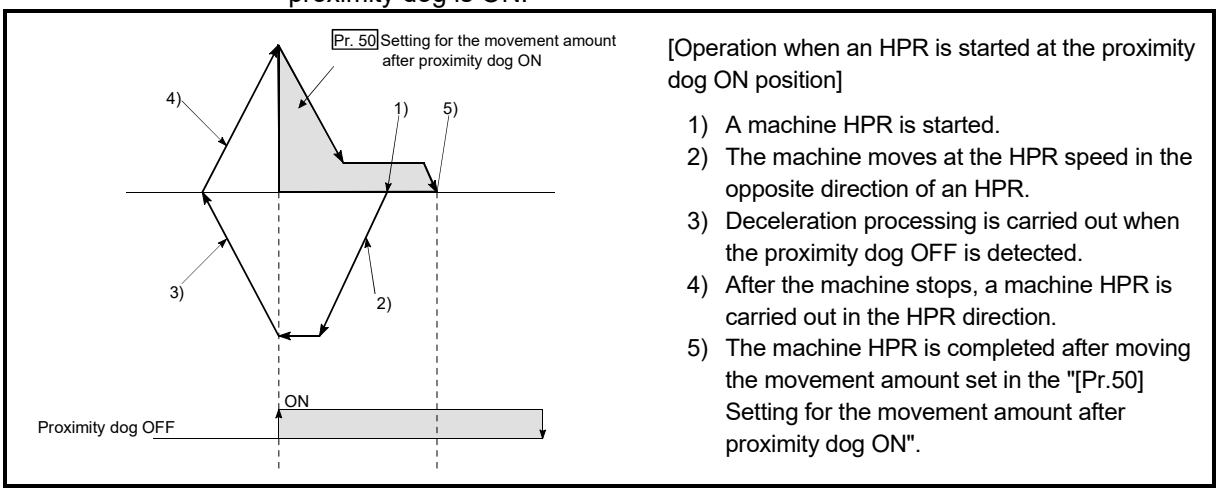

Fig. 8.9 Count method 2) machine HPR on the proximity dog ON position

(4) Turn OFF the proximity dog at a sufficient distance from the HP.
Although there is no harm in operation if the proximity dog is turned OFF during a machine HPR, it is recommended to leave a sufficient distance from the HP when the proximity dog is turned OFF for the following reason.
If machine HPRs are performed consecutively after the proximity dog is turned OFF at the time of machine HPR completion, operation will be performed at the HPR speed until the hardware stroke limit (upper/lower limit) is reached.
If a sufficient distance cannot be kept, consider the use of the HPR retry function.

(5) When the stop signal stops the machine HPR, carry out the machine HPR again. When restart command is turned ON after the stop signal stops the HPR, the error "HPR restart not possible" (error code: 209) will occur.

8.2.6 HPR method (4): Data set method

The following shows an operation outline of the HPR method "data set method".
The "Data set method" is effective when a "Proximity dog" is not used.
With the data set method HPR, the position where the machine HPR has been carried out, is registered into the Simple Motion module as the HP, and the command position value and feed machine value is overwritten to an HP address.
Use the JOG or manual pulse generator operation to move the HP.

■ Operation chart

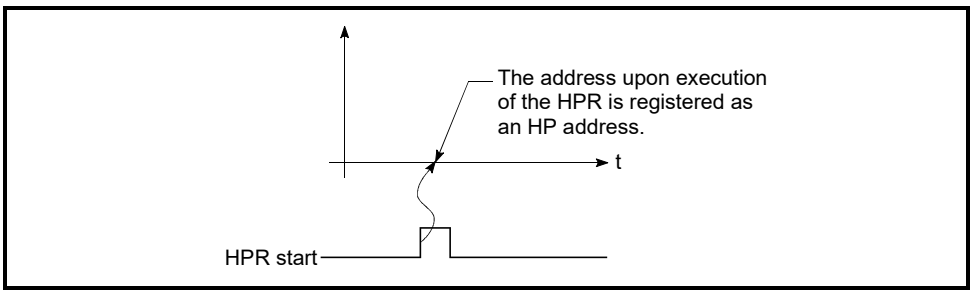

Fig. 8.10 Data set method HPR

■ Precautions during operation

(1) The zero point must have been passed before the HPR is carried out after the power supply is turned ON. If the HPR is carried out without passing the zero point even once, the error "HPR zero point not passed" (error code: 210) will occur. When the error "HPR zero point not passed" (error code: 210) occurs, perform the JOG or similar operation so that the servomotor makes more than one revolution after an error reset, before carrying out the machine HPR again. However, if selecting "1: Not need to pass servo motor Z-phase after power on" with "Function selection C-4 (PC17)", it is possible to carry out the home position return (HPR) without passing the zero point.

(2) The HPR data used for the data set method is the "HPR direction" and "HP address".
The HPR data other than that for the HPR direction and HP address is not used for the data set method HPR method, but if a value is set the outside the setting range, an error will occur when the PLC READY signal [Y0] is turned ON so that the READY signal [X0] is not turned ON.
With the HPR data other than that for the HPR direction and HP address, set an arbitrary value (default value can be allowed) within each data setting range so that an error will not occur upon receiving the PLC READY signal [Y0] ON.

(3) When using the backlash compensation function, set the same movement direction of the JOG or manual pulse generator operation to the HP before the HPR is executed as "HPR direction".

8.2.7 HPR method (5): Scale origin signal detection method

The following shows an operation outline of the HPR method "scale origin signal detection method".

POINT
Set "0: Need to pass servo motor Z-phase after power on" in "Function selection C-4 (PC17)". If "1: Not need to pass servo motor Z-phase after power on" is set, the error "Z-phase passing parameter invalid" (error code: 231) will occur at the start of scale origin signal detection method HPR.

■ Operation chart

1)	The machine HPR is started. (The machine begins the acceleration designated in "[Pr.51] HPR acceleration time selection", in the direction designated in "[Pr.44] HPR direction". It then moves at the "[Pr.46] HPR speed" when the acceleration is completed.)
2)	The machine begins decelerating when the proximity dog ON is detected.
3)	After deceleration stop, the machine moves in the opposite direction against of HPR at the "[Pr.46] HPR speed".
4)	During movement, the machine begins decelerating when the first zero signal is detected.
5)	After deceleration stop, the operation moves in direction of HPR at the "[Pr.47] Creep speed", and then stops at the detected nearest zero signal.
6)	The HPR complete flag ([Md.31] Status: b4) turns from OFF to ON, and the HPR request flag ([Md.31] Status: b3) turns from ON to OFF.

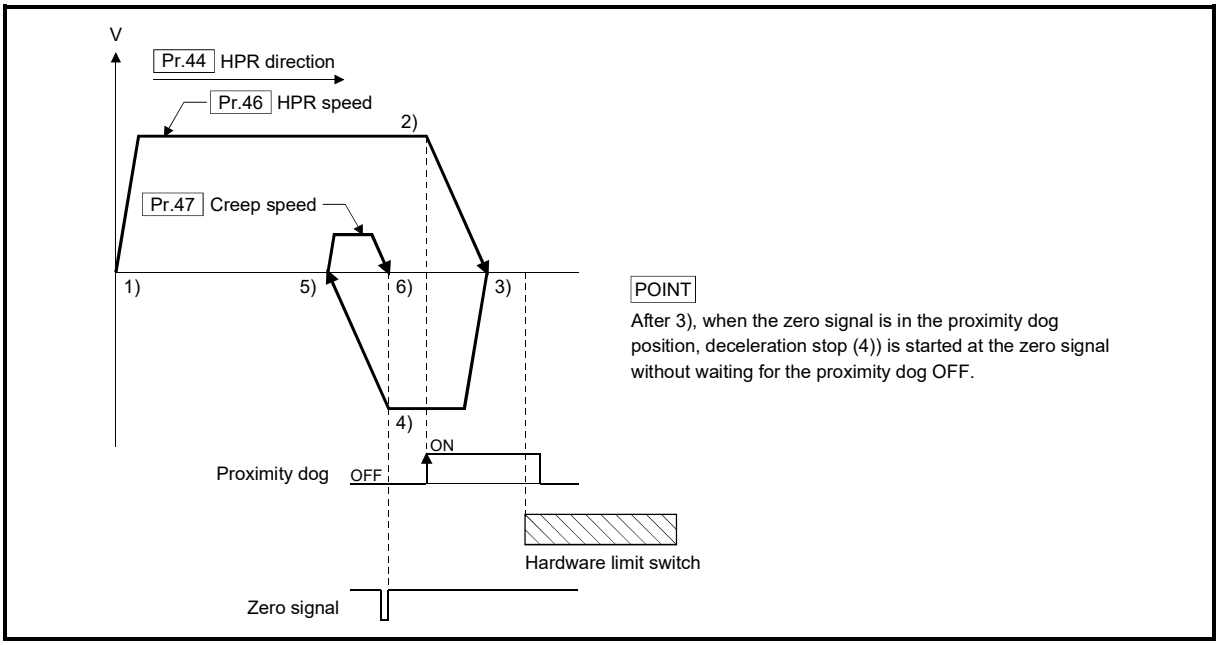

Fig. 8.11 Scale origin signal detection method machine HPR

■ Precautions during operation

(1) The error "Start at HP" (error code: 201) will occur if another machine HPR is attempted immediately after a machine HPR completion when the HP is in the proximity dog ON position.

(2) The following shows the operation when a machine HPR is started from the proximity dog ON position.

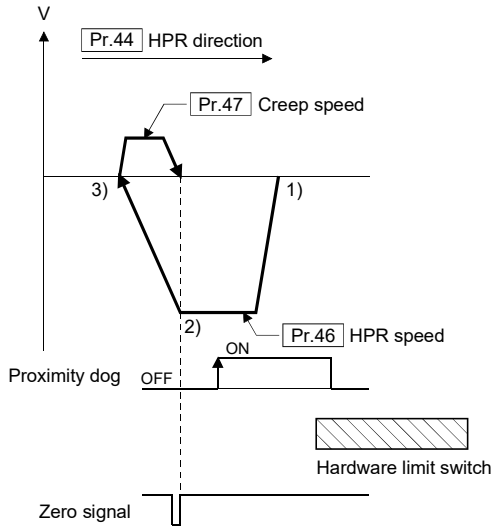

[Operation when a machine HPR is started from the proximity dog ON position]

1) The machine moves in the opposite direction against of HPR at the HPR speed.
2) The machine begins decelerating when the first zero signal is detected.
3) After deceleration stop, the operation moves in direction of HPR at the creep speed, and then stops at the zero signal to complete the machine HPR.

[POINT]

After 1), when the zero signal is in the proximity dog ON position, deceleration stop (2)) is started at the zero signal without waiting for the proximity dog OFF.

Fig. 8.12 Operation when a machine HPR is started from the proximity dog ON position

(3) When the stop signal stops the machine HPR, carry out the machine HPR again. When restart command is turned ON after the stop signal stops the HPR, the error "HPR restart not possible" (error code: 209) will occur.

(4) The HPR retry will not be performed regardless of setting set in "[Pr.48] HPR retry" in the scale origin signal detection method. When a hardware limit switch is detected during machine HPR, the error "Hardware stroke limit (+)" (error code: 104) or "Hardware stroke limit (-)" (error code: 105) will occur.

(5) Position the proximity dog forward to overlaps with the hardware limit switch in direction of HPR. When the proximity dog is in the opposite direction against of HPR from the machine HPR start position, the error "Hardware stroke limit (+)" (error code: 104) or "Hardware stroke limit (-)" (error code: 105) will occur.

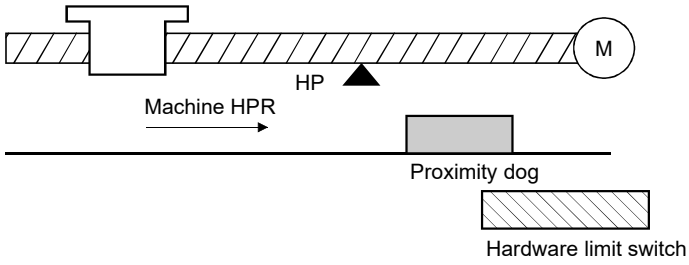

(6) When the zero signal is detected again during deceleration (4) of Fig. 8.13) with detection of zero signal, the operation stops at the zero signal detected lastly to complete the HPR.

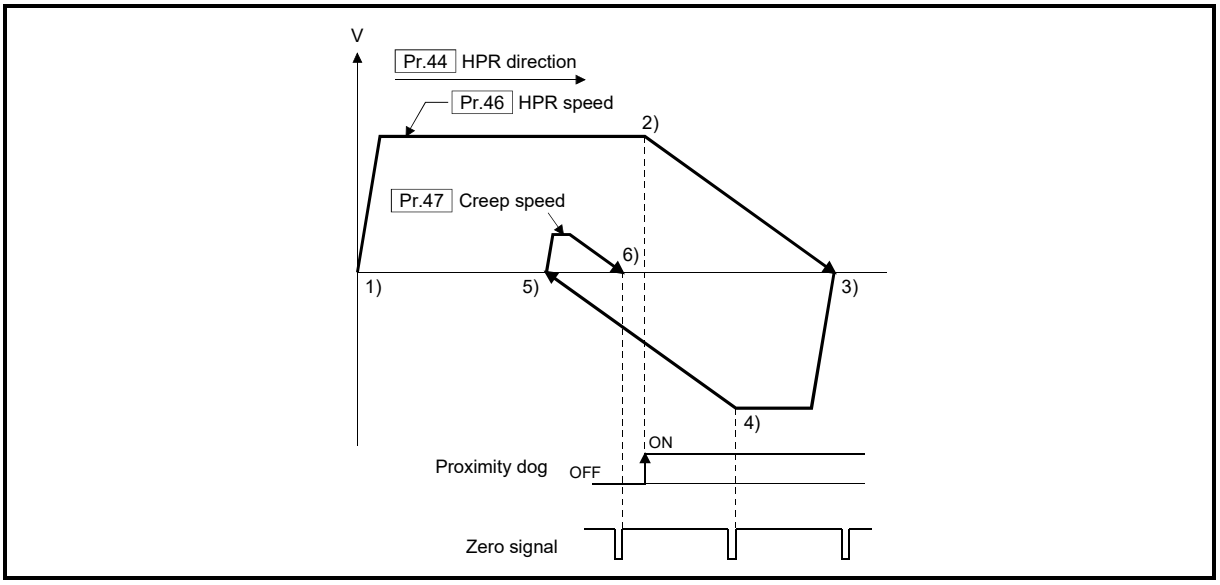

Fig. 8.13 Operation when the zero signal is detected again during deceleration with detection of zero signal

(7) Do not use the scale origin signal detection method HPR for the machine with the backlash.

(8) When using the direct drive motor, make it passed the Z-phase once before reaching 3) of Fig. 8.11.

8.3 Fast HPR

8.3.1 Outline of the fast HPR operation

■ Fast HPR operation

After establishing HP by a machine HPR, positioning control to the HP is executed without using a proximity dog or a zero signal.
The following shows the operation during a basic fast HPR start.

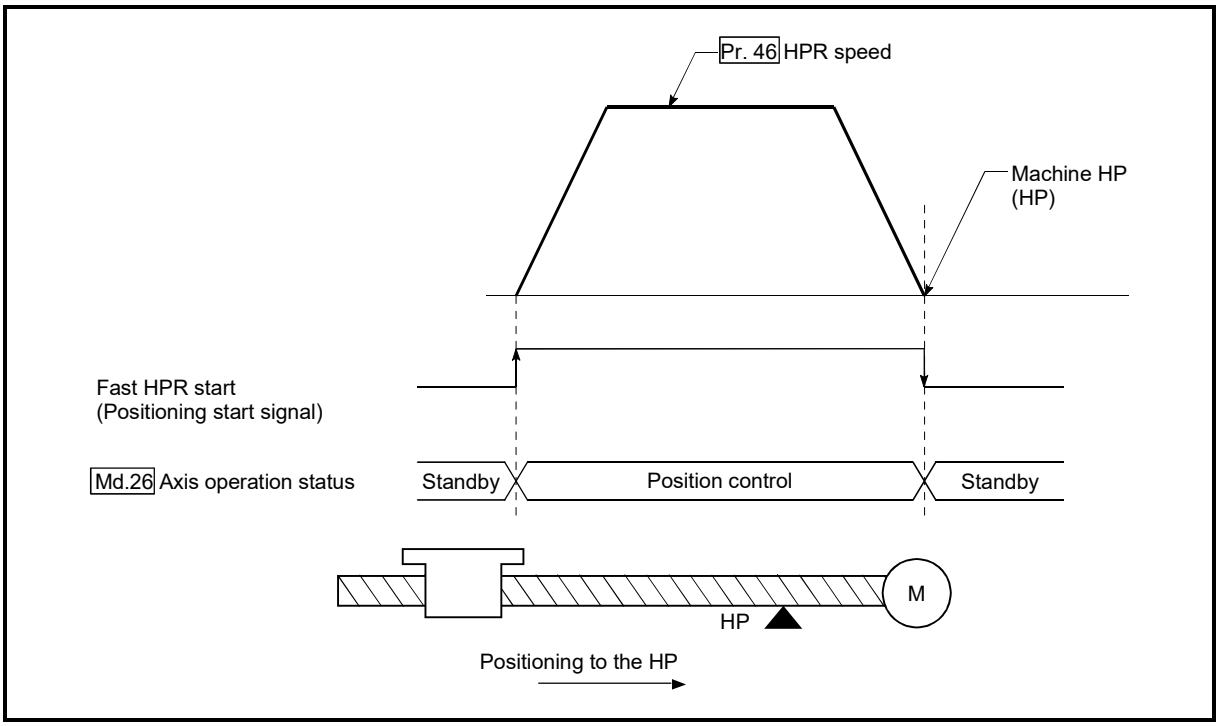

Fig. 8.14 Fast HPR

1) The fast HPR is started.
2) Positioning control to the HP established by a machine HPR begins at speed set in "[Pr.46] HPR speed".
3) The fast HPR is completed.

■ Operation timing and processing time of fast HPR

The following shows details about the operation timing and time during fast HPR.

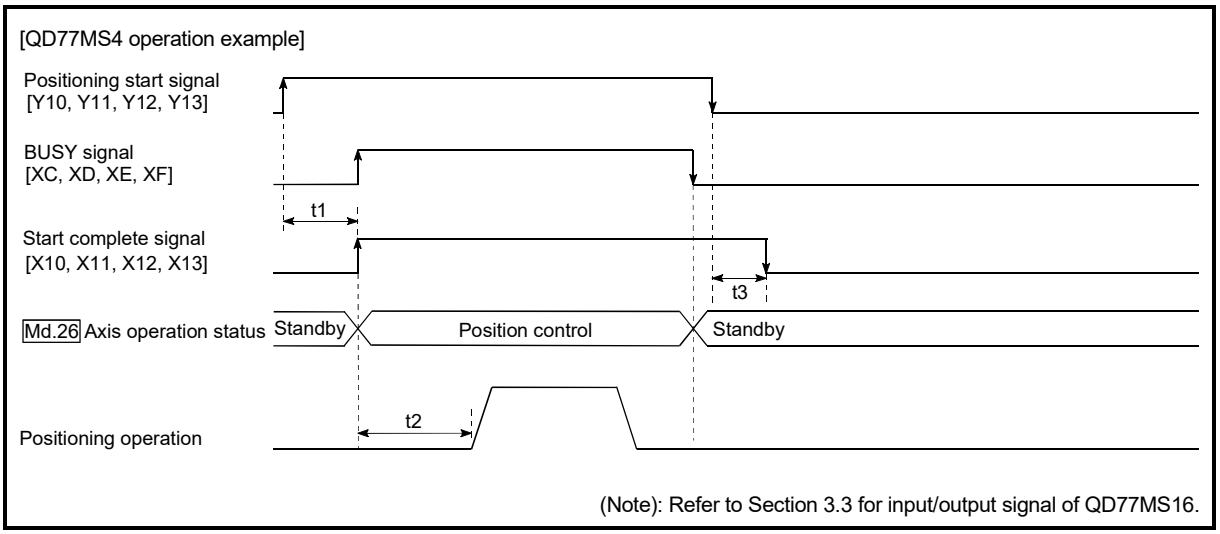

Fig. 8.15 Operation timing and processing time of fast HPR

Normal timing time Unit: [ms]

	Operation cycle	t1	t2	t3
QD77MS2	0.88	0.2 to 0.3	1.8 to 2.7	0 to 0.9
	1.77	0.2 to 0.3	2.5 to 3.9	0 to 1.8
QD77MS4	0.88	0.2 to 0.3	1.8 to 2.7	0 to 0.9
	1.77	0.2 to 0.3	2.5 to 3.9	0 to 1.8
QD77MS16	0.88	0.3 to 1.4	1.8 to 2.7	0 to 0.9
	1.77	0.3 to 1.4	3.2 to 3.9	0 to 1.8

- The t1 timing time could be delayed by the operation state of other axes.

■ Operating restrictions

(1) The fast HPR can only be executed after the HP is established by executing the Machine HPR.
If not, the error "HPR request ON" (error code: 207) will occur.
(HPR request flag ([Md.31] Status: b3) must be turned OFF).

(2) If the fraction pulse is cleared to zero using current value changing or fixed-feed control, execute the fast HPR and an error will occur by a cleared amount.

(3) When unlimited length feed is executed by speed control and the feed machine value overflows or underflows once, the fast HPR cannot be executed normally.

(4) The HPR complete flag ([Md.31] Status: b4) is not turned ON.

(5) The axis operation status during fast HPR is "in position control".

8.4 Selection of the HPR setting condition

Set this function when the servo amplifier to be connected supports "HPR setting condition". Refer to the servo amplifier instruction manual or manual for whether it is supported.

8.4.1 Outline of the HPR setting condition

If executing the home position return (HPR) when selecting "0: Need to pass servo motor Z-phase after power on" with the servo parameter of the servo amplifier "Function selection C-4 (PC17)", it is necessary that the servomotor has been rotated more than one revolution and passed the Z-phase (Motor reference position signal) and that the zero point pass signal ([Md.108] Servo status (low-order buffer memory address): b0) has turned ON.
When selecting "1: Not need to pass servo motor Z-phase after power on" with "Function selection C-4 (PC17)", it is possible to turn the zero point pass signal ([Md.108] Servo status (low-order buffer memory address): b0) ON without passing the zero point.

	Buffer memory address (low-order)	
	QD77MS2/QD77MS4	QD77MS16
[Md.108] Servo status: b0	876+100n	2476+100n

n: Axis No.-1

■ Data setting

To select the "HPR setting condition", set the "servo amplifier" shown in the following table.
Servo parameters are set for each axis.

The "HPR setting condition" is stored into the following buffer memory addresses. Since the servo parameters of MR-J5(W)-B are not in the buffer memory, use GX Works2 or axis control data to set them. Refer to "Appendix 6.6 Connection with MR-J5(W)-B" for details.

Setting item	Setting value	Setting details	Buffer memory address	
			QD77MS2 QD77MS4	QD77MS16
Function selection C-4 (PC17)	→	0 : Need to pass servo motor Z-phase after power on 1 : Not need to pass servo motor Z-phase after power on	30180+200n	28480+100n

n: Axis No.-1

*: Refer to Section 5.2.8 "Servo parameters" for information on the storage details.

■ Precautions during operation

(1) Set "Function selection C-4 (PC17)", and then turn off the power supply of the servo amplifier once and switch it on again to make that parameter setting valid.

Chapter 9 Major Positioning Control

The details and usage of the major positioning controls (control functions using the "positioning data") are explained in this chapter.

The major positioning controls include such controls as "positioning control" in which positioning is carried out to a designated position using the address information, "speed control" in which a rotating object is controlled at a constant speed, "speed-position switching control" in which the operation is shifted from "speed control" to "position control" and "position-speed switching control" in which the operation is shifted from "position control" to "speed control".

Execute the required settings to match each control.

9.1 Outline of major positioning controls 9- 2
9.1.1 Data required for major positioning control 9- 4
9.1.2 Operation patterns of major positioning controls 9- 5
9.1.3 Designating the positioning address 9- 15
9.1.4 Confirming the current value 9- 16
9.1.5 Control unit "degree" handling 9- 18
9.1.6 Interpolation control 9- 21
9.2 Setting the positioning data 9- 26
9.2.1 Relation between each control and positioning data 9- 26
9.2.2 1-axis linear control 9- 28
9.2.3 2-axis linear interpolation control 9- 32
9.2.4 3-axis linear interpolation control 9- 38
9.2.5 4-axis linear interpolation control 9- 44
9.2.6 1-axis fixed-feed control 9- 49
9.2.7 2-axis fixed-feed control (interpolation) 9- 52
9.2.8 3-axis fixed-feed control (interpolation) 9- 54
9.2.9 4-axis fixed-feed control (interpolation) 9- 59
9.2.10 2-axis circular interpolation control with sub point designation 9- 62
9.2.11 2-axis circular interpolation control with center point designation 9- 68
9.2.12 1-axis speed control 9- 76
9.2.13 2-axis speed control 9- 79
9.2.14 3-axis speed control 9- 83
9.2.15 4-axis speed control 9- 87
9.2.16 Speed-position switching control (INC mode) 9- 92
9.2.17 Speed-position switching control (ABS mode) 9-103
9.2.18 Position-speed switching control 9-112
9.2.19 Current value changing 9-122
9.2.20 NOP instruction 9-127
9.2.21 JUMP instruction 9-128
9.2.22 LOOP 9-130
9.2.23 LEND 9-132

9.1 Outline of major positioning controls

"Major positioning controls" are carried out using the "positioning data" stored in the Simple Motion module.
The basic controls such as position control and speed control are executed by setting the required items in this "positioning data", and then starting that positioning data.
The control method for the "major positioning controls" is set in setting item "[Da.2] Control method" of the positioning data.
Control defined as a "major positioning control" carries out the following types of control according to the "[Da.2] Control method" setting.
However, the position loop is included for commanding to servo amplifier in the speed control set in "[Da.2] Control method".
Use the "speed-torque control" (Refer to Section 12.1 "Speed-torque control") to execute the speed control not including position loop.

Major positioning control			[Da.2] Control method	Details
Position control	Linear control	1-axis linear control	ABS Linear 1 INC Linear 1	Positioning of the designated 1 axis is carried out from the start address (current stop position) to the designated position.
		2-axis linear interpolation control (Note-1)	ABS Linear 2 INC Linear 2	Using the designated 2 axes, linear interpolation control is carried out from the start address (current stop position) to the designated position.
		3-axis linear interpolation control (Note-1)	ABS Linear 3 INC Linear 3	Using the designated 3 axes, linear interpolation control is carried out from the start address (current stop position) to the designated position.
		4-axis linear interpolation control (Note-1)	ABS Linear 4 INC Linear 4	Using the designated 4 axes, linear interpolation control is carried out from the start address (current stop position) to the designated position.
	Fixed-feed control	1-axis fixed-feed control	Fixed-feed 1	Positioning of the designated 1 axis is carried out for a designated movement amount from the start address (current stop position). (The "[Md.20] Command position value" is set to "0" at the start.)
		2-axis fixed-feed control (Note-1)	Fixed-feed 2	Using the designated 2 axes, linear interpolation control is carried out for a designated movement amount from the start address (current stop position). (The "[Md.20] Command position value " is set to "0" at the start.)
		3-axis fixed-feed control (Note-1)	Fixed-feed 3	Using the designated 3 axes, linear interpolation control is carried out for a designated movement amount from the start address (current stop position). (The "[Md.20] Command position value " is set to "0" at the start.)
		4-axis fixed-feed control (Note-1)	Fixed-feed 4	Using the designated 4 axes, linear interpolation control is carried out for a designated movement amount from the start address (current stop position). (The "[Md.20] Command position value " is set to "0" at the start.)
	2-axis circular interpolation control (Note-1)	Sub point designation	ABS Circular sub INC Circular sub	Using the designated 2 axes, positioning is carried out in an arc path to a position designated from the start point address (current stop position).
		Center point designation	ABS Circular right ABS Circular left INC Circular right INC Circular left	

Major positioning control		[Da.2] Control method	Details
Speed control	1-axis speed control	Forward run speed 1 Reverse run speed 1	The speed control of the designated 1 axis is carried out.
	2-axis speed control (Note-1)	Forward run speed 2 Reverse run speed 2	The speed control of the designated 2 axes is carried out.
	3-axis speed control (Note-1)	Forward run speed 3 Reverse run speed 3	The speed control of the designated 3 axes is carried out.
	4-axis speed control (Note-1)	Forward run speed 4 Reverse run speed 4	The speed control of the designated 4 axes is carried out.
Speed-position switching control		Forward run speed/position Reverse run speed/position	The control is continued as position control (positioning for the designated address or movement amount) by turning ON the "speed-position switching signal" after first carrying out speed control.
Position-speed switching control		Forward run position/speed Reverse run position/speed	The control is continued as speed control by turning ON the "position-speed switching signal" after first carrying out position control.
Other control	NOP instruction	NOP	A nonexecutable control method. When this instruction is set, the operation is transferred to the next data operation, and the instruction is not executed.
	Current value changing	Current value changing	"[Md.20] Command position value" is changed to an address set in the positioning data. This can be carried out by either of the following 2 methods. ("[Md.21] Feed machine value" cannot be changed.) • Current value changing using the control method • Current value changing using the current value changing start No. (No. 9003).
	JUMP instruction	JUMP instruction	An unconditional or conditional JUMP is carried out to a designated positioning data No.
	LOOP	LOOP	A repeat control is carried out by repeat LOOP to LEND.
	LEND	LEND	Control is returned to the top of the repeat control by repeat LOOP to LEND. After the repeat operation is completed specified times, the next positioning data is run.

(Note-1): Control is carried out so that linear and arc paths are drawn using a motor set in two or more axes directions. This kind of control is called "interpolation control". (Refer to Section 9.1.6 "Interpolation control" for details.)

(Note-2): In the QD77MS2, when 3- or 4-axis interpolation is carried out, or axis 3 or axis 4 is designated to the axis to be interpolated for 2-axis interpolation, an error "Illegal interpolation description command" (error code: 521) will occur and the positioning control does not start.

9.1.1 Data required for major positioning control

The following table shows an outline of the "positioning data" configuration and setting details required to carry out the "major positioning controls".

Setting item			Setting details
Positioning data No. 1	[Da.1]	Operation pattern	Set the method by which the continuous positioning data (Ex: positioning data No.1, No.2, No.3) will be controlled. (Refer to Section 9.1.2.)
	[Da.2]	Control method	Set the control method defined as a "major positioning control". (Refer to Section 9.1.)
	[Da.3]	Acceleration time No.	Select and set the acceleration time at control start. (Select one of the four values set in [Pr.9], [Pr.25], [Pr.26], and [Pr.27] for the acceleration time.)
	[Da.4]	Deceleration time No.	Select and set the deceleration time at control stop. (Select one of the four values set in [Pr.10], [Pr.28], [Pr.29], and [Pr.30] for the deceleration time.)
	[Da.5]	Axis to be interpolated QD77MS2 QD77MS4	Set an axis to be interpolated (partner axis) during the 2-axis interpolation operation (Refer to Section 9.1.6.).
	[Da.6]	Positioning address/ movement amount	Set the target value during position control. (Refer to Section 9.1.3.)
	[Da.7]	Arc address	Set the sub point or center point address during circular interpolation control.
	[Da.8]	Command speed	Set the speed during the control execution.
	[Da.9]	Dwell time/JUMP destination positioning data No.	The time between the command pulse output is completed to the positioning completed signal is turned ON. Set it for absorbing the delay of the mechanical system to the instruction, such as the delay of the servo system (deviation).
	[Da.10]	M code/Condition data No./Number of LOOP to LEND repetitions	Set this item when carrying out sub work (clamp and drill stops, tool replacement, etc.) corresponding to the code No. related to the positioning data execution.
	[Da.20]	Axis to be interpolated No.1 QD77MS16	Set an axis to be interpolated during the 2- to 4-axis interpolation operation. (Refer to Section 9.1.6.)
	[Da.21]	Axis to be interpolated No.2 QD77MS16	
	[Da.22]	Axis to be interpolated No.3 QD77MS16	

(Note): The settings and setting requirement for the setting details of [Da.1] to [Da.10] and [Da.20] to [Da.22] differ according to the "[Da.2] Control method". (Refer to Section 9.2 "Setting the positioning data".)

■ Major positioning control sub functions

Refer to Section 3.2.5 "Combination of QD77MS main functions and sub functions" for details on "sub functions" that can be combined with the major positioning control.
Also refer to Chapter 13 "Control Sub Functions" for details on each sub function.

■ Major positioning control from GX Works2

"Major positioning control" can be executed by test function of GX Works2.
Refer to the help in "Simple Motion Module Setting Tool" of GX Works2 for details on carrying out major positioning control from the GX Works2.

REMARK

600 positioning data (positioning data No. 1 to 600) items can be set per axis.

9.1.2 Operation patterns of major positioning controls

In "major positioning control" (high-level positioning control), "[Da.1] Operation pattern" can be set to designate whether to continue executing positioning data after the started positioning data. The "operation pattern" includes the following 3 types.

- Positioning complete ——— (1) Independent positioning control (operation pattern: 00)
- Positioning continue ——— (2) Continuous positioning control (operation pattern: 01)
  ——— (3) Continuous path control (operation pattern: 11)

The following shows examples of operation patterns when "1-axis linear control (ABS linear 1)" is set in positioning data No. 1 to No. 6 of axis 1. Details of each operation pattern are shown on the following pages.

< Operation example when "1-axis linear positioning" is set in the positioning data of axis 1 >

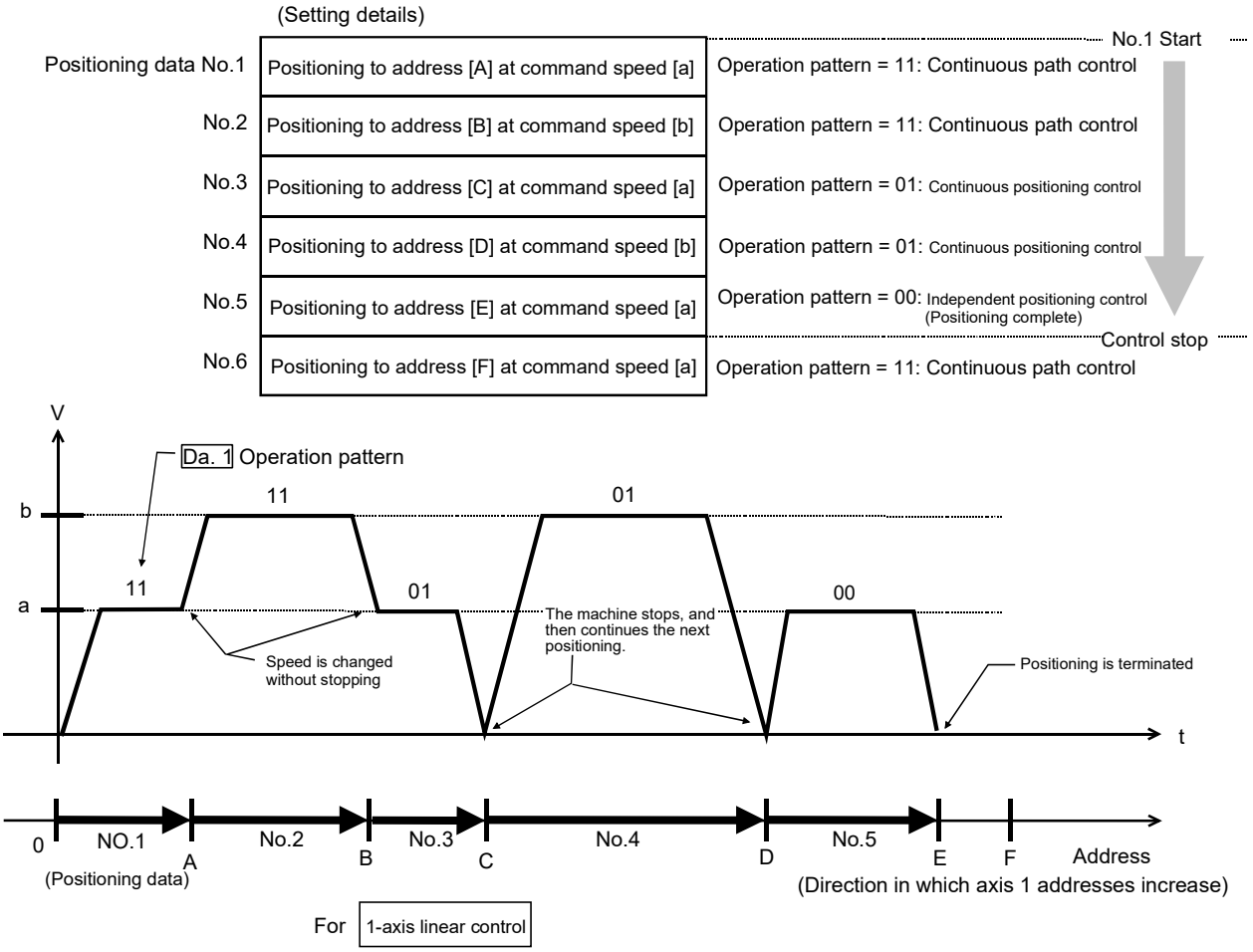

(One motor is driven, and positioning is carried out to an addresses designated in one direction.)

POINT

(1) When the operation pattern is continuous positioning control or continuous path control, the same address as the last value is specified in absolute system or the movement amount 0 is specified in incremental system, positioning control of movement amount 0 is executed.
(2) The BUSY signal turns ON even when position control of movement amount 0 is executed. However, since the ON time is short, the ON status may not be detected in the PLC program.
(3) The positioning complete signal turns ON even when position control of movement amount 0 is executed. ON time is determined by "[Pr.40] Positioning complete signal output time".

[1] Independent positioning control (Positioning complete)

This control is set when executing only one designated data item of positioning. If a dwell time is designated, the positioning completes after the designated time elapses.

This data (operation pattern [00] data) becomes the end of block data when carrying out block positioning. (The positioning stops after this data is executed.)

[QD77MS4 operation example]

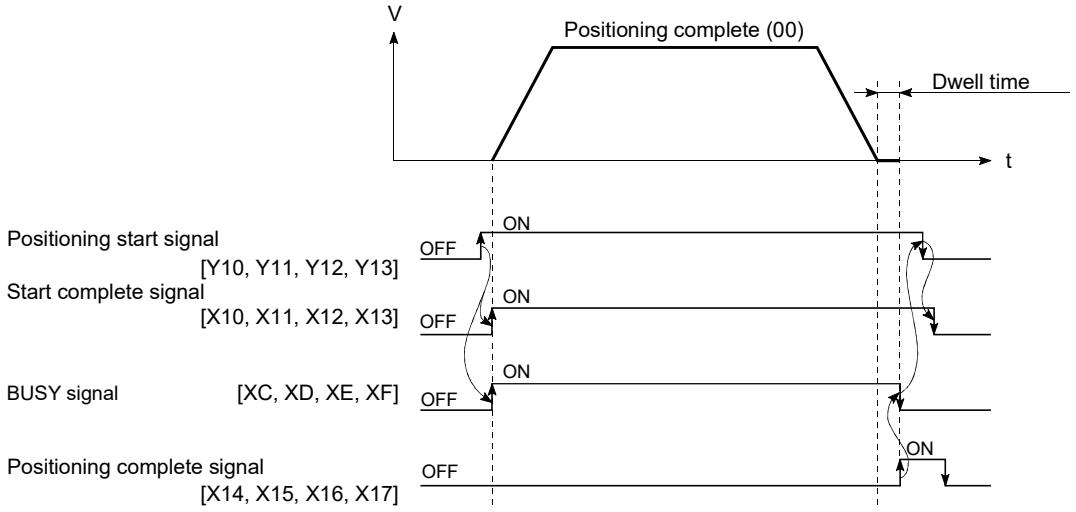

(Note): Refer to Section 3.3 for input/output signal of QD77MS16.

Fig. 9.1 Operation during independent positioning control

[2] Continuous positioning control

(1) The machine always automatically decelerates each time the positioning is completed. Acceleration is then carried out after the Simple Motion module command speed reaches 0 to carry out the next positioning data operation. If a dwell time is designated, the acceleration is carried out after the designated time elapses.

(2) In operation by continuous positioning control (operation pattern "01"), the next positioning No. is automatically executed. Always set operation pattern "00" in the last positioning data to complete the positioning.
If the operation pattern is set to positioning continue ("01" or "11"), the operation will continue until operation pattern "00" is found.
If the operation pattern "00" cannot be found, the operation may be carried out until the positioning data No. 600. If the operation pattern of the positioning data No. 600 is not completed, the operation will be started again from the positioning data No. 1.

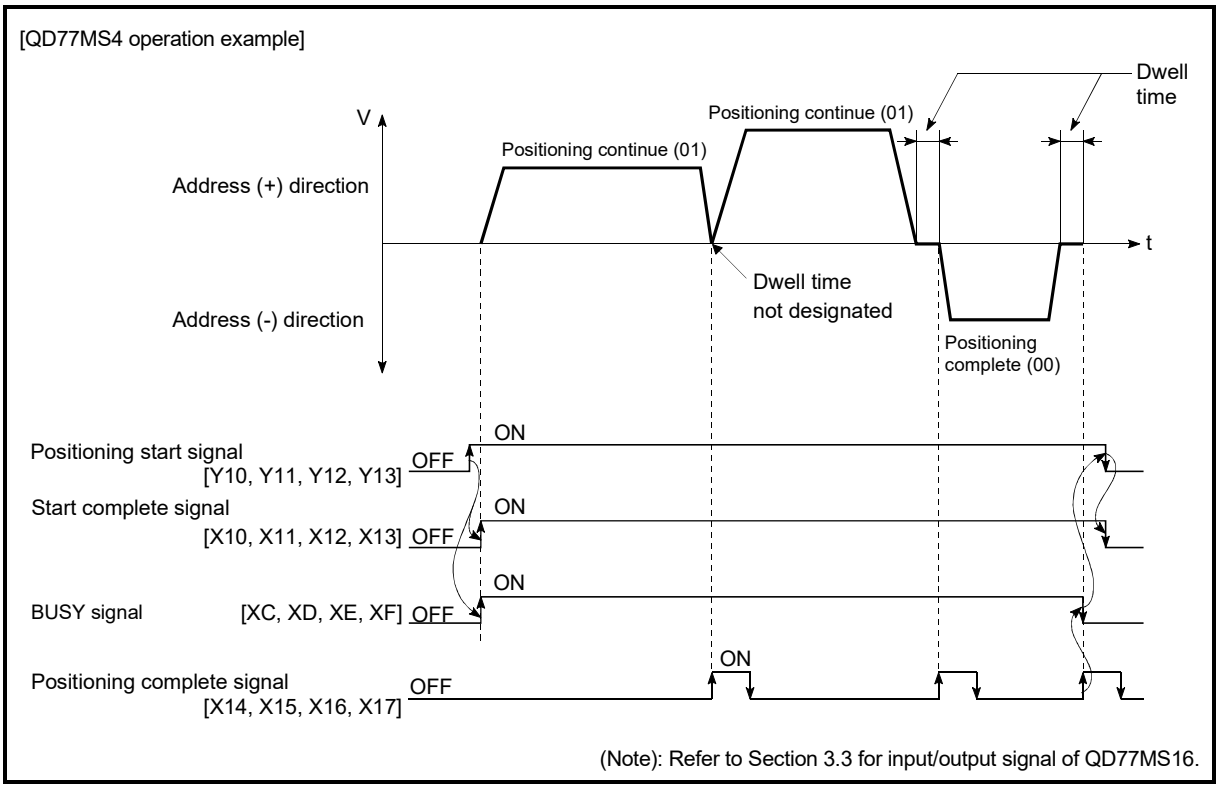

Fig. 9.2 Operation during continuous positioning control

[3] Continuous path control

(1) Continuous path control

(a) The speed is changed without deceleration stop between the command speed of the "positioning data No. currently being executed" and the speed of the "positioning data No. to carry out the next operation".
The speed is not changed if the current speed and the next speed are equal.

(b) The speed used in the previous positioning operation is continued when the command speed is set to "-1".

(c) Dwell time is ignored, even if it is set.

(d) The next positioning No. is executed automatically in operations by continuous path control (operation pattern "11"). Always complete the positioning by setting operation pattern "00" in the last positioning data. If the operation pattern is set to positioning continue ("01" or "11"), the operation will continue until operation pattern "00" is found.
If the operation pattern "00" cannot be found, the operation may be carried out until the positioning data No. 600. If the operation pattern of the positioning data No. 600 is not complete, the operation will be started again from the positioning data No. 1.

(e) The speed switching includes the "front-loading speed switching mode" in which the speed is changed at the end of the current positioning side, and the "standard speed switching mode" in which the speed is at the start of the next positioning side. (Refer to "[Pr.19] Speed switching mode".)

(f) In the continuous path control, the positioning may be completed before the set address/movement amount and the current data may be switched to the "positioning data that will be run next".
This is because a preference is given to the positioning at a command speed. In actuality, the positioning is completed before the set address/movement amount by an amount of remaining distance at speeds less than the command speed. The remaining distance ($\triangle \ell$) at speeds less than the command speed is $0 \leq \triangle \ell \leq$ (distance moved in operation cycle at a speed at the time of completion of the positioning).
The remaining distance ($\triangle \ell$) is output at the next positioning data No.

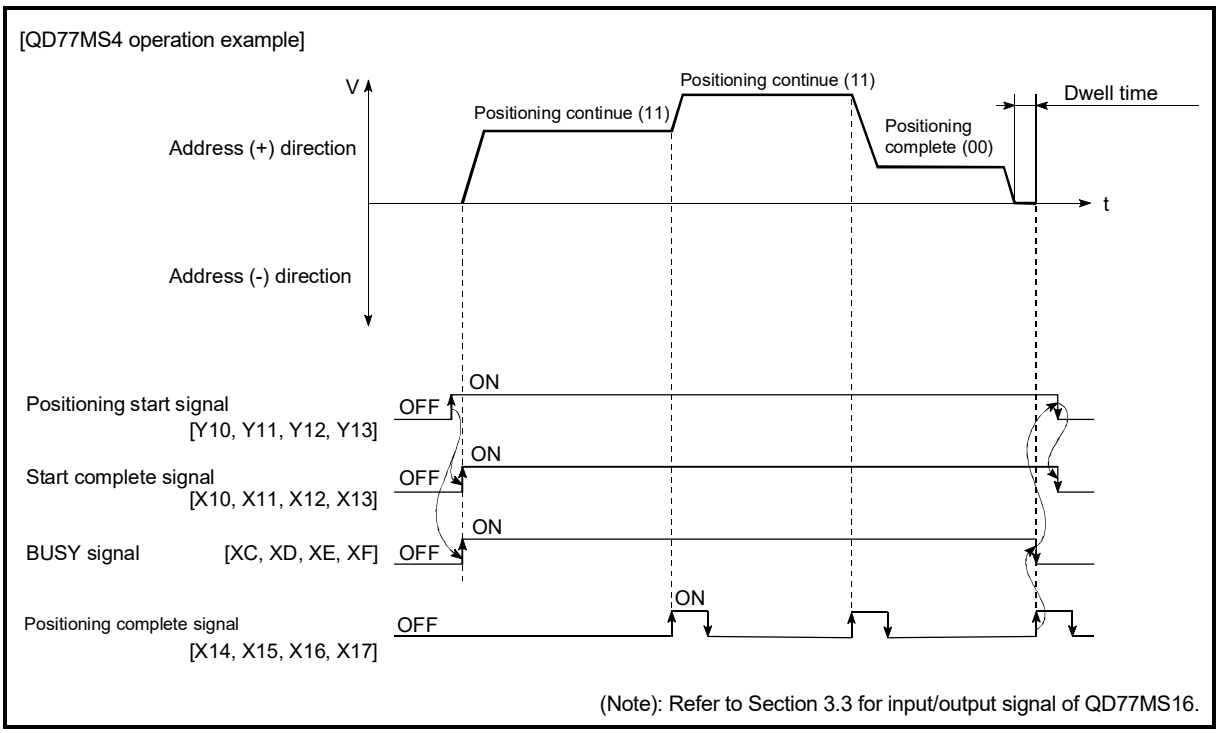

Fig. 9.3 Operation during continuous path control (Standard speed switching mode)

POINT

In the continuous path control, a speed variation will not occur using the near-pass function when the positioning data No. is switched (Refer to Section 13.3.3 "Near pass function").

(2) Deceleration stop conditions during continuous path control

Deceleration stops are not carried out in continuous path control, but the machine will carry out a deceleration stop to speed "0" in the following cases (a) to (c).

(a) When the operation pattern of the positioning data currently being executed is "continuous path control: 11", and the movement direction of the positioning data currently being executed differs from that of the next positioning data. (Only for 1-axis positioning control (Refer to the "POINTS" in the next page.))

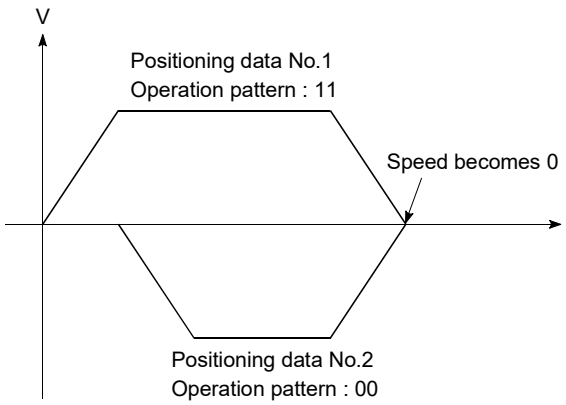

(b) During operation by step operation. (Refer to Section 13.7.1 "Step function".)

(c) When there is an error in the positioning data to carry out the next operation.

POINTS

(1) The movement direction is not checked during interpolation operations. Thus, automatic deceleration to a stop will not be carried out even if the movement direction is changed (See the figures below).
Because of this, the interpolation axis may rapidly reverse direction.
To avoid this rapid direction reversal in the interpolation axis, set the pass point to continuous positioning control "01" instead of setting it to continuous path control "11".

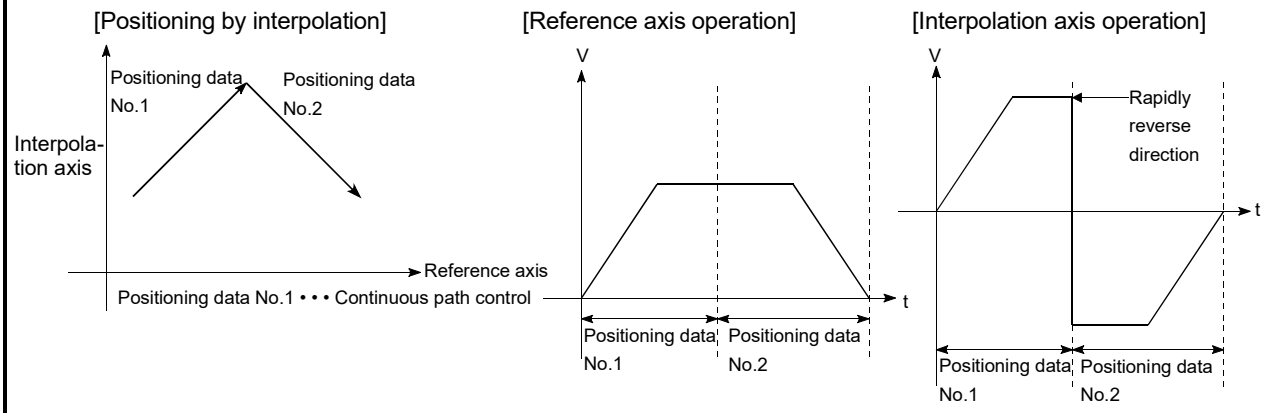

(2) When a "0" is set in the "[Da.6] Positioning address/movement amount" of the continuous path control positioning data, the command speed is reduced to 0 in an operation cycle.
When a "0" is set in the "[Da.6] Positioning address/movement amount" to increase the number of speed change points in the future, change the "[Da.2] Control method" to the "NOP" to make the control nonexecutable.
(Refer to Section 9.2.20 "NOP instruction".)

(3) In the continuous path control positioning data, assure a movement distance so that the execution time with that data is 100 ms or longer, or lower the command speed.

(3) Speed handling

(a) Continuous path control command speeds are set with each positioning data.
The Simple Motion module carries out the positioning at the speed designated with each positioning data.

(b) The command speed can be set to "–1" in continuous path control.
The control will be carried out at the speed used in the previous positioning data No. if the command speed is set to "–1".
(The "current speed" will be displayed in the command speed when the positioning data is set with a GX Works2. The current speed is the speed of the positioning control being executed currently.)

1) The speed does not need to be set in each positioning data when carrying out uniform speed control if "–1" is set beforehand in the command speed.
2) If the speed is changed or the override function is executed, in the previous positioning data when "–1" is set in the command speed, the operation can be continued at the new speed.
3) The error "No command speed" (error code: 503) occurs and positioning cannot be started if "–1" is set in the command speed of the first positioning data at start.

[Relation between the command speed and current speed]

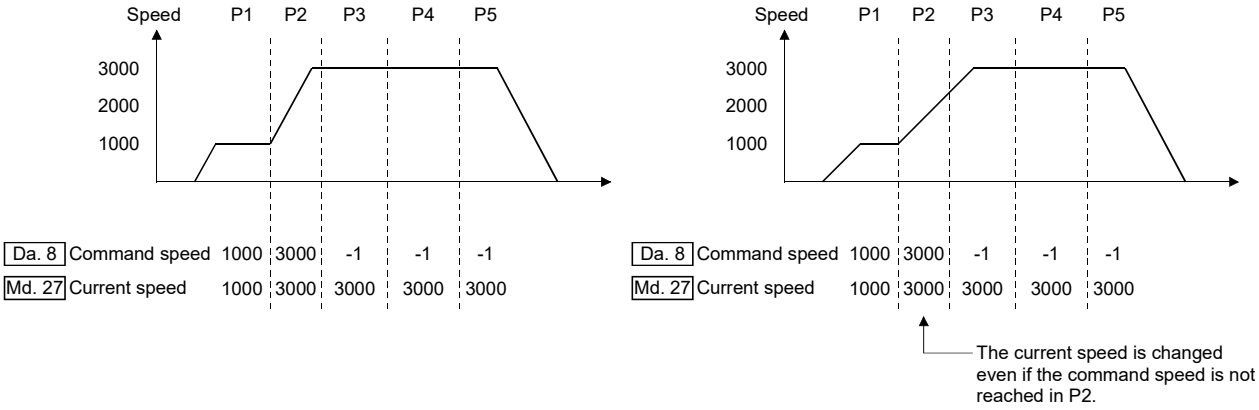

POINTS

(1) In the continuous path control, a speed variation will not occur using the near-pass function when the positioning data is switched (Refer to Section 13.3.3 "Near pass function").

(2) The Simple Motion module holds the command speed set with the positioning data, and the latest value of the speed set with the speed change request as the "[Md.27] Current speed". It controls the operation at the "current speed" when "-1" is set in the command speed.
(Depending on the relation between the movement amount and the speed, the speed command may not reach the command speed value, but even then the current speed will be updated.)

(3) When the address for speed change is identified beforehand, generate and execute the positioning data for speed change by the continuous path control to carry out the speed change without requesting the speed change with a sequence program.

(4) Speed switching
(Refer to "[Pr.19] Speed switching mode".)

The two modes for changing the speed are shown below.

- Standard speed switching……Switch the speed when executing the next positioning data.
- Front-loading speed switching….The speed switches at the end of the positioning data currently being executed.

(a) Standard speed switching mode

1) If the respective command speeds differ in the "positioning data currently being executed" and the "positioning data to carry out the next operation", the machine will accelerate or decelerate after reaching the positioning point set in the "positioning data currently being executed" and the speed will change over to the speed set in the "positioning data to carry out the next operation".
2) The parameters used in acceleration/deceleration to the command speed set in the "positioning data to carry out the next operation" are those of the positioning data to carry out acceleration/deceleration.
Speed switching will not be carried out if the command speeds are the same.

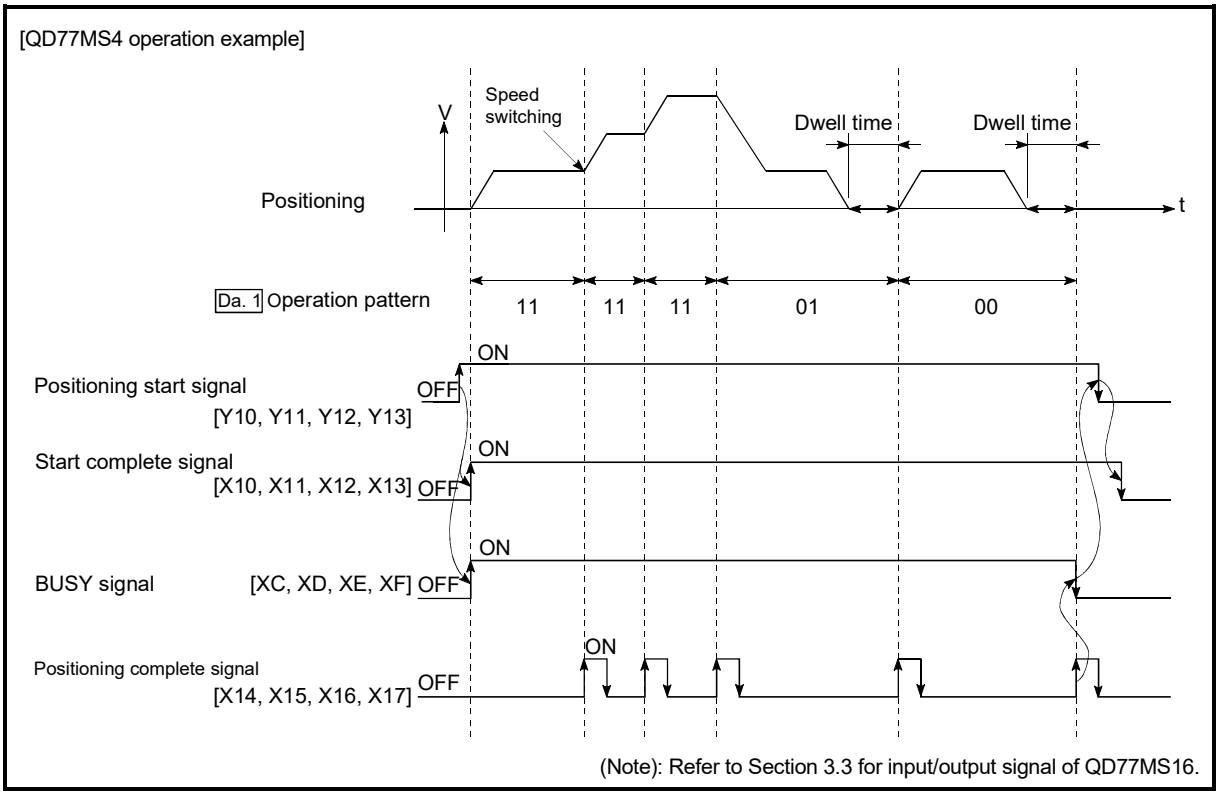

Fig. 9.4 Operation for the standard speed switching mode

3) Speed switching condition
If the movement amount is small in regard to the target speed, the current speed may not reach the target speed even if acceleration/deceleration is carried out. In this case, the machine is accelerated/decelerated so that it nears the target speed.
If the movement amount will be exceeded when automatic deceleration is required (Ex. Operation patterns "00", "01", etc.), the machine will immediately stop at the designated positioning address, and the warning "Insufficient movement amount" (warning code: 513) will occur.

[When the speed cannot change over in P2]

For the following relation of the speed
P1 = P4, P2 = P3, P1 < P2

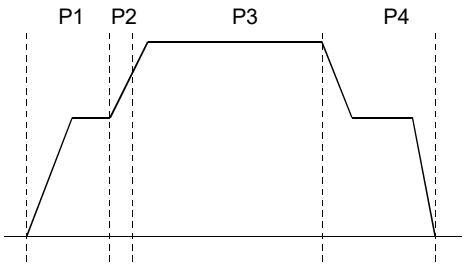

[When the movement amount is small during automatic deceleration]

The movement amount required to carry out the automatic deceleration cannot be secured, so the machine immediately stops in a speed ≠ 0 status.

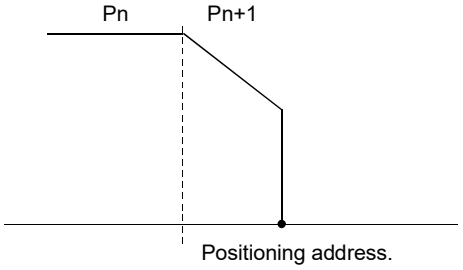

(b) Front-loading speed switching mode

1) If the respective command speeds differ in the "positioning data currently being executed" and the "positioning data to carry out the next operation", the speed will change over to the speed set in the "positioning data to carry out the next operation" at the end of the "positioning data currently being executed".

2) The parameters used in acceleration/deceleration to the command speed set in the "positioning data to carry out the next operation" are those of the positioning data to carry out acceleration/deceleration.
Speed switching will not be carried out if the command speeds are the same.

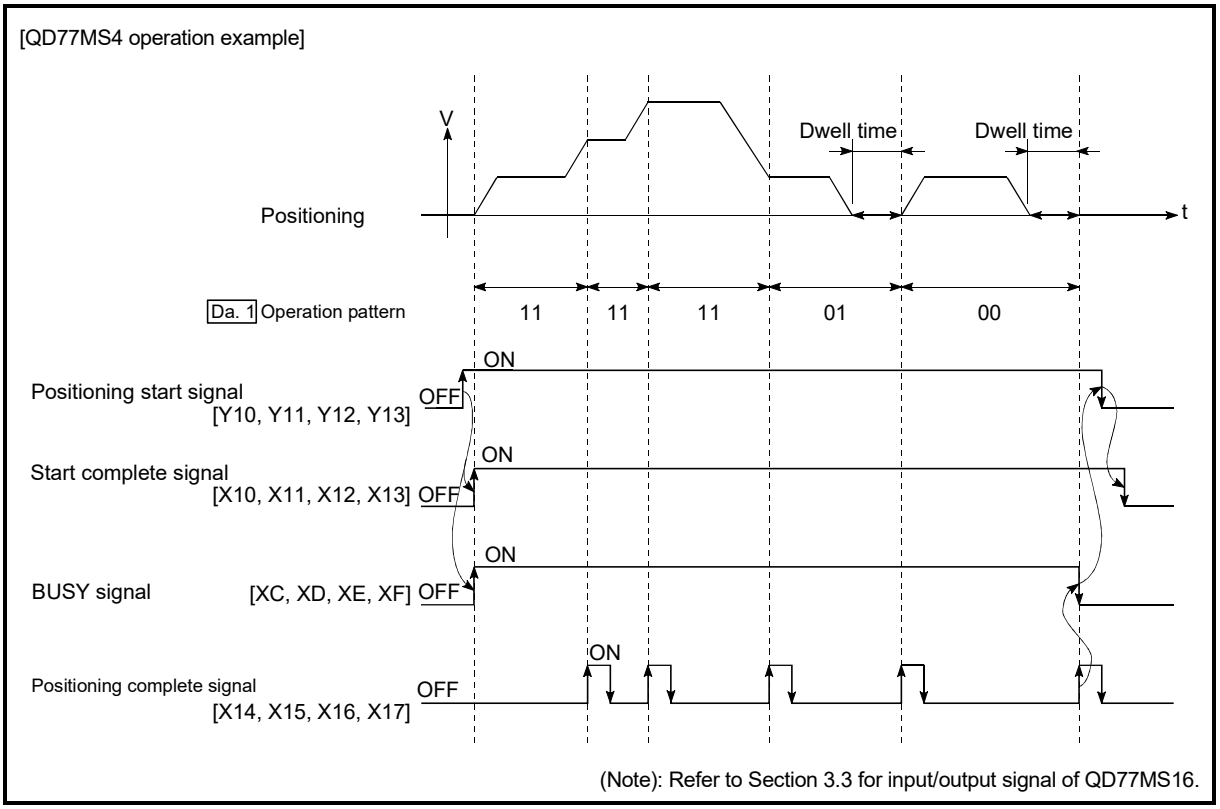

Fig. 9.5 Operation for the front-loading speed switching mode

3) Speed switching condition
If the movement amount is small in regard to the target speed, the current speed may not reach the target speed even if acceleration/deceleration is carried out. In this case, the machine is accelerated/decelerated so that it nears the target speed.
If the movement amount will be exceeded when automatic deceleration is required (Ex. Operation patterns "00", "01", etc.), the machine will immediately stop at the designated positioning address, and the warning "Insufficient movement amount" (warning code: 513) will occur.

[When the speed cannot change over to the P2 speed in P1]

For the following relation of the speed
P1 = P4, P2 = P3, P1 < P2

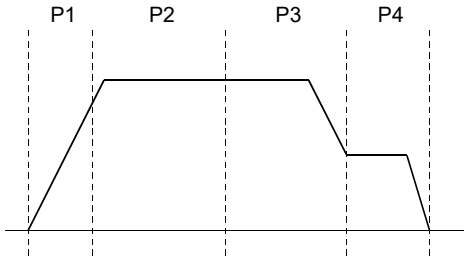

[When the movement amount is small during automatic deceleration]

The movement amount required to carry out the automatic deceleration cannot be secured, so the machine immediately stops in a speed $\neq 0$ status.

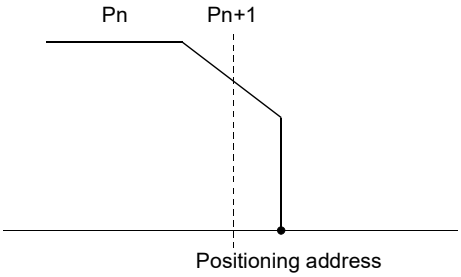

9.1.3 Designating the positioning address

The following shows the two methods for commanding the position in control using positioning data.

■ Absolute system

Positioning is carried out to a designated position (absolute address) having the HP as a reference. This address is regarded as the positioning address. (The start point can be anywhere.)

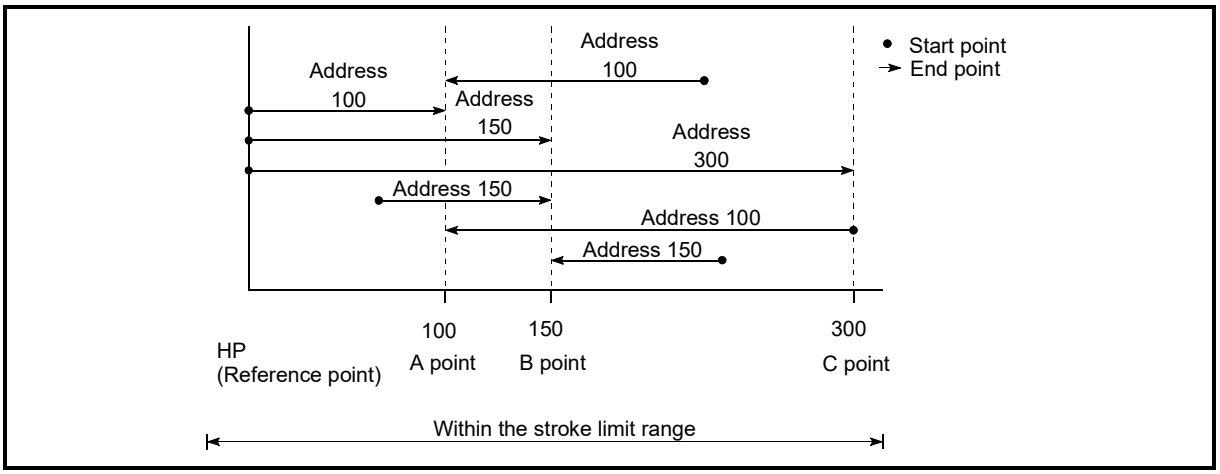

Fig. 9.6 Absolute system positioning

■ Incremental system

The position where the machine is currently stopped is regarded as the start point, and positioning is carried out for a designated movement amount in a designated movement direction.

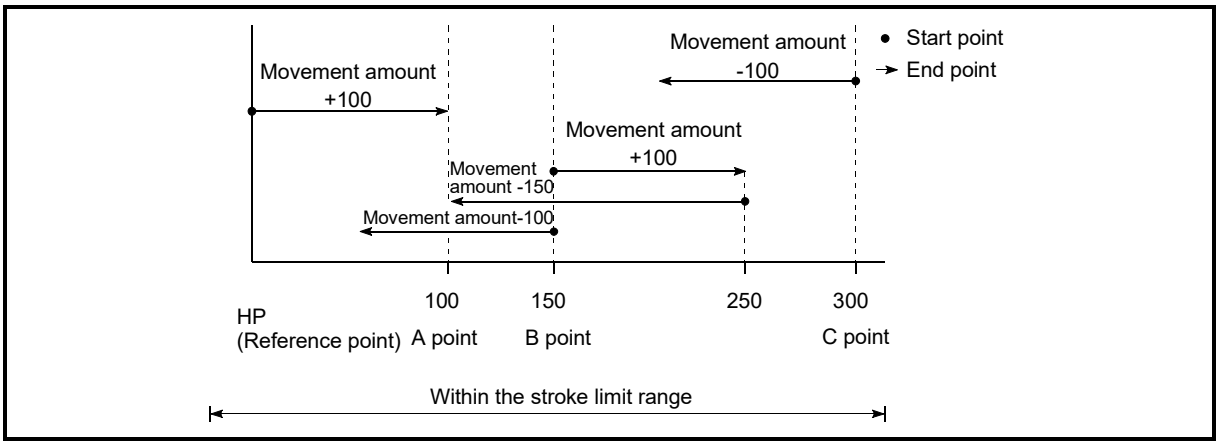

Fig. 9.7 Incremental system positioning

9.1.4 Confirming the current value

■ Values showing the current value

The following two types of addresses are used as values to show the position in the Simple Motion module.
These addresses ("command position value" and "feed machine value") are stored in the monitor data area, and used in monitoring the current value display, etc.

Command position value	• This is the value stored in "[Md.20] Command position value". • This value has an address established with a "machine HPR" as a reference, but the address can be changed by changing the current value to a new value.
Feed machine value	• This is the value stored in "[Md.21] Feed machine value". • This value always has an address established with a "machine HPR" as a reference. The address cannot be changed, even if the current value is changed to a new value.

The "command position value" and "feed machine value" are used in monitoring the current value display, etc.

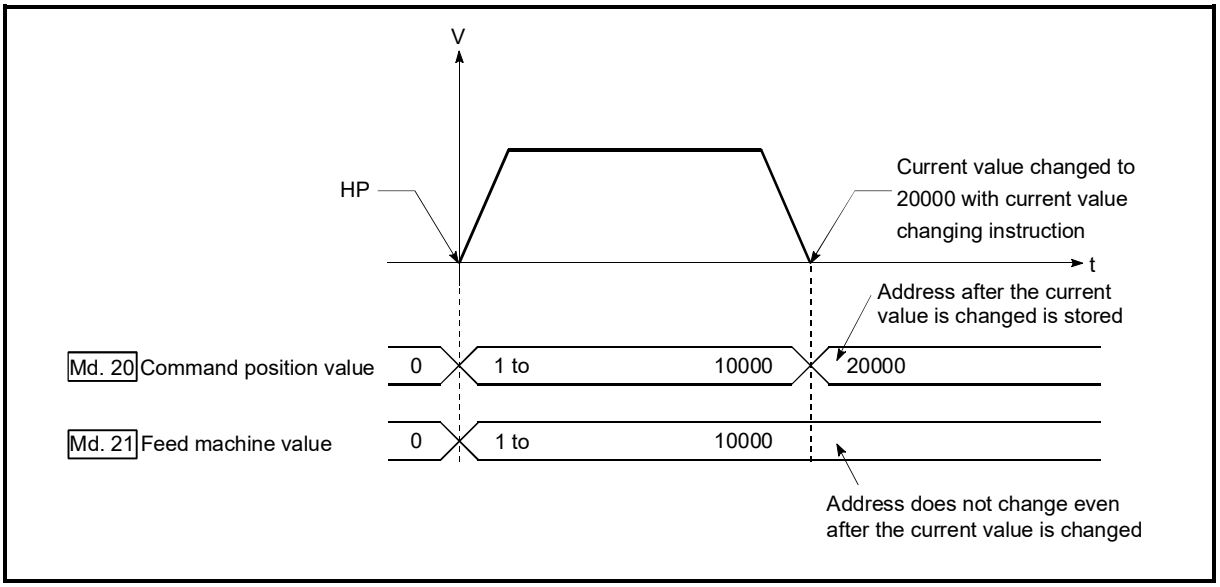

Fig. 9.8 Command position value and feed machine value

■ Restrictions

(1) Operation cycle error will occur in the current value refresh cycle when the stored "command position value" and "feed machine value" are used in the control.

■ Monitoring the current value

The "command position value" and "feed machine value" are stored in the following buffer memory addresses, and can be read using a "DFRO(P) instruction" or "DMOV(P) instruction" from the PLC CPU.

	Buffer memory addresses	
	QD77MS2/QD77MS4	QD77MS16
[Md.20] Command position value	800+100n 801+100n	2400+100n 2401+100n
[Md.21] Feed machine value	802+100n 803+100n	2402+100n 2403+100n

(1) The following shows the examples of programs to read out the command position value of the QD77MS4 [axis 1] to D104 and D105 when X40 is turned ON.

(a) For the DFRO(P) instruction

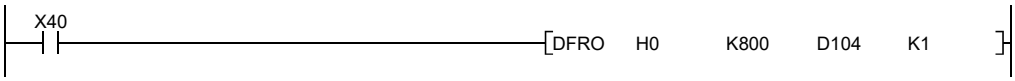

(b) For the DMOV(P) instruction

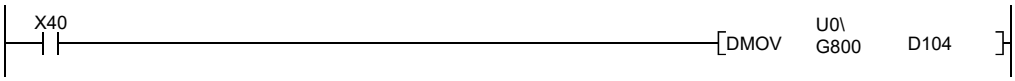

9.1.5 Control unit "degree" handling

When the control unit is set to "degree", the following items differ from when other control units are set.

[1] Command position value and feed machine value addresses

The address of "[Md.20] Command position value" becomes a ring address from 0 to 359.99999°. The address of "[Md.21] Feed machine value" will become a cumulative value. (They will not have a ring structure for values between 0 and 359.99999°.) However, "[Md.21] Feed machine value" is restored with cumulating the feed machine value before the power supply OFF (the rounded value within the range of 0 to 359.99999°) to the movement amount during the power supply OFF at the communication start with servo amplifier after the power supply ON or PLC CPU reset.

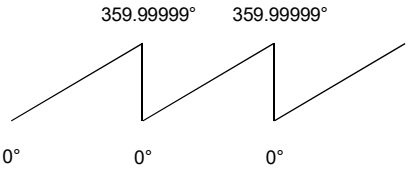

[2] Software stroke limit valid/invalid setting

With the control unit set to "degree", the software stroke limit upper and lower limit values are 0 to 359.99999°.

(a) Setting to validate software stroke limit

To validate the software stroke limit, set the software stroke limit lower limit value and the upper limit value in a clockwise direction.

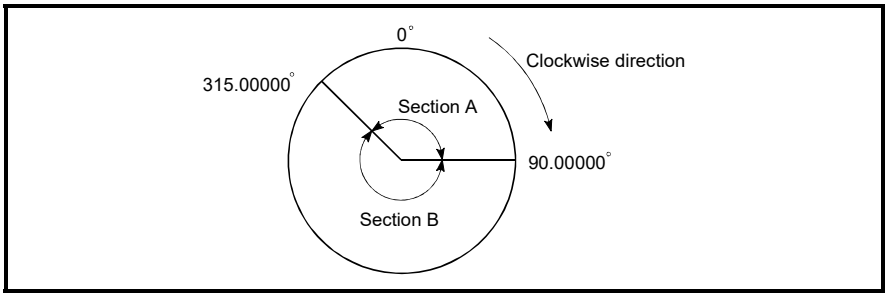

1) To set the movement range A, set as follows.

- Software stroke limit lower limit value.....315.00000°
- Software stroke limit upper limit value.....90.00000°

2) To set the movement range B, set as follows.

- Software stroke limit lower limit value.....90.00000°
- Software stroke limit upper limit value.....315.00000°

(b) Setting to invalidate software stroke limit

To invalidate the software stroke limit, set the software stroke limit lower limit value equal to the software stroke limit upper limit value.
The control can be carried out irrespective of the setting of the software stroke limit.

POINT

(1) When the upper/lower limit value of the axis which set the software stroke limit as valid are changed, perform the machine HPR after that.
(2) When the software stroke limit is set as valid in the incremental data system, perform the machine HPR after power supply on.

[3] Positioning control method when the control unit is set to "degree"

1) Absolute system

(a) When the software stroke limit is invalid

Positioning is carried out in the nearest direction to the designated address, using the current value as a reference.
(This is called "shortcut control".)

Example

1) Positioning is carried out in a clockwise direction when the current value is moved from 315° to 45°.
2) Positioning is carried out in a counterclockwise direction when the current value is moved from 45° to 315°.

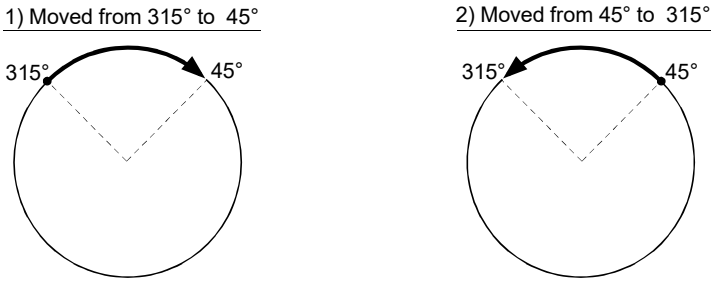

To designate the positioning direction (not carrying out the shortcut control), the shortcut control is invalidated and positioning in a designated direction is carried out by the "[Cd.40] ABS direction in degrees".
This function can perform only when the software stroke limit is invalid. When the software stroke limit is valid, the error "Illegal setting of ABS direction in unit of degree" (error code: 546) occurs and positioning is not started.
To designate the movement direction in the ABS control, a "1" or "2" is written to the "[Cd.40] ABS direction in degrees" of the buffer memory (initial value: 0).
The value written to the "[Cd.40] ABS direction in degrees" becomes valid only when the positioning control is started.
In the continuous positioning control and continuous path control, the operation is continued with the setting set at the time of start even if the setting is changed during the operation.

Name	Function	Buffer memory address		Initial value
		QD77MS2 QD77MS4	QD77MS16	
[Cd.40] ABS direction in degrees	The ABS movement direction in the unit of degree is designated. 0: Shortcut (direction setting invalid) 1: ABS clockwise 2: ABS counterclockwise	1550+100n	4350+100n	0

(b) When the software stroke limit is valid

The positioning is carried out in a clockwise/counterclockwise direction depending on the software stroke limit range setting method.
Because of this, positioning with "shortcut control" may not be possible.

Example

When the current value is moved from 0° to 315°, positioning is carried out in the clockwise direction if the software stroke limit lower limit value is 0° and the upper limit value is 345°.

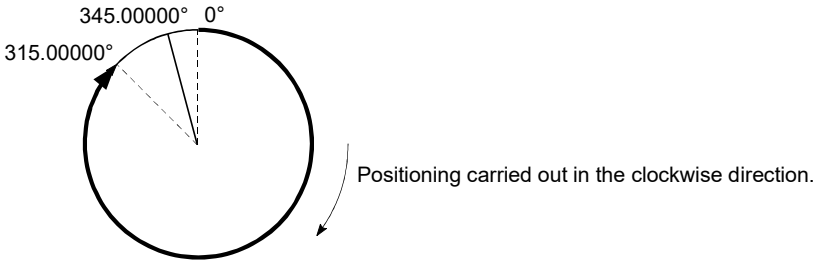

POINT

Positioning addresses are within a range of 0° to 359.99999°.
Use the incremental system to carry out positioning of one rotation or more.

2) Incremental system

Positioning is carried out for a designated movement amount in a designated movement direction when in the incremental system of positioning.
The movement direction is determined by the sign (+, –) of the movement amount.

- For a positive (+) movement direction.....Clockwise
- For a negative (–) movement direction ....Counterclockwise

POINT

Positioning of 360° or more can be carried out with the incremental system.
At this time, set as shown below to invalidate the software stroke limit.
[Software stroke limit upper limit value = Software stroke limit lower limit value]
Set the value within the setting range (0° to 359.99999°).

9.1.6 Interpolation control

■ Meaning of interpolation control

In "2-axis linear interpolation control", "3-axis linear interpolation control", "4-axis linear interpolation control", "2-axis fixed-feed control", "3-axis fixed-feed control", "4-axis fixed-feed control", "2-axis speed control", "3-axis speed control", "4-axis speed control", and "2-axis circular interpolation control", control is carried out so that linear and arc paths are drawn using a motor set in two to four axis directions. This kind of control is called "interpolation control".
In interpolation control, the axis in which the control method is set is defined as the "reference axis", and the other axis is defined as the "interpolation axis".
The Simple Motion module controls the "reference axis" following the positioning data set in the "reference axis", and controls the "interpolation axis" corresponding to the reference axis control so that a linear or arc path is drawn.
The following table shows the reference axis and interpolation axis combinations.

Axis definition / Interpolation of "[Da.2] Control method"	QD77MS2		QD77MS4		QD77MS16	
	Reference axis	Interpolation axis	Reference axis	Interpolation axis	Reference axis	Interpolation axis
2-axis linear interpolation control 2-axis fixed-feed control 2-axis circular interpolation control 2-axis speed control	Any of axes 1 to 2	"Axis to be interpolated" set in reference axis	Any of axes 1 to 4	"Axis to be interpolated" set in reference axis	Any of axes 1 to 16	"Axis to be interpolated No.1" set in reference axis
3-axis linear interpolation control 3-axis fixed-feed control 3-axis speed control	–		Axis 1	Axis 2, Axis 3		"Axis to be interpolated No.1" and "Axis to be interpolated No.2" set in reference axis
	–		Axis 2	Axis 3, Axis 4		
	–		Axis 3	Axis 4, Axis 1		
	–		Axis 4	Axis 1, Axis 2		
4-axis linear interpolation control 4-axis fixed-feed control 4-axis speed control	–		Axis 1	Axis 2, Axis 3, Axis 4		"Axis to be interpolated No.1", "Axis to be interpolated No.2" and "Axis to be interpolated No.3" set in reference axis
	–		Axis 2	Axis 3, Axis 4, Axis 1		
	–		Axis 3	Axis 4, Axis 1, Axis 2		
	–		Axis 4	Axis 1, Axis 2, Axis 3		

– : Setting not required (Use the initial value or a value within the setting range.)

■ Setting the positioning data during interpolation control

When carrying out interpolation control, the same positioning data Nos. are set for the "reference axis" and the "interpolation axis".
The following table shows the "positioning data" setting items for the reference axis and interpolation axis.

Setting item \ Axis			Reference axis setting item	Interpolation axis setting item
Same positioning data Nos	[Da.1]	Operation pattern	◎	–
	[Da.2]	Control method	Linear 2, 3, 4, Fixed-feed 2, 3, 4, Circular sub, Circular right, Circular left Forward run speed 2, 3, 4 Reverse run speed 2, 3, 4	–
	[Da.3]	Acceleration time No.	◎	–
	[Da.4]	Deceleration time No.	◎	–
	[Da.5]	Axis to be interpolated QD77MS2 QD77MS4	○ ＊1	–
	[Da.6]	Positioning address/ movement amount	△ (Forward run speed 2, 3, and 4. Reverse run speed 2, 3, and 4 not required.)	△ (Forward run speed 2, 3, and 4. Reverse run speed 2, 3, and 4 not required.)
	[Da.7]	Arc address	△ (Only during circular sub, circular right, and circular left).	△ (Only during circular sub, circular right, and circular left).
	[Da.8]	Command speed	◎	△ (Only during forward run speed 2, 3, 4 and reverse run speed 2, 3, 4).
	[Da.9]	Dwell time/JUMP destination positioning data No.	○	–
	[Da.10]	M code/Condition data No./Number of LOOP to LEND repetitions	○	–
	[Da.20]	Axis to be interpolated No.1 QD77MS16	○ ＊2	–
	[Da.21]	Axis to be interpolated No.2 QD77MS16	○ ＊2	–
	[Da.22]	Axis to be interpolated No.3 QD77MS16	○ ＊2	–

◎ : Setting always required
○ : Set according to requirements (Set to "–" when not used.)
△ : Setting restrictions exist
– : Setting not required (Use the initial value or a value within the setting range.)
＊1: For 2-axis interpolation, the partner axis is set. If the self-axis is set, the error "Illegal interpolation description command" (error code: 521) will occur. For 3- and 4-axis interpolation, the axis setting is not required.
＊2: The axis No. is set to axis to be interpolated No.1 for 2-axis linear interpolation, to axis to be interpolated No.1 and No.2 for 3-axis linear interpolation, and to axis to be interpolated No.1 to No.3 for 4-axis linear interpolation.
If the self-axis is set, an error "Illegal interpolation description command (error code: 521)" will occur.
The axes that are not used are not required.

(Note): Refer to Section 5.3 "List of positioning data" for information on the setting details.

■ Starting the interpolation control

The positioning data Nos. of the reference axis (axis in which interpolation control was set in "[Da.2] Control method") are started when starting the interpolation control. (Starting of the interpolation axis is not required.)
The following errors or warnings will occur and the positioning will not start if both reference axis and the interpolation axis are started.

- Reference axis : Interpolation while interpolation axis BUSY (error code: 519)
- Interpolation axis : Control method setting error (error code: 524), start during operation (warning code: 100).

■ Interpolation control continuous positioning

When carrying out interpolation control in which "continuous positioning control" and "continuous path control" are designated in the operation pattern, the positioning method for all positioning data from the started positioning data to the positioning data in which "positioning complete" is set must be set to interpolation control.
The number of the interpolation axes and axes to be interpolated cannot be changed from the intermediate positioning data. When the number of the interpolation axes and axes to be interpolated are changed, the error "Control method setting error" (error code: 524) will occur and the positioning will stop.

■ Speed during interpolation control

Either the "composite speed" or "reference axis speed" can be designated as the speed during interpolation control.
([Pr.20] Interpolation speed designation method)
Only the "Reference axis speed" can be designated in the following interpolation control.
When a "composite speed" is set and positioning is started, the error "Interpolation mode error" (error code: 523) occurs, and the system will not start.

- 4-axis linear interpolation
- 2-axis speed control
- 3-axis speed control
- 4-axis speed control

■ Cautions in interpolation control

(1) If any axis exceeds "[Pr.8] Speed limit value" in the 2- to 4-axes speed control, the axis exceeding the speed limit value is controlled with the speed limit value. The speeds of the other axes being interpolated are suppressed by the command speed ratio.
(2) If the reference axis exceeds "[Pr.8] Speed limit value" during 2-axis circular interpolation control, the reference axis is controlled at the speed limit value. (The speed limit does not function on the interpolation axis side.)
(3) If any axis exceeds "[Pr.8] Speed limit value" during 2- to 4-axis linear interpolation control or 2- to 4-axis fixed-feed control, the axis exceeding the speed limit value is controlled with the speed limit value. The speeds of the other axes being interpolated are suppressed by the movement amount ratio.
(4) In 2- to 4-axis interpolation, you cannot change the combination of interpolated axes midway through operation.

POINT

When the "reference axis speed" is set during interpolation control, set so the major axis side becomes the reference axis. If the minor axis side is set as the reference axis, the major axis side speed may exceed the "[Pr.8] Speed limit value".

■ Limits to interpolation control

There are limits to the interpolation control that can be executed and speed ([Pr.20] Interpolation speed designation method) that can be set, depending on the "[Pr.1] Unit setting" of the reference axis and interpolation axis. (For example, circular interpolation control cannot be executed if the reference axis and interpolation axis units differ.)

The following table shows the interpolation control and speed designation limits.

"[Da.2] Control method" interpolation control	[Pr.20] Interpolation speed designation method	[Pr.1] Unit setting ＊1	
		Reference axis and interpolation axis units are the same, or a combination of "mm" and "inch". ＊3	Reference axis and interpolation axis units differ ＊3
Linear 2 (ABS, INC) Fixed-feed 2	Composite speed	○	×
	Reference axis speed	○	○
Circular sub (ABS, INC) Circular right (ABS, INC) Circular left (ABS, INC)	Composite speed	○ ＊2	×
	Reference axis speed	×	×
Linear 3 (ABS, INC) Fixed-feed 3	Composite speed	○	×
	Reference axis speed	○	○
Linear 4 (ABS, INC) Fixed-feed 4	Composite speed	×	×
	Reference axis speed	○	○
2 to 4-axis speed control	Composite speed	×	×
	Reference axis speed	○	○

○ : Setting possible, × : Setting not possible.

＊1: "mm" and "inch" unit mix possible.
When "mm" and "inch" are mixed, convert as follows for the positioning.

- If interpolation control units are "mm", positioning is controlled by calculating position commands from the address, travel value, positioning speed and electronic gear, which have been converted to "mm" using the formula: inch setting value × 25.4 = mm setting value.
- If interpolation control units are "inch", positioning is controlled by calculating position commands from the address, travel value, positioning speed and electronic gear, which have been converted to "inch" using the formula: mm setting value ÷ 25.4 = inch setting value.

＊2: "degree" setting not possible. The error "Circular interpolation not possible" (error code: 535) will occur and the positioning control does not start if circular interpolation control is set when the unit is "degree". The machine will carry out a deceleration stop if "degree" is set during positioning control.

＊3: The unit set in the reference axis will be used for the speed unit during control if the units differ or if "mm" and "inch" are combined.

■ Axis operation status during interpolation control

"Interpolation" will be stored in the "[Md.26] Axis operation status" during interpolation control. "Standby" will be stored when the interpolation operation is terminated. Both the reference axis and interpolation axis will carry out a deceleration stop if an error occurs during control, and "Error" will be stored in the operation status.

MEMO

9.2 Setting the positioning data

9.2.1 Relation between each control and positioning data

The setting requirements and details for the setting items of the positioning data to be set differ according to the "[Da.2] Control method".
The following table shows the positioning data setting items corresponding to the different types of control. Details and settings for the operation of each control are shown in Section 9.2.2 and subsequent sections.
(In this section, it is assumed that the positioning data setting is carried out using GX Works2.)

Positioning data setting items \ Major positioning control			Position control			Speed control	
			1-axis linear control 2-axis linear interpolation control 3-axis linear interpolation control 4-axis linear interpolation control	1-axis fixed-feed control 2-axis fixed-feed control 3-axis fixed-feed control 4-axis fixed-feed control	2-axis circular interpolation control	1-axis, 2-axis, 3-axis, 4-axis Speed control	
[Da.1]	Operation pattern	Independent positioning control (Positioning complete)	◎	◎	◎	◎	
		Continuous positioning control	◎	◎	◎	×	
		Continuous path control	◎	×	◎	×	
[Da.2]	Control method		Linear 1 Linear 2 Linear 3 Linear 4 ✻	Fixed-feed 1 Fixed-feed 2 Fixed-feed 3 Fixed-feed 4	Circular sub Circular right Circular left ✻	Forward run speed 1 Reverse run speed 1 Forward run speed 2 Reverse run speed 2 Forward run speed 3 Reverse run speed 3 Forward run speed 4 Reverse run speed 4	
[Da.3]	Acceleration time No.		◎	◎	◎	◎	
[Da.4]	Deceleration time No.		◎	◎	◎	◎	
[Da.5]	Axis to be interpolated QD77MS2 QD77MS4		◎: 2-axis –: 1, 3, 4-axis				
[Da.6]	Positioning address/movement amount		◎	◎	◎	–	
[Da.7]	Arc address		–	–	◎	–	
[Da.8]	Command speed		◎	◎	◎	◎	
[Da.9]	Dwell time/JUMP destination positioning data No.		○	○	○	–	
[Da.10]	M code/Condition data No./Number of LOOP to LEND repetitions		○	○	○	○	
[Da.20]	Axis to be interpolated No.1 QD77MS16		◎: 2, 3, 4-axis –: 1-axis				
[Da.21]	Axis to be interpolated No.2 QD77MS16		◎: 3, 4-axis –: 1, 2-axis				
[Da.22]	Axis to be interpolated No.3 QD77MS16		◎: 4-axis –: 1, 2,3-axis				

	Speed-position switching control	Position- speed switching control	Other control				
			NOP instruction	Current value changing	JUMP instruction	LOOP	LEND
	◎	◎	–	◎	–	–	–
	◎	×	–	◎	–	–	–
	×	×	–	×	–	–	–
	Forward run speed/position Reverse run speed/position ✻	Forward run position/speed Reverse run position/speed	NOP	Current value changing	JUMP instruction	LOOP	LEND
	◎	◎	–	–	–	–	–
	◎	◎	–	–	–	–	–
	–	–	–	–	–	–	–
	◎	◎	–	New address	–	–	–
	–	–	–	–	–	–	–
	◎	◎	–	–	–	–	–
	○	○	–	–	JUMP destination positioning data No.	–	–
	○	○	–	○	JUMP Condition data No.	Number of LOOP to LEND repetition	–
	–	–	–	–	–	–	–
	–	–	–	–	–	–	–
	–	–	–	–	–	–	–

◎ : Always set
○ : Set according to requirements ("–" when not set)
× : Setting not possible (If set, the error "Continuous path control not possible" (error code: 516) will occur at start.)
– : Setting not required (Use the initial value or a value within the setting range.)
✻ : The "ABS (absolute) system" or "INC (incremental) system" can be used for the control system.

REMARK

- It is recommended that the "positioning data" be set whenever possible with GX Works2. Execution by sequence program uses many sequence programs and devices. The execution becomes complicated, and the scan times will increase.

9.2.2 1-axis linear control

In "1-axis linear control" ("[Da.2] Control method" = ABS linear 1, INC linear 1), one motor is used to carry out position control in a set axis direction.

[1] 1-axis linear control (ABS linear 1)

■ Operation chart

In absolute system 1-axis linear control, positioning is carried out from the current stop position (start point address) to the address (end point address) set in "[Da.6] Positioning address/movement amount".

Example

When the start point address (current stop position) is 1000, and the end point address (positioning address) is 8000, positioning is carried out in the positive direction for a movement amount of 7000 (8000-1000)

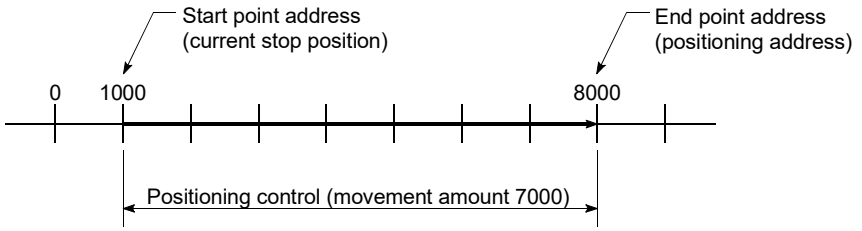

■ Positioning data setting example

[When "1-axis linear control (ABS linear 1)" is set in positioning data No. 1 of axis 1.]

Setting item			Setting example		Setting details
			QD77MS2 QD77MS4	QD77MS16	
Axis 1 Positioning data No. 1	[Da.1]	Operation pattern	Positioning complete		Set "Positioning complete" assuming the next positioning data will not be executed.
	[Da.2]	Control method	ABS linear 1		Set absolute system 1-axis linear control.
	[Da.3]	Acceleration time No.	1		Designate the value set in "[Pr.25] Acceleration time 1" as the acceleration time at start.
	[Da.4]	Deceleration time No.	0		Designate the value set in "[Pr.10] Deceleration time 0" as the deceleration time at deceleration.
	[Da.5]	Axis to be interpolated QD77MS2 QD77MS4	–		Setting not required (setting value is ignored).
	[Da.6]	Positioning address/ movement amount	8000.0μm		Set the positioning address. (Assuming "mm" is set in "[Pr.1] Unit setting".)
	[Da.7]	Arc address	–		Setting not required (setting value is ignored).
	[Da.8]	Command speed	6000.00mm/min		Set the speed during movement to the positioning address.
	[Da.9]	Dwell time/JUMP destination positioning data No.	500ms		Set the time the machine dwells after the positioning stop (command stop) to the output of the positioning complete signal.
	[Da.10]	M code/Condition data No./Number of LOOP to LEND repetitions	10		Set this when other sub operation commands are issued in combination with the No.1 positioning data.
	[Da.20]	Axis to be interpolated No.1 QD77MS16		–	Setting not required (setting value is ignored).
	[Da.21]	Axis to be interpolated No.2 QD77MS16		–	
	[Da.22]	Axis to be interpolated No.3 QD77MS16		–	

(Note): Refer to Section 5.3 "List of positioning data" for information on the setting details.

[2] 1-axis linear control (INC linear 1)

■ Operation chart

In incremental system 1-axis linear control, positioning is carried out from the current stop position (start point address) to a position at the end of the movement amount set in "[Da.6] Positioning address/movement amount". The movement direction is determined by the sign of the movement amount.

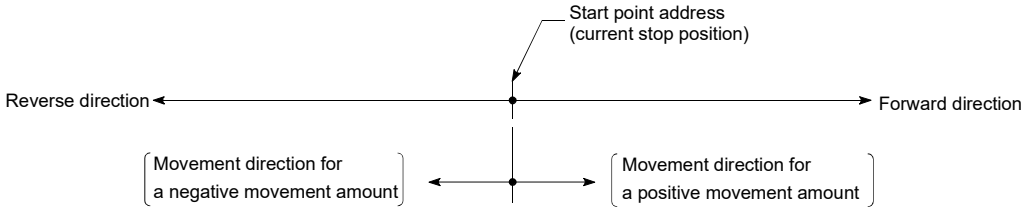

Example

When the start point address is 5000, and the movement amount is -7000, positioning is carried out to the -2000 position.

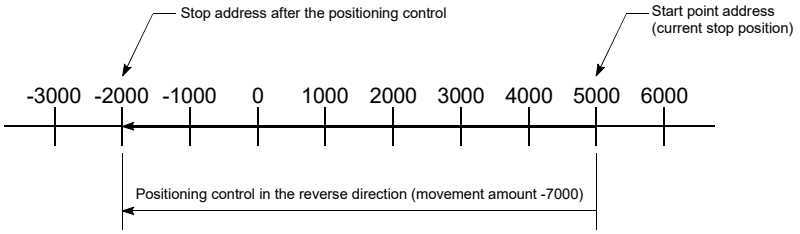

■ Positioning data setting example

[When "1-axis linear control (INC linear 1)" is set in positioning data No. 1 of axis 1]

Setting item			Setting example		Setting details
			QD77MS2 QD77MS4	QD77MS16	
Axis 1 Positioning data No. 1	[Da.1]	Operation pattern	Positioning complete		Set "Positioning complete" assuming the next positioning data will not be executed.
	[Da.2]	Control method	INC linear 1		Set incremental system 1-axis linear control.
	[Da.3]	Acceleration time No.	1		Designate the value set in "[Pr.25] Acceleration time 1" as the acceleration time at start.
	[Da.4]	Deceleration time No.	0		Designate the value set in "[Pr.10] Deceleration time 0" as the deceleration time at deceleration.
	[Da.5]	Axis to be interpolated QD77MS2 QD77MS4	–		Setting not required (setting value is ignored).
	[Da.6]	Positioning address/ movement amount	-7000.0μm		Set the movement amount. (Assuming "mm" is set in "[Pr.1] Unit setting".)
	[Da.7]	Arc address	–		Setting not required (setting value is ignored).
	[Da.8]	Command speed	6000.00mm/min		Set the speed during movement.
	[Da.9]	Dwell time/JUMP destination positioning data No.	500ms		Set the time the machine dwells after the positioning stop (command stop) to the output of the positioning complete signal.
	[Da.10]	M code/Condition data No./Number of LOOP to LEND repetitions	10		Set this when other sub operation commands are issued in combination with the No.1 positioning data.
	[Da.20]	Axis to be interpolated No.1 QD77MS16		–	Setting not required (setting value is ignored).
	[Da.21]	Axis to be interpolated No.2 QD77MS16		–	
	[Da.22]	Axis to be interpolated No.3 QD77MS16		–	

(Note): Refer to Section 5.3 "List of positioning data" for information on the setting details.

9.2.3 2-axis linear interpolation control

In "2-axis linear interpolation control" ("[Da.2] Control method" = ABS linear 2, INC linear 2), two motors are used to carry out position control in a linear path while carrying out interpolation for the axis directions set in each axis.
(Refer to Section 9.1.6 "Interpolation control" for details on interpolation control.)

[1] 2-axis linear interpolation control (ABS linear 2)

■ Operation chart

In absolute system 2-axis linear interpolation control, the designated 2 axes are used. Linear interpolation positioning is carried out from the current stop position (start point address) to the address (end point address) set in "[Da.6] Positioning address/movement amount".

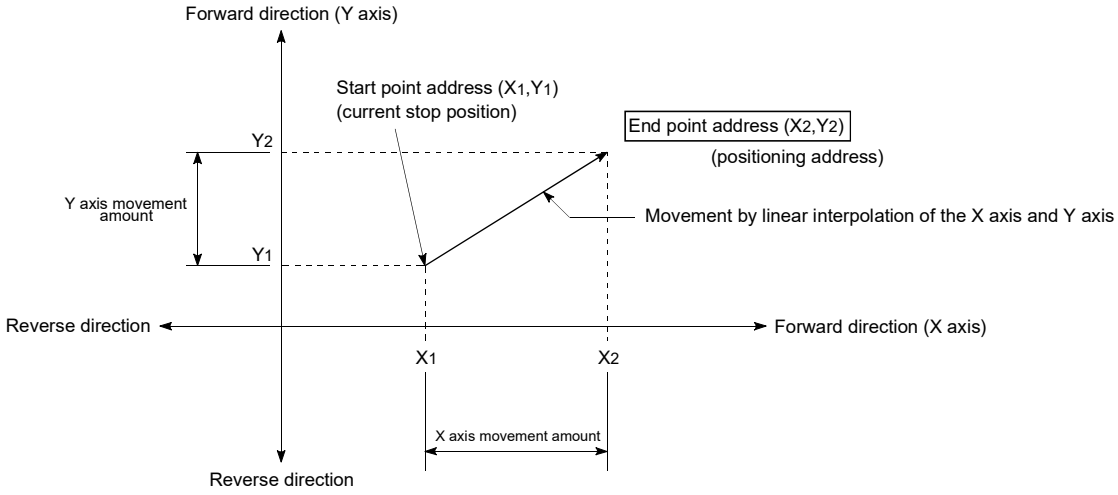

Example

When the start point address (current stop position) is (1000, 1000) and the end point address (positioning address) is (10000, 4000), positioning is carried out as follows.

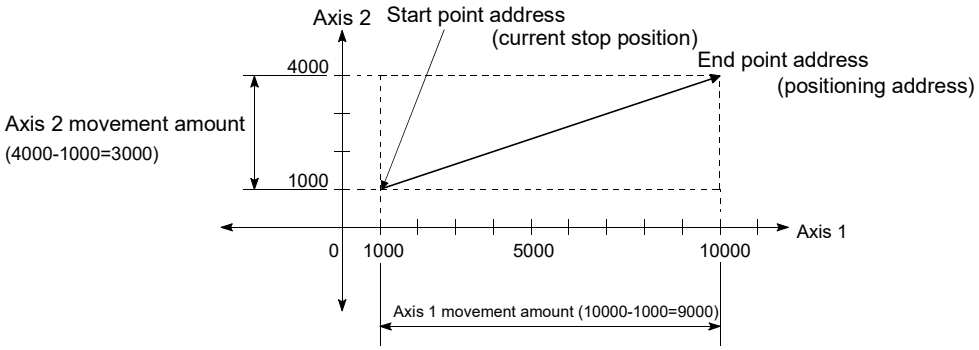

■ Restrictions

An error will occur and the positioning will not start in the following cases. The machine will immediately stop if the error is detected during a positioning control.

- If the movement amount of each axis exceeds "1073741824 (=2^{30})" when "0: Composite speed" is set in "[Pr.20] Interpolation speed designation method" The error "Outside linear movement amount range" (error code: 504) occurs at a positioning start.
  (The maximum movement amount that can be set in "[Da.6] Positioning address/movement amount" is "1073741824 (=2^{30})".)

■ Positioning data setting example

[When "2-axis linear interpolation control (ABS linear 2)" is set in positioning data No. 1 of axis 1]

- Reference axis..... Axis 1
- Interpolation axis..... Axis 2 (The required values are also set in positioning data No. 1 of axis 2.)

Setting item \ Axis			QD77MS2/QD77MS4 setting example		QD77MS16 setting example		Setting details
			Axis 1 (reference axis)	Axis 2 (interpolation axis)	Axis 1 (reference axis)	Axis 2 (interpolation axis)	
Axis 1 Positioning data No. 1	[Da.1]	Operation pattern	Positioning complete	–	Positioning complete	–	Set "Positioning complete" assuming the next positioning data will not be executed.
	[Da.2]	Control method	ABS linear 2	–	ABS linear 2	–	Set absolute system 2-axis linear interpolation control.
	[Da.3]	Acceleration time No.	1	–	1	–	Designate the value set in "[Pr.25] Acceleration time 1" as the acceleration time at start.
	[Da.4]	Deceleration time No.	0	–	0	–	Designate the value set in "[Pr.10] Deceleration time 0" as the deceleration time at deceleration.
	[Da.5]	Axis to be interpolated QD77MS2 QD77MS4	Axis 2	–			Set the axis to be interpolated (partner axis). If the self-axis is set, an error will occur.
	[Da.6]	Positioning address/ movement amount	10000.0 μm	4000.0 μm	10000.0 μm	4000.0 μm	Set the end point address. (Assuming "mm" is set in "[Pr.1] Unit setting".)
	[Da.7]	Arc address	–	–	–	–	Setting not required (setting value is ignored).
	[Da.8]	Command speed	6000.00 mm/min	–	6000.00 mm/min	–	Set the speed during movement to the end point address.
	[Da.9]	Dwell time/JUMP destination positioning data No.	500ms	–	500ms	–	Set the time the machine dwells after the positioning stop (command stop) to the output of the positioning complete signal.
	[Da.10]	M code/Condition data No./Number of LOOP to LEND repetitions	10	–	10	–	Set this when other sub operation commands are issued in combination with the No.1 positioning data.
	[Da.20]	Axis to be interpolated No.1 QD77MS16			Axis 2	–	Set the axis to be interpolated. If the self-axis is set, an error will occur.
	[Da.21]	Axis to be interpolated No.2 QD77MS16			–	–	Setting not required (setting value is ignored).
	[Da.22]	Axis to be interpolated No.3 QD77MS16			–	–	

(Note): Refer to Section 5.3 "List of positioning data" for information on the setting details.

POINT

- When the "reference axis speed" is set during 2-axis linear interpolation control, set so the major axis side becomes the reference axis. If the minor axis side is set as the reference axis, the major axis side speed may exceed the "[Pr.8] Speed limit value".

[2] 2-axis linear interpolation control (INC linear 2)

■ Operation chart

In incremental system 2-axis linear interpolation control, the designated 2 axes are used. Linear interpolation positioning is carried out from the current stop position (start point address) to a position at the end of the movement amount set in "[Da.6] Positioning address/movement amount". The movement direction is determined by the sign of the movement amount.

- Positive movement amount ..... Positioning control to forward direction (Address increase direction)
- Negative movement amount..... Positioning control to reverse direction (Address decrease direction)

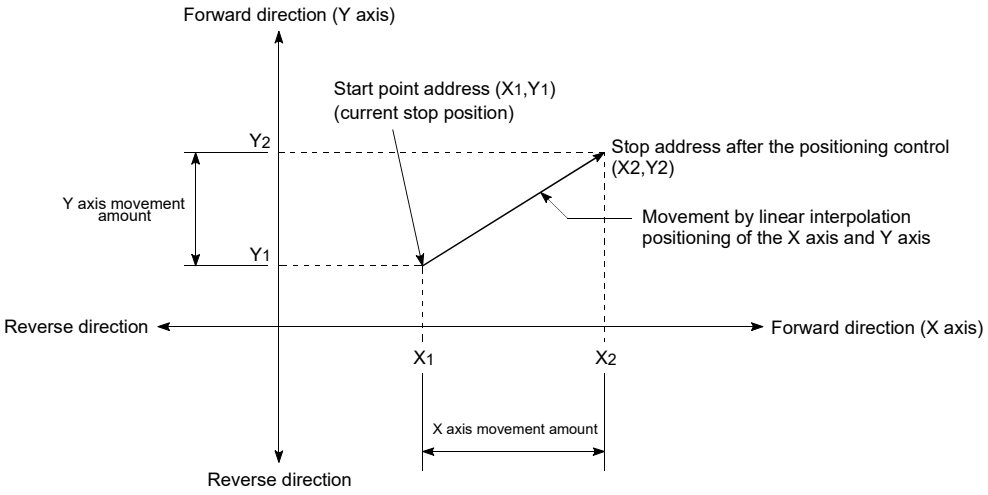

Example

When the axis 1 movement amount is 9000 and the axis 2 movement amount is -3000, positioning address (10000, 4000) is carried out as follows.

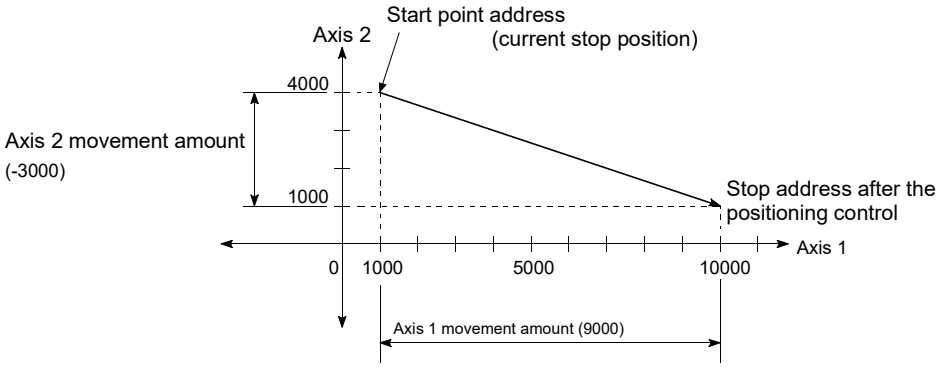

■ Restrictions

An error will occur and the positioning will not start in the following cases. The machine will immediately stop if the error is detected during a positioning operation.

- If the movement amount of each axis exceeds "1073741824 (=2^{30})" when "0: Composite speed" is set in "[Pr.20] Interpolation speed designation method" The error "Outside linear movement amount range" (error code: 504) occurs at a positioning start.
  (The maximum movement amount that can be set in "[Da.6] Positioning address/movement amount" is "1073741824 (=2^{30})".)

■ Positioning data setting example

[When "2-axis linear interpolation control (INC linear 2)" is set in positioning data No. 1 of axis 1]

- Reference axis..... Axis 1
- Interpolation axis..... Axis 2 (The required values are also set in positioning data No. 1 of axis 2.)

Setting item \ Axis			QD77MS2/QD77MS4 setting example		QD77MS16 setting example		Setting details
			Axis 1 (reference axis)	Axis 2 (interpolation axis)	Axis 1 (reference axis)	Axis 2 (interpolation axis)	
Axis 1 Positioning data No. 1	[Da.1]	Operation pattern	Positioning complete	–	Positioning complete	–	Set "Positioning complete" assuming the next positioning data will not be executed.
	[Da.2]	Control method	INC linear 2	–	INC linear 2	–	Set incremental system 2-axis linear interpolation control.
	[Da.3]	Acceleration time No.	1	–	1	–	Designate the value set in "[Pr.25] Acceleration time 1" as the acceleration time at start.
	[Da.4]	Deceleration time No.	0	–	0	–	Designate the value set in "[Pr.10] Deceleration time 0" as the deceleration time at deceleration.
	[Da.5]	Axis to be interpolated QD77MS2 QD77MS4	Axis 2	–			Set the axis to be interpolated (partner axis). If the self-axis is set, an error will occur.
	[Da.6]	Positioning address/ movement amount	9000.0 μm	-3000.0 μm	9000.0 μm	-3000.0 μm	Set the movement amount. (Assuming "mm" is set in "[Pr.1] Unit setting".)
	[Da.7]	Arc address	–	–	–	–	Setting not required (setting value is ignored).
	[Da.8]	Command speed	6000.00 mm/min	–	6000.00 mm/min	–	Set the speed during movement.
	[Da.9]	Dwell time/JUMP destination positioning data No.	500ms	–	500ms	–	Set the time the machine dwells after the positioning stop (command stop) to the output of the positioning complete signal.
	[Da.10]	M code/Condition data No./Number of LOOP to LEND repetitions	10	–	10	–	Set this when other sub operation commands are issued in combination with the No.1 positioning data.
	[Da.20]	Axis to be interpolated No.1 QD77MS16			Axis 2	–	Set the axis to be interpolated. If the self-axis is set, an error will occur.
	[Da.21]	Axis to be interpolated No.2 QD77MS16			–	–	Setting not required (setting value is ignored).
	[Da.22]	Axis to be interpolated No.3 QD77MS16			–	–	

(Note): Refer to Section 5.3 "List of positioning data" for information on the setting details.

POINT

- When the "reference axis speed" is set during 2-axis linear interpolation control, set so the major axis side becomes the reference axis. If the minor axis side is set as the reference axis, the major axis side speed may exceed the "[Pr.8] Speed limit value".

9.2.4 3-axis linear interpolation control

In "3-axis linear interpolation control" ("[Da.2] Control method" = ABS linear 3, INC linear 3), three motors are used to carry out position control in a linear path while carrying out interpolation for the axis directions set in each axis.
(Refer to Section 9.1.6 "Interpolation control" for details on interpolation control.)

[1] 3-axis linear interpolation control (ABS linear 3)

■ Operation chart

In the absolute system 3-axis linear interpolation control, the designated 3 axes are used. Linear interpolation positioning is carried out from the current stop position (start point address) to the address (end point address) set in the "[Da.6] Positioning address/movement amount".

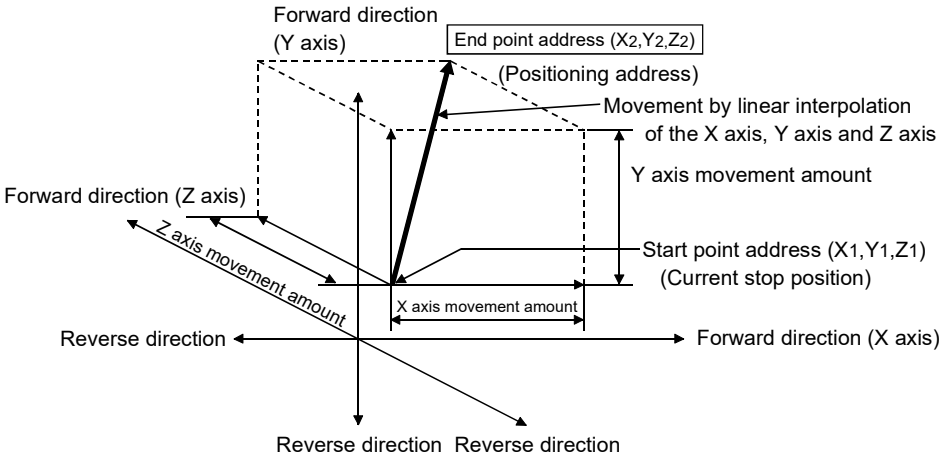

Example

When the start point address (current stop position) is (1000, 2000, 1000) and the end point address (positioning address) is (4000, 8000, 4000), positioning is carried out as follows.

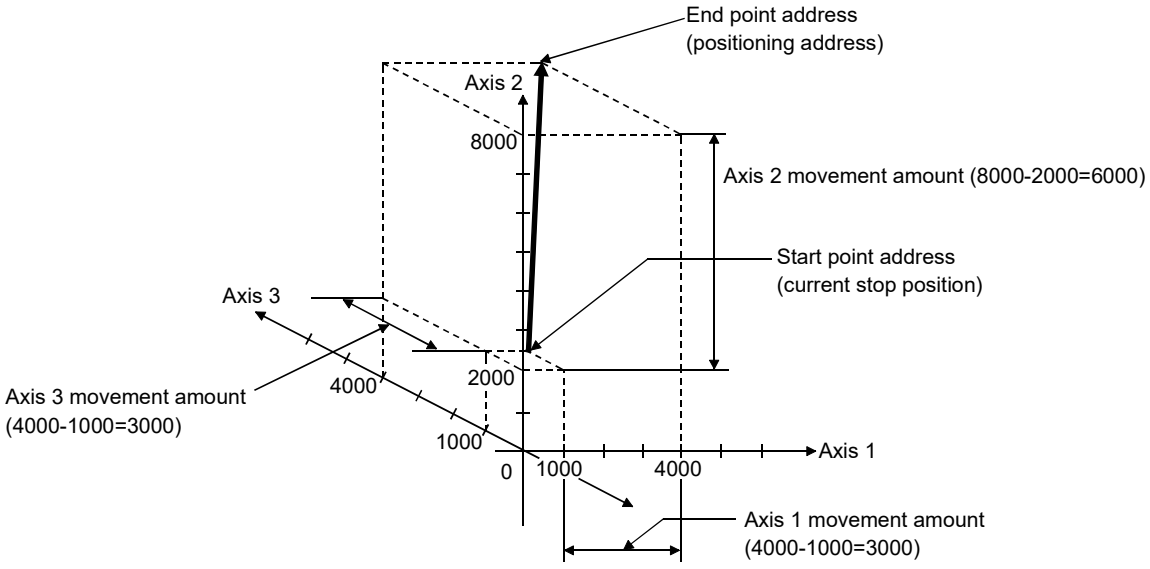

■ Restrictions

An error will occur and the positioning will not start in the following cases. The machine will immediately stop if the error is detected during a positioning control.

- If the movement amount of each axis exceeds "1073741824 (=2^{30})" when "0: Composite speed" is set in "[Pr.20] Interpolation speed designation method" The error "Outside linear movement amount range" (error code: 504) occurs at a positioning start.
  (The maximum movement amount that can be set in "[Da.6] Positioning address/movement amount" is "1073741824 (=2^{30})".)

■ Positioning data setting example

[When "3-axis linear interpolation control (ABS linear 3)" is set in positioning data No. 1 of axis 1]

- Reference axis..... Axis 1
- Interpolation axis..... Axis 2, Axis3 (The required values are also set in positioning data No. 1 of axis 2 and axis 3.)

Setting item			Axis	QD77MS4 setting example			QD77MS16 setting example			Setting details
				Axis 1 (reference axis)	Axis 2 (interpolation axis)	Axis 3 (interpolation axis)	Axis 1 (reference axis)	Axis 2 (interpolation axis)	Axis 3 (interpolation axis)	
Axis 1 Positioning data No. 1	[Da.1]	Operation pattern		Positioning complete	–	–	Positioning complete	–	–	Set "Positioning complete" assuming the next positioning data will not be executed.
	[Da.2]	Control method		ABS linear 3	–	–	ABS linear 3	–	–	Set absolute system 3-axis linear interpolation control.
	[Da.3]	Acceleration time No.		1	–	–	1	–	–	Designate the value set in "[Pr.25] Acceleration time 1" as the acceleration time at start.
	[Da.4]	Deceleration time No.		0	–	–	0	–	–	Designate the value set in "[Pr.10] Deceleration time 0" as the deceleration time at deceleration.
	[Da.5]	Axis to be interpolated QD77MS4		–	–	–				Setting not required (setting value is ignored). When axis 1 is used as a reference axis, the interpolation axes are axes 2 and 3.
	[Da.6]	Positioning address/ movement amount		4000.0 μm	8000.0 μm	4000.0 μm	4000.0 μm	8000.0 μm	4000.0 μm	Set the end point address. (Assuming "mm" is set in "[Pr.1] Unit setting".)
	[Da.7]	Arc address		–	–	–	–	–	–	Setting not required (setting value is ignored).
	[Da.8]	Command speed		6000.00 mm/min	–	–	6000.00 mm/min	–	–	Set the speed during movement to the end point address.
	[Da.9]	Dwell time/JUMP destination positioning data No.		500ms	–	–	500ms	–	–	Set the time the machine dwells after the positioning stop (command stop) to the output of the positioning complete signal.
	[Da.10]	M code/Condition data No./Number of LOOP to LEND repetitions		10	–	–	10	–	–	Set this when other sub operation commands are issued in combination with the No. 1 positioning data.
	[Da.20]	Axis to be interpolated No.1 QD77MS16					Axis 2	–	–	Set the axis to be interpolated. If the self-axis is set, an error will occur.
	[Da.21]	Axis to be interpolated No.2 QD77MS16					Axis 3	–	–	
	[Da.22]	Axis to be interpolated No.3 QD77MS16					–	–	–	Setting not required (setting value is ignored).

(Note): Refer to Section 5.3 "List of positioning data" for information on the setting details.

POINTS

- When the "reference axis speed" is set during 3-axis linear interpolation control, set so the major axis side becomes the reference axis. If the minor axis side is set as the reference axis, the major axis side speed may exceed the "[Pr.8] Speed limit value".
- Refer to Section 9.1.6 "Interpolation control" for the reference axis and interpolation axis combinations.

[2] 3-axis linear interpolation control (INC linear 3)

■ Operation chart

In the incremental system 3-axis linear interpolation control, the designated 3 axes are used. Linear interpolation positioning is carried out from the current stop position (start point address) to a position at the end of the movement amount set in the "[Da.6] Positioning address/movement amount". The movement direction is determined the sign of the movement amount.

- Positive movement amount ..... Positioning control to forward direction (Address increase direction)
- Negative movement amount..... Positioning control to reverse direction (Address decrease direction)

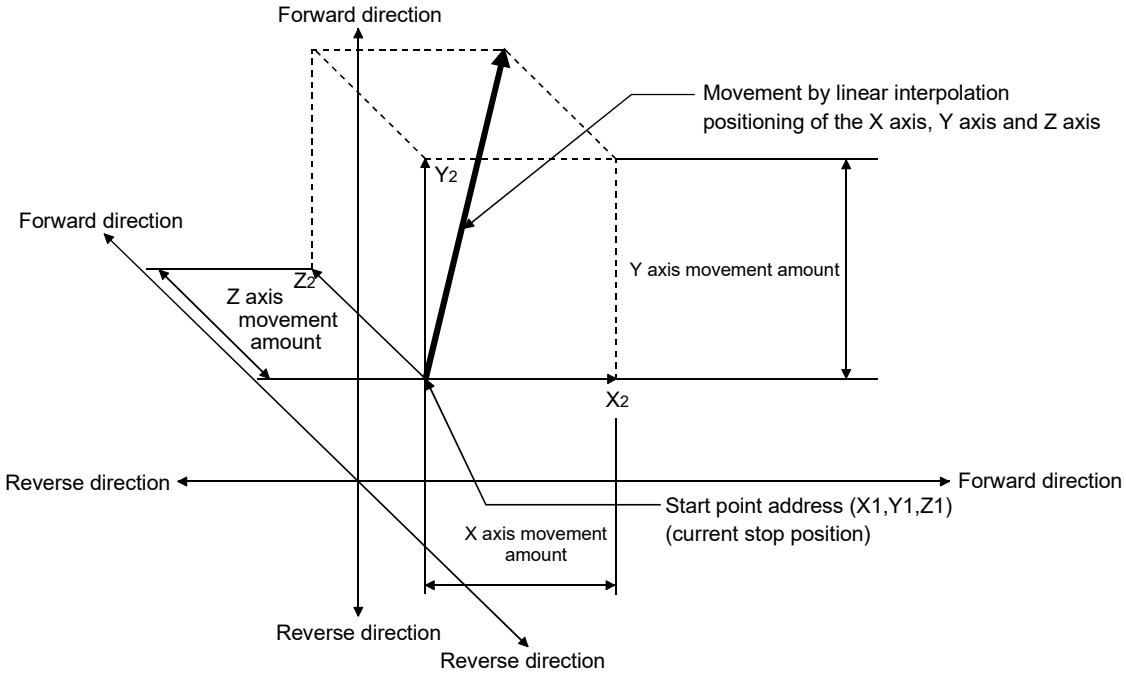

Example

When the axis 1 movement amount is 10000, the axis 2 movement amount is 5000 and the axis 3 movement amount is 6000, positioning is carried out as follows.

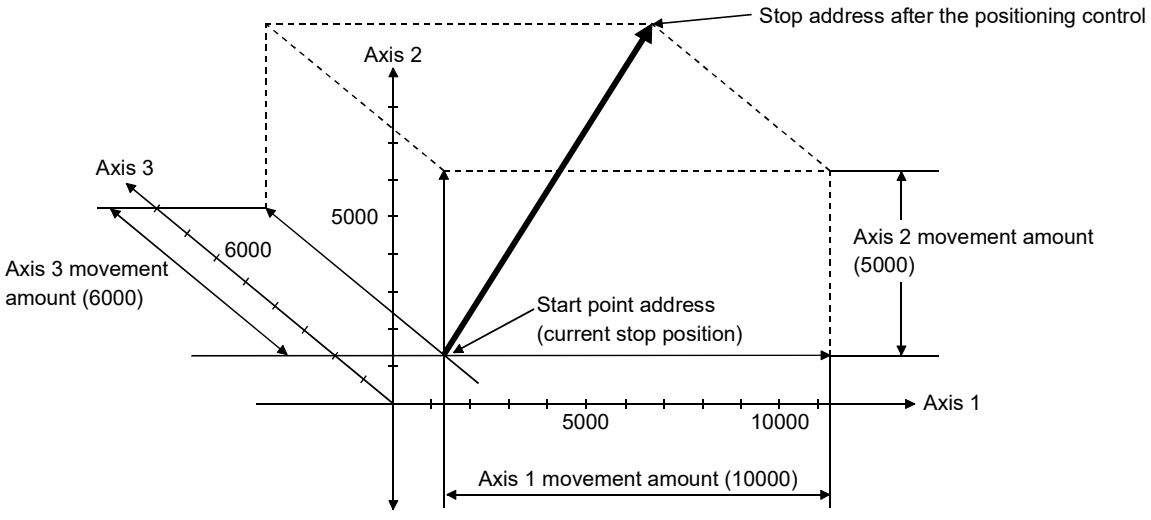

■ Restrictions

An error will occur and the positioning will not start in the following cases. The machine will immediately stop if the error is detected during a positioning operation.

- If the movement amount of each axis exceeds "1073741824 (=2^{30})" when "0: Composite speed" is set in "[Pr.20] Interpolation speed designation method"
  The error "Outside linear movement amount range" (error code: 504) occurs at a positioning start.
  (The maximum movement amount that can be set in "[Da.6] Positioning address/movement amount" is "1073741824 (=2^{30})".)

■ Positioning data setting example

[When "3-axis linear interpolation control (INC linear 3)" is set in positioning data No. 1 of axis 1]

- Reference axis..... Axis 1
- Interpolation axis..... Axis 2, Axis3 (The required values are also set in positioning data No. 1 of axis 2 and axis 3.)

Setting item			Axis	QD77MS4 setting example			QD77MS16 setting example			Setting details
				Axis 1 (reference axis)	Axis 2 (interpolation axis)	Axis 3 (interpolation axis)	Axis 1 (reference axis)	Axis 2 (interpolation axis)	Axis 3 (interpolation axis)	
Axis 1 Positioning data No. 1	[Da.1]	Operation pattern		Positioning complete	–	–	Positioning complete	–	–	Set "Positioning complete" assuming the next positioning data will not be executed.
	[Da.2]	Control method		INC linear 3	–	–	INC linear 3	–	–	Set incremental system 3-axis linear interpolation control.
	[Da.3]	Acceleration time No.		1	–	–	1	–	–	Designate the value set in "[Pr.25] Acceleration time 1" as the acceleration time at start.
	[Da.4]	Deceleration time No.		0	–	–	0	–	–	Designate the value set in "[Pr.10] Deceleration time 0" as the deceleration time at deceleration.
	[Da.5]	Axis to be interpolated QD77MS4		–	–	–				Setting not required (setting value is ignored). When axis 1 is used as a reference axis, the interpolation axes are axes 2 and 3.
	[Da.6]	Positioning address/ movement amount		10000.0 μm	5000.0 μm	6000.0 μm	10000.0 μm	5000.0 μm	6000.0 μm	Set the movement amount. (Assuming "mm" is set in "[Pr.1] Unit setting".)
	[Da.7]	Arc address		–	–	–	–	–	–	Setting not required (setting value is ignored).
	[Da.8]	Command speed		6000.00 mm/min	–	–	6000.00 mm/min	–	–	Set the speed during movement to the end point address.
	[Da.9]	Dwell time/JUMP destination positioning data No.		500ms	–	–	500ms	–	–	Set the time the machine dwells after the positioning stop (command stop) to the output of the positioning complete signal.
	[Da.10]	M code/Condition data No./Number of LOOP to LEND repetitions		10	–	–	10	–	–	Set this when other sub operation commands are issued in combination with the No. 1 positioning data.
	[Da.20]	Axis to be interpolated No.1 QD77MS16					Axis 2	–	–	Set the axis to be interpolated. If the self-axis is set, an error will occur.
	[Da.21]	Axis to be interpolated No.2 QD77MS16					Axis 3	–	–	
	[Da.22]	Axis to be interpolated No.3 QD77MS16					–	–	–	Setting not required (setting value is ignored).

(Note): Refer to Section 5.3 "List of positioning data" for information on the setting details.

POINTS

- When the "reference axis speed" is set during 3-axis linear interpolation control, set so the major axis side becomes the reference axis. If the minor axis side is set as the reference axis, the major axis side speed may exceed the "[Pr.8] Speed limit value".
- Refer to Section 9.1.6 "Interpolation control" for the reference axis and interpolation axis combinations.

9.2.5 4-axis linear interpolation control

In "4-axis linear interpolation control" ("[Da.2] Control method" = ABS linear 4, INC linear 4), four motors are used to carry out position control in a linear path while carrying out interpolation for the axis directions set in each axis.
(Refer to Section 9.1.6 "Interpolation control" for details on interpolation control.)

[1] 4-axis linear interpolation control (ABS linear 4)

In the absolute system 4-axis linear interpolation control, the designated 4 axes are used. Linear interpolation positioning is carried out from the current stop position (start point address) to the address (end point address) set in the "[Da.6] Positioning address/movement amount".

■ Positioning data setting example

[When "4-axis linear interpolation control (ABS linear 4)" is set in positioning data No. 1 of axis 1]

- Reference axis..... Axis 1
- Interpolation axis..... Axis 2, Axis3, Axis4 (The required values are also set in positioning data No. 1 of axis 2, axis 3 and axis 4.)

Setting item			Axis	QD77MS4 setting example				QD77MS16 setting example				Setting details
				Axis 1 (reference axis)	Axis 2 (interpolation axis)	Axis 3 (interpolation axis)	Axis 4 (interpolation axis)	Axis 1 (reference axis)	Axis 2 (interpolation axis)	Axis 3 (interpolation axis)	Axis 4 (interpolation axis)	
Axis 1 Positioning data No. 1	[Da.1]	Operation pattern		Positioning complete	–	–	–	Positioning complete	–	–	–	Set "Positioning complete" assuming the next positioning data will not be executed.
	[Da.2]	Control method		ABS linear 4	–	–	–	ABS linear 4	–	–	–	Set absolute system 4-axis linear interpolation control.
	[Da.3]	Acceleration time No.		1	–	–	–	1	–	–	–	Designate the value set in "[Pr.25] Acceleration time 1" as the acceleration time at start.
	[Da.4]	Deceleration time No.		0	–	–	–	0	–	–	–	Designate the value set in "[Pr.10] Deceleration time 0" as the deceleration time at deceleration.
	[Da.5]	Axis to be interpolated QD77MS4		–	–	–	–					Setting not required (setting value is ignored). When axis 1 is used as a reference axis, the interpolation axes are axes 2, 3 and 4.
	[Da.6]	Positioning address/ movement amount		4000.0 μm	8000.0 μm	4000.0 μm	3000.0 μm	4000.0 μm	8000.0 μm	4000.0 μm	3000.0 μm	Set the end point address. (Assuming "mm" is set in "[Pr.1] Unit setting".)
	[Da.7]	Arc address		–	–	–	–	–	–	–	–	Setting not required (setting value is ignored).
	[Da.8]	Command speed		6000.00 mm/min	–	–	–	6000.00 mm/min	–	–	–	Set the speed during movement to the end point address.
	[Da.9]	Dwell time/JUMP destination positioning data No.		500ms	–	–	–	500ms	–	–	–	Set the time the machine dwells after the positioning stop (command stop) to the output of the positioning complete signal.
	[Da.10]	M code/Condition data No./Number of LOOP to LEND repetitions		10	–	–	–	10	–	–	–	Set this when other sub operation commands are issued in combination with the No. 1 positioning data.
	[Da.20]	Axis to be interpolated No.1 QD77MS16						Axis 2	–	–	–	Set the axis to be interpolated. If the self-axis is set, an error will occur.
	[Da.21]	Axis to be interpolated No.2 QD77MS16						Axis 3	–	–	–	
	[Da.22]	Axis to be interpolated No.3 QD77MS16						Axis 4	–	–	–	

(Note): Refer to Section 5.3 "List of positioning data" for information on the setting details.

POINTS

- When the "reference axis speed" is set during 4-axis linear interpolation control, set so the major axis side becomes the reference axis. If the minor axis side is set as the reference axis, the major axis side speed may exceed the "[Pr.8] Speed limit value".
- Refer to Section 9.1.6 "Interpolation control" for the reference axis and interpolation axis combinations.

[2] 4-axis linear interpolation control (INC linear 4)

In the incremental system 4-axis linear interpolation control, the designated 4 axes are used. Linear interpolation positioning is carried out from the current stop position (start point address) to a position at the end of the movement amount set in the "[Da.6] Positioning address/movement amount". The movement direction is determined by the sign of the movement amount.

■ Restrictions

An error will occur and the positioning will not start in the following cases. The machine will immediately stop if the error is detected during a positioning operation.

- When the movement amount for each axis exceeds "1073741824 ($=2^{30}$)"
  The error "Outside linear movement amount range" (error code: 504) will occur at the positioning start.
  (The maximum movement amount that can be set in "[Da.6] Positioning address/ movement amount" is "1073741824 ($=2^{30}$)".)

■ Positioning data setting example

[When "4-axis linear interpolation control (INC linear 4)" is set in positioning data No. 1 of axis 1]

- Reference axis..... Axis 1
- Interpolation axis..... Axis 2, Axis3, Axis4 (The required values are also set in positioning data No. 1 of axis 2, axis 3 and axis 4.)

Setting item			Axis	QD77MS4 setting example				QD77MS16 setting example				Setting details
				Axis 1 (reference axis)	Axis 2 (interpolation axis)	Axis 3 (interpolation axis)	Axis 4 (interpolation axis)	Axis 1 (reference axis)	Axis 2 (interpolation axis)	Axis 3 (interpolation axis)	Axis 4 (interpolation axis)	
Axis 1 Positioning data No. 1	[Da.1]	Operation pattern		Positioning complete	–	–	–	Positioning complete	–	–	–	Set "Positioning complete" assuming the next positioning data will not be executed.
	[Da.2]	Control method		INC linear 4	–	–	–	INC linear 4	–	–	–	Set incremental system 4-axis linear interpolation control.
	[Da.3]	Acceleration time No.		1	–	–	–	1	–	–	–	Designate the value set in "[Pr.25] Acceleration time 1" as the acceleration time at start.
	[Da.4]	Deceleration time No.		0	–	–	–	0	–	–	–	Designate the value set in "[Pr.10] Deceleration time 0" as the deceleration time at deceleration.
	[Da.5]	Axis to be interpolated QD77MS4		–	–	–	–					Setting not required (setting value is ignored). When axis 1 is used as a reference axis, the interpolation axes are axes 2, 3 and 4.
	[Da.6]	Positioning address/ movement amount		4000.0 μm	8000.0 μm	4000.0 μm	3000.0 μm	4000.0 μm	8000.0 μm	4000.0 μm	3000.0 μm	Set the movement amount. (Assuming "mm" is set in "[Pr.1] Unit setting".)
	[Da.7]	Arc address		–	–	–	–	–	–	–	–	Setting not required (setting value is ignored).
	[Da.8]	Command speed		6000.00 mm/min	–	–	–	6000.00 mm/min	–	–	–	Set the speed during movement.
	[Da.9]	Dwell time/JUMP destination positioning data No.		500ms	–	–	–	500ms	–	–	–	Set the time the machine dwells after the positioning stop (command stop) to the output of the positioning complete signal.
	[Da.10]	M code/Condition data No./Number of LOOP to LEND repetitions		10	–	–	–	10	–	–	–	Set this when other sub operation commands are issued in combination with the No. 1 positioning data.
	[Da.20]	Axis to be interpolated No.1 QD77MS16						Axis 2	–	–	–	Set the axis to be interpolated. If the self-axis is set, an error will occur.
	[Da.21]	Axis to be interpolated No.2 QD77MS16						Axis 3	–	–	–	
	[Da.22]	Axis to be interpolated No.3 QD77MS16						Axis 4	–	–	–	

(Note): Refer to Section 5.3 "List of positioning data" for information on the setting details.

POINT

- When the "reference axis speed" is set during 4-axis linear interpolation control, set so the major axis side becomes the reference axis. If the minor axis side is set as the reference axis, the major axis side speed may exceed the "[Pr.8] Speed limit value".
- Refer to Section 9.1.6 "Interpolation control" for the reference axis and interpolation axis combinations.

9.2.6 1-axis fixed-feed control

In "1-axis fixed-feed control" ("[Da.2] Control method" = fixed-feed 1), one motor is used to carry out fixed-feed control in a set axis direction.
In fixed-feed control, any remainder of below control accuracy is rounded down to convert the movement amount designated in the positioning data into the command value to servo amplifier.

■ Operation chart

In 1-axis fixed-feed control, the address ([Md.20] Command position value) of the current stop position (start point address) is set to "0". Positioning is then carried out to a position at the end of the movement amount set in "[Da.6] Positioning address/
movement amount".
The movement direction is determined by the movement amount sign.

- Positive movement amount ..... Positioning control to forward direction (Address increase direction)
- Negative movement amount..... Positioning control to reverse direction (Address decrease direction)

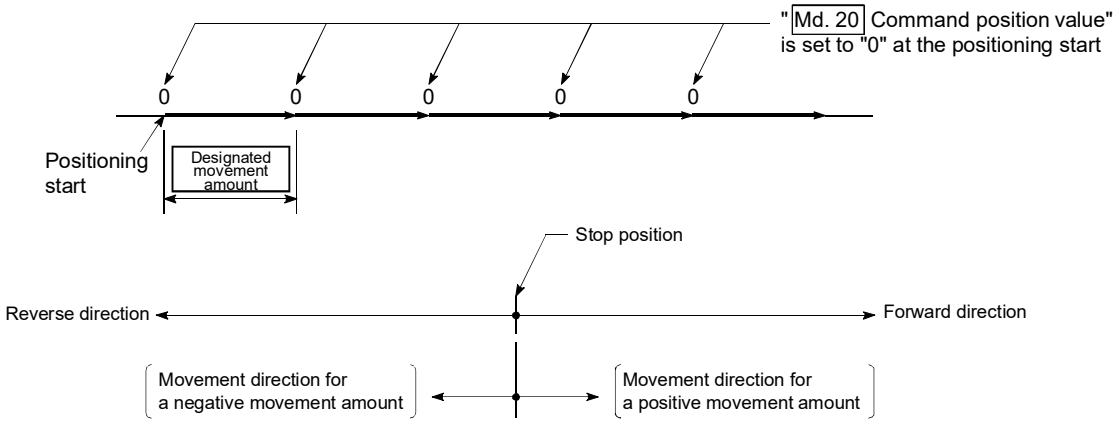

■ Restrictions

(1) The error "Continuous path control not possible" (error code: 516) will occur and the operation cannot start if "continuous path control" is set in "[Da.1] Operation pattern". ("Continuous path control" cannot be set in fixed-feed control.)

(2) "Fixed-feed" cannot be set in "[Da.2] Control method" in the positioning data when "continuous path control" has been set in "[Da.1] Operation pattern" of the immediately prior positioning data. (For example, if the operation pattern of positioning data No. 1 is "continuous path control", fixed-feed control cannot be set in positioning data No. 2.) The error "Continuous path control not possible" (error code: 516) will occur and the machine will carry out a deceleration stop if this type of setting is carried out.

POINT

- When the movement amount is converted to the actual number of command pulses, a fraction appears after the decimal point, according to the movement amount per pulse. This fraction is normally retained in the Simple Motion module and reflected at the next positioning.
  For the fixed-feed control, since the movement distance is maintained constant (= the command number of pulses is maintained constant), the control is carried out after the fraction pulse is cleared to zero at start.

[Accumulation/cutoff for fractional pulses]

When movement amount per pulse is 1.0 [μm] and movement for 2.5 [μm] is executed two times.

→ Conversion to command pulses: 2.5 [μm] ÷ 1.0 = 2.5 [PLS]

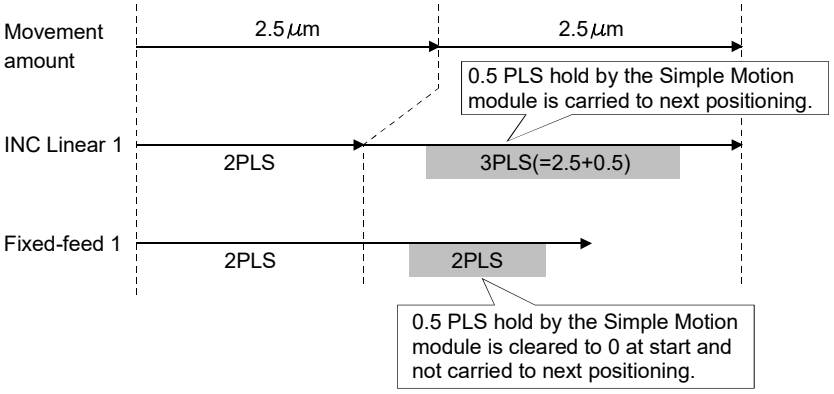

■ Positioning data setting example

[When "1-axis fixed-feed control (fixed-feed 1)" is set in positioning data No.1 of axis 1]

Setting item			Setting example		Setting details
			QD77MS2 QD77MS4	QD77MS16	
Axis 1 Positioning data No. 1	[Da.1]	Operation pattern	Positioning complete		Set "Positioning complete" assuming the next positioning data will not be executed.
	[Da.2]	Control method	Fixed-feed 1		Set 1-axis fixed-feed control.
	[Da.3]	Acceleration time No.	1		Designate the value set in "[Pr.25] Acceleration time 1" as the acceleration time at start.
	[Da.4]	Deceleration time No.	0		Designate the value set in "[Pr.10] Deceleration time 0" as the deceleration time at deceleration.
	[Da.5]	Axis to be interpolated QD77MS2 QD77MS4	–		Setting not required (setting value is ignored).
	[Da.6]	Positioning address/ movement amount	8000.0μm		Set the positioning address. (Assuming "mm" is set in "[Pr.1] Unit setting".)
	[Da.7]	Arc address	–		Setting not required (setting value is ignored).
	[Da.8]	Command speed	6000.00mm/min		Set the speed during movement to the positioning address.
	[Da.9]	Dwell time /JUMP destination positioning data No.	500ms		Set the time the machine dwells after the positioning stop (command stop) to the output of the positioning complete signal.
	[Da.10]	M code /Condition data No./Number of LOOP to LEND repetitions	10		Set this when other sub operation commands are issued in combination with the No. 1 positioning data.
	[Da.20]	Axis to be interpolated No.1 QD77MS16		–	Setting not required (setting value is ignored).
	[Da.21]	Axis to be interpolated No.2 QD77MS16		–	
	[Da.22]	Axis to be interpolated No.3 QD77MS16		–	

(Note): Refer to Section 5.3 "List of positioning data" for information on the setting details.

9.2.7 2-axis fixed-feed control (interpolation)

In "2-axis fixed-feed control" ("[Da.2] Control method" = fixed-feed 2), two motors are used to carry out fixed-feed control in a linear path while carrying out interpolation for the axis directions set in each axis.
In fixed-feed control, any remainder of below control accuracy is rounded down to convert the movement amount designated in the positioning data into the command value to servo amplifier.
(Refer to Section 9.1.6 "Interpolation control" for details on interpolation control.)

■ Operation chart

In incremental system 2-axis fixed-feed control, the addresses ([Md.20] Command position value) of the current stop position (start addresses) of both axes are set to "0". Linear interpolation positioning is then carried out from that position to a position at the end of the movement amount set in "[Da.6] Positioning address/movement amount". The movement direction is determined by the sign of the movement amount.

- Positive movement amount ..... Positioning control to forward direction (Address increase direction)
- Negative movement amount..... Positioning control to reverse direction (Address decrease direction)

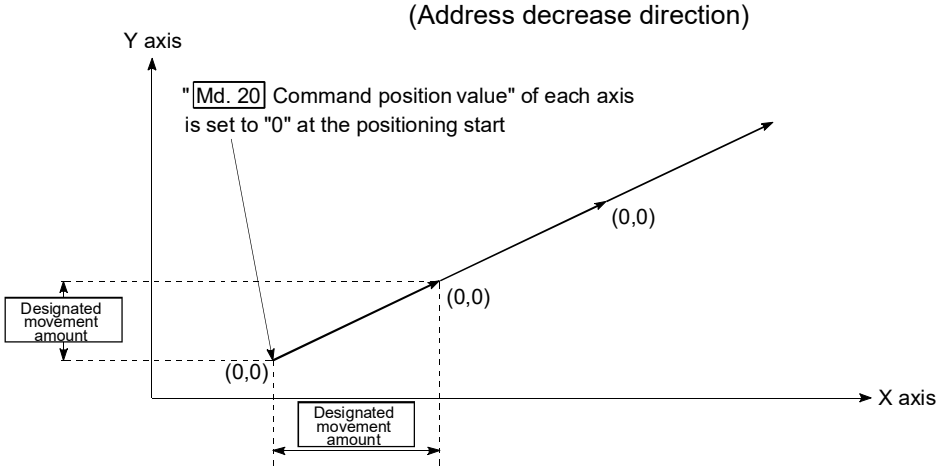

■ Restrictions

(1) The error "Continuous path control not possible" (error code: 516) will occur and the operation cannot start if "continuous path control" is set in "[Da.1] Operation pattern". ("Continuous path control" cannot be set in fixed-feed control.)
(2) If the movement amount of each axis exceeds "1073741824 ($=2^{30}$)" when "0: Composite speed" is set in "[Pr.20] Interpolation speed designation method", the error "Outside linear movement amount range" (error code: 504) occurs at a positioning start and positioning cannot be started. (The maximum movement amount that can be set in "[Da.6] Positioning address/movement amount" is "1073741824 ($= 2^{30}$)".
(3) "Fixed-feed" cannot be set in "[Da.2] Control method" in the positioning data when "continuous path control" has been set in "[Da.1] Operation pattern" of the immediately prior positioning data. (For example, if the operation pattern of positioning data No. 1 is "continuous path control", fixed-feed control cannot be set in positioning data No. 2.) The error "Continuous path control not possible" (error code: 516) will occur and the machine will carry out a deceleration stop if this type of setting is carried out.

■ Positioning data setting example

[When "2-axis fixed-feed control (fixed-feed 2)" is set in positioning data No. 1 of axis 1]

• Reference axis..... Axis 1

• Interpolation axis..... Axis 2 (The required values are also set in positioning data No. 1 of axis 2.)

Setting item \ Axis			QD77MS2/QD77MS4 setting example		QD77MS16 setting example		Setting details
			Axis 1 (reference axis)	Axis 2 (interpolation axis)	Axis 1 (reference axis)	Axis 2 (interpolation axis)	
Axis 1 Positioning data No. 1	[Da.1]	Operation pattern	Positioning complete	–	Positioning complete	–	Set "Positioning complete" assuming the next positioning data will not be executed.
	[Da.2]	Control method	Fixed-feed 2	–	Fixed-feed 2	–	Set 2-axis fixed-feed control.
	[Da.3]	Acceleration time No.	1	–	1	–	Designate the value set in "[Pr.25] Acceleration time 1" as the acceleration time at start.
	[Da.4]	Deceleration time No.	0	–	0	–	Designate the value set in "[Pr.10] Deceleration time 0" as the deceleration time at deceleration.
	[Da.5]	Axis to be interpolated QD77MS2 QD77MS4	Axis 2	–			Set the axis to be interpolated (partner axis). If the self-axis is set, an error will occur.
	[Da.6]	Positioning address/ movement amount	8000.0 μm	6000.0 μm	8000.0 μm	6000.0 μm	Set the positioning address. (Assuming "mm" is set in "[Pr.1] Unit setting".)
	[Da.7]	Arc address	–	–	–	–	Setting not required (setting value is ignored).
	[Da.8]	Command speed	6000.00 mm/min	–	6000.00 mm/min	–	Set the speed during movement. (Designate the composite speed of reference axis speed in "[Pr.20] Interpolation speed designation method".)
	[Da.9]	Dwell time/JUMP destination positioning data No.	500ms	–	500ms	–	Set the time the machine dwells after the positioning stop (command stop) to the output of the positioning complete signal.
	[Da.10]	M code/Condition data No./Number of LOOP to LEND repetitions	10	–	10	–	Set this when other sub operation commands are issued in combination with the No. 1 positioning data.
	[Da.20]	Axis to be interpolated No.1 QD77MS16			Axis 2	–	Set the axis to be interpolated. If the self-axis is set, an error will occur.
	[Da.21]	Axis to be interpolated No.2 QD77MS16			–	–	Setting not required (setting value is ignored).
	[Da.22]	Axis to be interpolated No.3 QD77MS16			–	–	

(Note): Refer to Section 5.3 "List of positioning data" for information on the setting details.

POINTS

- When the movement amount is converted to the actual number of command pulses, a fraction appears after the decimal point, according to the movement amount per pulse. This fraction is normally retained in the Simple Motion module and reflected at the next positioning.
  For the fixed-feed control, since the movement distance is maintained constant (= the command number of pulses is maintained constant), the control is carried out after the fraction pulse is cleared to zero at start.

  [Accumulation/cutoff for fractional pulses]

  When movement amount per pulse is 1.0 [μm] and movement for 2.5 [μm] is executed two times.

  → Conversion to command pulses: 2.5 [μm] ÷ 1.0 = 2.5 [PLS]

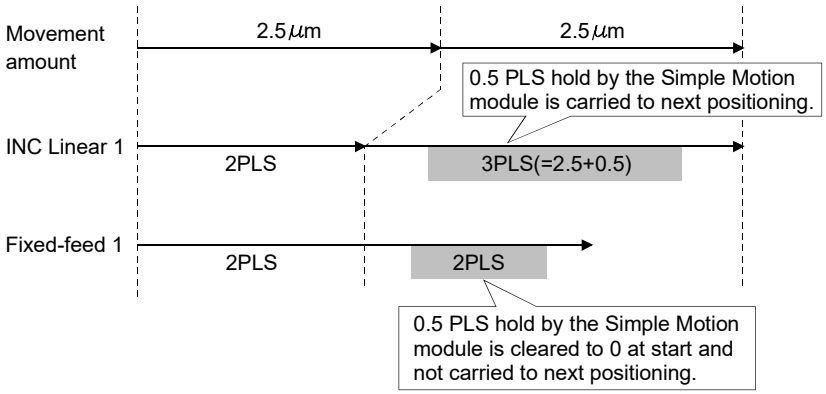

- When the "reference axis speed" is set during 2-axis fixed-feed control, set so the major axis side becomes the reference axis. If the minor axis side is set as the reference axis, the major axis side speed may exceed the "[Pr.8] Speed limit value".

9.2.8 3-axis fixed-feed control (interpolation)

In "3-axis fixed-feed control" ("[Da.2] Control method" = fixed-feed 3), three motors are used to carry out fixed-feed control in a linear path while carrying out interpolation for the axis directions set in each axis.
In fixed-feed control, any remainder of below control accuracy is rounded down to convert the movement amount designated in the positioning data into the command value to servo amplifier.
(Refer to Section 9.1.6 "Interpolation control" for details on interpolation control.)

■ Operation chart

In incremental system 3-axis fixed-feed control, the addresses ([Md.20] Command position value) of the current stop position (start addresses) of every axes are set to "0". Linear interpolation positioning is then carried out from that position to a position at the end of the movement amount set in "[Da.6] Positioning address/movement amount". The movement direction is determined by the sign of the movement amount.

- Positive movement amount ..... Positioning control to forward direction (Address increase direction)
- Negative movement amount..... Positioning control to reverse direction (Address decrease direction)

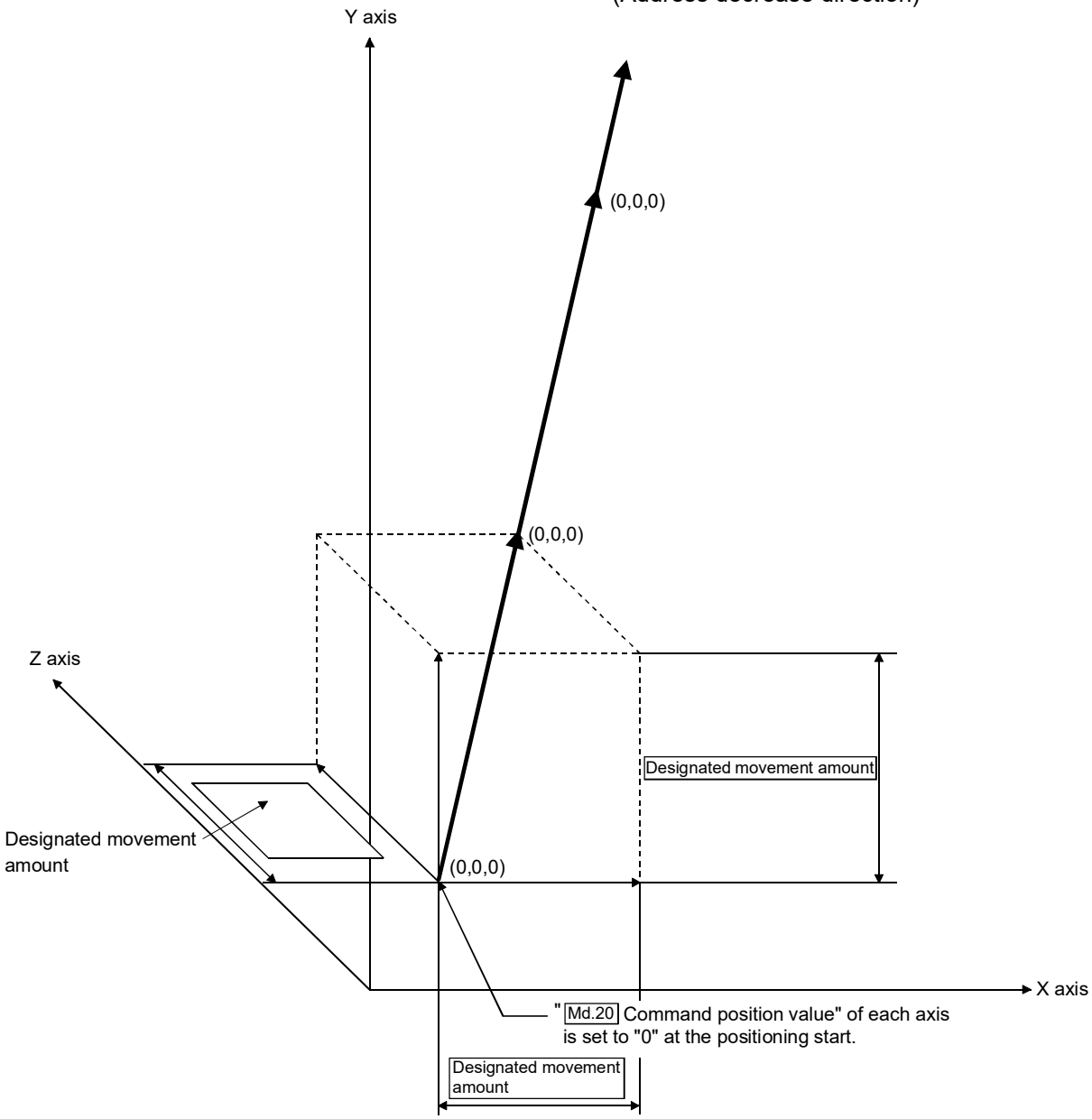

■ Restrictions

(1) The error "Continuous path control not possible" (error code: 516) will occur and the operation cannot start if "continuous path control" is set in "[Da.1] Operation pattern". ("Continuous path control" cannot be set in fixed-feed control.)

(2) If the movement amount of each axis exceeds "1073741824 ($=2^{30}$)" when "0: Composite speed" is set in "[Pr.20] Interpolation speed designation method", the error "Outside linear movement amount range" (error code: 504) occurs at a positioning start and positioning cannot be started. (The maximum movement amount that can be set in "[Da.6] Positioning address/movement amount" is "1073741824 ($= 2^{30}$)".

(3) "Fixed-feed" cannot be set in "[Da.2] Control method" in the positioning data when "continuous path control" has been set in "[Da.1] Operation pattern" of the immediately prior positioning data. (For example, if the operation pattern of positioning data No. 1 is "continuous path control", fixed-feed control cannot be set in positioning data No. 2.) The error "Continuous path control not possible" (error code: 516) will occur and the machine will carry out a deceleration stop if this type of setting is carried out.

■ Positioning data setting example

[When "3-axis fixed-feed control (fixed-feed 3)" is set in positioning data No. 1 of axis 1]

- Reference axis..... Axis 1
- Interpolation axis..... Axis 2, Axis3 (The required values are also set in positioning data No. 1 of axis 2 and axis 3.)

Setting item \ Axis			QD77MS4 setting example			QD77MS16 setting example			Setting details
			Axis 1 (reference axis)	Axis 2 (interpolation axis)	Axis 3 (interpolation axis)	Axis 1 (reference axis)	Axis 2 (interpolation axis)	Axis 3 (interpolation axis)	
Axis 1 Positioning data No. 1	[Da.1]	Operation pattern	Positioning complete	–	–	Positioning complete	–	–	Set "Positioning complete" assuming the next positioning data will not be executed.
	[Da.2]	Control method	Fixed-feed 3	–	–	Fixed-feed 3	–	–	Set 3-axis fixed-feed control.
	[Da.3]	Acceleration time No.	1	–	–	1	–	–	Designate the value set in "[Pr.25] Acceleration time 1" as the acceleration time at start.
	[Da.4]	Deceleration time No.	0	–	–	0	–	–	Designate the value set in "[Pr.10] Deceleration time 0" as the deceleration time at deceleration.
	[Da.5]	Axis to be interpolated QD77MS4	–	–	–				Setting not required (setting value is ignored). When axis 1 is used as a reference axis, the interpolation axes are axes 2 and 3.
	[Da.6]	Positioning address/ movement amount	10000.0 μm	5000.0 μm	6000.0 μm	10000.0 μm	5000.0 μm	6000.0 μm	Set the positioning address. (Assuming "mm" is set in "[Pr.1] Unit setting".)
	[Da.7]	Arc address	–	–	–	–	–	–	Setting not required (setting value is ignored).
	[Da.8]	Command speed	6000.00 mm/min	–	–	6000.00 mm/min	–	–	Set the speed during movement.
	[Da.9]	Dwell time/JUMP destination positioning data No.	500ms	–	–	500ms	–	–	Set the time the machine dwells after the positioning stop (command stop) to the output of the positioning complete signal.
	[Da.10]	M code/Condition data No./Number of LOOP to LEND repetitions	10	–	–	10	–	–	Set this when other sub operation commands are issued in combination with the No. 1 positioning data.
	[Da.20]	Axis to be interpolated No.1 QD77MS16				Axis 2	–	–	Set the axis to be interpolated. If the self-axis is set, an error will occur.
	[Da.21]	Axis to be interpolated No.2 QD77MS16				Axis 3	–	–	
	[Da.22]	Axis to be interpolated No.3 QD77MS16				–	–	–	Setting not required (setting value is ignored).

(Note): Refer to Section 5.3 "List of positioning data" for information on the setting details.

POINTS

- When the movement amount is converted to the actual number of command pulses, a fraction appears after the decimal point, according to the movement amount per pulse. This fraction is normally retained in the Simple Motion module and reflected at the next positioning.
  For the fixed-feed control, since the movement distance is maintained constant (= the command number of pulses is maintained constant), the control is carried out after the fraction pulse is cleared to zero at start.

  [Accumulation/cutoff for fractional pulses]

  When movement amount per pulse is 1.0 [μm] and movement for 2.5 [μm] is executed two times.

  → Conversion to command pulses: 2.5 [μm] ÷ 1.0 = 2.5 [PLS]

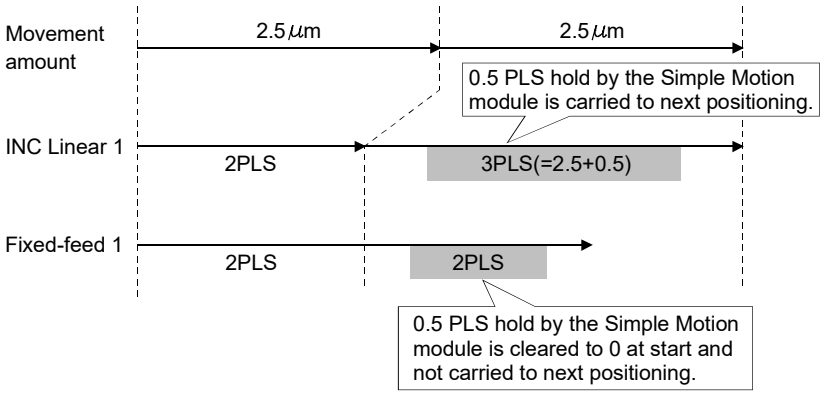

- When the "reference axis speed" is set during 3-axis fixed-feed control, set so the major axis side becomes the reference axis. If the minor axis side is set as the reference axis, the major axis side speed may exceed the "[Pr.8] Speed limit value".
- Refer to Section 9.1.6 "Interpolation control" for the reference axis and interpolation axis combinations.

9.2.9 4-axis fixed-feed control (interpolation)

In "4-axis fixed-feed control" ("[Da.2] Control method" = fixed-feed 4), four motors are used to carry out fixed-feed control in a linear path while carrying out interpolation for the axis directions set in each axis.

In fixed-feed control, any remainder of below control accuracy is rounded down to convert the movement amount designated in the positioning data into the command value to servo amplifier.

(Refer to Section 9.1.6 "Interpolation control" for details on interpolation control.)

■ Operation chart

In incremental system 4-axis fixed-feed control, the addresses ([Md.20] Command position value) of the current stop position (start addresses) of every axes are set to "0". Linear interpolation positioning is then carried out from that position to a position at the end of the movement amount set in "[Da.6] Positioning address/movement amount". The movement direction is determined by the sign of the movement amount.

- Positive movement amount ..... Positioning control to forward direction (Address increase direction)
- Negative movement amount..... Positioning control to reverse direction (Address decrease direction)

■ Restrictions

(1) The error "Continuous path control not possible" (error code: 516) will occur and the operation cannot start if "continuous path control" is set in "[Da.1] Operation pattern". ("Continuous path control" cannot be set in fixed-feed control.)

(2) "Fixed-feed" cannot be set in "[Da.2] Control method" in the positioning data when "continuous path control" has been set in "[Da.1] Operation pattern" of the immediately prior positioning data. (For example, if the operation pattern of positioning data No. 1 is "continuous path control", fixed-feed control cannot be set in positioning data No. 2.) The error "Continuous path control not possible" (error code: 516) will occur and the machine will carry out a deceleration stop if this type of setting is carried out.

(3) Set "1: Reference axis speed" in "[Pr.20] Interpolation speed designation method". The error "Interpolation mode error" (error code: 523) will occur and the operation cannot start if "0: Composite speed" is set.

■ Positioning data setting example

[When "4-axis fixed-feed control (fixed-feed 4)" is set in positioning data No.1 of axis 1]

- Reference axis..... Axis 1
- Interpolation axis..... Axis 2, Axis3, Axis4 (The required values are also set in positioning data No. 1 of axis 2, axis 3 and axis 4.)

Setting item			Axis	QD77MS4 setting example				QD77MS16 setting example				Setting details
				Axis 1 (reference axis)	Axis 2 (interpolation axis)	Axis 3 (interpolation axis)	Axis 4 (interpolation axis)	Axis 1 (reference axis)	Axis 2 (interpolation axis)	Axis 3 (interpolation axis)	Axis 4 (interpolation axis)	
Axis 1 Positioning data No. 1	[Da.1]	Operation pattern		Positioning complete	–	–	–	Positioning complete	–	–	–	Set "Positioning complete" assuming the next positioning data will not be executed.
	[Da.2]	Control method		Fixed-feed 4	–	–	–	Fixed-feed 4	–	–	–	Set 4-axis fixed-feed control.
	[Da.3]	Acceleration time No.		1	–	–	–	1	–	–	–	Designate the value set in "[Pr.25] Acceleration time 1" as the acceleration time at start.
	[Da.4]	Deceleration time No.		0	–	–	–	0	–	–	–	Designate the value set in "[Pr.10] Deceleration time 0" as the deceleration time at deceleration.
	[Da.5]	Axis to be interpolated QD77MS4		–	–	–	–					Setting not required (setting value is ignored). When axis 1 is used as a reference axis, the interpolation axes are axes 2, 3 and 4.
	[Da.6]	Positioning address/ movement amount		4000.0 μm	8000.0 μm	4000.0 μm	3000.0 μm	4000.0 μm	8000.0 μm	4000.0 μm	3000.0 μm	Set the positioning address. (Assuming "mm" is set in "[Pr.1] Unit setting ".)
	[Da.7]	Arc address		–	–	–	–	–	–	–	–	Setting not required (setting value is ignored).
	[Da.8]	Command speed		6000.00 mm/min	–	–	–	6000.00 mm/min	–	–	–	Set the speed during movement.
	[Da.9]	Dwell time/JUMP destination positioning data No.		500ms	–	–	–	500ms	–	–	–	Set the time the machine dwells after the positioning stop (command stop) to the output of the positioning complete signal.
	[Da.10]	M code/Condition data No./Number of LOOP to LEND repetitions		10	–	–	–	10	–	–	–	Set this when other sub operation commands are issued in combination with the No. 1 positioning data.
	[Da.20]	Axis to be interpolated No.1 QD77MS16						Axis 2	–	–	–	Set the axis to be interpolated. If the self-axis is set, an error will occur.
	[Da.21]	Axis to be interpolated No.2 QD77MS16						Axis 3	–	–	–	
	[Da.22]	Axis to be interpolated No.3 QD77MS16						Axis 4	–	–	–	

(Note): Refer to Section 5.3 "List of positioning data" for information on the setting details.

POINTS

- When the movement amount is converted to the actual number of command pulses, a fraction appears after the decimal point, according to the movement amount per pulse. This fraction is normally retained in the Simple Motion module and reflected at the next positioning.
  For the fixed-feed control, since the movement distance is maintained constant (= the command number of pulses is maintained constant), the control is carried out after the fraction pulse is cleared to zero at start.

[Accumulation/cutoff for fractional pulses]

When movement amount per pulse is 1.0 [μm] and movement for 2.5 [μm] is executed two times.

→ Conversion to command pulses: 2.5 [μm] ÷ 1.0 = 2.5 [PLS]

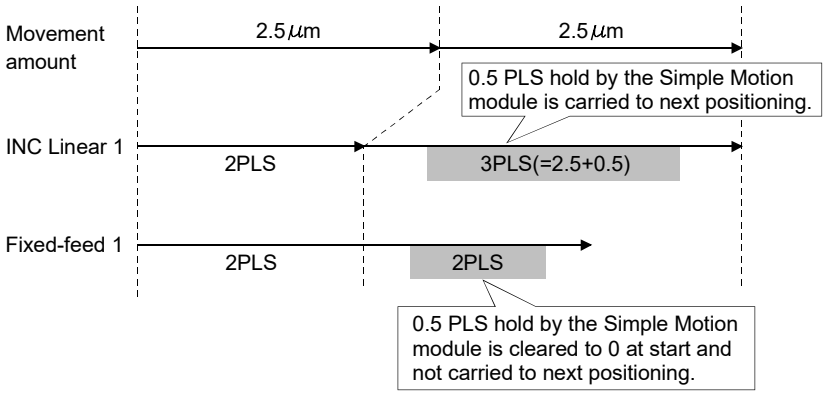

- When the "reference axis speed" is set during 4-axis fixed-feed control, set so the major axis side becomes the reference axis. If the minor axis side is set as the reference axis, the major axis side speed may exceed the "[Pr.8] Speed limit value".
- Refer to Section 9.1.6 "Interpolation control" for the reference axis and interpolation axis combinations.

9.2.10 2-axis circular interpolation control with sub point designation

In "2-axis circular interpolation control" ("[Da.2] Control method" = ABS circular sub, INC circular sub), two motors are used to carry out position control in an arc path passing through designated sub points, while carrying out interpolation for the axis directions set in each axis.
(Refer to Section 9.1.6 "Interpolation control" for details on interpolation control.)

[1] 2-axis circular interpolation control with sub point designation (ABS circular sub)

■ Operation chart

In the absolute system, 2-axis circular interpolation control with sub point designation, positioning is carried out from the current stop position (start point address) to the address (end point address) set in "[Da.6] Positioning address/ movement amount", in an arc path that passes through the sub point address set in "[Da.7] Arc address".

The resulting control path is an arc having as its center the intersection point of perpendicular bisectors of a straight line between the start point address (current stop position) and sub point address (arc address), and a straight line between the sub point address (arc address) and end point address (positioning address).

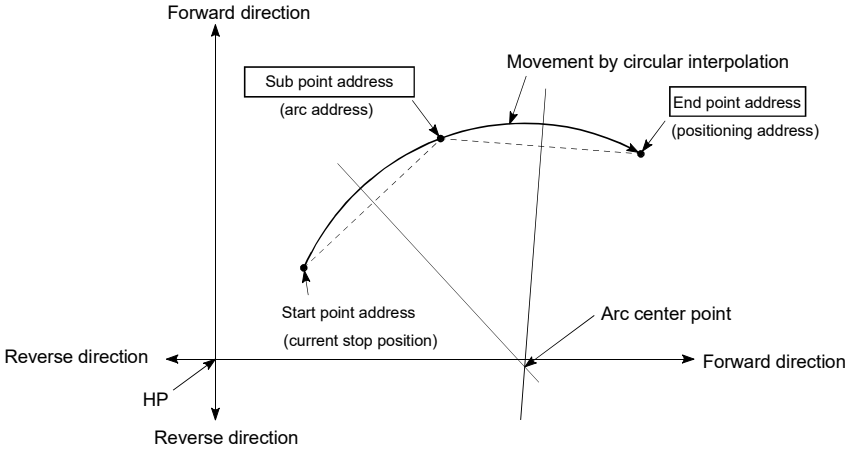

■ Restrictions

(1) 2-axis circular interpolation control cannot be set in the following cases.

- When "degree" is set in "[Pr.1] Unit setting"
- When the units set in "[Pr.1] Unit setting" are different for the reference axis and interpolation axis. ("mm" and "inch" combinations are possible.)
- When "reference axis speed" is set in "[Pr.20] Interpolation speed designation method"

(2) An error will occur and the positioning start will not be possible in the following cases. The machine will immediately stop if the error is detected during positioning control.

- When the radius exceeds "536870912 (=2^{29})". (The maximum radius for which circular interpolation control is possible is "536870912 (=2^{29})"
  ... The error "Outside radius range" (error code: 544) will occur at positioning start.
- When the center point address is outside the range of "–2147483648 (–2^{31}) to 2147483647 (2^{31}–1)"
  ... The error "Sub point setting error" (error code: 525) will occur at positioning start.
- When the start point address is the same as the end point address
  ... The error "End point setting error" (error code: 526) will occur.
- When the start point address is the same as the sub point address
  ... The error "Sub point setting error" (error code: 525) will occur.
- When the end point address is the same as the sub point address
  ... The error "Sub point setting error" (error code: 525) will occur.
- When the start point address, sub point address, and end point address are in a straight line
  ... The error "Sub point setting error" (error code: 525) will occur.

■ Positioning data setting example

[When "2-axis circular interpolation control with sub point designation (ABS circular sub)" is set in positioning data No. 1 of axis 1]

- Reference axis..... Axis 1
- Interpolation axis..... Axis 2 (The required values are also set in positioning data No. 1 of axis 2.)

Setting item \ Axis			QD77MS2/QD77MS4 setting example		QD77MS16 setting example		Setting details
			Axis 1 (reference axis)	Axis 2 (interpolation axis)	Axis 1 (reference axis)	Axis 2 (interpolation axis)	
Axis 1 Positioning data No. 1	[Da.1]	Operation pattern	Positioning complete	–	Positioning complete	–	Set "Positioning complete" assuming the next positioning data will not be executed.
	[Da.2]	Control method	ABS circular sub	–	ABS circular sub	–	Set absolute system, 2-axis circular interpolation control with sub point designation.
	[Da.3]	Acceleration time No.	1	–	1	–	Designate the value set in "[Pr.25] Acceleration time 1" as the acceleration time at start.
	[Da.4]	Deceleration time No.	0	–	0	–	Designate the value set in "[Pr.10] Deceleration time 0" as the deceleration time at deceleration.
	[Da.5]	Axis to be interpolated QD77MS2 QD77MS4	Axis 2	–			Set the axis to be interpolated (partner axis). If the self-axis is set, an error will occur.
	[Da.6]	Positioning address/ movement amount	8000.0 μm	6000.0 μm	8000.0 μm	6000.0 μm	Set the positioning address. (Assuming "mm" is set in "[Pr.1] Unit setting".)
	[Da.7]	Arc address	4000.0 μm	3000.0 μm	4000.0 μm	3000.0 μm	Set the sub point address. (Assuming that the "[Pr.1] Unit setting" is set to "mm".)
	[Da.8]	Command speed	6000.00 mm/min	–	6000.00 mm/min	–	Set the speed when moving to the end point address. (Designate the composite speed in "[Pr.20] Interpolation speed designation method".)
	[Da.9]	Dwell time /JUMP destination positioning data No.	500ms	–	500ms	–	Set the time the machine dwells after the positioning stop (command stop) to the output of the positioning complete signal.
	[Da.10]	M code /Condition data No./Number of LOOP to LEND repetitions	10	–	10	–	Set this when other sub operation commands are issued in combination with the No. 1 positioning data.
	[Da.20]	Axis to be interpolated No.1 QD77MS16			Axis 2	–	Set the axis to be interpolated. If the self-axis is set, an error will occur.
	[Da.21]	Axis to be interpolated No.2 QD77MS16			–	–	Setting not required (setting value is ignored).
	[Da.22]	Axis to be interpolated No.3 QD77MS16			–	–	

(Note): Refer to Section 5.3 "List of positioning data" for information on the setting details.

POINT

Set a value in "[Da.8] Command speed" so that the speed of each axis does not exceed the "[Pr.8] Speed limit value". (The speed limit does not function for the speed calculated by the Simple Motion module during interpolation control.)

[2] 2-axis circular interpolation control with sub point designation (INC circular sub)

■ Operation chart

In the incremental system, 2-axis circular interpolation control with sub point designation, positioning is carried out from the current stop position (start point address) to a position at the end of the movement amount set in "[Da.6] Positioning address/movement amount" in an arc path that passes through the sub point address set in "[Da.7] Arc address". The movement direction depends on the sign (+ or -) of the movement amount.
The resulting control path is an arc having as its center the intersection point of perpendicular bisectors of the straight line between the start point address (current stop position) and sub point address (arc address) calculated from the movement amount to the sub point, and a straight line between the sub point address (arc address) and end point address (positioning address) calculated from the movement amount to the end point.

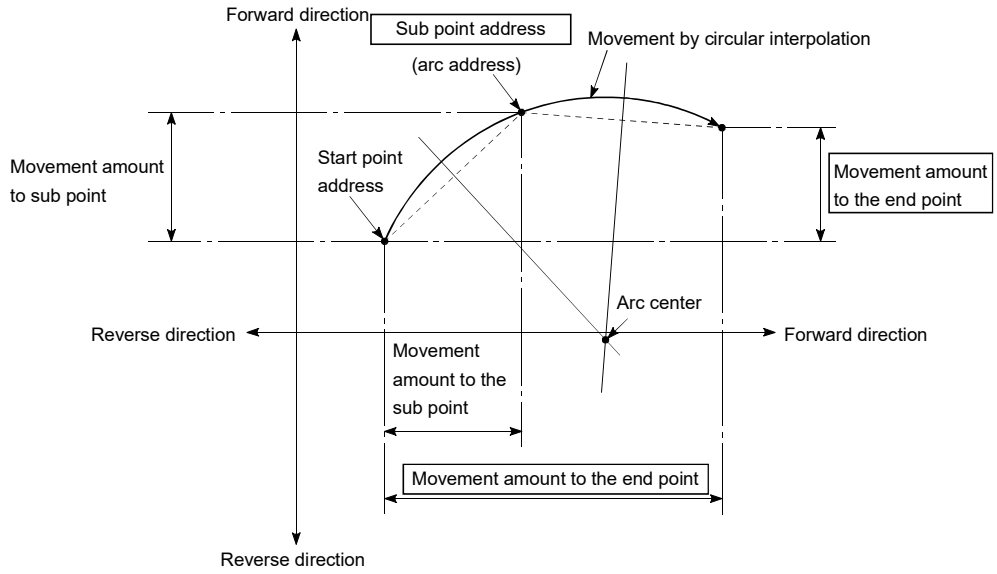

■ Restrictions

(1) 2-axis circular interpolation control cannot be set in the following cases.

- When "degree" is set in "[Pr.1] Unit setting"
- When the units set in "[Pr.1] Unit setting" are different for the reference axis and interpolation axis. ("mm" and "inch" combinations are possible.)
- When "reference axis speed" is set in "[Pr.20] Interpolation speed designation method"

(2) An error will occur and the positioning start will not be possible in the following cases. The machine will immediately stop if the error is detected during positioning control.

- When the radius exceeds "536870912 (=2^{29})". (The maximum radius for which circular interpolation control is possible is "536870912 (=2^{29})"
  ... The error "Outside radius range" (error code: 544) will occur at positioning start.
- When the sub point address is outside the range of "–2147483648 (–2^{31}) to 2147483647 (2^{31}–1)"
  ... The error "Sub point setting error" (error code: 525) will occur.
- When the end point address is outside the range of "–2147483648 (–2^{31}) to 2147483647 (2^{31}–1)"
  ... The error "End point setting error" (error code: 526) will occur.
- When the center point address is outside the range of "–2147483648 (–2^{31}) to 2147483647 (2^{31}–1)"
  ... The error "Sub point setting error" (error code: 525) will occur at positioning start.
- When the start point address is the same as the end point address
  ... The error "End point setting error" (error code: 526) will occur.
- When the start point address is the same as the sub point address
  ... The error "Sub point setting error" (error code: 525) will occur.
- When the end point address is the same as the sub point address
  ... The error "Sub point setting error" (error code: 525) will occur.
- When the start point address, sub point address, and end point address are in a straight line
  ... The error "Sub point setting error" (error code: 525) will occur.

■ Positioning data setting example

[When "2-axis circular interpolation control with sub point designation (INC circular sub)" is set in positioning data No. 1 of axis 1]
• Reference axis..... Axis 1
• Interpolation axis..... Axis 2 (The required values are also set in positioning data No. 1 of axis 2.)

Setting item \ Axis			QD77MS2/QD77MS4 setting example		QD77MS16 setting example		Setting details
			Axis 1 (reference axis)	Axis 2 (interpolation axis)	Axis 1 (reference axis)	Axis 2 (interpolation axis)	
Axis 1 Positioning data No. 1	[Da.1]	Operation pattern	Positioning complete	–	Positioning complete	–	Set "Positioning complete" assuming the next positioning data will not be executed.
	[Da.2]	Control method	INC circular sub	–	INC circular sub	–	Set incremental system, 2-axis circular interpolation control with sub point designation.
	[Da.3]	Acceleration time No.	1	–	1	–	Designate the value set in "[Pr.25] Acceleration time 1" as the acceleration time at start.
	[Da.4]	Deceleration time No.	0	–	0	–	Designate the value set in "[Pr.10] Deceleration time 0" as the deceleration time at deceleration.
	[Da.5]	Axis to be interpolated QD77MS2 QD77MS4	Axis 2	–			Set the axis to be interpolated (partner axis). If the self-axis is set, an error will occur.
	[Da.6]	Positioning address/ movement amount	8000.0 μm	6000.0 μm	8000.0 μm	6000.0 μm	Set the movement amount. (Assuming that the "[Pr.1] Unit setting" is set to "mm".)
	[Da.7]	Arc address	4000.0 μm	3000.0 μm	4000.0 μm	3000.0 μm	Set the sub point address. (Assuming that the "[Pr.1] Unit setting" is set to "mm".)
	[Da.8]	Command speed	6000.00 mm/min	–	6000.00 mm/min	–	Set the speed during movement. (Designate the composite speed in "[Pr.20] Interpolation speed designation method".)
	[Da.9]	Dwell time /JUMP destination positioning data No.	500ms	–	500ms	–	Set the time the machine dwells after the positioning stop (command stop) to the output of the positioning complete signal.
	[Da.10]	M code /Condition data No./Number of LOOP to LEND repetitions	10	–	10	–	Set this when other sub operation commands are issued in combination with the No. 1 positioning data.
	[Da.20]	Axis to be interpolated No.1 QD77MS16			Axis 2	–	Set the axis to be interpolated. If the self-axis is set, an error will occur.
	[Da.21]	Axis to be interpolated No.2 QD77MS16			–	–	Setting not required (setting value is ignored).
	[Da.22]	Axis to be interpolated No.3 QD77MS16			–	–	

(Note): Refer to Section 5.3 "List of positioning data" for information on the setting details.

POINT

Set a value in "[Da.8] Command speed" so that the speed of each axis does not exceed the "[Pr.8] Speed limit value". (The speed limit does not function for the speed calculated by the Simple Motion module during interpolation control.)

9.2.11 2-axis circular interpolation control with center point designation

In "2-axis circular interpolation control" ("[Da.2] Control method" = ABS circular right, INC circular right, ABS circular left, INC circular left), two motors are used to carry out position control in an arc path having an arc address as a center point, while carrying out interpolation for the axis directions set in each axis.
(Refer to Section 9.1.6 "Interpolation control" for details on interpolation control.)

The following table shows the rotation directions, arc center angles that can be controlled, and positioning paths for the different control methods.

Control method	Rotation direction	Arc center angle that can be controlled	Positioning path
ABS circular right	Clockwise	$0^\circ < \theta \leq 360^\circ$	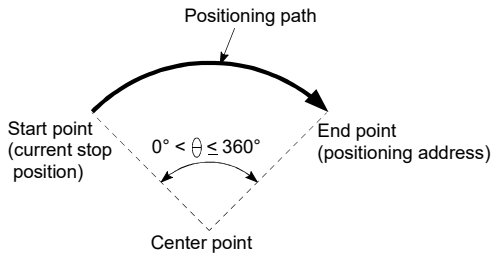
INC circular right			
ABS circular left	Counterclockwise		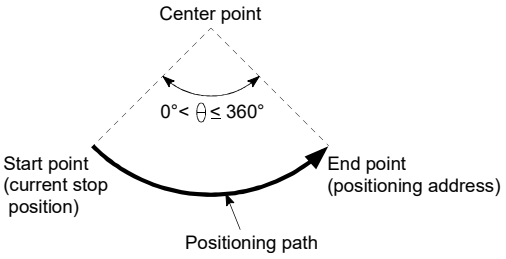
INC circular left			

■ Circular interpolation error compensation

In circular interpolation control with center point designation, the arc path calculated from the start point address and center point address may deviate from the position of the end point address set in "[Da.6] Positioning address/movement amount".
(Refer to "[Pr.41] Allowable circular interpolation error width".)

(1) Calculated error $\leq$ "[Pr.41] Allowable circular interpolation error width"
Circular interpolation control to the set end point address is carried out while the error compensation is carried out. (This is called "spiral interpolation".)

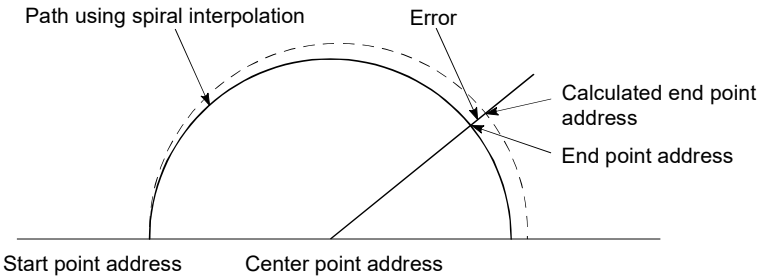

In circular interpolation control with center point designation, an angular velocity is calculated on the assumption that operation is carried out at a command speed on the arc using the radius calculated from the start point address and center point address, and the radius is compensated in proportion to the angular velocity deviated from that at the start point.
Thus, when there is a difference (error) between a radius calculated from the start point address and center point address (start point radius) and a radius calculated from the end point address and center point address (end point radius), the composite speed differs from the command speed as follows.

* Start point radius > End point radius: As compared with the speed without error, the speed becomes slower as end point address is reached.
* Start point radius < End point radius: As compared with the speed without error, the speed becomes faster as end point address is reached.

(2) Calculated error > "[Pr.41] Allowable circular interpolation error width"
At the positioning start, the error "Large arc error deviation" (error code: 506) will occur and the control will not start. The machine will immediately stop if the error is detected during positioning control.

[1] 2-axis circular interpolation control with center point designation (ABS circular right, ABS circular left)

■ Operation chart

In the absolute system, 2-axis circular interpolation control with center point designation positioning is carried out from the current stop position (start point address) to the address (end point address) set in "[Da.6] Positioning address/ movement amount", in an arc path having as its center the address (arc address) of the center point set in "[Da.7] Arc address".

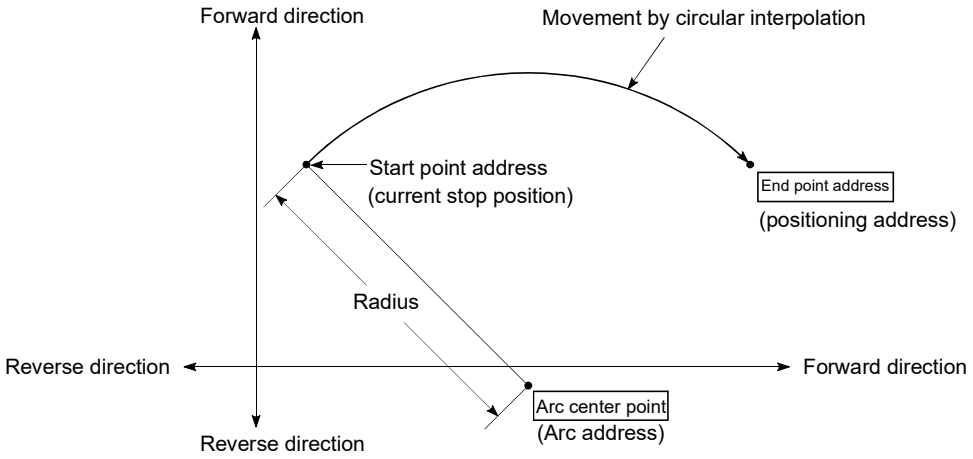

Positioning of a complete round with a radius from the start point address to the arc center point can be carried out by setting the end point address (positioning address) to the same address as the start point address.

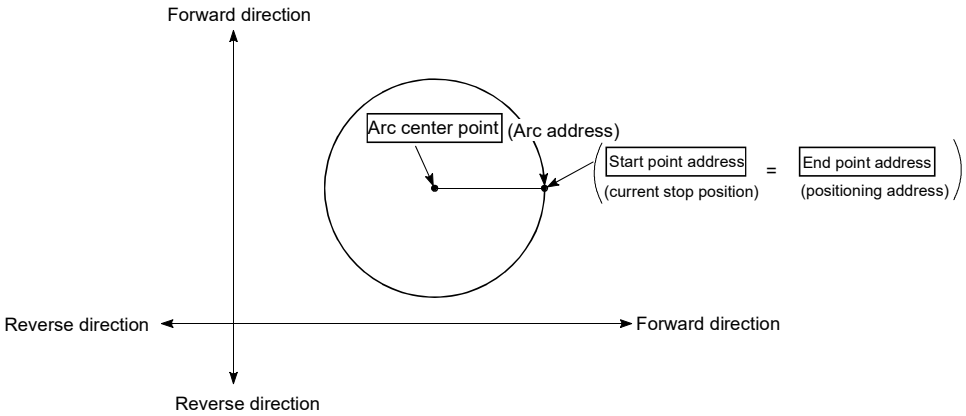

In circular interpolation control with center point designation, an angular velocity is calculated on the assumption that operation is carried out at a command speed on the arc using the radius calculated from the start point address and center point address, and the radius is compensated in proportion to the angular velocity deviated from that at the start point.
Thus, when there is a difference (error) between a radius calculated from the start point address and center point address (start point radius) and a radius calculated from the end point address and center point address (end point radius), the composite speed differs from the command speed as follows.

* Start point radius > End point radius: As compared with the speed without error, the speed becomes slower as end point address is reached.
* Start point radius < End point radius: As compared with the speed without error, the speed becomes faster as end point address is reached.

■ Restrictions

(1) 2-axis circular interpolation control cannot be set in the following cases.
- When "degree" is set in "[Pr.1] Unit setting"
- When the units set in "[Pr.1] Unit setting" are different for the reference axis and interpolation axis. ("mm" and "inch" combinations are possible.)
- When "reference axis speed" is set in "[Pr.20] Interpolation speed designation method"

(2) An error will occur and the positioning start will not be possible in the following cases. The machine will immediately stop if the error is detected during positioning control.
- When the radius exceeds "536870912 (=2^{29})". (The maximum radius for which circular interpolation control is possible is "536870912 (=2^{29})"
  ... The error "Outside radius range" (error code: 544) will occur at positioning start.
- When the start point address is the same as the center point address
  ... The error "Center point setting error" (error code: 527) will occur.
- When the end point address is the same as the center point address
  ... The error "Center point setting error" (error code: 527) will occur.
- When the center point address is outside the range of –2147483648 (-2^{31}) to 2147483647 (2^{31}-1)
  ... The error "Center point setting error" (error code: 527) will occur.

■ Positioning data setting examples

[When "2-axis circular interpolation control with center point designation (ABS circular right, ABS circular left)" is set in positioning data No. 1 of axis 1]
• Reference axis..... Axis 1
• Interpolation axis..... Axis 2 (The required values are also set in positioning data No. 1 of axis 2.)

Setting item \ Axis			QD77MS2/QD77MS4 setting example		QD77MS16 setting example		Setting details
			Axis 1 (reference axis)	Axis 2 (interpolation axis)	Axis 1 (reference axis)	Axis 2 (interpolation axis)	
Axis 1 Positioning data No. 1	[Da.1]	Operation pattern	Positioning complete	–	Positioning complete	–	Set "Positioning complete" assuming the next positioning data will not be executed.
	[Da.2]	Control method	ABS circular right ABS circular left	–	ABS circular right ABS circular left	–	Set absolute system, 2-axis circular interpolation control with center point designation. (Select clockwise or counterclockwise according to the control.)
	[Da.3]	Acceleration time No.	1	–	1	–	Designate the value set in "[Pr.25] Acceleration time 1" as the acceleration time at start.
	[Da.4]	Deceleration time No.	0	–	0	–	Designate the value set in "[Pr.10] Deceleration time 0" as the deceleration time at deceleration.
	[Da.5]	Axis to be interpolated QD77MS2 QD77MS4	Axis 2	–			Set the axis to be interpolated (partner axis). If the self-axis is set, an error will occur.
	[Da.6]	Positioning address/ movement amount	8000.0 μm	6000.0 μm	8000.0 μm	6000.0 μm	Set the positioning address. (Assuming "mm" is set in "[Pr.1] Unit setting".)
	[Da.7]	Arc address	4000.0 μm	3000.0 μm	4000.0 μm	3000.0 μm	Set the arc address (center point address). (Assuming that the "[Pr.1] Unit setting" is set to "mm".)
	[Da.8]	Command speed	6000.00 mm/min	–	6000.00 mm/min	–	Set the speed when moving to the end point address. (Designate the composite speed in "[Pr.20] Interpolation speed designation method".)
	[Da.9]	Dwell time /JUMP destination positioning data No.	500ms	–	500ms	–	Set the time the machine dwells after the positioning stop (command stop) to the output of the positioning complete signal.
	[Da.10]	M code /Condition data No./Number of LOOP to LEND repetitions	10	–	10	–	Set this when other sub operation commands are issued in combination with the No.1 positioning data.
	[Da.20]	Axis to be interpolated No.1 QD77MS16			Axis 2	–	Set the axis to be interpolated. If the self-axis is set, an error will occur.
	[Da.21]	Axis to be interpolated No.2 QD77MS16			–	–	Setting not required (setting value is ignored).
	[Da.22]	Axis to be interpolated No.3 QD77MS16			–	–	

(Note): Refer to Section 5.3 "List of positioning data" for information on the setting details.

POINT

Set a value in "[Da.8] Command speed" so that the speed of each axis does not exceed the "[Pr.8] Speed limit value". (The speed limit does not function for the speed calculated by the Simple Motion module during interpolation control.)

[2] 2-axis circular interpolation control with center point designation (INC circular right, INC circular left)

■ Operation chart

In the incremental system, 2-axis circular interpolation control with center point designation, positioning is carried out from the current stop position (start point address) to a position at the end of the movement amount set in "[Da.6] Positioning address/movement amount", in an arc path having as its center the address (arc address) of the center point set in "[Da.7] Arc address".

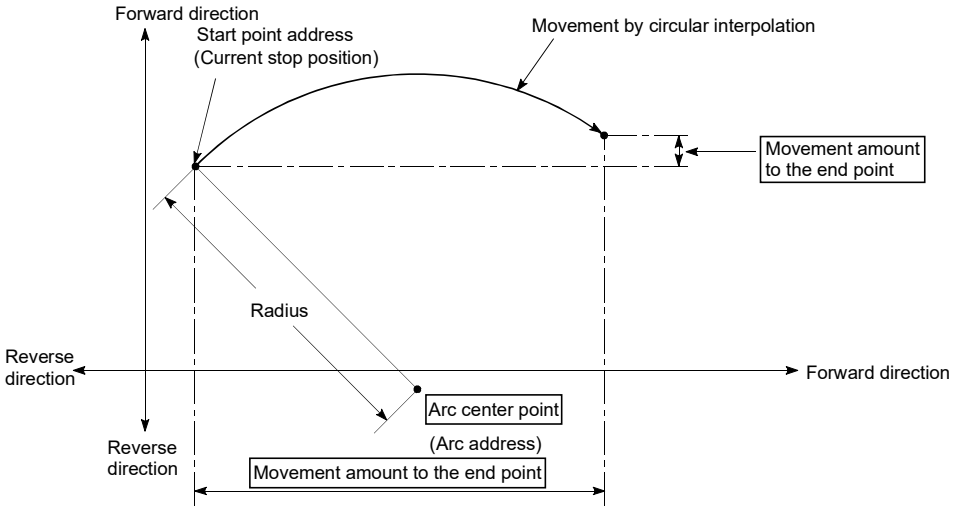

Positioning of a complete round with a radius of the distance from the start point address to the arc center point can be carried out by setting the movement amount to "0".

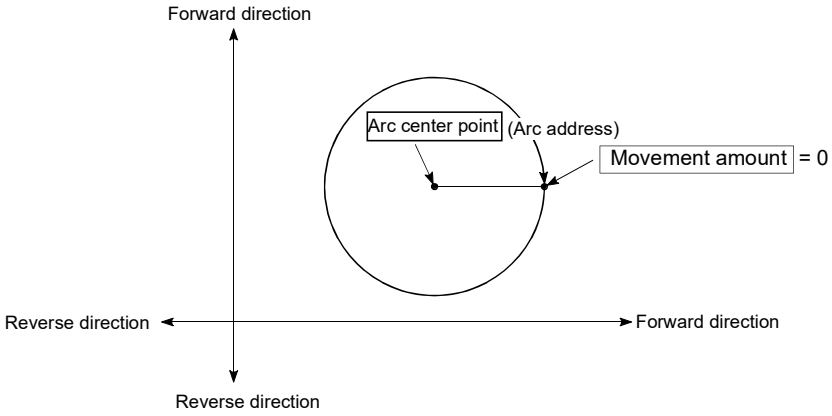

In circular interpolation control with center point designation, an angular velocity is calculated on the assumption that operation is carried out at a command speed on the arc using the radius calculated from the start point address and center point address, and the radius is compensated in proportion to the angular velocity deviated from that at the start point.
Thus, when there is a difference (error) between a radius calculated from the start point address and center point address (start point radius) and a radius calculated from the end point address and center point address (end point radius), the composite speed differs from the command speed as follows.

* Start point radius > End point radius: As compared with the speed without error, the speed becomes slower as end point address is reached.
* Start point radius < End point radius: As compared with the speed without error, the speed becomes faster as end point address is reached.

■ Restrictions

(1) 2-axis circular interpolation control cannot be set in the following cases.
- When "degree" is set in "[Pr.1] Unit setting"
- When the units set in "[Pr.1] Unit setting" are different for the reference axis and interpolation axis. ("mm" and "inch" combinations are possible.)
- When "reference axis speed" is set in "[Pr.20] Interpolation speed designation method"

(2) An error will occur and the positioning start will not be possible in the following cases. The machine will immediately stop if the error is detected during positioning control.
- When the radius exceeds "536870912 (=2^{29})". (The maximum radius for which circular interpolation control is possible is "536870912 (=2^{29})"
  ... The error "Outside radius range" (error code: 544) will occur at positioning start.
- When the end point address is outside the range of –2147483648 (-2^{31}) to 2147483647 (2^{31}-1)
  ... The error "End point setting error" (error code: 526) will occur.
- When the start point address is the same as the center point address
  ... The error "Center point setting error" (error code: 527) will occur.
- When the end point address is the same as the center point address
  ... The error "Center point setting error" (error code: 527) will occur.
- When the center point address is outside the range of –2147483648 (-2^{31}) to 2147483647 (2^{31}-1)
  ... The error "Center point setting error" (error code: 527) will occur.

■ Positioning data setting examples

[When "2-axis circular interpolation control with center point designation (INC circular right, INC circular left)" is set in positioning data No. 1 of axis 1]
• Reference axis..... Axis 1
• Interpolation axis..... Axis 2 (The required values are also set in positioning data No. 1 of axis 2.)

Setting item \ Axis			QD77MS2/QD77MS4 setting example		QD77MS16 setting example		Setting details
			Axis 1 (reference axis)	Axis 2 (interpolation axis)	Axis 1 (reference axis)	Axis 2 (interpolation axis)	
Axis 1 Positioning data No. 1	[Da.1]	Operation pattern	Positioning complete	–	Positioning complete	–	Set "Positioning complete" assuming the next positioning data will not be executed.
	[Da.2]	Control method	INC circular right INC circular left	–	INC circular right INC circular left	–	Set incremental system, 2-axis circular interpolation control with center point designation. (Select clockwise or counterclockwise according to the control.)
	[Da.3]	Acceleration time No.	1	–	1	–	Designate the value set in "[Pr.25] Acceleration time 1" as the acceleration time at start.
	[Da.4]	Deceleration time No.	0	–	0	–	Designate the value set in "[Pr.10] Deceleration time 0" as the deceleration time at deceleration.
	[Da.5]	Axis to be interpolated QD77MS2 QD77MS4	Axis 2	–			Set the axis to be interpolated (partner axis). If the self-axis is set, an error will occur.
	[Da.6]	Positioning address/ movement amount	8000.0 μm	6000.0 μm	8000.0 μm	6000.0 μm	Set the movement amount. (Assuming that the "[Pr.1] Unit setting" is set to "mm".)
	[Da.7]	Arc address	4000.0 μm	3000.0 μm	4000.0 μm	3000.0 μm	Set the center point address (center point address). (Assuming that the "[Pr.1] Unit setting" is set to "mm".)
	[Da.8]	Command speed	6000.00 mm/min	–	6000.00 mm/min	–	Set the speed when moving to the end point address. (Designate the composite speed in "[Pr.20] Interpolation speed designation method".)
	[Da.9]	Dwell time /JUMP destination positioning data No.	500ms	–	500ms	–	Set the time the machine dwells after the positioning stop (command stop) to the output of the positioning complete signal.
	[Da.10]	M code /Condition data No./Number of LOOP to LEND repetitions	10	–	10	–	Set this when other sub operation commands are issued in combination with the No.1 positioning data.
	[Da.20]	Axis to be interpolated No.1 QD77MS16			Axis 2	–	Set the axis to be interpolated. If the self-axis is set, an error will occur.
	[Da.21]	Axis to be interpolated No.2 QD77MS16			–	–	Setting not required (setting value is ignored).
	[Da.22]	Axis to be interpolated No.3 QD77MS16			–	–	

(Note): Refer to Section 5.3 "List of positioning data" for information on the setting details.

POINT

Set a value in "[Da.8] Command speed" so that the speed of each axis does not exceed the "[Pr.8] Speed limit value". (The speed limit does not function for the speed calculated by the Simple Motion module during interpolation control.)

9.2.12 1-axis speed control

In "1-axis speed control" ("[Da.2] Control method" = Forward run: speed 1, Reverse run: speed 1), control is carried out in the axis direction in which the positioning data has been set by continuously outputting pulses for the speed set in "[Da.8] Command speed" until the input of a stop command.
The two types of 1-axis speed control are "Forward run: speed 1" in which the control starts in the forward run direction, and "Reverse run: speed 1" in which control starts in the reverse run direction.

■ Operation chart

The following chart shows the operation timing for 1-axis speed control with axis 1 as the reference axis.
The "in speed control" flag ([Md.31] Status: b0) is turned ON during speed control.
The "Positioning complete signal" is not turned ON.

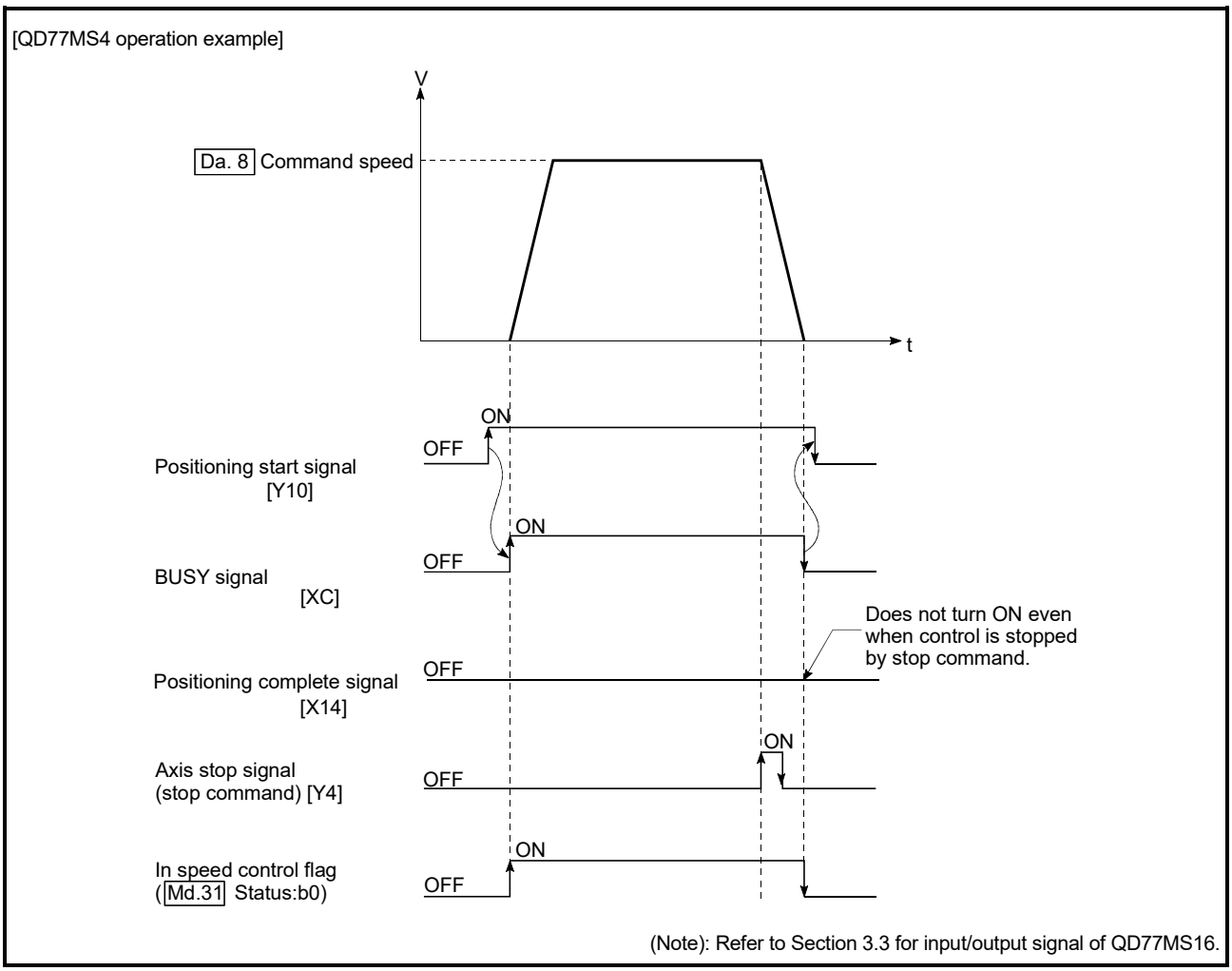

Fig.9.9 1-axis speed control operation timing

Command position value during 1-axis speed control

The following table shows the "[Md.20] Command position value" during 1-axis speed control corresponding to the "[Pr.21] Command position value during speed control" settings.

"[Pr.21] Command position value during speed control" setting	[Md.20] Command position value
0: Do not update command position value	The command position value at speed control start is maintained.
1: Update command position value	The command position value is updated.
2: Zero clear command position value	The command position value is fixed at 0.

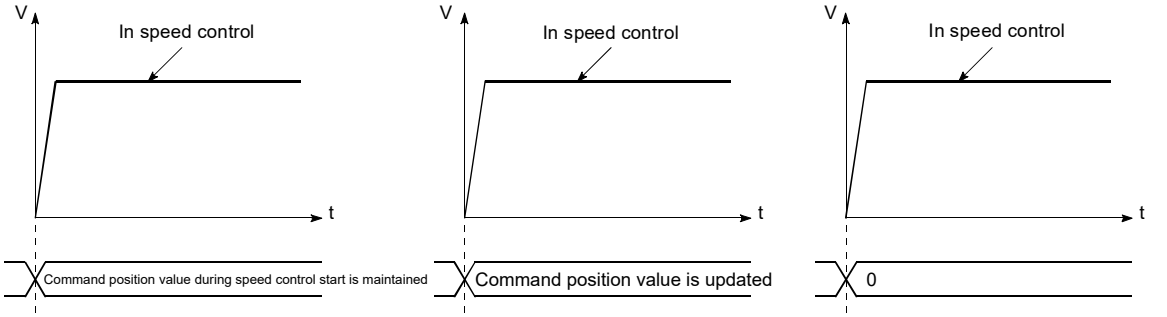

(a) Command position value not updated (b) Command position value updated (c) Command position value zero cleared

Restrictions

(1) Set "Positioning complete" in "[Da.1] Operation pattern". The error "Continuous path control not possible" (error code: 516) will occur and the operation cannot start if "continuous positioning control" or "continuous path control" is set in "[Da.1] Operation pattern".
("Continuous positioning control" and "continuous path control" cannot be set in speed control.)

(2) Set the WITH mode in "[Pr.18] M code ON signal output timing" when using an M code. The M code will not be output, and the M code ON signal will not turn ON if the AFTER mode is set.

(3) The error "No command speed" (error code: 503) will occur if the current speed (-1) is set in "[Da.8] Command speed".

(4) The software stroke limit check is not carried out if the control unit is set to "degree".

■ Positioning data setting examples

[When "1-axis speed control (forward run: speed 1)" is set in the positioning data No. 1 of axis 1]

Setting item			Setting example		Setting details
			QD77MS2 QD77MS4	QD77MS16	
Axis 1 Positioning data No. 1	[Da.1]	Operation pattern	Positioning complete		Setting other than "Positioning complete" is not possible in speed control.
	[Da.2]	Control method	Forward run speed 1		Set 1-axis speed control.
	[Da.3]	Acceleration time No.	1		Designate the value set in "[Pr.25] Acceleration time 1" as the acceleration time at start.
	[Da.4]	Deceleration time No.	0		Designate the value set in "[Pr.10] Deceleration time 0" as the deceleration time at deceleration.
	[Da.5]	Axis to be interpolated QD77MS2 QD77MS4	–		Setting not required (setting value is ignored).
	[Da.6]	Positioning address/ movement amount	–		
	[Da.7]	Arc address	–		
	[Da.8]	Command speed	6000.00mm/min		Set the speed to be commanded.
	[Da.9]	Dwell time/JUMP destination positioning data No.	–		Setting not required (setting value is ignored).
	[Da.10]	M code/Condition data No./Number of LOOP to LEND repetitions	10		Set this when other sub operation commands are issued in combination with the No. 1 positioning data. ("[Pr.18] M code ON signal output timing" setting only possible in the WITH mode.)
	[Da.20]	Axis to be interpolated No.1 QD77MS16		–	Setting not required (setting value is ignored).
	[Da.21]	Axis to be interpolated No.2 QD77MS16		–	
	[Da.22]	Axis to be interpolated No.3 QD77MS16		–	

(Note): Refer to Section 5.3 "List of positioning data" for information on the setting details.

9.2.13 2-axis speed control

In "2-axis speed control" ("[Da.2] Control method" = Forward run: speed 2, Reverse run: speed 2), control is carried out in the 2-axis direction in which the positioning data has been set by continuously outputting pulses for the speed set in "[Da.8] Command speed" until the input of a stop command.
The two types of 2-axis speed control are "Forward run: speed 2" in which the control starts in the forward run direction, and "Reverse run: speed 2" in which control starts in the reverse run direction.
(Refer to Section 9.1.6 "Interpolation control" for the combination of the reference axis with the interpolation axis.)

■ Operation chart

The following chart shows the operation timing for 2-axis (axes 1 and 2) speed control with axis 1 as the reference axis. The "in speed control" flag ([Md.31] Status: b0) is turned ON during speed control.
The "positioning complete signal" is not turned ON.

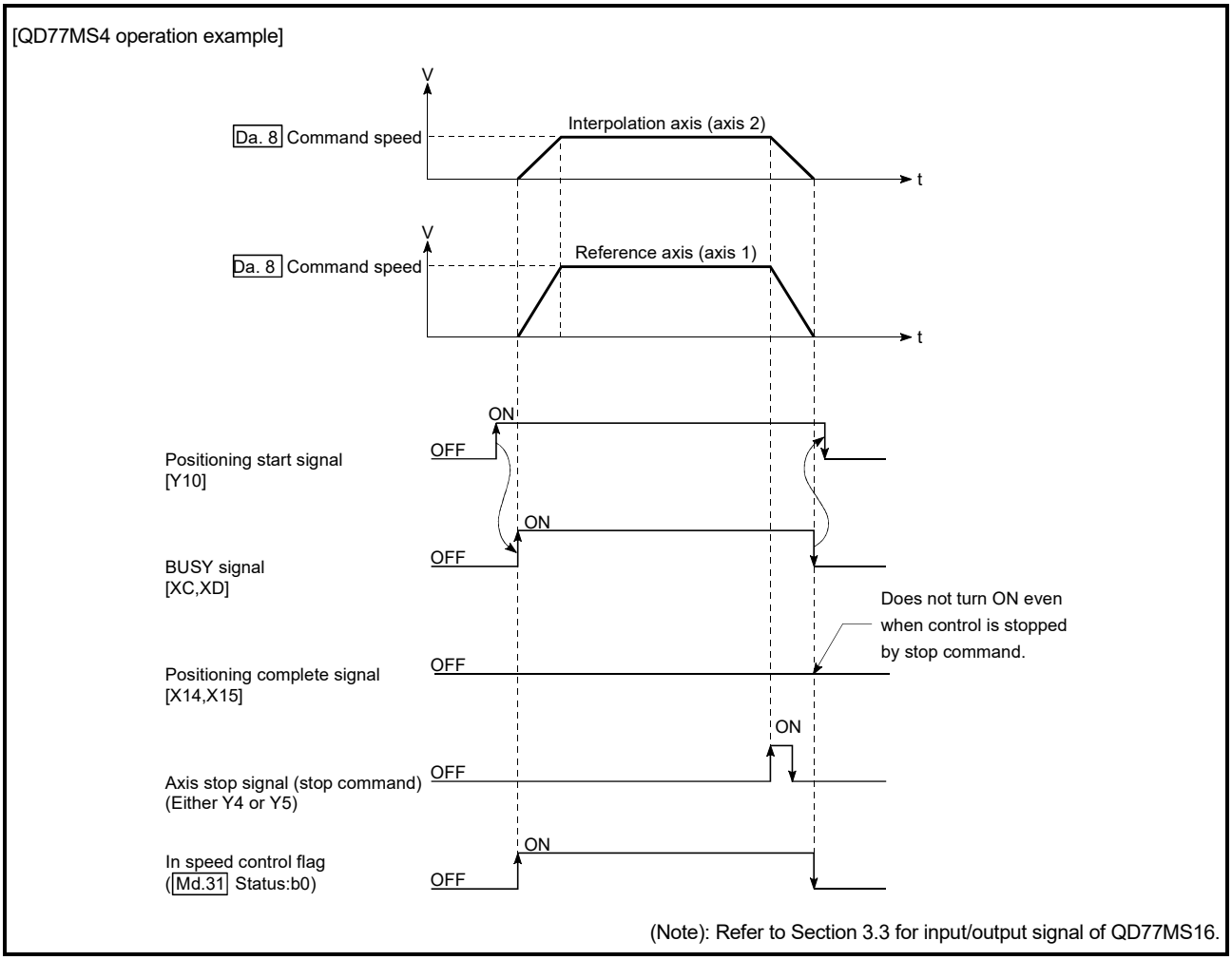

Fig. 9.10 2-axis speed control operation timing

Command position value during 2-axis speed control

The following table shows the "[Md.20] Command position value" during 2-axis speed control corresponding to the "[Pr.21] Command position value during speed control" settings. (Note that the reference axis setting values are used for parameters.)

"[Pr.21] Command position value during speed control" setting	[Md.20] Command position value
0: Do not update command position value	The command position value at speed control start is maintained.
1: Update command position value	The command position value is updated.
2: Zero clear command position value	The command position value is fixed at 0.

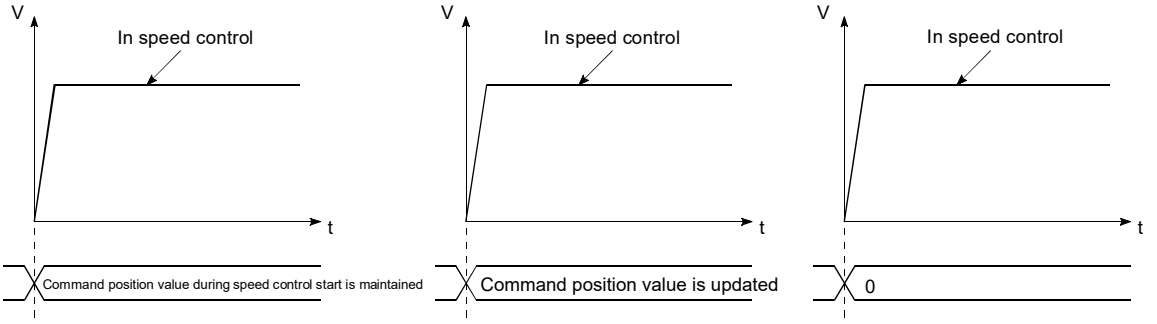

(a) Command position value not updated (b) Command position value updated (c) Command position value zero cleared

Restrictions

(1) Set "Positioning complete" in "[Da.1] Operation pattern". The error "Continuous path control not possible" (error code: 516) will occur and the operation cannot start if "continuous positioning control" or "continuous path control" is set. ("Continuous positioning control" and "continuous path control" cannot be set in speed control.)

(2) Set the WITH mode in "[Pr.18] M code ON signal output timing" when using an M code. The M code will not be output, and the M code ON signal will not turn ON if the AFTER mode is set.

(3) Set the "reference axis speed" in "[Pr.20] Interpolation speed designation method". The error "Interpolation mode error" (error code: 523) will occur and the operation cannot start if a composite speed is set.

(4) When either of two axes exceeds the speed limit, that axis is controlled with the speed limit value. The speeds of the other axes are limited at the ratios of "[Da.8] Command speed".
(Examples)

Setting item \ Axis		Axis 1 setting	Axis 2 setting
[Pr.8]	Speed limit value	4000.00mm/min	5000.00mm/min
[Da.8]	Command speed	8000.00mm/min	6000.00mm/min

With the settings shown above, the operation speed in speed control is as follows.
Axis 1: 4000.00 mm/min (Speed is limited by [Pr.8]).
Axis 2: 3000.00 mm/min (Speed is limited at a ratio of an axis 1 command speed to an axis 2 command speed).
(Note): Operation runs at speed 1 when a reference axis speed is less than 1 as a result of speed limit.
In addition, when "[Pr.7] Bias speed at start" is set, the set value will be the minimum speed.

(5) An error "No command speed (error code: 503)" occurs if a current speed (-1) is set in "[Da.8] Command speed".

(6) The software stroke limit check is not carried out when the control unit is set to "degree".

■ Positioning data setting examples

[When "2-axis speed control (forward run: speed 2)" is set in the positioning data No. 1 of axis 1]

- Reference axis..... Axis 1
- Interpolation axis..... Axis 2 (The required values are also set in positioning data No.1 of axis 2.)

Setting item / Axis			QD77MS2/QD77MS4 setting example		QD77MS16 setting example		Setting details
			Axis 1 (reference axis)	Axis 2 (interpolation axis)	Axis 1 (reference axis)	Axis 2 (interpolation axis)	
Axis 1 Positioning data No. 1	[Da.1]	Operation pattern	Positioning complete	–	Positioning complete	–	Setting other than "Positioning complete" is not possible in speed control.
	[Da.2]	Control method	Forward run speed 2	–	Forward run speed 2	–	Set 2-axis speed control.
	[Da.3]	Acceleration time No.	1	–	1	–	Designate the value set in "[Pr.25] Acceleration time 1" as the acceleration time at start.
	[Da.4]	Deceleration time No.	0	–	0	–	Designate the value set in "[Pr.10] Deceleration time 0" as the deceleration time at deceleration.
	[Da.5]	Axis to be interpolated QD77MS2 QD77MS4	Axis 2	–			Set the axis to be interpolated (partner axis). If the self-axis is set, an error will occur.
	[Da.6]	Positioning address/ movement amount	–	–	–	–	Setting not required (setting value is ignored).
	[Da.7]	Arc address	–	–	–	–	
	[Da.8]	Command speed	6000.00 mm/min	3000.00 mm/min	6000.00 mm/min	3000.00 mm/min	Set the speed to be commanded.
	[Da.9]	Dwell time/JUMP destination positioning data No.	–	–	–	–	Setting not required (setting value is ignored).
	[Da.10]	M code/Condition data No./Number of LOOP to LEND repetitions	10	–	10	–	Set this when other sub operation commands are issued in combination with the No. 1 positioning data. ("[Pr.18] M code ON signal output timing" setting only possible in the WITH mode.)
	[Da.20]	Axis to be interpolated No.1 QD77MS16			Axis 2	–	Set the axis to be interpolated. If the self-axis is set, an error will occur.
	[Da.21]	Axis to be interpolated No.2 QD77MS16			–	–	Setting not required (setting value is ignored).
	[Da.22]	Axis to be interpolated No.3 QD77MS16			–	–	

(Note): Refer to Section 5.3 "List of positioning data" for information on the setting details.

9.2.14 3-axis speed control

In "3-axis speed control" ("[Da.2] Control method" = Forward run: speed 3, Reverse run: speed 3), control is carried out in the 3-axis direction in which the positioning data has been set by continuously outputting pulses for the speed set in "[Da.8] Command speed" until the input of a stop command.
The two types of 3-axis speed control are "Forward run: speed 3" in which the control starts in the forward run direction, and "Reverse run: speed 3" in which control starts in the reverse run direction.
(Refer to Section 9.1.6 "Interpolation control" for the combination of the reference axis with the interpolation axes.)

■ Operation chart

The following chart shows the operation timing for 3-axis (axes 1, 2, and 3) speed control with axis 1 as the reference axis.
The "in speed control" flag ([Md.31] Status: b0) is turned ON during speed control.
The "positioning complete signal" is not turned ON.

[QD77MS4 operation example]

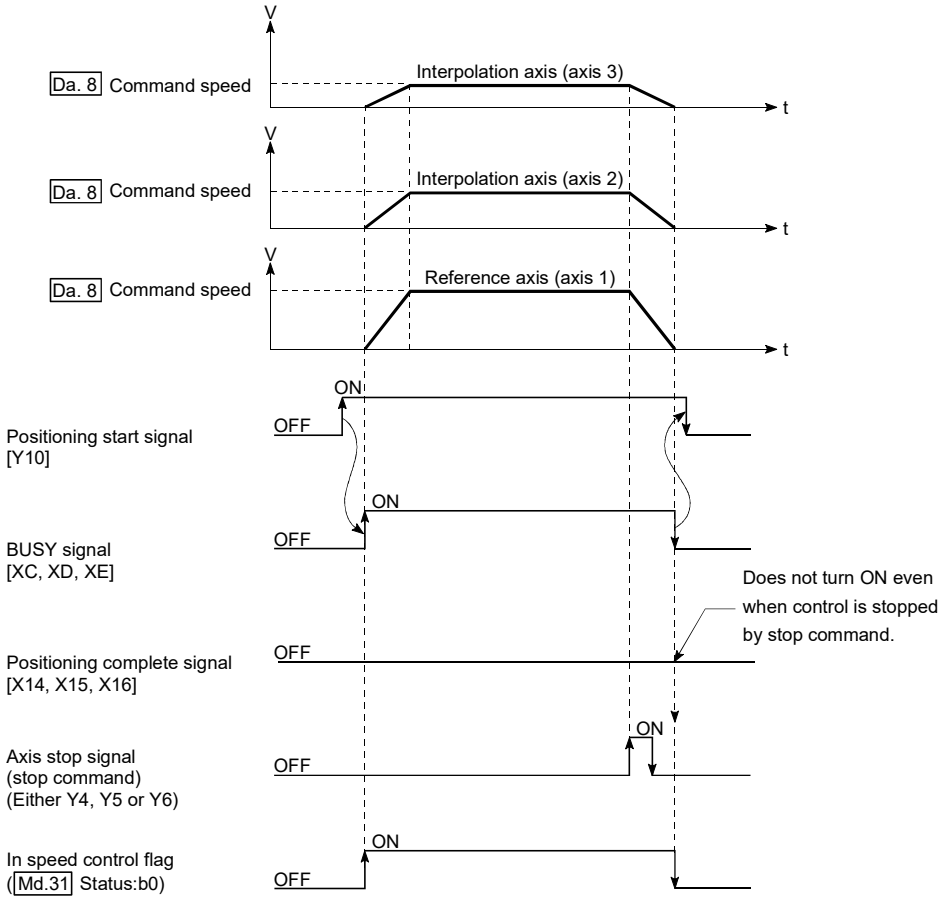

(Note): Refer to Section 3.3 for input/output signal of QD77MS16.

Fig. 9.11 3-axis speed control operation timing

Command position value during 3-axis speed control

The following table shows the "[Md.20] Command position value" during 3-axis speed control corresponding to the "[Pr.21] Command position value during speed control" settings. (Note that the reference axis setting values are used for parameters.)

"[Pr.21] Command position value during speed control" setting	[Md.20] Command position value
0: Do not update command position value	The command position value at speed control start is maintained.
1: Update command position value	The command position value is updated.
2: Zero clear command position value	The command position value is fixed at 0.

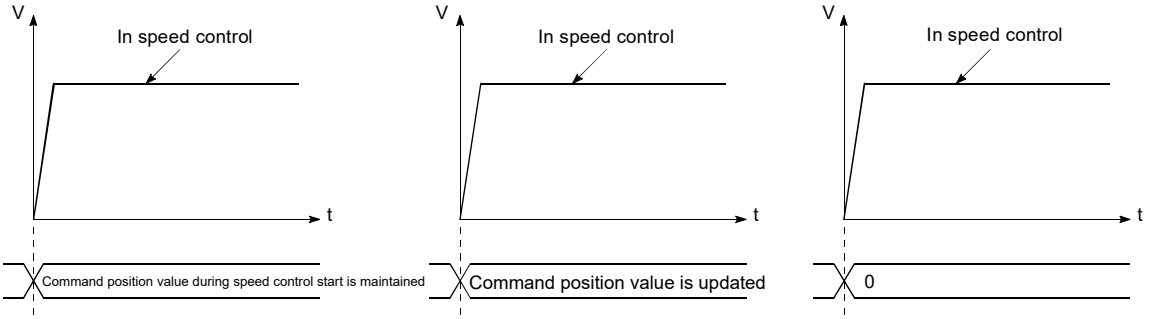

(a) Command position value not updated (b) Command position value updated (c) Command position value zero cleared

Restrictions

(1) Set "Positioning complete" in "[Da.1] Operation pattern". The error "Continuous path control not possible" (error code: 516) will occur and the operation cannot start if "continuous positioning control" or "continuous path control" is set. ("Continuous positioning control" and "continuous path control" cannot be set in speed control.)

(2) Set the WITH mode in "[Pr.18] M code ON signal output timing" when using an M code. The M code will not be output, and the M code ON signal will not turn ON if the AFTER mode is set.

(3) Set the "reference axis speed" in "[Pr.20] Interpolation speed designation method". The error "Interpolation mode error" (error code: 523) will occur and the operation cannot start if a composite speed is set.

(4) When either of three axes exceeds the speed limit, that axis is controlled with the speed limit value. The speeds of the other axes are limited at the ratios of "[Da.8] Command speed".
(Examples)

Setting item \ Axis		Axis 1 setting	Axis 2 setting	Axis 3 setting
[Pr.8]	Speed limit value	4000.00mm/min	5000.00mm/min	6000.00mm/min
[Da.8]	Command speed	8000.00mm/min	6000.00mm/min	4000.00mm/min

With the settings shown above, the operation speed in speed control is as follows.
Axis 1: 4000.00 mm/min (Speed is limited by [Pr.8].)
Axis 2: 3000.00 mm/min (Speed is limited at ratios in axes 1, 2, and 3 command speeds.)
Axis 3: 2000.00 mm/min (Speed is limited at ratios in axes 1, 2, and 3 command speeds.)
(Note): Operation runs at speed 1 when a reference axis speed is less than 1 as a result of speed limit.
In addition, when "[Pr.7] Bias speed at start" is set, the set value will be the minimum speed.

(5) An error "No command speed (error code: 503)" will occur if a current speed (-1) is set in "[Da.8] Command speed".

(6) The software stroke limit check is not carried out when the control unit is set to "degree".

■ Positioning data setting examples

[When "3-axis speed control (forward run: speed 3)" is set in the positioning data No. 1 of axis 1]

- Reference axis..... Axis 1
- Interpolation axis..... Axis 2, Axis 3 (The required values are also set in positioning data No.1 of axis 2 and axis 3.)

Setting item \ Axis			QD77MS4 setting example			QD77MS16 setting example			Setting details
			Axis 1 (reference axis)	Axis 2 (interpolation axis)	Axis 3 (interpolation axis)	Axis 1 (reference axis)	Axis 2 (interpolation axis)	Axis 3 (interpolation axis)	
Axis 1 Positioning data No. 1	[Da.1]	Operation pattern	Positioning complete	–	–	Positioning complete	–	–	Setting other than "Positioning complete" is not possible in speed control.
	[Da.2]	Control method	Forward run speed 3	–	–	Forward run speed 3	–	–	Set 3-axis speed control.
	[Da.3]	Acceleration time No.	1	–	–	1	–	–	Designate the value set in "[Pr.25] Acceleration time 1" as the acceleration time at start.
	[Da.4]	Deceleration time No.	0	–	–	0	–	–	Designate the value set in "[Pr.10] Deceleration time 0" as the deceleration time at deceleration.
	[Da.5]	Axis to be interpolated QD77MS4	–	–	–				Setting not required (setting value is ignored). When axis 1 is used as a reference axis, the interpolation axes are axes 2 and 3.
	[Da.6]	Positioning address/ movement amount	–	–	–	–	–	–	Setting not required (setting value is ignored).
	[Da.7]	Arc address	–	–	–	–	–	–	
	[Da.8]	Command speed	6000.00 mm/min	3000.00 mm/min	2000.00 mm/min	6000.00 mm/min	3000.00 mm/min	2000.00 mm/min	Set the speed to be commanded.
	[Da.9]	Dwell time/JUMP destination positioning data No.	–	–	–	–	–	–	Setting not required (setting value is ignored).
	[Da.10]	M code/Condition data No./Number of LOOP to LEND repetitions	10	–	–	10	–	–	Set this when other sub operation commands are issued in combination with the No. 1 positioning data. ("[Pr.18] M code ON signal output timing" setting only possible in the WITH mode.)
	[Da.20]	Axis to be interpolated No.1 QD77MS16				Axis 2	–	–	Set the axis to be interpolated. If the self-axis is set, an error will occur.
	[Da.21]	Axis to be interpolated No.2 QD77MS16				Axis 3	–	–	
	[Da.22]	Axis to be interpolated No.3 QD77MS16				–	–	–	Setting not required (setting value is ignored).

(Note): Refer to Section 5.3 "List of positioning data" for information on the setting details.

9.2.15 4-axis speed control

In "4-axis speed control" ("[Da.2] Control method" = Forward run: speed 4, Reverse run: speed 4), control is carried out in the 4-axis direction in which the positioning data has been set by continuously outputting pulses for the speed set in "[Da.8] Command speed" until the input of a stop command.
The two types of 4-axis speed control are "Forward run: speed 4" in which the control starts in the forward run direction, and "Reverse run: speed 4" in which control starts in the reverse run direction.
(Refer to Section 9.1.6 "Interpolation control" for the combination of the reference axis with the interpolation axes.)

■ Operation chart

The following chart shows the operation timing for 4-axis speed control with axis 1 as the reference axis.
The "in speed control" flag ([Md.31] Status: b0) is turned ON during speed control.
The "positioning complete signal" is not turned ON.

[QD77MS4 operation example]

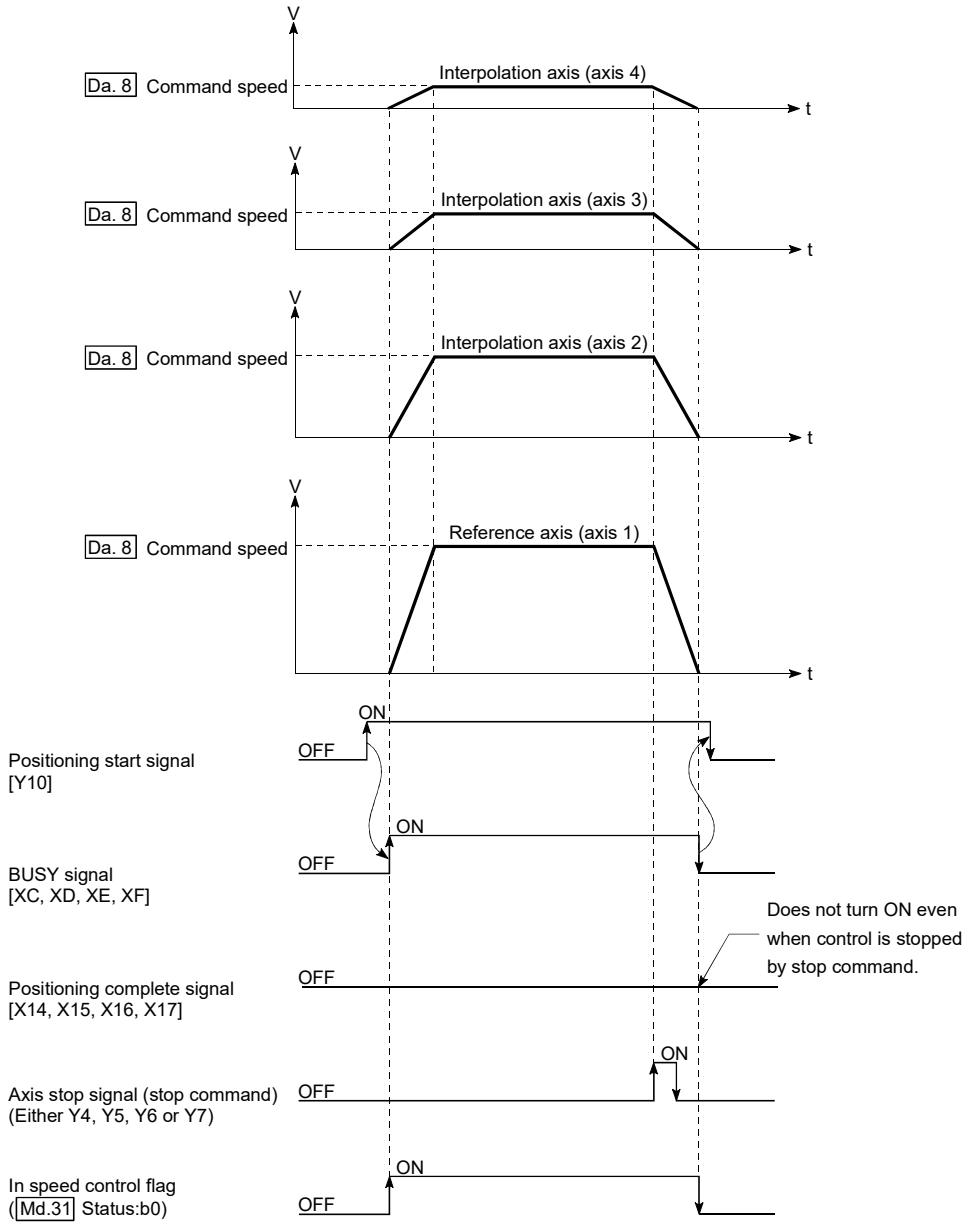

(Note): Refer to Section 3.3 for input/output signal of QD77MS16.

Fig. 9.12 4-axis speed control operation timing

■ Command position value during 4-axis speed control

The following table shows the "[Md.20] Command position value" during 4-axis speed control corresponding to the "[Pr.21] Command position value during speed control" settings. (Note that the reference axis setting values are used for parameters.)

"[Pr.21] Command position value during speed control" setting	[Md.20] Command position value
0: Do not update command position value	The command position value at speed control start is maintained.
1: Update command position value	The command position value is updated.
2: Zero clear command position value	The command position value is fixed at 0.

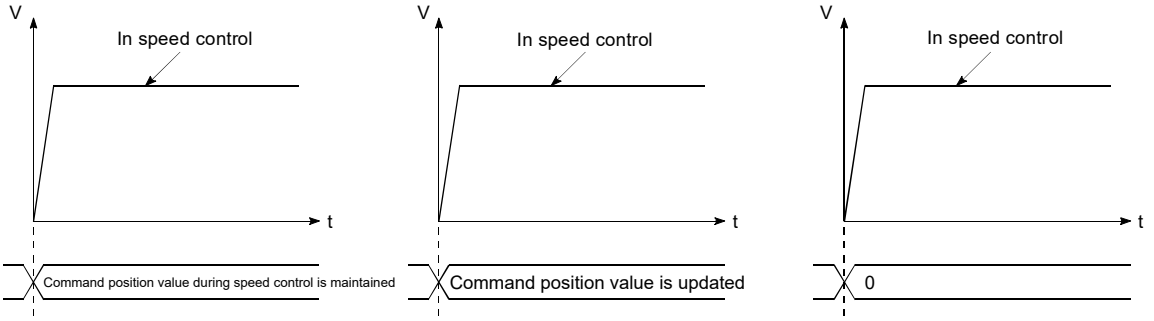

(a) Command position value not updated (b) Command position value updated (c) Command position value zero cleared

■ Restrictions

(1) Set "Positioning complete" in "[Da.1] Operation pattern". The error "Continuous path control not possible" (error code: 516) will occur and the operation cannot start if "continuous positioning control" or "continuous path control" is set. ("Continuous positioning control" and "continuous path control" cannot be set in speed control.)

(2) Set the WITH mode in "[Pr.18] M code ON signal output timing" when using an M code. The M code will not be output, and the M code ON signal will not turn ON if the AFTER mode is set.

(3) Set the "reference axis speed" in "[Pr.20] Interpolation speed designation method". The error "Interpolation mode error" (error code: 523) will occur and the operation cannot start if a composite speed is set.

(4) When either of four axes exceeds the speed limit, that axis is controlled with the speed limit value. The speeds of the other axes are limited at the ratios of "[Da.8] Command speed".
(Examples)

Setting item \ Axis		Axis 1 setting	Axis 2 setting	Axis 3 setting	Axis 4 setting
[Pr.8]	Speed limit value	4000.00mm/ min	5000.00mm/ min	6000.00mm/ min	8000.00mm/ min
[Da.8]	Command speed	8000.00mm/ min	6000.00mm/ min	4000.00mm/ min	1500.00mm/ min

With the settings shown above, the operation speed in speed control is as follows.
Axis 1: 4000.00 mm/min (Speed is limited by [Pr.8].)
Axis 2: 3000.00 mm/min (Speed is limited at ratios in axes 1, 2, 3 and 4 command speeds.)
Axis 3: 2000.00 mm/min (Speed is limited at ratios in axes 1, 2, 3 and 4 command speeds.)
Axis 4: 750.00 mm/min (Speed is limited at ratios in axes 1, 2, 3 and 4 command speeds.)
(Note): Operation runs at speed 1 when a reference axis speed is less than 1 as a result of speed limit.
In addition, when "[Pr.7] Bias speed at start" is set, the set value will be the minimum speed.

(5) An error "No command speed (error code: 503)" will occur if a current speed (-1) is set in "[Da.8] Command speed".

(6) The software stroke limit check is not carried out when the control unit is set to "degree".

■ Positioning data setting examples

[When "4-axis speed control (forward run: speed 4)" is set in the positioning data No. 1 of axis 1]

- Reference axis..... Axis 1
- Interpolation axis..... Axis 2 to Axis 4 (The required values are also set in positioning data No. 1 of axis 2 to axis 4.)

Setting item			Axis	QD77MS4 setting example				QD77MS16 setting example				Setting details
				Axis 1 (reference axis)	Axis 2 (interpolation axis)	Axis 3 (interpolation axis)	Axis 4 (interpolation axis)	Axis 1 (reference axis)	Axis 2 (interpolation axis)	Axis 3 (interpolation axis)	Axis 4 (interpolation axis)	
Axis 1 Positioning data No. 1	[Da.1]	Operation pattern		Positioning complete	–	–	–	Positioning complete	–	–	–	Setting other than "Positioning complete" is not possible in speed control.
	[Da.2]	Control method		Forward run speed 4	–	–	–	Forward run speed 4	–	–	–	Set 4-axis speed control.
	[Da.3]	Acceleration time No.		1	–	–	–	1	–	–	–	Designate the value set in "[Pr.25] Acceleration time 1" as the acceleration time at start.
	[Da.4]	Deceleration time No.		0	–	–	–	0	–	–	–	Designate the value set in "[Pr.10] Deceleration time 0" as the deceleration time at deceleration.
	[Da.5]	Axis to be interpolated QD77MS4		–	–	–	–					Setting not required (setting value is ignored). When axis 1 is used as a reference axis, the interpolation axes are axes 2, 3 and 4.
	[Da.6]	Positioning address/ movement amount		–	–	–	–	–	–	–	–	Setting not required (setting value is ignored).
	[Da.7]	Arc address		–	–	–	–	–	–	–	–	
	[Da.8]	Command speed		6000.00 mm/min	3000.00 mm/min	2000.00 mm/min	1000.00 mm/min	6000.00 mm/min	3000.00 mm/min	2000.00 mm/min	1000.00 mm/min	Set the speed to be commanded.
	[Da.9]	Dwell time/JUMP destination positioning data No.		–	–	–	–	–	–	–	–	Setting not required (setting value is ignored).
	[Da.10]	M code/Condition data No./Number of LOOP to LEND repetitions		10	–	–	–	10	–	–	–	Set this when other sub operation commands are issued in combination with the No. 1 positioning data. ("[Pr.18] M code ON signal output timing" setting only possible in the WITH mode.)
	[Da.20]	Axis to be interpolated No.1 QD77MS16						Axis 2	–	–	–	Set the axis to be interpolated. If the self-axis is set, an error will occur.
	[Da.21]	Axis to be interpolated No.2 QD77MS16						Axis 3	–	–	–	
	[Da.22]	Axis to be interpolated No.3 QD77MS16						Axis 4	–	–	–	

(Note): Refer to Section 5.3 "List of positioning data" for information on the setting details.

9.2.16 Speed-position switching control (INC mode)

In "speed-position switching control (INC mode)" ("[Da.2] Control method" = Forward run: speed/position, Reverse run: speed/position), the pulses of the speed set in "[Da.8] Command speed" are kept output on the axial direction set to the positioning data. When the "speed-position switching signal" is input, position control of the movement amount set in "[Da.6] Positioning address/movement amount" is exercised.

"Speed-position switching control (INC mode)" is available in two different types: "forward run: speed/position" which starts the axis in the forward run direction and "reverse run: speed/position" which starts the axis in the reverse run direction.

Use the detailed parameter 1 "[Pr.81] Speed-position function selection" with regard to the choice for "speed-position switching control (INC mode)".

Setting item		Setting value	Setting details	Buffer memory address	
				QD77MS2 QD77MS4	QD77MS16
[Pr.81]	Speed-position function selection	0	Speed-position switching control (INC mode)	34+150n	

(Note): If the set value is other than 0 and 2, it is regarded as 0 and operation is performed in the INC mode. For details of the setting, refer to Section 5.2 "List of parameters".

■ Switching over from speed control to position control

(1) The control is selected the switching method from speed control to position control by the setting value of "[Cd.45] Speed-position switching device selection".

Setting item		Setting value	Setting details	Buffer memory address	
				QD77MS2 QD77MS4	QD77MS16
[Cd.45]	Speed-position switching device selection	→	The device used for speed-position switching is selected. 0: Use the external command signal for switching from speed control to position control 1: Use the proximity signal for switching from speed control to position control 2: Use the "[Cd.46] Speed-position switching command" for switching from speed control to position control	1566+100n	4366+100n

The switching is performed by using the following device when "2" is set.

Setting item		Setting value	Setting details	Buffer memory address	
				QD77MS2 QD77MS4	QD77MS16
[Cd.46]	Speed-position switching command	1	1: Switch from speed control to position control	1567+100n	4367+100n

(2) "[Cd.24] Speed-position switching enable flag" must be turned ON to switch over from speed control to position control. (If the "[Cd.24] Speed-position switching enable flag" turns ON after the speed-position switching signal turns ON, the control will continue as speed control without switching over to position control. The control will be switched over from position control to speed control when the speed-position switching signal turns from OFF to ON again. Only position control will be carried out when the "[Cd.24] Speed-position switching enable flag" and speed-position switching signal are ON at the operation start.)

Setting item		Setting value	Setting details	Buffer memory address	
				QD77MS2 QD77MS4	QD77MS16
[Cd.24]	Speed-position switching enable flag	1	Speed control will be taken over by position control when the external command signal [DI] comes ON.	1528+100n	4328+100n

■ Operation chart

The following chart (Fig.9.13) shows the operation timing for speed-position switching control (INC mode). The "in speed control flag" ([Md.31] Status: b0) is turned ON during speed control of speed-position switching control (INC mode).

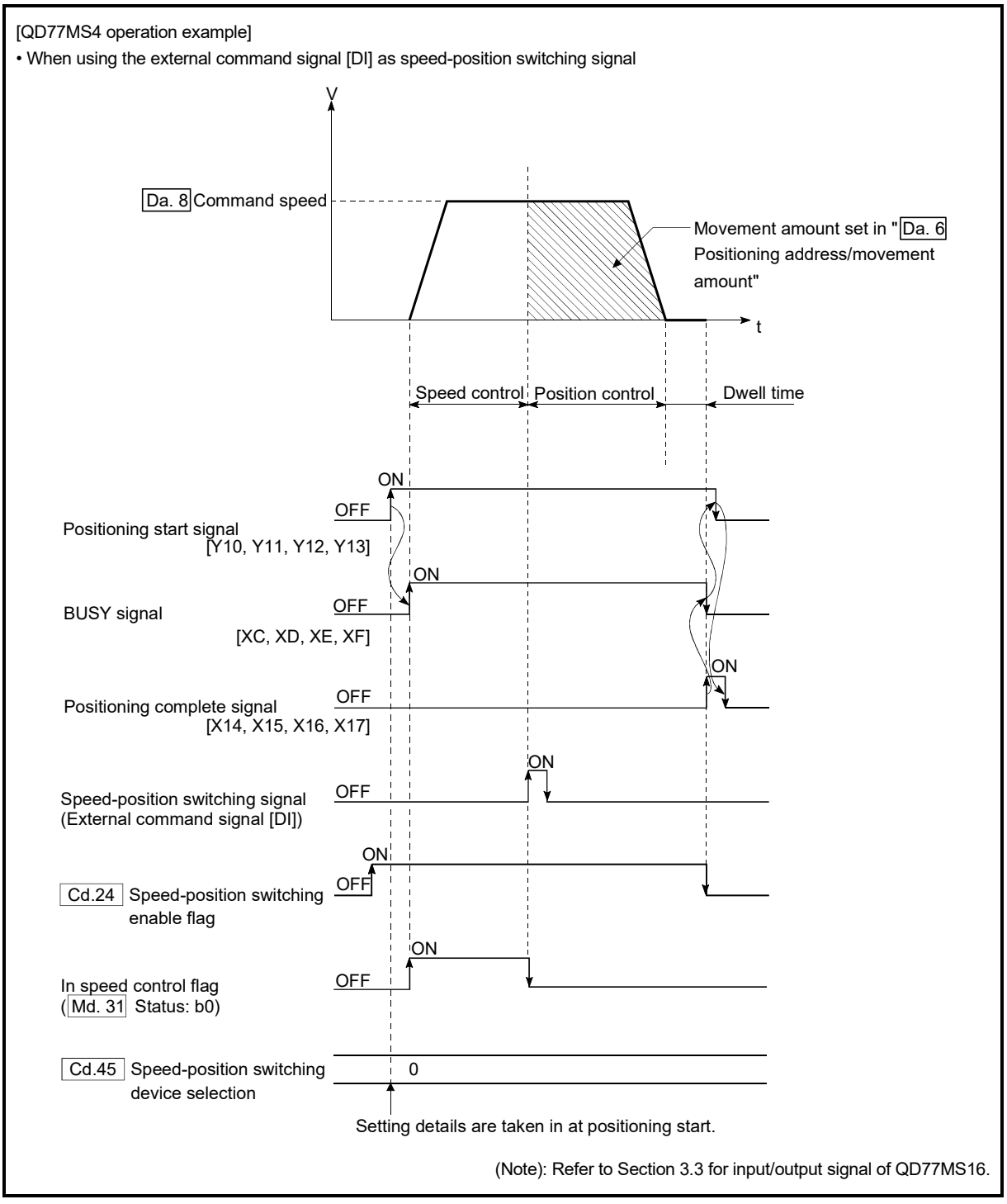

Fig. 9.13 Speed-position switching control (INC mode) operation timing

[Operation example]

The following operation assumes that the speed-position switching signal is input at the position of the command position value of 90.00000 [degree] during execution of "[Da.2] Control method" "Forward run: speed/
position" at "[Pr.1] Unit setting" of "2: degree" and "[Pr.21] Command position value during speed control" setting of "1: Update command position value".
(The value set in "[Da.6] Positioning address/movement amount" is 270.00000 [degree])

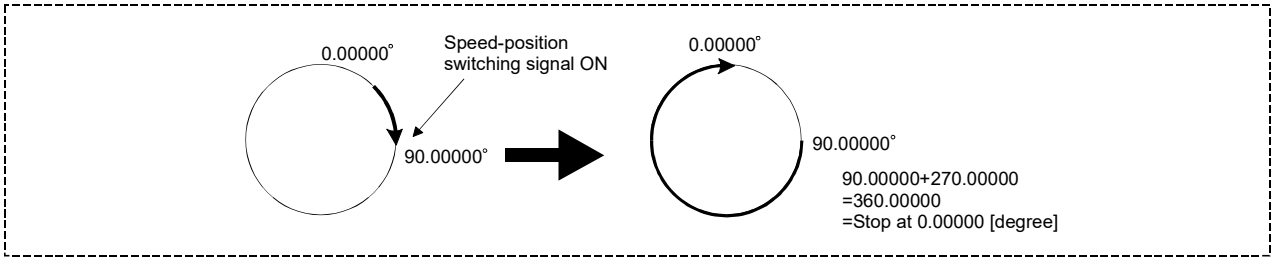

■ Operation timing and processing time during speed-position switching control (INC mode)

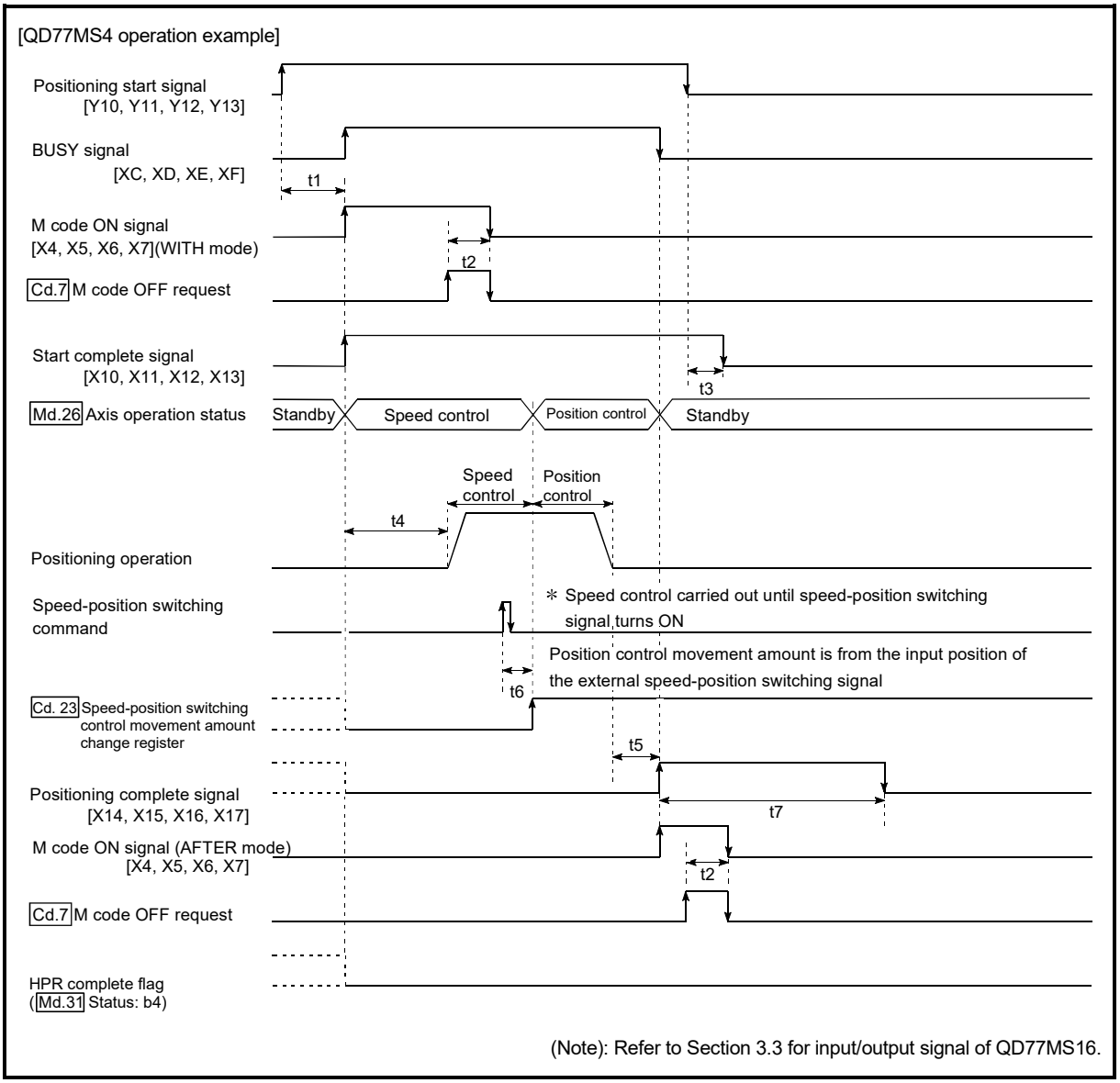

Fig. 9.14 Operation timing and processing time during speed-position switching control (INC mode)

Normal timing time Unit: [ms]

	Operation cycle	t1	t2	t3	t4	t5	t6	t7
QD77MS2	0.88	0.2 to 0.3	0 to 0.9	0 to 0.9	1.8 to 2.7	0 to 0.9	0.2	Follows parameters
	1.77	0.2 to 0.3	0 to 1.8	0 to 1.8	2.5 to 3.9	0 to 1.8	0.2	Follows parameters
QD77MS4	0.88	0.2 to 0.3	0 to 0.9	0 to 0.9	1.8 to 2.7	0 to 0.9	0.2	Follows parameters
	1.77	0.2 to 0.3	0 to 1.8	0 to 1.8	2.5 to 3.9	0 to 1.8	0.2	Follows parameters
QD77MS16	0.88	0.3 to 1.4	0 to 0.9	0 to 0.9	1.8 to 2.7	0 to 0.9	0.2	Follows parameters
	1.77	0.3 to 1.4	0 to 1.8	0 to 1.8	3.2 to 3.9	0 to 1.8	0.2	Follows parameters

- The t1 timing time could be delayed by the operation state of other axes.
- When using the proximity dog signal or "[Cd.46] Speed-position switching command", the t6 timing time could be delayed or vary influenced by the PLC scan time or communication with servo amplifier.

■ Command position value during speed-position switching control (INC mode)

The following table shows the "[Md.20] Command position value" during speed-position switching control (INC mode) corresponding to the "[Pr.21] Command position value during speed control" settings.

"[Pr.21] Command position value during speed control" setting	[Md.20] Command position value
0: Do not update command position value	The command position value at control start is maintained during speed control, and updated from the switching to position control.
1: Update command position value	The command position value is updated during speed control and position control.
2: Zero clear command position value	The command position value is cleared (set to "0") at control start, and updated from the switching to position control.

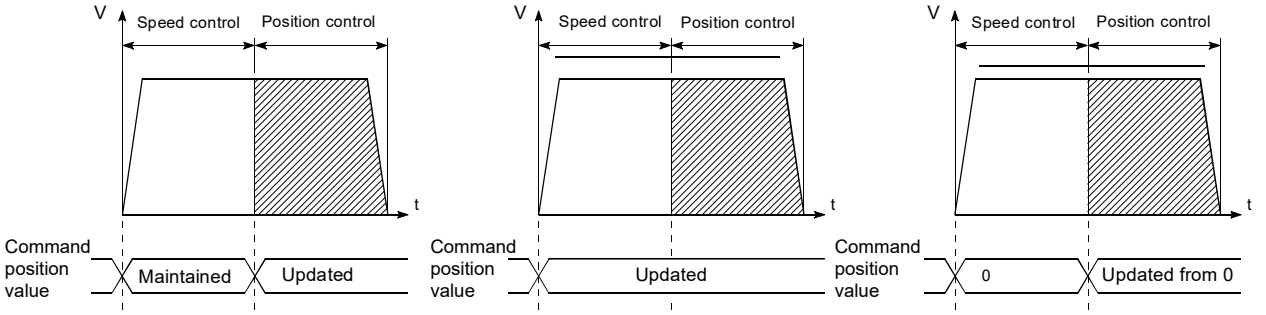

(a) Command position value not updated (b) Command position value updated (c) Command position value zero cleared

■ Switching time from speed control to position control

There is 1ms from the time the speed-position switching signal is turned ON to the time the speed-position switching latch flag ([Md.31] Status: b1) turns ON.

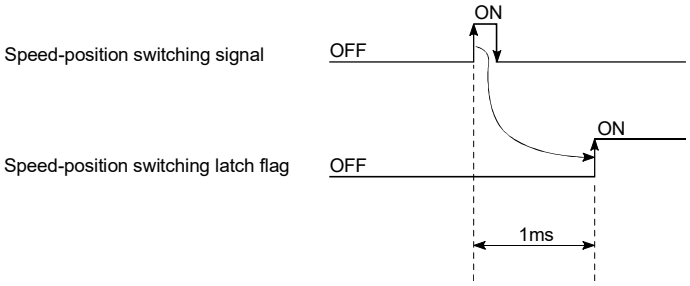

■ Speed-position switching signal setting

(1) The following table shows the items that must be set to use the external command signals [DI] as speed-position switching signals.

Setting item		Setting value	Setting details	Buffer memory address	
				QD77MS2 QD77MS4	QD77MS16
[Pr.42]	External command function selection	2	Speed-position, position-speed switching request.	62+150n	
[Cd.8]	External command valid	1	Validates an external command.	1505+100n	4305+100n
[Cd.45]	Speed-position switching device selection	0	Use the external command signal for switching from speed control to position control.	1566+100n	4366+100n

(Note): Set the external command signal [DI] in "[Pr.95] External command signal selection" at QD77MS16 use. Refer to Section 5.2 "List of parameters" and Section 5.7 "List of control data" for information on the setting details.

(2) The following table shows the items that must be set to use the proximity dog signal (DOG) as speed-position switching signals.

Setting item		Setting value	Setting details	Buffer memory address	
				QD77MS2 QD77MS4	QD77MS16
[Cd.45]	Speed-position switching device selection	1	Use the proximity dog signal for switching from speed control to position control	1566+100n	4366+100n

(Note): The setting is not required for "[Pr.42] External command function selection" and "[Cd.8] External command valid".
Refer to Section 5.7 "List of control data" for information on the setting details.

(3) The following table shows the items that must be set to use "[Cd.46] Speed-position switching command" as speed-position switching signals.

Setting item		Setting value	Setting details	Buffer memory address	
				QD77MS2 QD77MS4	QD77MS16
[Cd.45]	Speed-position switching device selection	2	Use the "[Cd.46] Speed-position switching command" for switching from speed control to position control	1566+100n	4366+100n

(Note): The setting is not required for "[Pr.42] External command function selection" and "[Cd.8] External command valid".
Refer to Section 5.7 "List of control data" for information on the setting details.

■ Changing the position control movement amount

In "speed-position switching control (INC mode)", the position control movement amount can be changed during the speed control section.

(1) The position control movement amount can be changed during the speed control section of speed-position switching control (INC mode).
A movement amount change request will be ignored unless issued during the speed control section of the speed-position switching control (INC mode).

(2) The "new movement amount" is stored in "[Cd.23] Speed-position switching control movement amount change register" by the sequence program during speed control.
When the speed-position switching signal is turned ON, the movement amount for position control is stored in "[Cd.23] Speed-position switching control movement amount change register".

(3) The movement amount is stored in the "[Md.29] Speed-position switching control positioning movement amount" of the axis monitor area from the point where the control changes to position control by the input of a speed-position switching signal from an external device.

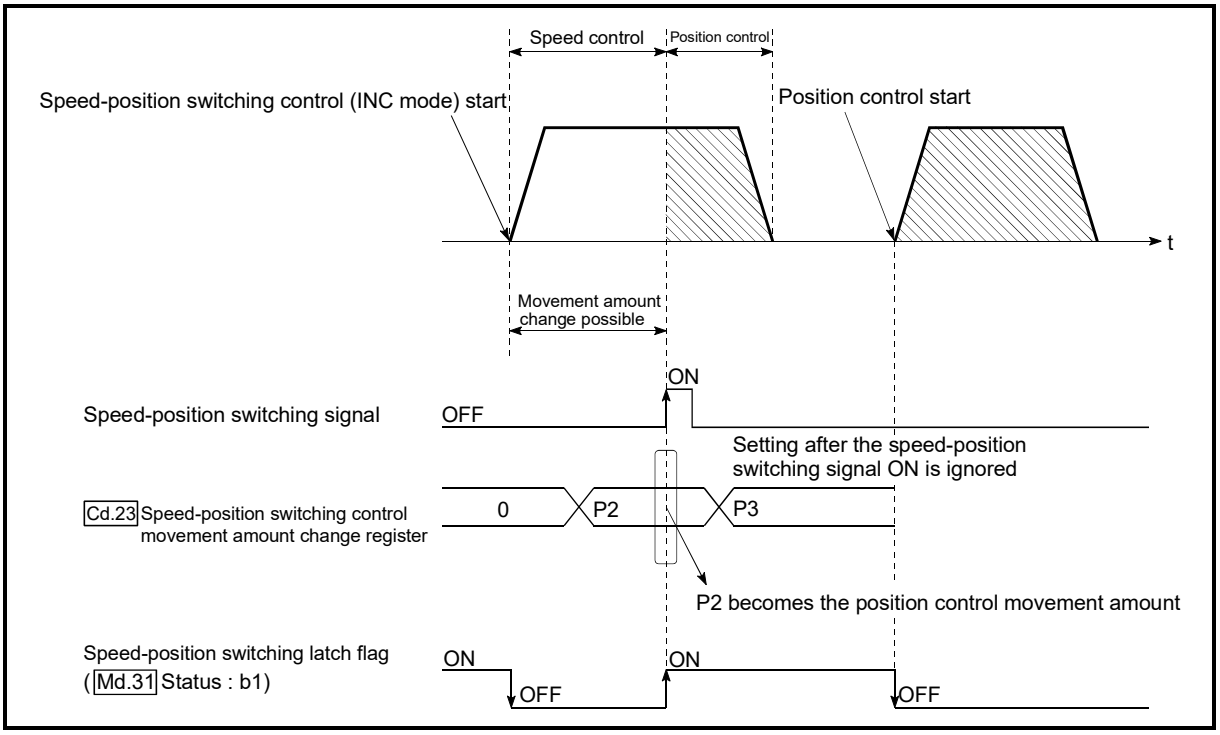

Fig. 9.15 Position control movement amount change timing

POINT

- The machine recognizes the presence of a movement amount change request when the data is written to "[Cd.23] Speed-position switching control movement amount change register" with the sequence program.
- The new movement amount is validated after execution of the speed-position switching control (INC mode), before the input of the speed-position switching signal.
- The movement amount change can be enable/disable with the interlock function in position control using the "speed-position switching latch flag" ([Md.31] Status: b1) of the axis monitor area.

Restrictions

(1) The error "Continuous path control not possible" (error code: 516) will occur and the operation cannot start if "continuous positioning control" or "continuous path control" is set in "[Da.1] Operation pattern".

(2) "Speed-position switching control" cannot be set in "[Da.2] Control method" of the positioning data when "continuous path control" has been set in "[Da.1] Operation pattern" of the immediately prior positioning data. (For example, if the operation pattern of positioning data No. 1 is "continuous path control", "speed-position switching control" cannot be set in positioning data No. 2.) The error "Continuous path control not possible" (error code: 516) will occur and the machine will carry out a deceleration stop if this type of setting is carried out.

(3) The error "No command speed" (error code: 503) will occur if "current speed (-1)" is set in "[Da.8] Command speed".

(4) The software stroke limit range check during speed control is made only when the following (a) and (b) are satisfied:
(a) "[Pr.21] Command position value during speed control" is "1: Update command position value".
If the movement amount exceeds the software stroke limit range during speed control in case of the setting of other than "1: Update command position value", the error "Software stroke limit +" (error code: 507) or "Software stroke limit -" (error code: 508) will occur as soon as speed control is changed to position control and the axis will decelerate to a stop.
(b) When "[Pr.1] Unit setting" is other than "2: degree"
If the unit is "degree", the software stroke limit range check is not performed.

(5) If the value set in "[Da.6] Positioning address/movement amount" is negative, the error "Outside address range" (error code: 530) will occur.

(6) Deceleration processing is carried out from the point where the speed-position switching signal is input if the position control movement amount set in "[Da.6] Positioning address/movement amount" is smaller than the deceleration distance from the "[Da.8] Command speed".

(7) Turn ON the speed-position switching signal in the speed stabilization region (constant speed status). When the switching signal is turned ON while the speed does not reach the command speed, deviation in the stop position may occur because of large deviation in the droop pulse amount.
During use of the servo motor, the movement amount is "[Da.6] Positioning address/movement amount" from the assumed motor position based on "[Md.101] Actual position value" at switching of speed control to position control. Therefore, if the signal is turned ON during acceleration/deceleration, the stop position will vary due to large variation of the droop pulse amount. Even though "[Md.29] Speed-position switching control positioning movement amount" is the same, the stop position will change due to a change in droop pulse amount when "[Da.8] Command speed" is different.

■ Positioning data setting examples

[When "speed-position switching control (INC mode) by forward run" is set in positioning data No. 1 of axis 1]

Setting item			Setting example		Setting details
			QD77MS2 QD77MS4	QD77MS16	
Axis 1 Positioning data No. 1	[Da.1]	Operation pattern	Positioning complete		Set "Positioning complete" assuming the next positioning data will not be executed. ("Continuous path control" cannot be set in "speed-position switching control (INC mode)".)
	[Da.2]	Control method	Forward run: speed/position		Set speed-position switching control by forward run.
	[Da.3]	Acceleration time No.	1		Designate the value set in "[Pr.25] Acceleration time 1" as the acceleration time at start.
	[Da.4]	Deceleration time No.	0		Designate the value set in "[Pr.10] Deceleration time 0" as the deceleration time at deceleration.
	[Da.5]	Axis to be interpolated QD77MS2 QD77MS4	–		Setting not required. (Setting value is ignored.)
	[Da.6]	Positioning address/ movement amount	10000.0μm		INC mode ([Pr.81] = 0) Set the movement amount after the switching to position control. (Assuming that the "[Pr.1] Unit setting" is set to "mm".)
	[Da.7]	Arc address	–		Setting not required. (Setting value is ignored.)
	[Da.8]	Command speed	6000.00mm/min		Set the speed to be controlled.
	[Da.9]	Dwell time/JUMP destination positioning data No.	500ms		Set a time from the positioning stop (command stop) by position control until the positioning complete signal is output. When the system is stopped by speed control, ignore the setting value.
	[Da.10]	M code/Condition data No./Number of LOOP to LEND repetitions	10		Set this when other sub operation commands are issued in combination with the No.1 positioning data.
	[Da.20]	Axis to be interpolated No.1 QD77MS16		–	Setting not required (setting value is ignored).
	[Da.21]	Axis to be interpolated No.2 QD77MS16		–	
	[Da.22]	Axis to be interpolated No.3 QD77MS16		–	

(Note): Refer to Section 5.3 "List of positioning data" for information on the setting details.

9.2.17 Speed-position switching control (ABS mode)

In case of "speed-position switching control (ABS mode)" ("[Da.2] Control method" = Forward run: speed/position, Reverse run: speed/position), the pulses of the speed set in "[Da.8] Command speed" are kept output in the axial direction set to the positioning data. When the "speed-position switching signal" is input, position control to the address set in "[Da.6] Positioning address/movement amount" is exercised.

"Speed-position switching control (ABS mode)" is available in two different types: "forward run: speed/position" which starts the axis in the forward run direction and "reverse run: speed/position" which starts the axis in the reverse run direction.

"Speed-position switching control (ABS mode)" is valid only when "[Pr.1] Unit setting" is "2: degree".

[Pr.1] Unit setting / Speed-position function selection	mm	inch	degree	PLS
INC mode	○	○	○	○
ABS mode	×	×	○	×

○: Setting allowed,

×: Setting disallowed (If setting is made, the error "Speed-position function selection error" (error code: 935) will occur when the PLC READY signal [Y0] turns ON.)

Use the detailed parameter 1 "[Pr.81] Speed-position function selection" to choose "speed-position switching control (ABS mode)".

Setting item		Setting value	Setting details	Buffer memory address	
				QD77MS2 QD77MS4	QD77MS16
[Pr.81]	Speed-position function selection	2	Speed-position switching control (ABS mode)	34+150n	

(Note): If the set value is other than 0 and 2, it is regarded as 0 and operation is performed in the INC mode.
For details of the setting, refer to Section 5.2 "List of parameters".

■ Switching over from speed control to position control

(1) The control is selected the switching method from speed control to position control by the setting value of "[Cd.45] Speed-position switching device selection".

Setting item		Setting value	Setting details	Buffer memory address	
				QD77MS2 QD77MS4	QD77MS16
[Cd.45]	Speed-position switching device selection	→	The device used for speed-position switching is selected. 0: Use the external command signal for switching from speed control to position control 1: Use the proximity signal for switching from speed control to position control 2: Use the "[Cd.46] Speed-position switching command" for switching from speed control to position control	1566+100n	4366+100n

The switching is performed by using the following device when "2" is set.

Setting item		Setting value	Setting details	Buffer memory address	
				QD77MS2 QD77MS4	QD77MS16
[Cd.46]	Speed-position switching command	1	1: Switch from speed control to position control	1567+100n	4367+100n

(2) "[Cd.24] Speed-position switching enable flag" must be turned ON to switch over from speed control to position control. (If the "[Cd.24] Speed-position switching enable flag" turns ON after the speed-position switching signal turns ON, the control will continue as speed control without switching over to position control. The control will be switched over from speed control to position control when the speed-position switching signal turns from OFF to ON again. Only position control will be carried out when the "[Cd.24] Speed-position switching enable flag" and speed-position switching signal are ON at the operation start.)

Setting item		Setting value	Setting details	Buffer memory address	
				QD77MS2 QD77MS4	QD77MS16
[Cd.24]	Speed-position switching enable flag	1	Speed control will be taken over by position control when the external command signal [DI] comes ON.	1528+100n	4328+100n

■ Operation chart

The following chart (Fig.9.16) shows the operation timing for speed-position switching control (ABS mode). The "in speed control flag" ([Md.31] Status: b0) is turned ON during speed control of speed-position switching control (ABS mode).

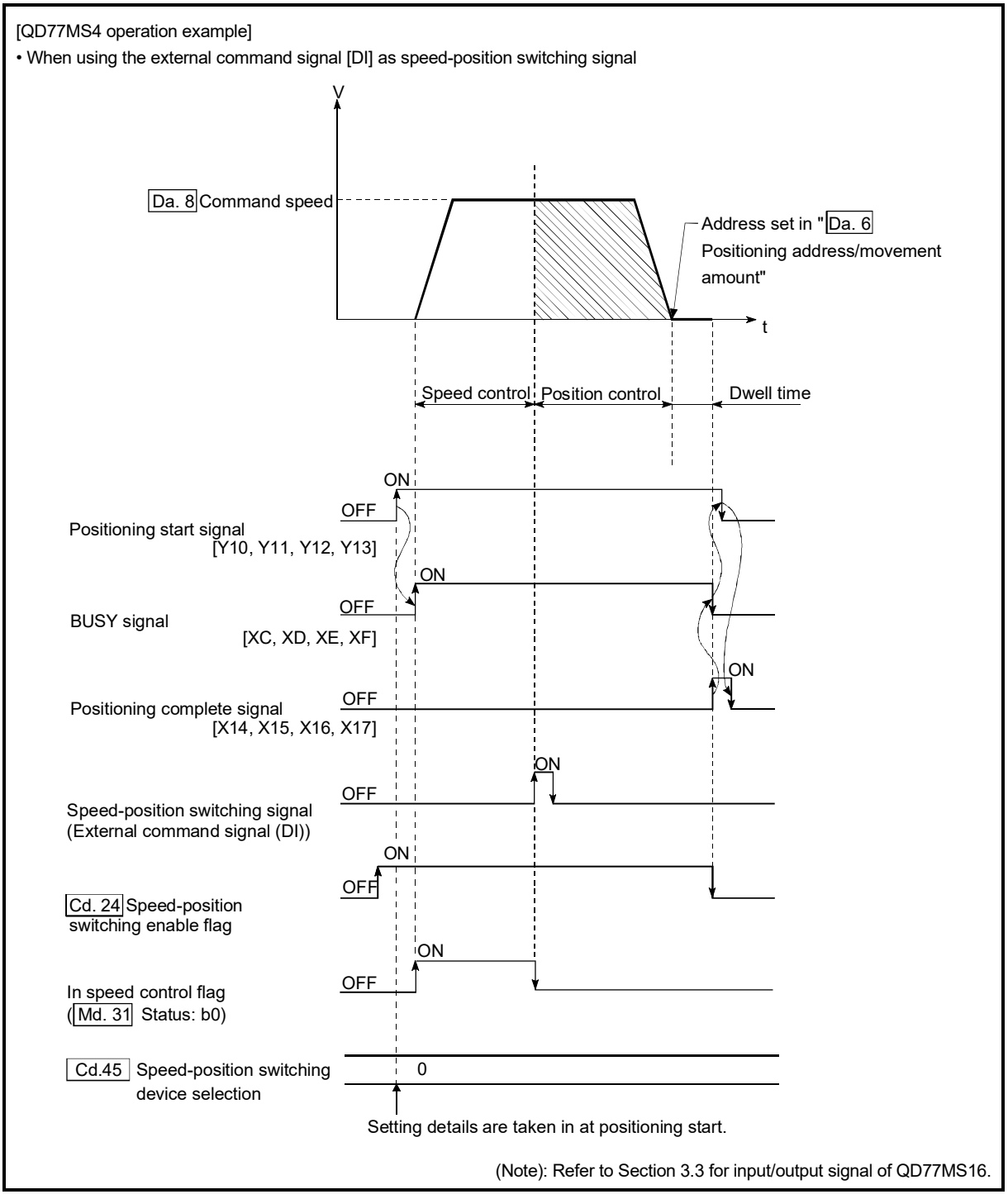

Fig. 9.16 Speed-position switching control (ABS mode) operation timing

[Operation example]

The following operation assumes that the speed-position switching signal is input at the position of the command position value of 90.00000 [degree] during execution of "[Da.2] Control method" "Forward run: speed/position" at "[Pr.1] Unit setting" of "2: degree" and "[Pr.21] Command position value during speed control" setting of "1: Update command position value".
(The value set in "[Da.6] Positioning address/movement amount" is 270.00000 [degree])

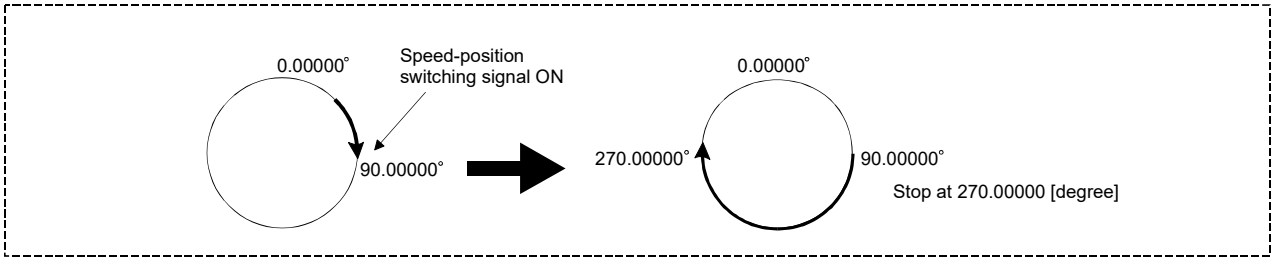

■ Operation timing and processing time during speed-position switching control (ABS mode)

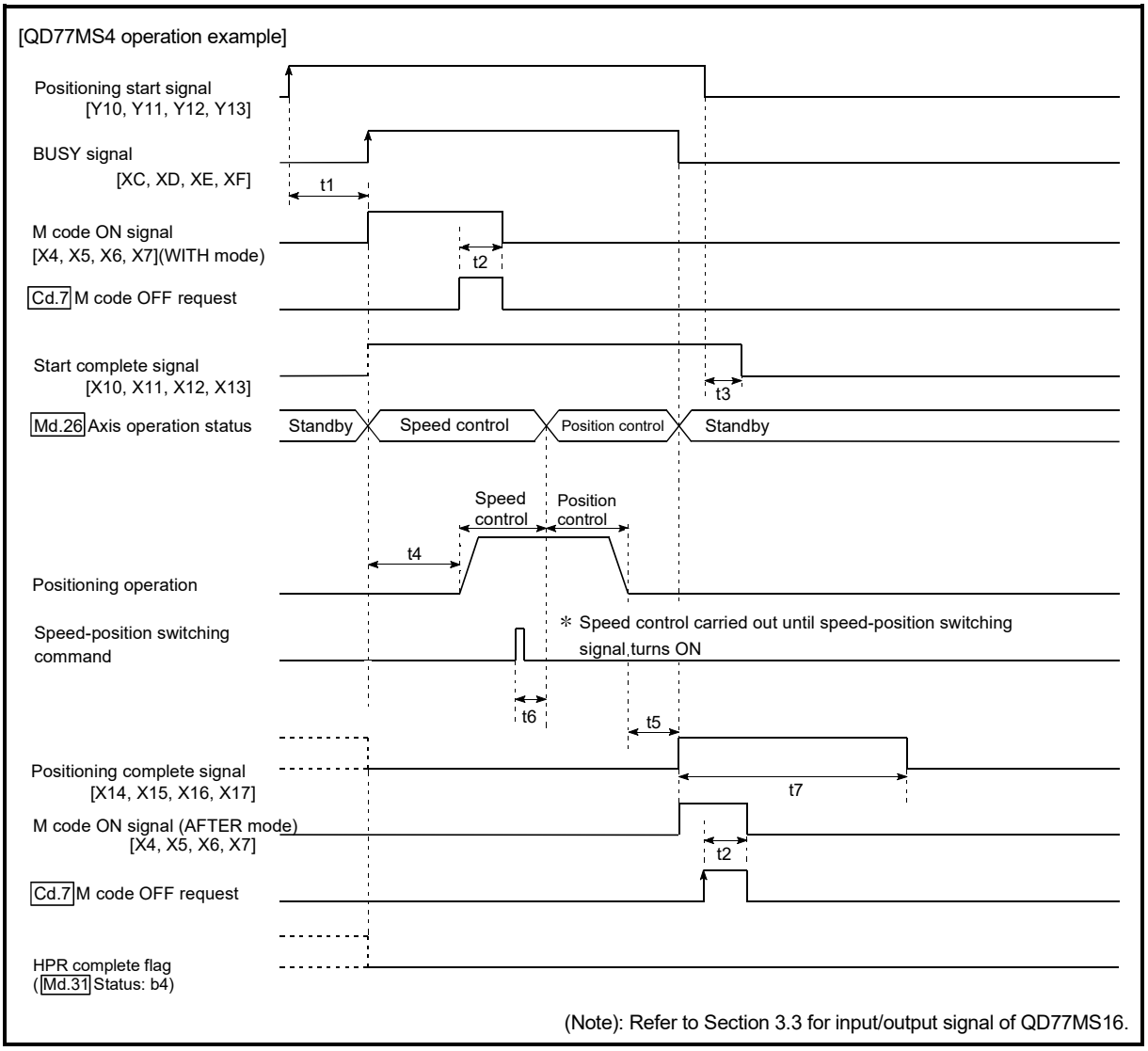

Fig. 9.17 Operation timing and processing time during speed-position switching control (ABS mode)

Normal timing time Unit: [ms]

	Operation cycle	t1	t2	t3	t4	t5	t6	t7
QD77MS2	0.88	0.2 to 0.3	0 to 0.9	0 to 0.9	1.8 to 2.7	0 to 0.9	0.2	Follows parameters
	1.77	0.2 to 0.3	0 to 1.8	0 to 1.8	2.5 to 3.9	0 to 1.8	0.2	Follows parameters
QD77MS4	0.88	0.2 to 0.3	0 to 0.9	0 to 0.9	1.8 to 2.7	0 to 0.9	0.2	Follows parameters
	1.77	0.2 to 0.3	0 to 1.8	0 to 1.8	2.5 to 3.9	0 to 1.8	0.2	Follows parameters
QD77MS16	0.88	0.3 to 1.4	0 to 0.9	0 to 0.9	1.8 to 2.7	0 to 0.9	0.2	Follows parameters
	1.77	0.3 to 1.4	0 to 1.8	0 to 1.8	3.2 to 3.9	0 to 1.8	0.2	Follows parameters

- The t1 timing time could be delayed by the operation state of other axes.
- When using the proximity dog signal and "[Cd.46] Speed-position switching command", the t6 timing time could be delayed or vary influenced by the PLC scan time or communication with servo amplifier.

■ Command position value during speed-position switching control (ABS mode)

The following table shows the "[Md.20] Command position value" during speed-position switching control (ABS mode) corresponding to the "[Pr.21] Command position value during speed control" settings.

"[Pr.21] Command position value during speed control" setting	[Md.20] Command position value
1: Update command position value	The command position value is updated during speed control and position control.

Only "1: Update command position value" is valid for the setting of "[Pr.21] Command position value during speed control" in speed-position switching control (ABS mode).
The error "Speed-position function selection error" (error code: 935) will occur if the "[Pr.21] Command position value during speed control" setting is other than 1.

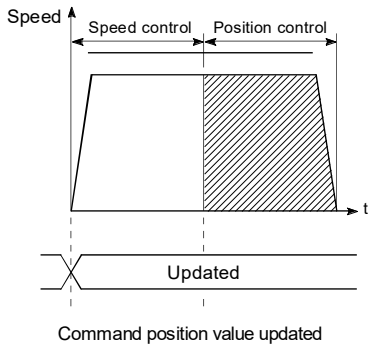

■ Switching time from speed control to position control

There is 1ms from the time the speed-position switching signal is turned ON to the time the speed-position switching latch flag ([Md.31] Status: b1) turns ON.

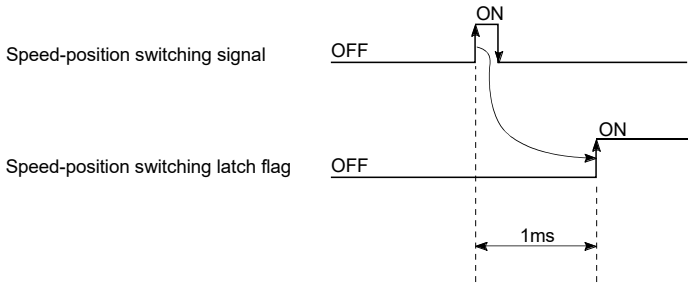

■ Speed-position switching signal setting

(1) The following table shows the items that must be set to use the external command signals [DI] as speed-position switching signals.

Setting item		Setting value	Setting details	Buffer memory address	
				QD77MS2 QD77MS4	QD77MS16
[Pr.42]	External command function selection	2	Speed-position, position-speed switching request.	62+150n	
[Cd.8]	External command valid	1	Validates an external command.	1505+100n	4305+100n
[Cd.45]	Speed-position switching device selection	0	Use the external command signal for switching from speed control to position control.	1566+100n	4366+100n

(Note): Set the external command signal [DI] in "[Pr.95] External command signal selection" at QD77MS16 use.
Refer to Section 5.2 "List of parameters" and Section 5.7 "List of control data" for information on the setting details.

(2) The following table shows the items that must be set to use the proximity dog signal (DOG) as speed-position switching signals.

Setting item		Setting value	Setting details	Buffer memory address	
				QD77MS2 QD77MS4	QD77MS16
[Cd.45]	Speed-position switching device selection	1	Use the proximity dog signal for switching from speed control to position control.	1566+100n	4366+100n

(Note): The setting is not required for "[Pr.42] External command function selection" and "[Cd.8] External command valid".
Refer to Section 5.7 "List of control data" for information on the setting details.

(3) The following table shows the items that must be set to use "[Cd.46] Speed-position switching command" as speed-position switching signals.

Setting item		Setting value	Setting details	Buffer memory address	
				QD77MS2 QD77MS4	QD77MS16
[Cd.45]	Speed-position switching device selection	2	Use the "[Cd.46] Speed-position switching command" for switching from speed control to position control.	1566+100n	4366+100n

(Note): The setting is not required for "[Pr.42] External command function selection" and "[Cd.8] External command valid".
Refer to Section 5.7 "List of control data" for information on the setting details.

Restrictions

(1) The error "Continuous path control not possible" (error code: 516) will occur and the operation cannot start if "continuous positioning control" or "continuous path control" is set in "[Da.1] Operation pattern".

(2) "Speed-position switching control" cannot be set in "[Da.2] Control method" of the positioning data when "continuous path control" has been set in "[Da.1] Operation pattern" of the immediately prior positioning data. (For example, if the operation pattern of positioning data No. 1 is "continuous path control", "speed-position switching control" cannot be set in positioning data No. 2.) The error "Continuous path control not possible" (error code: 516) will occur and the machine will carry out a deceleration stop if this type of setting is carried out.

(3) The error "No command speed" (error code: 503) will occur if "current speed (-1)" is set in "[Da.8] Command speed".

(4) If the value set in "[Da.6] Positioning address/movement amount" is negative, the error "Outside address range" (error code: 530) will occur.

(5) Even though the axis control data "[Cd.23] Speed-position switching control movement amount change register" was set in speed-position switching control (ABS mode), it would not function. The set value is ignored.

(6) To exercise speed-position switching control (ABS mode), the following conditions must be satisfied:
(a) "[Pr.1] Unit setting" is "2: degree"
(b) The software stroke limit function is invalid (upper limit value = lower limit value)
(c) "[Pr.21] Command position value during speed control" is "1: Update command position value"
(d) The "[Da.6] Positioning address/movement amount" setting range is 0 to 359.99999 (degree)
If the value is outside of the range 0 to 359.99999 (degree), the error "Outside address range" (error code: 530) will occur at a start.
(e) The "[Pr.81] Speed-position function selection" setting is "2: Speed-position switching control (ABS mode)".

(7) If any of the conditions in (6) (a) to (6) (c) is not satisfied in the case of (6) (e), the error "Speed-position function selection error" (error code: 935) will occur when the PLC READY signal [Y0] turns from OFF to ON.

(8) If the axis reaches the positioning address midway through deceleration after automatic deceleration started at the input of the speed-position switching signal, the axis will not stop immediately at the positioning address. The axis will stop at the positioning address after N revolutions so that automatic deceleration can always be made. (N: Natural number)
In the following example, since making deceleration in the path of dotted line will cause the axis to exceed the positioning addresses twice, the axis will decelerate to a stop at the third positioning address.

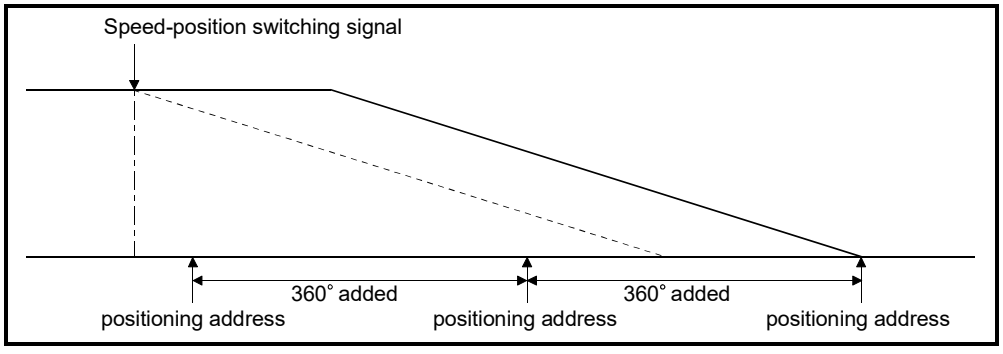

■ Positioning data setting examples

[When "speed-position switching control (ABS mode) by forward run" is set in positioning data No. 1 of axis 1]

Setting item			Setting example		Setting details
			QD77MS2 QD77MS4	QD77MS16	
Axis 1 Positioning data No. 1	[Da.1]	Operation pattern	Positioning complete		Set "Positioning complete" assuming the next positioning data will not be executed. ("Continuous path control" cannot be set in "speed-position switching control (ABS mode)".)
	[Da.2]	Control method	Forward run: speed/position		Set speed-position switching control by forward run.
	[Da.3]	Acceleration time No.	1		Designate the value set in "[Pr.25] Acceleration time 1" as the acceleration time at start.
	[Da.4]	Deceleration time No.	0		Designate the value set in "[Pr.10] Deceleration time 0" as the deceleration time at deceleration.
	[Da.5]	Axis to be interpolated QD77MS2 QD77MS4	–		Setting not required. (Setting value is ignored.)
	[Da.6]	Positioning address/ movement amount	270.00000degree		ABS mode ([Pr.81] = 2) Set the address after the switching to position control. (Assuming that the "[Pr.1] Unit setting" is set to "degree".)
	[Da.7]	Arc address	–		Setting not required. (Setting value is ignored.)
	[Da.8]	Command speed	6000.000degree/min		Set the speed to be controlled.
	[Da.9]	Dwell time/JUMP destination positioning data No.	500ms		Set a time from the positioning stop (command stop) by position control until the positioning complete signal is output. When the system is stopped by speed control, ignore the setting value.
	[Da.10]	M code/Condition data No./Number of LOOP to LEND repetitions	10		Set this when other sub operation commands are issued in combination with the No. 1 positioning data.
	[Da.20]	Axis to be interpolated No.1 QD77MS16		–	Setting not required (setting value is ignored).
	[Da.21]	Axis to be interpolated No.2 QD77MS16		–	
	[Da.22]	Axis to be interpolated No.3 QD77MS16		–	

(Note): Refer to Section 5.3 "List of positioning data" for information on the setting details.

9.2.18 Position-speed switching control

In "position-speed switching control" ("[Da.2] Control method" = Forward run: position/speed, Reverse run: position/speed), before the position-speed switching signal is input, position control is carried out for the movement amount set in "[Da.6] Positioning address/movement amount" in the axis direction in which the positioning data has been set. When the position-speed switching signal is input, the position control is carried out by continuously outputting the pulses for the speed set in "[Da.8] Command speed" until the input of a stop command.
The two types of position-speed switching control are "Forward run: position/speed" in which the control starts in the forward run direction, and "Reverse run: position/speed" in which control starts in the reverse run direction.

■ Switching over from position control to speed control

(1) The control is selected the switching method from position control to speed control by the setting value of "[Cd.45] Speed-position switching device selection".

Setting item		Setting value	Setting details	Buffer memory address	
				QD77MS2 QD77MS4	QD77MS16
[Cd.45]	Speed-position switching device selection	→	The device used for speed-position switching is selected. 0: Use the external command signal for switching from position control to speed control 1: Use the proximity signal for switching from position control to speed control 2: Use the "[Cd.46] Speed-position switching command" for switching from position control to speed control	1566+100n	4366+100n

The switching is performed by using the following device when "2" is set.

Setting item		Setting value	Setting details	Buffer memory address	
				QD77MS2 QD77MS4	QD77MS16
[Cd.46]	Speed-position switching command	1	1: Switch from position control to speed control	1567+100n	4367+100n

(2) "[Cd.26] Position-speed switching enable flag" must be turned ON to switch over from position control to speed control. (If the "[Cd.26] Position-speed switching enable flag" turns ON after the position-speed switching signal turns ON, the control will continue as position control without switching over to speed control. The control will be switched over from position control to speed control when the position-speed switching signal turns from OFF to ON again. Only speed control will be carried out when the "[Cd.26] Position-speed switching enable flag" and position-speed switching signal are ON at the operation start.)

Setting item		Setting value	Setting details	Buffer memory address	
				QD77MS2 QD77MS4	QD77MS16
[Cd.26]	Position-speed switching enable flag	1	Position control will be taken over by speed control when the external command signal [DI] comes ON.	1532+100n	4332+100n

■ Operation chart

The following chart shows the operation timing for position-speed switching control. The "in speed control" flag ([Md.31] Status: b0) is turned ON during speed control of position-speed switching control.

[QD77MS4 operation example]

• When using the external command signal [DI] as position-speed switching signal

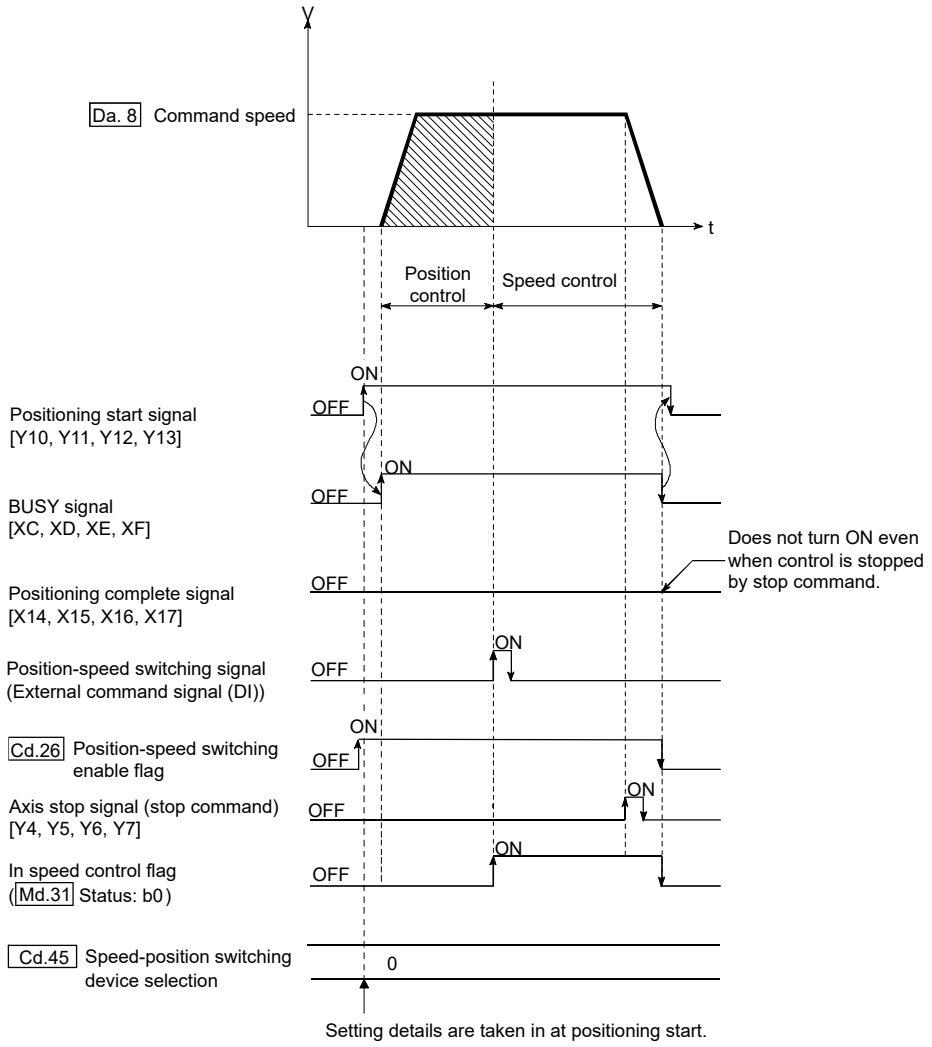

(Note): Refer to Section 3.3 for input/output signal of QD77MS16.

Fig. 9.18 Position-speed switching control operation timing

■ Operation timing and processing time during position-speed switching control

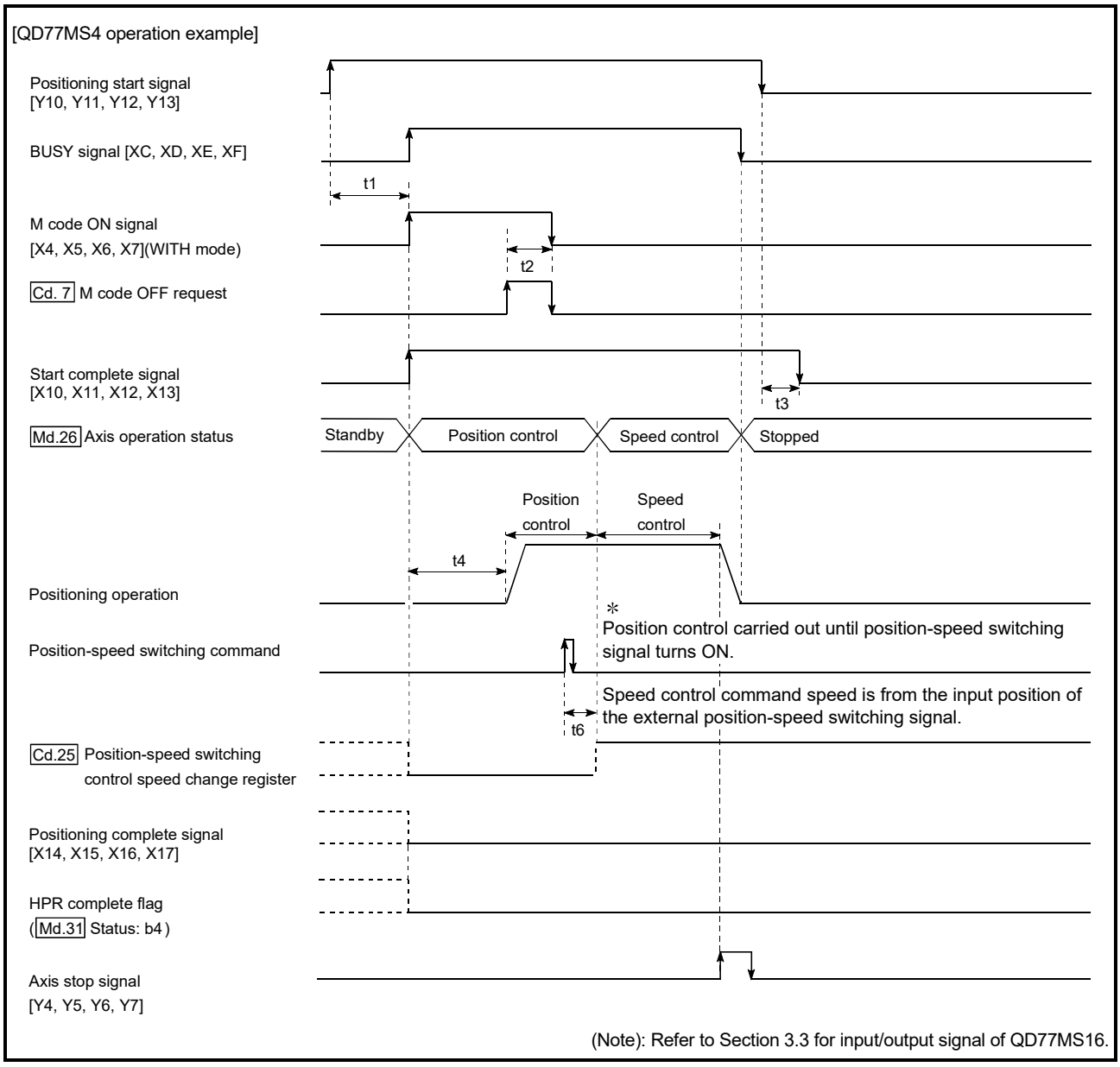

Fig. 9.19 Operation timing and processing time during position-speed switching control

Normal timing time Unit: [ms]

	Operation cycle	t1	t2	t3	t4	t5	t6
QD77MS2	0.88	0.2 to 0.3	0 to 0.9	0 to 0.9	1.8 to 2.7	–	0.2
	1.77	0.2 to 0.3	0 to 1.8	0 to 1.8	2.5 to 3.5	–	0.2
QD77MS4	0.88	0.2 to 0.3	0 to 0.9	0 to 0.9	1.8 to 2.7	–	0.2
	1.77	0.2 to 0.3	0 to 1.8	0 to 1.8	2.5 to 3.5	–	0.2
QD77MS16	0.88	0.3 to 1.4	0 to 0.9	0 to 0.9	1.8 to 2.7	–	0.2
	1.77	0.3 to 1.4	0 to 1.8	0 to 1.8	3.2 to 3.9	–	0.2

- The t1 timing time could be delayed by the operation state of other axes.
- When using the proximity dog signal and "[Cd.46] Speed-position switching command", the t6 timing time could be delayed or vary influenced by the PLC scan time or communication with servo amplifier.

■ Command position value during position-speed switching control

The following table shows the "[Md.20] Command position value" during position-speed switching control corresponding to the "[Pr.21] Command position value during speed control" settings.

"[Pr.21] Command position value during speed control" setting	[Md.20] Command position value
0: Do not update command position value	The command position value is updated during position control, and the command position value at the time of switching is maintained as soon as position control is switched to speed control.
1: Update command position value	The command position value is updated during position control and speed control.
2: Zero clear command position value	The command position value is updated during position control, and the command position value is cleared (to "0") as soon as position control is switched to speed control.

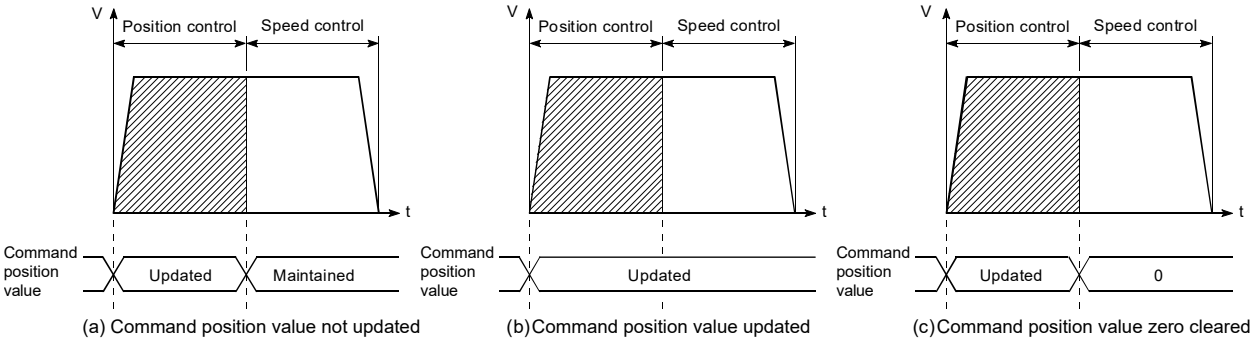

(a) Command position value not updated (b) Command position value updated (c) Command position value zero cleared

■ Switching time from position control to speed control

There is 1ms from the time the position-speed switching signal is turned ON to the time the position-speed switching latch flag ([Md.31] Status: b5) turns ON.

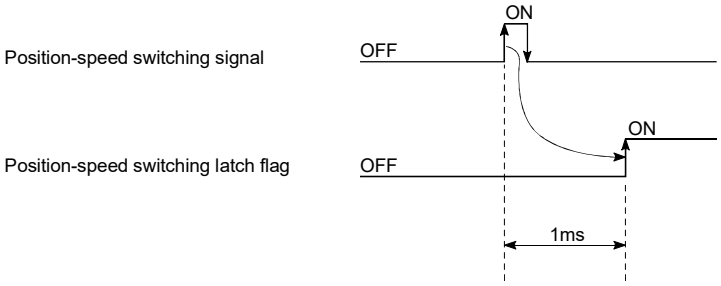

■ Position-speed switching signal setting

(1) The following table shows the items that must be set to use the external command signals [DI] as position-speed switching signals.

Setting item		Setting value	Setting details	Buffer memory address	
				QD77MS2 QD77MS4	QD77MS16
[Pr.42]	External command function selection	2	Speed-position, position-speed switching request.	62+150n	
[Cd.8]	External command valid	1	Validates an external command.	1505+100n	4305+100n
[Cd.45]	Speed-position switching device selection	0	Use the external command signal for switching from position control to speed control.	1566+100n	4366+100n

(Note): Set the external command signal [DI] in "[Pr.95] External command signal selection" at QD77MS16 use.
Refer to Section 5.2 "List of parameters" and Section 5.7 "List of control data" for information on the setting details.

(2) The following table shows the items that must be set to use the proximity dog signal (DOG) as position-speed switching signals.

Setting item		Setting value	Setting details	Buffer memory address	
				QD77MS2 QD77MS4	QD77MS16
[Cd.45]	Speed-position switching device selection	1	Use the proximity dog signal for switching from position control to speed control.	1566+100n	4366+100n

(Note): The setting is not required for "[Pr.42] External command function selection" and "[Cd.8] External command valid".
Refer to Section 5.7 "List of control data" for information on the setting details.

(3) The following table shows the items that must be set to use "[Cd.46] Speed-position switching command" as position-speed switching signals.

Setting item		Setting value	Setting details	Buffer memory address	
				QD77MS2 QD77MS4	QD77MS16
[Cd.45]	Speed-position switching device selection	2	Use the "[Cd.46] Speed-position switching command" for switching from position control to speed control.	1566+100n	4366+100n

(Note): The setting is not required for "[Pr.42] External command function selection" and "[Cd.8] External command valid".
Refer to Section 5.7 "List of control data" for information on the setting details.

■ Changing the speed control command speed

In "position-speed switching control", the speed control command speed can be changed during the position control.

(1) The speed control command speed can be changed during the position control of position-speed switching control.
A command speed change request will be ignored unless issued during the position control of the position-speed switching control.

(2) The "new command speed" is stored in "[Cd.25] Position-speed switching control speed change register" by the sequence program during position control.
This value then becomes the speed control command speed when the position-speed switching signal turns ON.

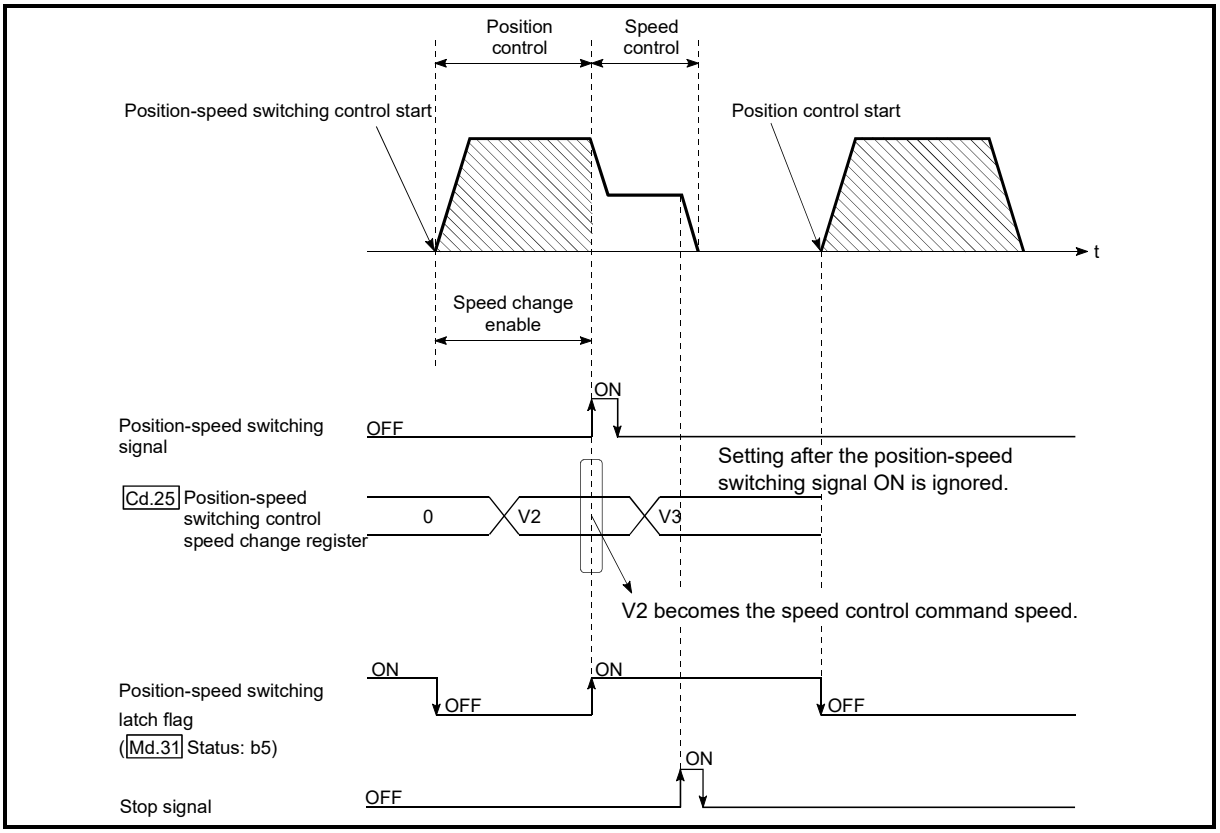

Fig. 9.20 Speed control speed change timing

POINTS

- The machine recognizes the presence of a command speed change request when the data is written to "[Cd.25] Position-speed switching control speed change register" with the sequence program.
- The new command speed is validated after execution of the position-speed switching control before the input of the position-speed switching signal.
- The command speed change can be enabled/disabled with the interlock function in speed control using the "position-speed switching latch flag" ([Md.31] Status: b5) of the axis monitor area.

Restrictions

(1) The error "Continuous path control not possible" (error code: 516) will occur and the operation cannot start if "continuous positioning control" or "continuous path control" is set in "[Da.1] Operation pattern".

(2) "Position-speed switching control" cannot be set in "[Da.2] Control method" of the positioning data when "continuous path control" has been set in "[Da.1] Operation pattern" of the immediately prior positioning data. (For example, if the operation pattern of positioning data No. 1 is "continuous path control", "position-speed switching control" cannot be set in positioning data No. 2.)
The error "Continuous path control not possible" (error code: 516) will occur and the machine will carry out a deceleration stop if this type of setting is carried out.

(3) The software stroke limit range is only checked during speed control if the "1: Update command position value" is set in "[Pr.21] Command position value during speed control".
The software stroke limit range is not checked when the control unit is set to "degree".

(4) The error "Software stroke limit +" (error code: 507) or "Software stroke limit -" (error code: 508) will occur and the operation cannot start if the start point address or end point address for position control exceeds the software stroke limit range.

(5) Deceleration stop will be carried out if the position-speed switching signal is not input before the machine is moved by a specified movement amount.
When the position-speed switching signal is input during automatic deceleration by positioning control, acceleration is carried out again to the command speed to continue speed control.
When the position-speed switching signal is input during deceleration to a stop with the stop signal, the control is switched to the speed control to stop the machine.
Restart is carried out by speed control using the restart command.

(6) The warning "Speed limit value over" (warning code: 501) will occur and control is continued by "[Pr.8] Speed limit value" if a new speed exceeds "[Pr.8] Speed limit value" at the time of change of the command speed.

(7) If the value set in "[Da.6] Positioning address/movement amount" is negative, the error "Outside address range" (error code: 530) will occur.

(8) Set WITH mode in "[Pr.18] M code ON signal output timing" at M code use. The M code will not be output, and the M code ON signal will not turn ON if the AFTER mode is set.

■ Positioning data setting examples

[When "position-speed switching control (forward run: position/speed)" is set in positioning data No. 1 of axis 1]

Setting item			Setting example		Setting details
			QD77MS2 QD77MS4	QD77MS16	
Axis 1 Positioning data No. 1	[Da.1]	Operation pattern	Positioning complete		Set "Positioning complete" assuming the next positioning data will not be executed. ("Continuous positioning control" and "Continuous path control" cannot be set in "position/speed changeover control".)
	[Da.2]	Control method	Forward run: position/speed		Set position-speed switching control.
	[Da.3]	Acceleration time No.	1		Designate the value set in "[Pr.25] Acceleration time 1" as the acceleration time at start.
	[Da.4]	Deceleration time No.	0		Designate the value set in "[Pr.10] Deceleration time 0" as the deceleration time at deceleration.
	[Da.5]	Axis to be interpolated QD77MS2 QD77MS4	–		Setting not required. (Setting value is ignored.)
	[Da.6]	Positioning address/ movement amount	10000.0μm		Set the movement amount at the time of position control before the switching to speed control. (Assuming that the "[Pr.1] Unit setting" is set to "mm".)
	[Da.7]	Arc address	–		Setting not required. (Setting value is ignored.)
	[Da.8]	Command speed	6000.00mm/min		Set the speed to be controlled.
	[Da.9]	Dwell time/JUMP destination positioning data No.	500ms		Set the time the machine dwells after the positioning stop (command stop) by position control to the output of the positioning complete signal. If the machine is stopped by speed control, the setting value is ignored.
	[Da.10]	M code/Condition data No./Number of LOOP to LEND repetitions	10		Set this when other sub operation commands are issued in combination with the No.1 positioning data.
	[Da.20]	Axis to be interpolated No.1 QD77MS16		–	Setting not required (setting value is ignored).
	[Da.21]	Axis to be interpolated No.2 QD77MS16		–	
	[Da.22]	Axis to be interpolated No.3 QD77MS16		–	

(Note): Refer to Section 5.3 "List of positioning data" for information on the setting details.

9.2.19 Current value changing

When the current value is changed to a new value, control is carried out in which the "[Md.20] Command position value" of the stopped axis is changed to a random address set by the user. (The "[Md.21] Feed machine value" is not changed when the current value is changed.)

The two methods for changing the current value are shown below.

[1] Changing to a new current value using the positioning data
[2] Changing to a new current value using the start No. (No. 9003) for a current value changing

The current value changing using method [1] is used during continuous positioning of multiple blocks, etc.

[1] Changing to a new current value using the positioning data

In "current value changing" ("[Da.2] Control method" = current value changing), "[Md.20] Command position value" is changed to the address set in "[Da.6] Positioning address/movement amount".

■ Operation chart

The following chart shows the operation timing for a current value changing. The "[Md.20] Command position value" is changed to the value set in "[Da.6] Positioning address/movement amount" when the positioning start signal turns ON.

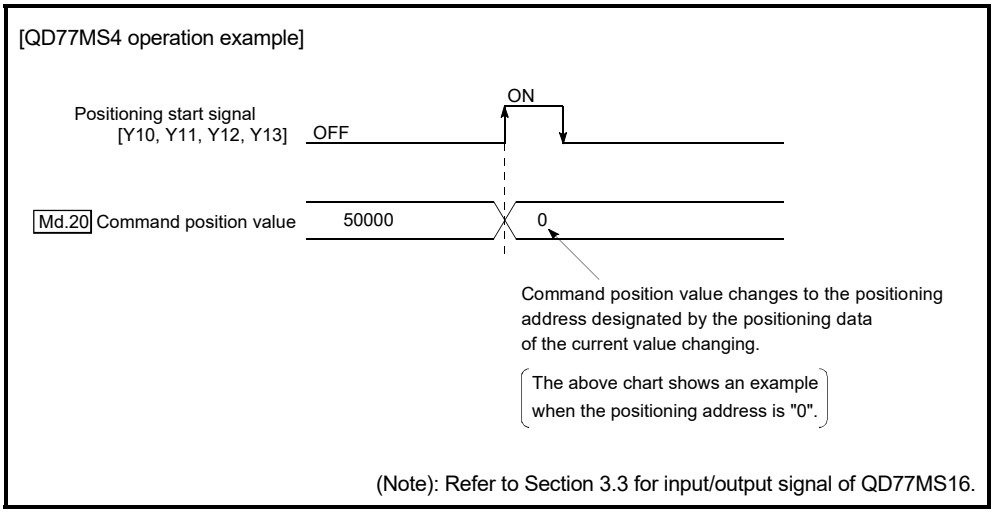

■ Restrictions

(1) The error "New current value not possible" (error code: 515) will occur and the operation cannot start if "continuous path control" is set in "[Da.1] Operation pattern". ("Continuous path control" cannot be set in current value changing.)

(2) "Current value changing" cannot be set in "[Da.2] Control method" of the positioning data when "continuous path control" has been set in "[Da.1] Operation pattern" of the immediately prior positioning data. (For example, if the operation pattern of positioning data No. 1 is "continuous path control", "current value changing" cannot be set in positioning data No. 2.) The error "New current value not possible" (error code: 515) will occur and the machine will carry out a deceleration stop if this type of setting is carried out.

(3) The error "Outside new current value range" (error code: 514) will occur and the operation cannot start if "degree" is set in "[Pr.1] Unit setting" and the value set in "[Da.6] Positioning address/movement amount (0 to 359.99999 [degree])" is outside the setting range.

(4) If the value set in "[Da.6] Positioning address/movement amount" is outside the software stroke limit ([Pr.12], [Pr.13]) setting range, the error "Software stroke limit +" (error code: 507) or "Software stroke limit -" (error code: 508) will occur at the positioning start, and the operation will not start.

(5) The error "Software stroke limit +" (error code: 507) or "Software stroke limit -" (error code: 508) will occur if the new position value is outside the software stroke limit range.

(6) The new current value using the positioning data (No.1 to 600) cannot be changed, if "0: Positioning control is not executed" is set in "[Pr.55] Operation setting for incompletion of HPR" and "HPR request flag" ON. The error "Start at HPR incomplete" (error code: 547) will occur.

(7) When an absolute position system is used, "[Md.20] Command position value" returns to the same value as "[Md.21] Machine feed value" at the start of communication with the servo amplifier after the power supply ON or PLC CPU reset.

■ Positioning data setting examples

[When "current value changing" is set in the positioning data No. 1 of axis 1]

Setting item			Setting example		Setting details
			QD77MS2 QD77MS4	QD77MS16	
Axis 1 Positioning data No. 1	[Da.1]	Operation pattern	Positioning complete		Set "Positioning complete" assuming that the next positioning data will be executed. ("Continuous path control" cannot be set by current value change.)
	[Da.2]	Control method	Current value changing		Set the current value changing.
	[Da.3]	Acceleration time No.	–		Setting not required (Setting value is ignored.)
	[Da.4]	Deceleration time No.	–		
	[Da.5]	Axis to be interpolated QD77MS2 QD77MS4	–		
	[Da.6]	Positioning address/ movement amount	10000.0μm		Set the address to which address change is desired. (Assuming that the "[Pr.1] Unit setting" is set to "mm".)
	[Da.7]	Arc address	–		Setting not required (Setting value is ignored.)
	[Da.8]	Command speed	–		
	[Da.9]	Dwell time/JUMP destination positioning data No.	–		
	[Da.10]	M code/Condition data No./Number of LOOP to LEND repetitions	10		Set this when other sub operation commands are issued in combination with the No.1 positioning data.
	[Da.20]	Axis to be interpolated No.1 QD77MS16		–	Setting not required (setting value is ignored).
	[Da.21]	Axis to be interpolated No.2 QD77MS16		–	
	[Da.22]	Axis to be interpolated No.3 QD77MS16		–	

(Note): Refer to Section 5.3 "List of positioning data" for information on the setting details.

[2] Changing to a new current value using the current value changing start No. (No. 9003)

In "current value changing" ("[Cd.3] Positioning start No." = 9003), "[Md.20] Command position value" is changed to the address set in "[Cd.9] New position value".

■ Operation chart

The current value is changed by setting the new current value in the current value changing buffer memory "[Cd.9] New position value", setting "9003" in the "[Cd.3] Positioning start No.", and turning ON the positioning start signal.

[QD77MS4 operation example]

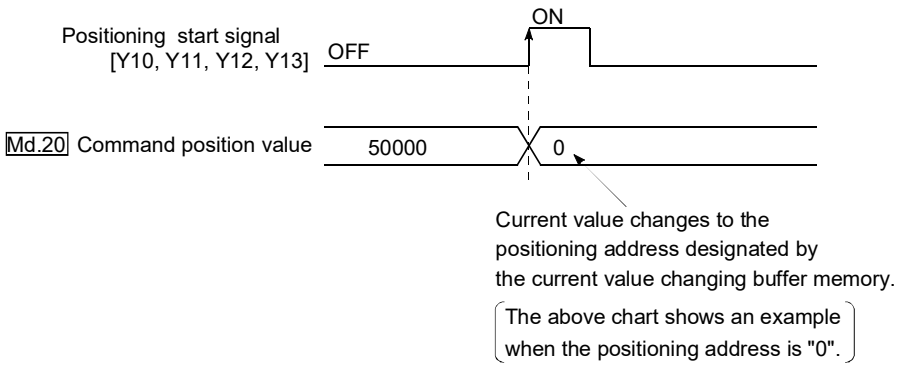

(Note): Refer to Section 3.3 for input/output signal of QD77MS16.

■ Restrictions

(1) The error "Outside new current value range" (error code: 514) will occur if the designated value is outside the setting range when "degree" is set in "Unit setting".

(2) The error "Software stroke limit +" (error code: 507) or "Software stroke limit -" (error code: 508) will occur if the designated value is outside the software stroke limit range.

(3) The current value cannot be changed during stop commands and while the M code ON signal is ON.

(4) The M code output function is made invalid.

(5) When an absolute position system is used, "[Md.20] Command position value" returns to the same value as "[Md.21] Machine feed value" at the start of communication with the servo amplifier after the power supply ON or PLC CPU reset.

POINTS

The current value can be changed using the current value changing start No. (No. 9003) if "0: Positioning control is not executed" is set in "[Pr.55] Operation setting for incompletion of HPR" and HPR request flag is ON.

■ Current value changing procedure

The following shows the procedure for changing the current value to a new value.

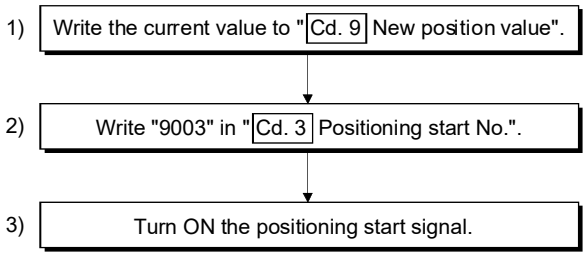

■ Setting method for the current value changing function

The following shows an example of a sequence program and data setting to change the current value to a new value with the positioning start signal. (The value "[Md.20] Command position value" is changed to "5000.0μm" in the example shown.)

(1) Set the following data.
(Set with the sequence program shown in (3), while referring to the start time chart shown in (2).)

Setting item		Setting value	Setting details	Buffer memory address	
				QD77MS2 QD77MS4	QD77MS16
[Cd.3]	Positioning start No.	9003	Set the start No. "9003" for the new current value.	1500+100n	4300+100n
[Cd.9]	New position value	50000	Set the new "[Md.20] Command position value".	1506+100n 1507+100n	4306+100n 4307+100n

(Note): Refer to Section 5.7 "List of control data" for details on the setting details.

(2) The following shows a start time chart.

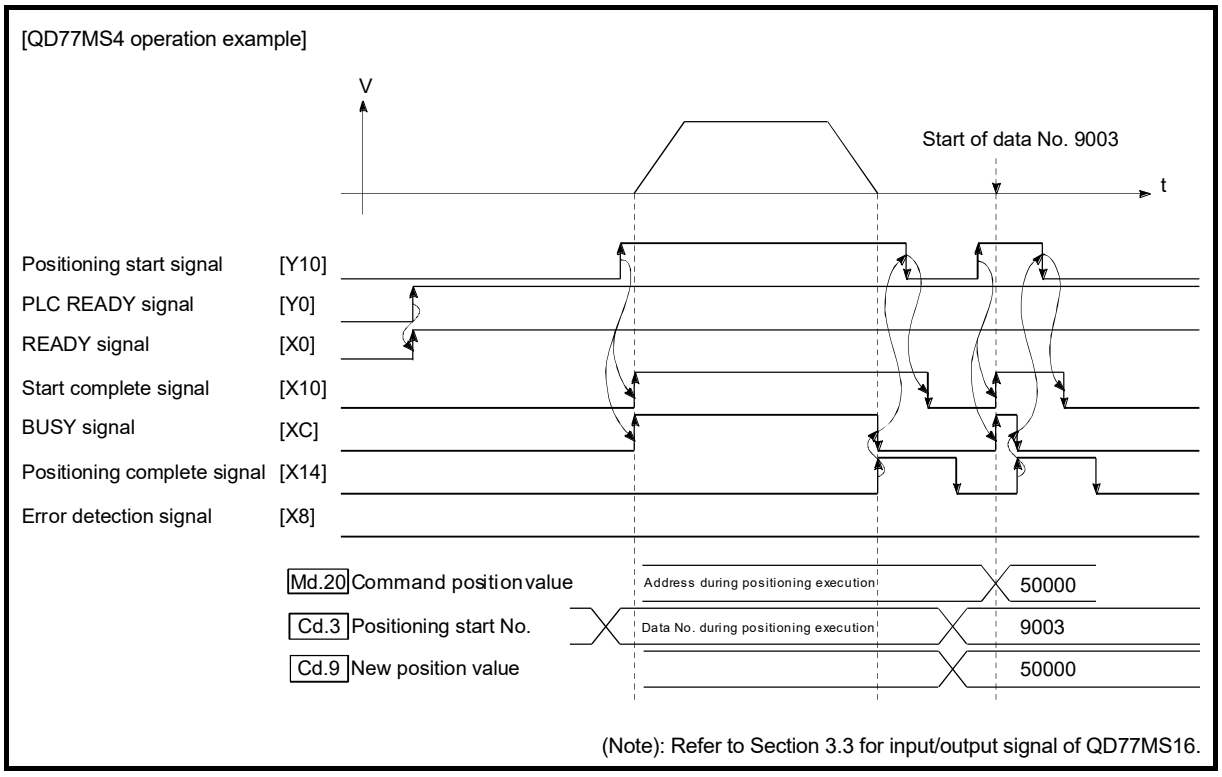

Fig. 9.21 Changing to a new current value using the current value changing start No. (No. 9003)

(3) Add the following sequence program to the control program, and write it to the PLC CPU.

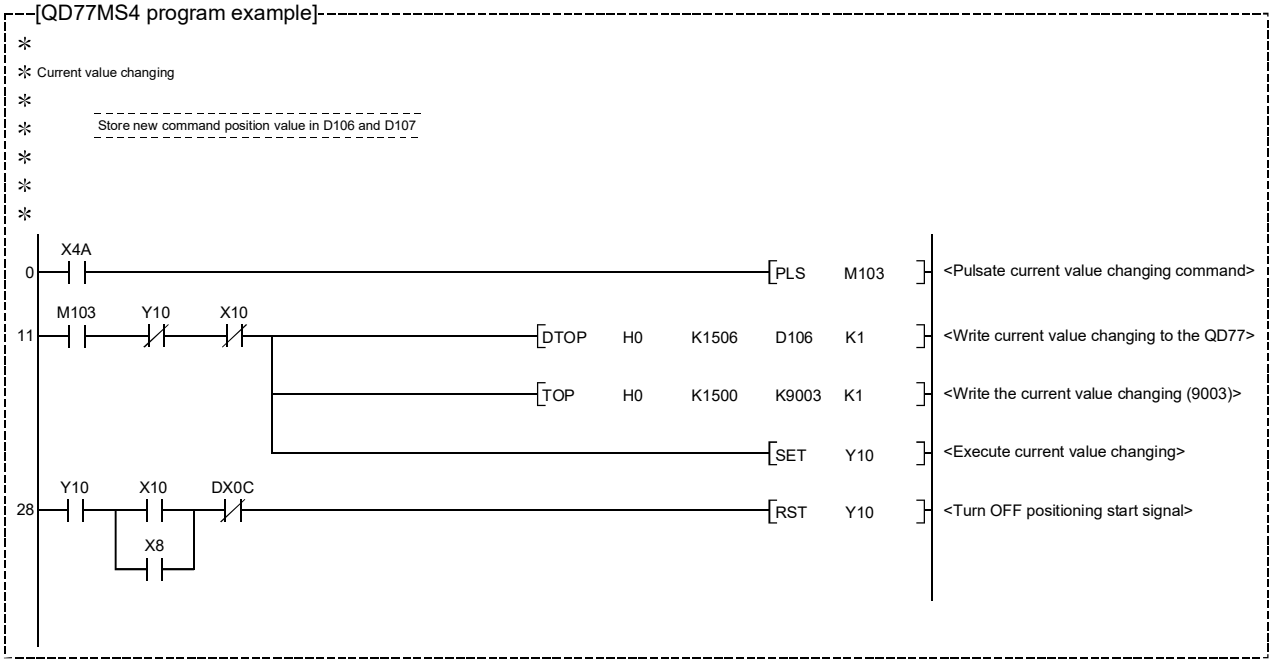

9.2.20 NOP instruction

The NOP instruction is used for the nonexecutable control method.

■ Operation

The positioning data No. to which the NOP instruction is set transfers, without any processing, to the operation for the next positioning data No.

■ Positioning data setting examples

[When "NOP instruction" is set in positioning data No.1 of axis 1]

Setting item			Setting example		Setting details
			QD77MS2 QD77MS4	QD77MS16	
Axis 1 Positioning data No. 1	[Da.1]	Operation pattern	–		Setting not required (Setting value is ignored.)
	[Da.2]	Control method	NOP		Set the NOP instruction
	[Da.3]	Acceleration time No.	–		Setting not required (Setting value is ignored.)
	[Da.4]	Deceleration time No.	–		
	[Da.5]	Axis to be interpolated QD77MS2 QD77MS4	–		
	[Da.6]	Positioning address/ movement amount	–		
	[Da.7]	Arc address	–		
	[Da.8]	Command speed	–		
	[Da.9]	Dwell time/JUMP destination positioning data No.	–		
	[Da.10]	M code/Condition data No./Number of LOOP to LEND repetitions	–		
	[Da.20]	Axis to be interpolated No.1 QD77MS16		–	
	[Da.21]	Axis to be interpolated No.2 QD77MS16		–	
	[Da.22]	Axis to be interpolated No.3 QD77MS16		–	

(Note): Refer to Section 5.3 "List of positioning data" for information on the setting details.

■ Restrictions

The error "Control method setting error" (error code: 524) will occur if the "NOP instruction" is set for the control method of the positioning data No. 600.

POINT

<Use example of NOP instruction>
If there is a possibility of speed switching or temporary stop (automatic deceleration) at a point between two points during positioning, that data can be reserved with the NOP instruction to change the data merely by the replacement of the identifier.

9.2.21 JUMP instruction

The JUMP instruction is used to control the operation so it jumps to a positioning data No. set in the positioning data during "continuous positioning control" or "continuous path control".

JUMP instruction includes the following two types of JUMP.

(1) Unconditional JUMP
When execution conditions are not set for the JUMP instruction
(When "0" is set to the condition data No.)

(2) Conditional JUMP
When execution conditions are set for the JUMP instruction
(The conditions are set to the "condition data" used with "high-level positioning control".)

Using the JUMP instruction enables repeating of the same positioning control, or selection of positioning data by the execution conditions during "continuous positioning control" or "continuous path control".

Operation

(1) Unconditional JUMP
The JUMP instruction is unconditionally executed. The operation jumps to the positioning data No. set in "[Da.9] Dwell time/JUMP destination positioning data No.".

(2) Conditional JUMP
The block start condition data is used as the JUMP instruction execution conditions.
- When block positioning data No. 7000 to 7004 is started:
  Each block condition data is used.
- When positioning data No. 1 to 600 is started:
  Start block 0 condition data is used.
- When the execution conditions set in "[Da.10] M code/Condition data No./Number of LOOP to LEND repetitions" of the JUMP instruction have been established:
  the JUMP instruction is executed to jump the operation to the positioning data No. set in "[Da.9] Dwell time/JUMP destination positioning data No.".
- When the execution conditions set in "[Da.10] M code/Condition data No./Number of LOOP to LEND repetitions" of the JUMP instruction have not been established:
  the JUMP instruction is ignored, and the next positioning data No. is executed.

Restrictions

(1) When using a conditional JUMP instruction, establish the JUMP instruction execution conditions by the 4th positioning data No. before the JUMP instruction positioning data No..
If the JUMP instruction execution conditions are not established by the time the 4th positioning control is carried out before the JUMP instruction positioning data No., the operation will be processed as an operation without established JUMP instruction execution conditions.
(During execution of continuous path control/continuous positioning control, the Simple Motion module calculates the positioning data of the positioning data No. four items ahead of the current positioning data.)

(2) Set JUMP instruction to positioning data No. that "continuous positioning control" or "continuous path control" is set in operation pattern.
It cannot set to positioning data No. that "positioning complete" is set in operation pattern.

(3) Positioning control such as loops cannot be executed by conditional JUMP instructions alone until the conditions have been established.
When loop control is executed using JUMP instruction, an axis operation status is "analyzing" during loop control, and the positioning data analysis (start) for other axes are not executed. As the target of the JUMP instruction, specify a positioning data that is controlled by other than JUMP and NOP instructions.

■ Positioning data setting example

[When "JUMP instruction" is set in positioning data No. 1 of axis 1]

Setting item			Setting example		Setting details
			QD77MS2 QD77MS4	QD77MS16	
Axis 1 Positioning data No. 1	[Da.1]	Operation pattern	–		Setting not required. (Setting value is ignored.)
	[Da.2]	Control method	JUMP instruction		Set the JUMP instruction.
	[Da.3]	Acceleration time No.	–		Setting not required. (Setting value is ignored.)
	[Da.4]	Deceleration time No.	–		
	[Da.5]	Axis to be interpolated QD77MS2 QD77MS4	–		
	[Da.6]	Positioning address/ movement amount	–		
	[Da.7]	Arc address	–		
	[Da.8]	Command speed	–		
	[Da.9]	Dwell time/JUMP destination positioning data No.	500		Set the positioning data No. 1 to 600 for the JUMP destination. (The positioning data No. of the JUMP instruction cannot be set. Setting its own positioning data No. will result in the error "Illegal data No." (error code: 502).)
	[Da.10]	M code/Condition data No./Number of LOOP to LEND repetitions	1		Set the JUMP instruction execution conditions with the condition data No. 0 : Unconditional JUMP 1 to 10 : Condition data No. ("Simultaneous start" condition data cannot be set.)
	[Da.20]	Axis to be interpolated No.1 QD77MS16		–	Setting not required (setting value is ignored).
	[Da.21]	Axis to be interpolated No.2 QD77MS16		–	
	[Da.22]	Axis to be interpolated No.3 QD77MS16		–	

(Note): Refer to Section 5.3 "List of positioning data" for information on the setting details.

9.2.22 LOOP

The LOOP is used for loop control by the repetition of LOOP to LEND.

■ Operation

The LOOP to LEND loop is repeated by set repeat cycles.

■ Positioning data setting examples

[When "LOOP" is set in positioning data No. 1 of axis 1]

Setting item			Setting example		Setting details
			QD77MS2 QD77MS4	QD77MS16	
Axis 1 Positioning data No. 1	[Da.1]	Operation pattern	–		Setting not required. (Setting value is ignored.)
	[Da.2]	Control method	LOOP		Set the LOOP.
	[Da.3]	Acceleration time No.	–		Setting not required. (Setting value is ignored.)
	[Da.4]	Deceleration time No.	–		
	[Da.5]	Axis to be interpolated QD77MS2 QD77MS4	–		
	[Da.6]	Positioning address/ movement amount	–		
	[Da.7]	Arc address	–		
	[Da.8]	Command speed	–		
	[Da.9]	Dwell time/JUMP destination positioning data No.	–		
	[Da.10]	M code/Condition data No./Number of LOOP to LEND repetitions	5		Set the LOOP to LEND repeat cycles.
	[Da.20]	Axis to be interpolated No.1 QD77MS16		–	Setting not required (setting value is ignored).
	[Da.21]	Axis to be interpolated No.2 QD77MS16		–	
	[Da.22]	Axis to be interpolated No.3 QD77MS16		–	

(Note): Refer to Section 5.3 "List of positioning data" for information on the setting details.

■ Restrictions

(1) The error "Control method LOOP setting error" (error code: 545) will occur if a "0" is set for the repeat cycles.

(2) Even if LEND is absent after LOOP, no error will occur, but repeat processing will not be carried out.

(3) Nesting is not allowed between LOOP-LEND's. If such setting is made, only the inner LOOP-LEND is processed repeatedly.

POINT

The setting by this control method is easier than that by the special start "FOR loop" of "High-level Positioning Control" (refer to Chapter 10).

- For special start: Positioning start data, special start data, condition data, and positioning data
- For control method: Positioning data

For the special start FOR to NEXT, the positioning data is required for each of FOR and NEXT points. For the control method, loop can be executed even only by one data.

Also, nesting is enabled by using the control method LOOP to LEND in combination with the special start FOR to NEXT.

However LOOP to LEND cannot be set across block. Always set LOOP to LEND so that the processing ends within one block.

(For details of the "block", refer to Section 10.1 "Outline of high-level positioning control".)

9.2.23 LEND

The LEND is used to return the operation to the top of the repeat (LOOP to LEND) loop.

■ Operation

When the repeat cycle designated by the LOOP becomes 0, the loop is terminated, and the next positioning data No. processing is started. (The operation pattern, if set to "Positioning complete", will be ignored.)
When the operation is stopped after the repeat operation is executed by designated cycles, the dummy positioning data (for example, incremental positioning without movement amount) is set next to LEND.

Positioning data No.	Operation pattern	Control method	Conditions	Operation
1	Continuous control	ABS2		Executed in the order of the positioning data No. 1 → 2 → 3 → 4 → 5 → 2 → 3 → 4 → 5 → 6. (The operation patterns of the positioning data Nos. 2 and 5 are ignored.)
2	Positioning complete	LOOP	Number of loop cycles: 2	
3	Continuous path control	ABS2		
4	Continuous control	ABS2		
5	Positioning complete	LEND		
6	Positioning complete	ABS2		

■ Positioning data setting examples

[When "LEND" is set in positioning data No. 8 of axis 1]

Setting item			Setting example		Setting details
			QD77MS2 QD77MS4	QD77MS16	
Axis 1 Positioning data No. 1	[Da.1]	Operation pattern	–		Setting not required. (Setting value is ignored.)
	[Da.2]	Control method	LEND		Set the LEND.
	[Da.3]	Acceleration time No.	–		Setting not required. (Setting value is ignored.)
	[Da.4]	Deceleration time No.	–		
	[Da.5]	Axis to be interpolated QD77MS2 QD77MS4	–		
	[Da.6]	Positioning address/ movement amount	–		
	[Da.7]	Arc address	–		
	[Da.8]	Command speed	–		
	[Da.9]	Dwell time/JUMP destination positioning data No.	–		
	[Da.10]	M code/Condition data No./Number of LOOP to LEND repetitions	–		
	[Da.20]	Axis to be interpolated No.1 QD77MS16		–	
	[Da.21]	Axis to be interpolated No.2 QD77MS16		–	
	[Da.22]	Axis to be interpolated No.3 QD77MS16		–	

(Note): Refer to Section 5.3 "List of positioning data" for information on the setting details.

Restrictions

(1) Ignore the "LEND" before the "LOOP" is executed.

(2) When the operation pattern "Positioning complete" has been set between LOOP and LEND, the positioning control is completed after the positioning data is executed, and the LOOP control is not executed.

MEMO

Chapter 10 High-Level Positioning Control

The details and usage of high-level positioning control (control functions using the "block start data") are explained in this chapter.

High-level positioning control is used to carry out applied control using the "positioning data". Examples of applied control are using conditional judgment to control "positioning data" set with the major positioning control, or simultaneously starting "positioning data" for several different axes.

Read the execution procedures and settings for each control, and set as required.

10.1 Outline of high-level positioning control 10- 2
10.1.1 Data required for high-level positioning control 10- 3
10.1.2 "Block start data" and "condition data" configuration 10- 4
10.2 High-level positioning control execution procedure 10- 6
10.3 Setting the block start data 10- 7
10.3.1 Relation between various controls and block start data 10- 7
10.3.2 Block start (normal start) 10- 8
10.3.3 Condition start 10- 10
10.3.4 Wait start 10- 11
10.3.5 Simultaneous start 10- 12
10.3.6 Repeated start (FOR loop) 10- 13
10.3.7 Repeated start (FOR condition) 10- 14
10.3.8 Restrictions when using the NEXT start 10- 15
10.4 Setting the condition data 10- 16
10.4.1 Relation between various controls and the condition data 10- 16
10.4.2 Condition data setting examples 10- 19
10.5 Multiple axes simultaneous start control 10- 21
10.6 Start program for high-level positioning control 10- 26
10.6.1 Starting high-level positioning control 10- 26
10.6.2 Example of a start program for high-level positioning control 10- 27

10.1 Outline of high-level positioning control

In "high-level positioning control" the execution order and execution conditions of the "positioning data" are set to carry out more applied positioning. (The execution order and execution conditions are set in the "block start data" and "condition data".)
The following applied positioning controls can be carried out with "high-level positioning control".

High-level positioning control	Details
Block (Note-1) start (Normal start)	With one start, executes the positioning data in a random block with the set order.
Condition start	Carries out condition judgment set in the "condition data" for the designated positioning data, and then executes the "block start data". • When the condition is established, the "block start data" is executed. • When not established, that "block start data" is ignored, and the next point's "block start data" is executed.
Wait start	Carries out condition judgment set in the "condition data" for the designated positioning data, and then executes the "block start data". • When the condition is established, the "block start data" is executed. • When not established, stops the control until the condition is established. (Waits.)
Simultaneous start (Note-2)	Simultaneously executes the positioning data having the No. for the axis designated with the "condition data". (Outputs command at the same timing.)
Repeated start (FOR loop)	Repeats the program from the "block start data" set with the "FOR loop" to the "block start data" set in "NEXT" for the designated number of times.
Repeated start (FOR condition)	Repeats the program from the "block start data" set with the "FOR condition" to the "block start data" set in "NEXT" until the conditions set in the "condition data" are established.

■ High-level positioning control sub functions

"High-level positioning control" uses the "positioning data" set with the "major positioning control". Refer to Section 3.2.5 "Combination of QD77MS main functions and sub functions" for details on sub functions that can be combined with the major positioning control.
Note that the sub function Section 13.7.7 "Pre-reading start function" cannot be used together with "high-level positioning control".

■ High-level positioning control from GX Works2

"High-level positioning control" (start of the "block start data") can be executed using the test function of GX Works2.
Refer to the help in "Simple Motion Module Setting Tool" of GX Works2 for details on starting of the "block start data" using GX Works2.

REMARK

(Note-1): Block
"1 block" is defined as all the data continuing from the positioning data in which "continuous positioning control" or "continuous path control" is set in the "[Da.1] Operation pattern" to the positioning data in which "independent positioning control (Positioning complete)" is set.

(Note-2): Simultaneous start
Besides the simultaneous start of "block start data" system, the "simultaneous starts" include the "multiple axes simultaneous start control" of control method.
Refer to Section 10.5 "Multiple axes simultaneous start control" for details.

10.1.1 Data required for high-level positioning control

"High-level positioning control" is executed by setting the required items in the "block start data" and "condition data", then starting that "block start data". Judgment about whether execution is possible, etc., is carried out at execution using the "condition data" designated in the "block start data".

"Block start data" can be set for each No. from 7000 to 7004 (called "block Nos."), and up to 50 points can be set for each axis. (This data is controlled with Nos. called "points" to distinguish it from the positioning data. For example, the 1st block start data item is called the "1st point block start data" or "point No. 1 block start data".)
"Condition data" can be set for each No. from 7000 to 7004 (called "block Nos."), and up to 10 data items can be set for each axis.
The "block start data" and "condition data" are set as 1 set for each block No.

The following table shows an outline of the "block start data" and "condition data" stored in the Simple Motion module.

Setting item			Setting details
Block start data	[Da.11]	Shape	Set whether to end the control after executing only the "block start data" of the shape itself, or continue executing the "block start data" set in the next point.
	[Da.12]	Start data No.	Set the "positioning data No." to be executed.
	[Da.13]	Special start instruction	Set the method by which the positioning data set in [Da.12] will be started.
	[Da.14]	Parameter	Set the conditions by which the start will be executed according to the commands set in [Da.13]. (Designate the "condition data No." and "Number of repetitions".)

Setting item				Setting details
Condition data	[Da.15]	Condition target		Designate the "device", "buffer memory storage details", and "positioning data No." elements for which the conditions are set.
	[Da.16]	Condition operator		Set the judgment method carried out for the target set in [Da.15].
	[Da.17]	Address		Set the buffer memory address in which condition judgment is carried out (only when the details set in [Da.15] are "buffer memory storage details").
	[Da.18]	Parameter 1		Set the required conditions according to the details set in [Da.15], [Da.16] and [Da.23] QD77MS16.
	[Da.19]	Parameter 2		
	[Da.23]	Number of simultaneous starting axes		Set the number of axes to be started simultaneously in the simultaneously start.
	[Da.24]	Simultaneous starting axis No.1	QD77MS16	Set the simultaneous starting axis in the simultaneously start on 2 to 4 axes.
	[Da.25]	Simultaneous starting axis No.2		
	[Da.26]	Simultaneous starting axis No.3		

10.1.2 "Block start data" and "condition data" configuration

The "block start data" and "condition data" corresponding to "block No. 7000" can be stored in the buffer memory.

• QD77MS2/QD77MS4

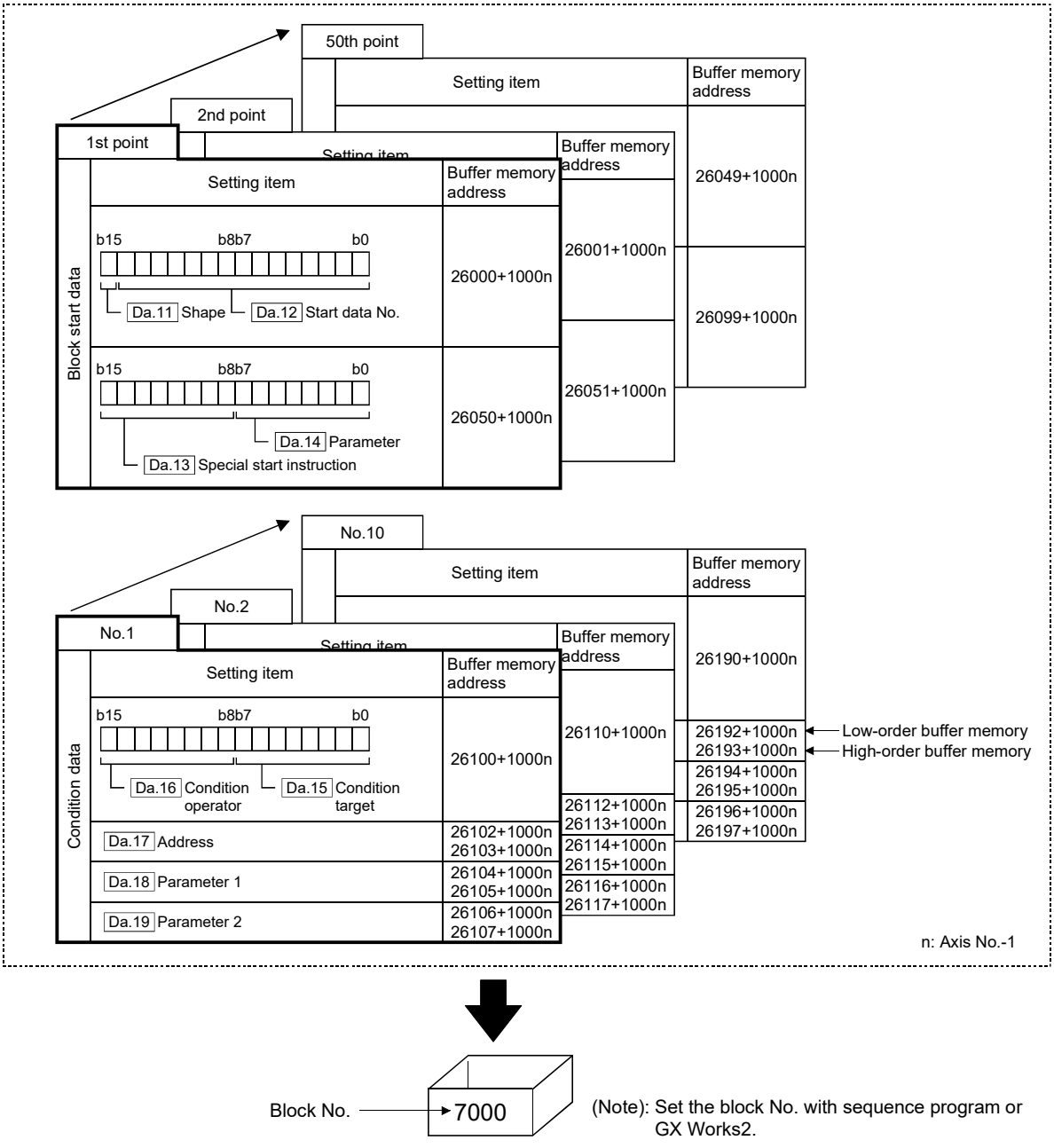

(Note): Set the block No. with sequence program or GX Works2.

• QD77MS16

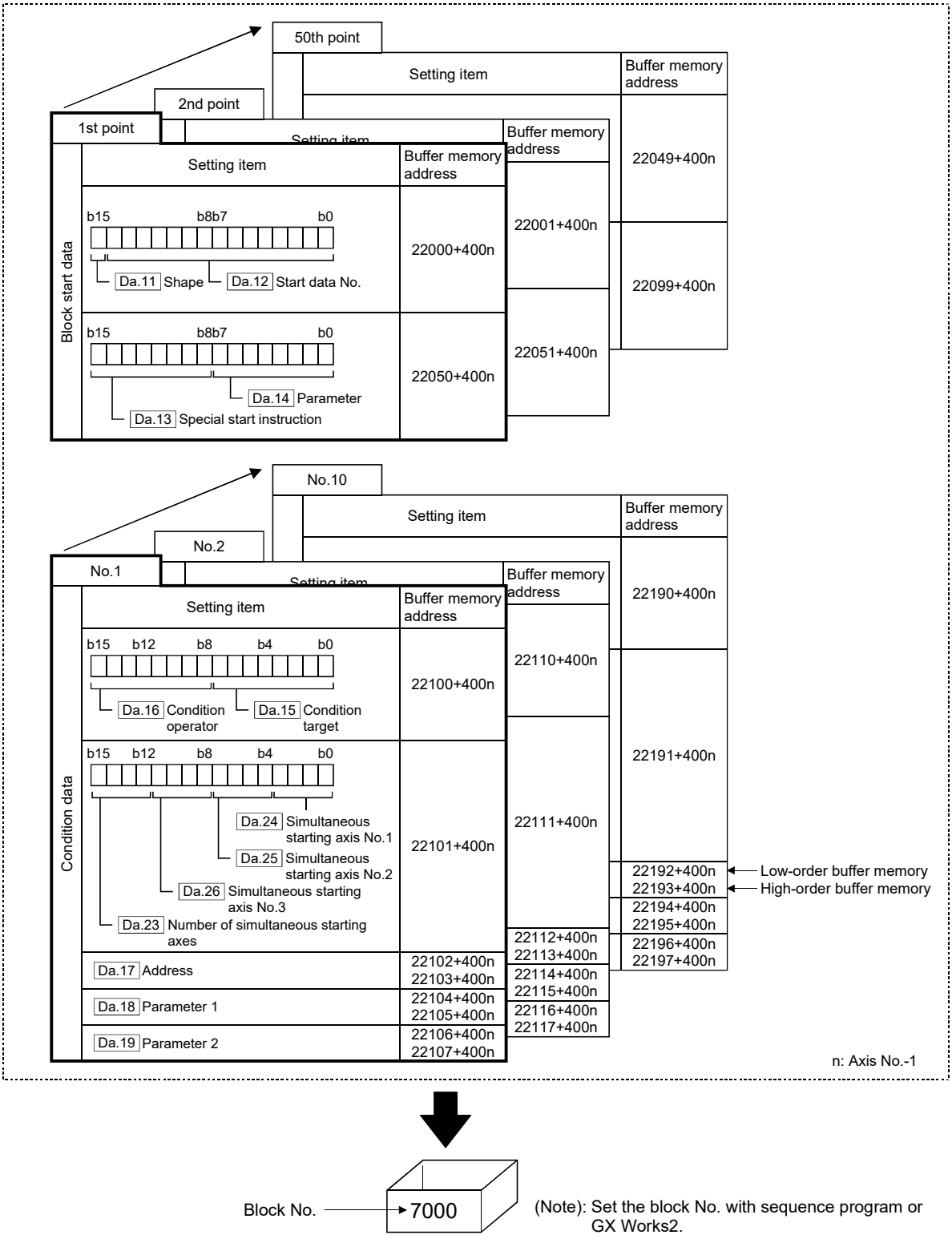

Set the "block start data" and "condition data" corresponding to the following "block Nos. 7001 to 7004" using sequence program or GX Works2 to Simple Motion module. For QD77MS16, the "block start data" and "condition data" corresponding to "block No. 7002 to 7004" are not allocated. Set the data with GX Works2.

10.2 High-level positioning control execution procedure

High-level positioning control is carried out using the following procedure.

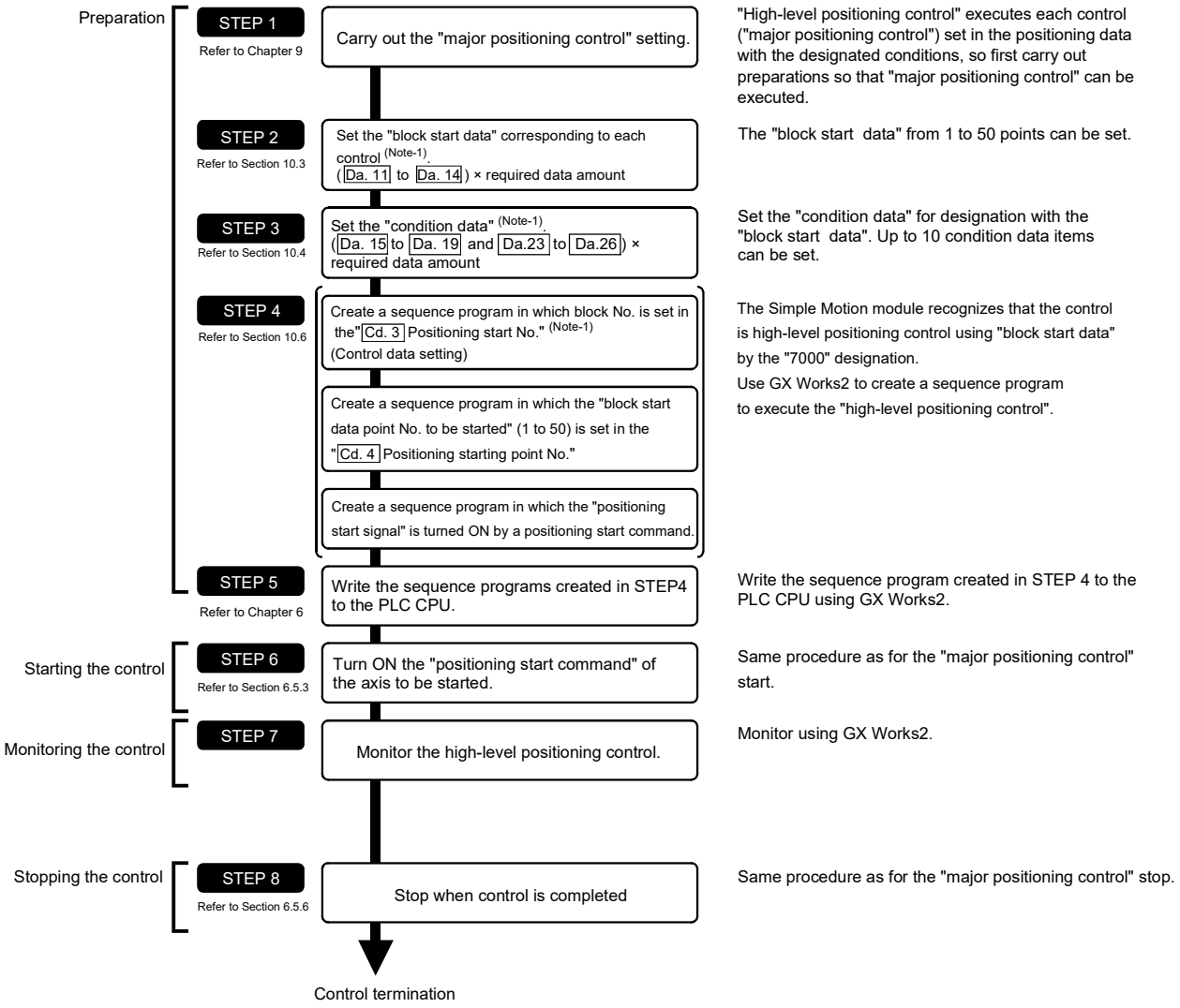

REMARK

(Note-1): Five sets of "block start data (50 points)" and "condition data (10 items)" corresponding to "block No. 7000 to 7004" are set with GX Works2 or sequence program.
When those are set with GX Works2 and written to the Simple Motion module, "7000 to 7004" can be set in "[Cd.3] Positioning start No." on STEP4 when the above is set.

10.3 Setting the block start data

10.3.1 Relation between various controls and block start data

The "block start data" must be set to carry out "high-level positioning control". The setting requirements and details of each "block start data" item to be set differ according to the "[Da.13] Special start instruction" setting.

The following shows the "block start data" setting items corresponding to various control methods. The operation details of each control type are explained starting in Section 10.3.2. Also refer to Section 10.4 "Setting the condition data" for details on "condition data" with which control execution is judged.
(The "block start data" settings in this chapter are assumed to be carried out using GX Works2.)

Block start data setting items \ High-level positioning control			Block start (Normal start)	Condition start	Wait start	Simulta-neous start	Repeated start (FOR loop)	Repeated start (FOR condition)	NEXT start ✻
[Da.11]	Shape	0 : End	◎	◎	◎	◎	×	×	◎
		1 : Continue	◎	◎	◎	◎	◎	◎	◎
[Da.12]	Start data No.		1 to 600						
[Da.13]	Special start instruction		0	1	2	3	4	5	6
[Da.14]	Parameter		–	Condition data No.			Number of repetitions	Condition data No.	–

◎ : One of the two setting items must be set.
○ : Set as required (Set to "–" when not used.)
× : Setting not possible
– : Setting not required (Set the initial value or a value within the setting range.)

✻ The "NEXT start" instruction is used in combination with "repeated start (FOR loop)" and "repeated start (FOR condition)". Control using only the "NEXT start" will not be carried out.

REMARK

It is recommended that the "block start data" be set whenever possible with GX Works2. Execution by sequence program uses many sequence programs and devices. The execution becomes complicated, and the scan times will increase.

10.3.2 Block start (normal start)

In a "block start (normal start)", the positioning data groups of a block starting from the positioning data set in "[Da.12]Start data No." are continuously executed with the set order by starting once..

Section [2] shows a control example where the "block start data" and "positioning data" are set as shown in section [1].

[1] Setting examples

(1) Block start data setting example

Axis 1 block start data	[Da.11] Shape	[Da.12] Start data No.	[Da.13] Special start instruction	[Da.14] Parameter
1st point	1: Continue	1	0: Block start	–
2nd point	1: Continue	2	0: Block start	–
3rd point	1: Continue	5	0: Block start	–
4th point	1: Continue	10	0: Block start	–
5th point	0: End	15	0: Block start	–
•				
•				

(2) Positioning data setting example

Axis 1 positioning data No.	[Da.1] Operation pattern	
1	00: Positioning complete	
2	11: Continuous path control	1 block (Note-1)
3	01: Continuous positioning control	
4	00: Positioning complete	
5	11: Continuous path control	1 block
6	00: Positioning complete	
•		
10	00: Positioning complete	
•		
15	00: Positioning complete	
•		

REMARK

(Note-1): Block

"1 block" is defined as all the data continuing from the positioning data in which "continuous positioning control" or "continuous path control" is set in the "[Da.1] Operation pattern" to the positioning data in which "independent positioning control (Positioning complete)" is set.

[2] Control examples

The following shows the control executed when the "block start data" of the 1st point of axis 1 is set as shown in section [1] and started.

<1> The positioning data is executed in the following order before stopping.
Axis 1 positioning data No. 1 → 2 → 3 → 4 → 5 → 6 → 10 → 15.

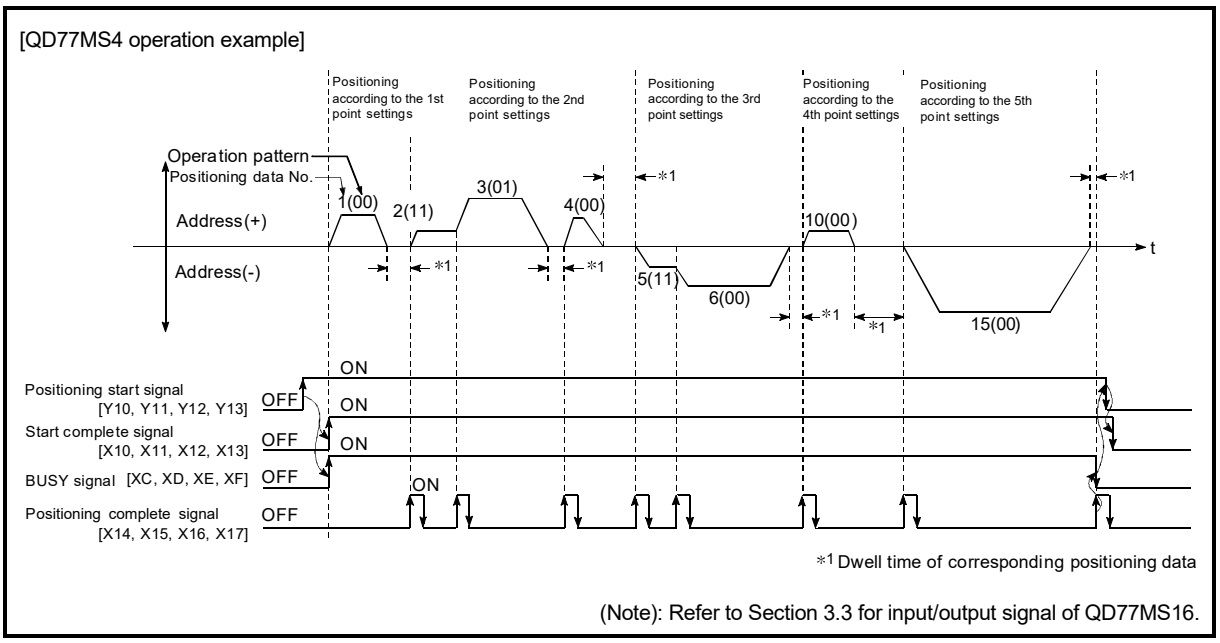

Fig. 10.1 Block start control example

10.3.3 Condition start

In a "condition start", the "condition data" conditional judgment designated in "[Da.14] Parameter" is carried out for the positioning data set in "[Da.12] Start data No.". If the conditions have been established, the "block start data" set in "1: condition start" is executed. If the conditions have not been established, that "block start data" will be ignored, and the "block start data" of the next point will be executed.

Section [2] shows a control example where the "block start data" and "positioning data" are set as shown in section [1].

[1] Setting examples

(1) Block start data setting example

Axis 1 block start data	[Da.11] Shape	[Da.12] Start data No.	[Da.13] Special start instruction	[Da.14] Parameter
1st point	1: Continue	1	1: Condition start	1
2nd point	1: Continue	10	1: Condition start	2
3rd point	0: End	50	0: Block start	–
•				
•				

(Note): The "condition data Nos." have been set in "[Da.14] Parameter".

(2) Positioning data setting example

Axis 1 positioning data No.	[Da.1] Operation pattern
1	01: Continuous positioning control
2	01: Continuous positioning control
3	00: Positioning complete
•	
10	11: Continuous path control
11	11: Continuous path control
12	00: Positioning complete
•	
50	00: Positioning complete
•	

[2] Control examples

The following shows the control executed when the "block start data" of the 1st point of axis 1 is set as shown in section [1] and started.

<1> The conditional judgment set in "condition data No. 1" is carried out before execution of the axis 1 "positioning data No.1".
→ Conditions established → Execute positioning data No. 1, 2, and 3 → Go to <2>.
→ Conditions not established → Go to <2>.

<2> The conditional judgment set in "condition data No.2" is carried out before execution of the axis 1 "positioning data No. 10".
→ Conditions established → Execute positioning data No.10, 11, and 12 → Go to <3>.
→ Conditions not established → Go to <3>.

<3> Execute axis 1 "positioning data No.50" and stop the control.

10.3.4 Wait start

In a "wait start", the "condition data" conditional judgment designated in "[Da.14] Parameter" is carried out for the positioning data set in "[Da.12] Start data No.". If the conditions have been established, the "block start data" is executed. If the conditions have not been established, the control stops (waits) until the conditions are established.

Section [2] shows a control example where the "block start data" and "positioning data" are set as shown in section [1].

[1] Setting examples

(1) Block start data setting example

Axis 1 block start data	[Da.11] Shape	[Da.12] Start data No.	[Da.13] Special start instruction	[Da.14] Parameter
1st point	1: Continue	1	2: Wait start	3
2nd point	1: Continue	10	0: Block start	–
3rd point	0: End	50	0: Block start	–
•				
•				

(Note): The "condition data Nos." have been set in "[Da.14] Parameter".

(2) Positioning data setting example

Axis 1 positioning data No.	[Da.1] Operation pattern
1	01: Continuous positioning control
2	01: Continuous positioning control
3	00: Positioning complete
•	
10	11: Continuous path control
11	11: Continuous path control
12	00: Positioning complete
•	
50	00: Positioning complete
•	

[2] Control examples

The following shows the control executed when the "block start data" of the 1st point of axis 1 is set as shown in section [1] and started.

<1> The conditional judgment set in "condition data No. 3" is carried out before execution of the axis 1 "positioning data No. 1".
→ Conditions established → Execute positioning data No. 1, 2, and 3 → Go to <2>.
→ Conditions not established → Control stops (waits) until conditions are established → Go to <1>.

<2> Execute the axis 1 "positioning data No. 10, 11, 12, and 50" and stop the control.

10.3.5 Simultaneous start

In a "simultaneous start", the positioning data set in the "[Da.12] Start data No." and positioning data of other axes set in the "condition data" are simultaneously executed (commands are output with the same timing).
(The "condition data" is designated with "[Da.14] Parameter".)
Section [2] shows a control example where the "block start data" and "positioning data" are set as shown in section [1].

[1] Setting examples

(1) Block start data setting example

Axis 1 block start data	[Da.11] Shape	[Da.12] Start data No.	[Da.13] Special start instruction	[Da.14] Parameter
1st point	0: End	1	3: Simultaneous start	4
•				
•				
•				
•				

(Note): It is assumed that the "axis 2 positioning data" for simultaneous starting is set in the "condition data" designated with "[Da.14] Parameter".

(2) Positioning data setting example

Axis 1 positioning data No.	[Da.1] Operation pattern
1	01: Continuous positioning control
2	01: Continuous positioning control
3	00: Positioning complete
•	
•	
•	
•	
•	

[2] Control examples

The following shows the control executed when the "block start data" of the 1st point of axis 1 is set as shown in section [1] and started.

<1> Check the axis operation status of axis 2 which is regarded as the simultaneous starting axis.
→ Axis 2 is standing by → Go to <2>.
→ Axis 2 is carrying out positioning. → An error occurs and simultaneous start will not be carried out.

<2> Simultaneously start the axis 1 "positioning data No. 1" and axis 2 positioning data set in "condition data No. 4.

[3] Precautions

Positioning data No. executed by simultaneously started axes is set to condition data ("[Da.18] Parameter 1", "[Da.19] Parameter 2"), but the setting value of start axis (the axis which carries out positioning start) should be "0". If the setting value is set to other than "0", the positioning data set in "[Da.18] Parameter 1", "[Da.19] Parameter 2" is given priority to be executed rather than "[Da.12] Start data No.".
(For details, refer to Section 5.5 "List of condition data".)

10.3.6 Repeated start (FOR loop)

In a "repeated start (FOR loop)", the data between the "block start data" in which "4: FOR loop" is set in "[Da.13] Special start instruction" and the "block start data" in which "6: NEXT start" is set in "[Da.13] Special start instruction " is repeatedly executed for the number of times set in "[Da.14] Parameter". An endless loop will result if the number of repetitions is set to "0".
(The number of repetitions is set in "[Da.14] Parameter" of the "block start data" in which "4: FOR loop" is set in "[Da.13] Special start instruction".)

Section [2] shows a control example where the "block start data" and "positioning data" are set as shown in section [1].

[1] Setting examples

(1) Block start data setting example

Axis 1 block start data	[Da.11] Shape	[Da.12] Start data No.	[Da.13] Special start instruction	[Da.14] Parameter
1st point	1: Continue	1	4: FOR loop	2
2nd point	1: Continue	10	0: Block start	–
3rd point	0: End	50	6: NEXT start	–
•				
•				

(Note): The "condition data Nos." have been set in "[Da.14] Parameter".

(2) Positioning data setting example

Axis 1 positioning data No.	[Da.1] Operation pattern
1	01: Continuous positioning control
2	01: Continuous positioning control
3	00: Positioning complete
•	
10	11: Continuous path control
11	00: Positioning complete
•	
50	01: Continuous positioning control
51	00: Positioning complete
•	

[2] Control examples

The following shows the control executed when the "block start data" of the 1st point of axis 1 is set as shown in section [1] and started.

<1> Execute the axis 1 "positioning data No.1, 2, 3, 10, 11, 50, and 51".

<2> Return to the axis 1 "1st point block start data". Again execute the axis 1 "positioning data No.1, 2, 3, 10, 11, 50 and 51", and then stop the control. (Repeat for the number of times (2 times) set in [Da.14].)

10.3.7 Repeated start (FOR condition)

In a "repeated start (FOR condition)", the data between the "block start data" in which "5: FOR condition" is set in "[Da.13] Special start instruction" and the "block start data" in which "6: NEXT start" is set in "[Da.13] Special start instruction" is repeatedly executed until the establishment of the conditions set in the "condition data". Conditional judgment is carried out as soon as switching to the point of "6: NEXT start" (before positioning of NEXT start point).
(The "condition data" designation is set in "[Da.14] Parameter" of the "block start data" in which "5: FOR condition" is set in "[Da.13] Special start instruction".)

Section [2] shows a control example where the "block start data" and "positioning data" are set as shown in section [1].

[1] Setting examples

(1) Block start data setting example

Axis 1 block start data	[Da.11] Shape	[Da.12] Start data No.	[Da.13] Special start instruction	[Da.14] Parameter
1st point	1: Continue	1	5: FOR condition	5
2nd point	1: Continue	10	0: Block start	–
3rd point	0: End	50	6: NEXT start	–
•				
•				

(Note): The "condition data Nos." have been set in "[Da.14] Parameter".

(2) Positioning data setting example

Axis 1 positioning data No.	[Da.1] Operation pattern
1	01: Continuous positioning control
2	01: Continuous positioning control
3	00: Positioning complete
•	
10	11: Continuous path control
11	00: Positioning complete
•	
50	01: Continuous positioning control
51	00: Positioning complete
•	

[2] Control examples

The following shows the control executed when the "block start data" of the 1st point of axis 1 is set as shown in section [1] and started.

<1> Execute the axis 1 "positioning data No.1, 2, 3, 10, and 11".

<2> Carry out the conditional judgment set in axis 1 "condition data No.5" (Note-1).
→ Conditions not established → Execute "Positioning data No.50, 51". Go to <1>.
→ Conditions established → Execute "Positioning data No.50, 51" and complete the positioning.

(Note-1): Conditional judgment is carried out as soon as switching to NEXT start point (before positioning of NEXT start point).

10.3.8 Restrictions when using the NEXT start

The "NEXT start" is an instruction indicating the end of the repetitions when executing Section 10.3.6 "Repeated start (FOR loop)" and Section 10.3.7 "Repeated start (FOR condition)".

The following shows the restrictions when setting "6: NEXT start" in the "block start data".

(1) The processing when "6: NEXT start" is set before execution of "4: FOR loop" or "5: FOR condition" is the same as that for a "0: block start".

(2) Repeated processing will not be carried out if there is no "6: NEXT start" instruction after the "4: FOR loop" or "5: FOR condition" instruction. (Note that an "error" will not occur.)

(3) Nesting is not possible between "4: FOR loop" and "6: NEXT start", or between "5: FOR condition" and "6: NEXT start". The warning "FOR to NEXT nest construction" (warning code: 506) will occur if nesting is attempted.

[Operating examples without nesting structure]

Start block data	[Da.13] Special start instruction
1st point	Normal start
2nd point	FOR
3rd point	Normal start
4th point	NEXT
5th point	Normal start
6th point	Normal start
7th point	FOR
8th point	Normal start
9th point	NEXT
•	
•	

[Operating examples with nesting structure]

Start block data	[Da.13] Special start instruction
1st point	Normal start
2nd point	FOR
3rd point	Normal start
4th point	FOR
5th point	Normal start
6th point	Normal start
7th point	NEXT
8th point	Normal start
9th point	NEXT
•	
•	

A warning will occur when starting the 4th point "FOR". The JUMP destination of the 7th point "NEXT" is the 4th point. The 9th point "NEXT" is processed as normal start.

10.4 Setting the condition data

10.4.1 Relation between various controls and the condition data

"Condition data" is set in the following cases.

(1) When setting conditions during execution of Section 9.2.21 "JUMP instruction" (major positioning control)
(2) WHEN SETTING conditions during execution of "high-level positioning control"

The "condition data" to be set includes the setting items from [Da.15] to [Da.19] and [Da.23] to [Da.26], but the setting requirements and details differ according to the control method and setting conditions.

The following shows the "condition data" "[Da.15] Condition target" corresponding to the different types of control.
(The "condition data" settings in this chapter are assumed to be carried out using GX Works2.)

Control type / [Da.15] Setting item	High-level positioning control				Major positioning control
	Block start	Wait start	Simultaneous start	Repeated start (For condition)	JUMP instruction
01H: Device X (Note-1)	◎	◎	×	◎	◎
02H: Device Y (Note-1)	◎	◎	×	◎	◎
03H: Buffer memory (1 word)	◎	◎	×	◎	◎
04H: Buffer memory (2 words)	◎	◎	×	◎	◎
05H: Positioning data No.	×	×	◎	×	×

◎ : One of the setting items must be set.
× : Setting not possible
(Note-1): Refer to devices X/Y which belongs to Simple Motion module.

REMARK

It is recommended that the "condition data" be set whenever possible with GX Works2. Execution by sequence program uses many sequence programs and devices. The execution becomes complicated, and the scan times will increase.

The setting requirements and details of the following "condition data" [Da.16] to [Da.19] and [Da.23] setting items differ according to the "[Da.15] Condition target" setting.
The following shows the [Da.16] to [Da.19] and [Da.23] setting items corresponding to the "[Da.15] Condition target".

• QD77MS2/QD77MS4

Other setting item / [Da.15] Condition target	[Da.16] Condition operator	[Da.17] Address	[Da.18] Parameter 1	[Da.19] Parameter 2
01H: Device X 02H: Device Y	07H: DEV=ON 08H: DEV=OFF	–	X: 0H, 1H, 4H to 17H Y: 0H, 1H, 4H to 17H	–
03H: Buffer memory (1 word) (Note-1) 04H: Buffer memory (2 words) (Note-1)	01H: ＊＊=P1 02H: ＊＊≠P1 03H: ＊＊≤P1 04H: ＊＊≥P1 05H: P1≤＊＊≤P2 06H: ＊＊≤P1, P2≤＊＊	Buffer memory address	P1 (numeric value)	P2 (numeric value) (Set only when "[Da.16]" is [05H] or [06H].)
05H: Positioning data No.	10H: Axis 1 selected 20H: Axis 2 selected 30H: Axis 1 and 2 selected 40H: Axis 3 selected 50H: Axis 1 and 3 selected 60H: Axis 2 and 3 selected 70H: Axis 1, 2, and 3 selected 80H: Axis 4 selected 90H: Axis 1 and 4 selected A0H: Axis 2 and 4 selected B0H: Axis 1, 2, and 4 selected C0H: Axis 3 and 4 selected D0H: Axis 1, 3, and 4 selected E0H: Axis 2, 3, and 4 selected	—	Low-order 16 bits: Axis 1 positioning data No. (Note-2) High-order 16 bits: Axis 2 positioning data No. (Note-2)	Low-order 16 bits: Axis 3 positioning data No. (Note-2) High-order 16 bits: Axis 4 positioning data No. (Note-2)

– : Setting not required (Set the initial value or a value within the setting range.)

＊＊ : Value stored in buffer memory designated in [Da.17]

(Note-1): Comparison of ≤ and ≥ is judged as signed values.
Refer to Section 5.5 "List of condition data" for the setting contents.

(Note-2): The setting value of start axis (the axis which executes positioning start) should be "0". If the setting value is set to other than "0", the positioning data set in "[Da.18] Parameter 1", "[Da.19] Parameter 2" is given priority to be executed rather than "[Da.12] Start data No.".

• QD77MS16

Other setting item / [Da.15] Condition target	[Da.16] Condition operator	[Da.23] Number of simultaneous starting axes	[Da.17] Address	[Da.18] Parameter 1	[Da.19] Parameter 2
01H: Device X 02H: Device Y	07H: DEV=ON 08H: DEV=OFF	—	—	X: 0H, 1H, 10H to 1FH Y: 0H, 1H, 10H to 1FH	—
03H: Buffer memory (1 word) (Note-1) 04H: Buffer memory (2 words) (Note-1)	01H: ＊＊=P1 02H: ＊＊≠P1 03H: ＊＊≤P1 04H: ＊＊≥P1 05H: P1≤＊＊≤P2 06H: ＊＊≤P1, P2≤＊＊	—	Buffer memory address	P1 (numeric value)	P2 (numeric value) (Set only when "[Da.16]" is [05H] or [06H].)
05H: Positioning data No.		2 3 4	—	Low-order 16 bits: "[Da.24] Simultaneous starting axis No.1" positioning data No. High-order 16 bits: "[Da.25] Simultaneous starting axis No.2" positioning data No.	— Low-order 16 bits: "[Da.26] Simultaneous starting axis No.3" positioning data No. High-order 16 bits: Unusable (Set "0".)

– : Setting not required (Set the initial value or a value within the setting range.)

＊＊ : Value stored in buffer memory designated in [Da.17]

(Note-1): Comparison of ≤ and ≥ is judged as signed values.
Refer to Section 5.5 "List of condition data" for the setting contents.

Judgment whether the condition operator is "=" or "≠" at the start of wait.
Judgment on data is carried out for each operation cycle of the Simple Motion module. Thus, in the judgment on the data such as command position value which varies continuously, the operator "=" may not be detected. If this occurs, use a range operator.

10.4.2 Condition data setting examples

The following shows the setting examples for "condition data".

(1) QD77MS2/QD77MS4

(a) Setting the device ON/OFF as a condition

[Condition]
Device "XC" (Axis 1 BUSY signal) is OFF.

[Da.15] Condition target	[Da.16] Condition operator	[Da.17] Address	[Da.18] Parameter 1	[Da.19] Parameter 2
01H: Device X	08H: DEV=OFF	—	0CH	—

(b) Setting the numeric value stored in the "buffer memory" as a condition

[Condition]
The value stored in buffer memory addresses "800, 801" ([Md.20] Command position value) is "1000" or larger.

[Da.15] Condition target	[Da.16] Condition operator	[Da.17] Address	[Da.18] Parameter 1	[Da.19] Parameter 2
04H: Buffer memory (2 words)	04H: ＊＊ ≥ P1	800	1000	—

(c) Designating the axis and positioning data No. to be simultaneously started in "simultaneous start"

[Condition]
Simultaneously starting "axis 2 positioning data No.3"

[Da.15] Condition target	[Da.16] Condition operator	[Da.17] Address	[Da.18] Parameter 1	[Da.19] Parameter 2
05H: Positioning data No.	20H: Axis 2 selected	—	High-order 16 bits "0003H" (Note-1)	— (Note-1)

(Note-1): The setting value of start axis (the axis which executes positioning start) should be "0000H".

(2) QD77MS16

(a) Setting the device ON/OFF as a condition

[Condition]
Device "X10" (Axis 1 BUSY signal) is OFF.

[Da.15] Condition target	[Da.16] Condition operator	[Da.17] Address	[Da.18] Parameter 1	[Da.19] Parameter 2	[Da.23] Number of simultaneous starting axes	[Da.24] Simultaneous starting axis No.1	[Da.25] Simultaneous starting axis No.2	[Da.26] Simultaneous starting axis No.3
01H: Device X	08H: DEV=OFF	—	10H	—	—	—	—	—

(b) Setting the numeric value stored in the "buffer memory" as a condition

[Condition]
The value stored in buffer memory addresses "2400, 2401" ([Md.20] Command position value) is "1000" or larger.

[Da.15] Condition target	[Da.16] Condition operator	[Da.17] Address	[Da.18] Parameter 1	[Da.19] Parameter 2	[Da.23] Number of simultaneous starting axes	[Da.24] Simultaneous starting axis No.1	[Da.25] Simultaneous starting axis No.2	[Da.26] Simultaneous starting axis No.3
04H: Buffer memory (2 words)	04H: ＊＊ ≥P1	2400	1000	—	—	—	—	—

(c) Designating the axis and positioning data No. to be simultaneously started in "simultaneous start"

[Condition]
Simultaneously starting "axis 2 positioning data No.3"

[Da.15] Condition target	[Da.16] Condition operator	[Da.17] Address	[Da.18] Parameter 1	[Da.19] Parameter 2	[Da.23] Number of simultaneous starting axes	[Da.24] Simultaneous starting axis No.1	[Da.25] Simultaneous starting axis No.2	[Da.26] Simultaneous starting axis No.3
05H: Positioning data No.	—	—	Low-order 16 bits "0003H"	—	2H: 2 axes	1H: Axis 2	0H	0H

10.5 Multiple axes simultaneous start control

The "multiple axes simultaneous start" starts outputting the command to the specified simultaneous starting axis at the same timing as the started axis.
The maximum of four axes can be started simultaneously.

[1] Control details

The multiple axes simultaneous start control is carried out by setting the simultaneous start setting data to the multiple axes simultaneous start control buffer memory of the axis control data, "9004" to "[Cd.3] Positioning start No." of the start axis, and then turning ON the positioning start signal.

- QD77MS2 .....Set the start data No. of simultaneous starting axis (positioning data No. to be started simultaneously for each axis) in "[Cd.30] Simultaneous starting axis start data No. (axis 1 start data No.)" and "[Cd.31] Simultaneous starting axis start data No. (axis 2 start data No.)".
- QD77MS4 .....Set the start data No. of simultaneous starting axis (positioning data No. to be started simultaneously for each axis) in "[Cd.30] Simultaneous starting axis start data No. (axis 1 start data No.)" to "[Cd.33] Simultaneous starting axis start data No. (axis 4 start data No.)".
- QD77MS16 .....Set the number of axes to be started simultaneously and axis No. in "[Cd.43] Simultaneous starting axis", and the start data No. of simultaneous starting axis (positioning data No. to be started simultaneously for each axis) in "[Cd.30] Simultaneous starting own axis start data No." and "[Cd.31] Simultaneous starting axis start data No.1" to "[Cd.33] Simultaneous starting axis start data No.3".

[2] Restrictions

(1) The error "Error before simultaneous start" (error code: 501) will occur and all simultaneously started axes will not start if the simultaneously started axis start data No. is not set to the axis control data on the start axis or set outside the setting range.
(2) The error "Error before simultaneous start" (error code: 501) will occur and all simultaneously started axes will not start if either of the simultaneously started axes is BUSY.
(3) The error "Error before simultaneous start" (error code: 501) will occur and all simultaneously started axes will not start if an error occurs during the analysis of the positioning data on the simultaneously started axes.
(4) No error or warning will occur if only the start axis is the simultaneously started axis.
(5) This function cannot be used with the sub function Section 13.7.7 "Pre-reading start function".

[3] Multiple axes simultaneous start control procedure

The procedure for multiple axes simultaneous start control is as follows.

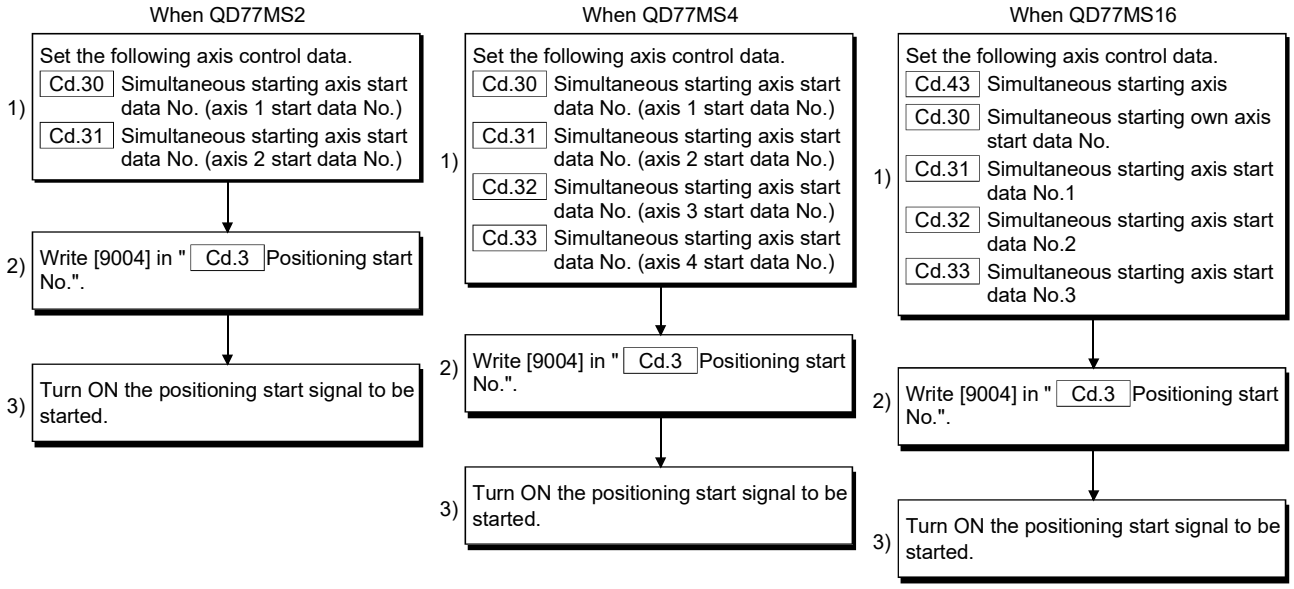

[4] Multiple axes simultaneous start control function setting method

The following shows the setting of the data used to execute the multiple axes simultaneous start control with positioning start signals (The axis control data on the start axis is set).

Setting item		Setting value	Setting details	Buffer memory address	
				QD77MS2 QD77MS4	QD77MS16
[Cd.3]	Positioning start No.	9004	Set the multiple axes simultaneous start control start No. "9004".	1500+100n	4300+100n
[Cd.43]	Simultaneous starting axis QD77MS16	Set the number of simultaneous starting axes and target axis.			4339+100n
[Cd.30]	Simultaneous starting axis start data No. (axis 1 start data No.) QD77MS2 QD77MS4	Set the simultaneously started axis start data No. Set a "0" for the axis other than the simultaneously started axes.		1540+100n	
	Simultaneous starting own axis start data No. QD77MS16				4340+100n
[Cd.31]	Simultaneous starting axis start data No. (axis 2 start data No.) QD77MS2 QD77MS4			1541+100n	
	Simultaneous starting axis start data No.1 QD77MS16				4341+100n
[Cd.32]	Simultaneous starting axis start data No. (axis 3 start data No.) QD77MS4			1542+100n	
	Simultaneous starting axis start data No.2 QD77MS16				4342+100n
[Cd.33]	Simultaneous starting axis start data No. (axis 4 start data No.) QD77MS4			1543+100n	
	Simultaneous starting axis start data No.3 QD77MS16				4343+100n

n: Axis No.-1

(Note-1): Refer to Section 5.7 "List of control data" for information on setting details.
(Note-2): The signal of axis 3 and 4 cannot be used in the QD77MS2.

[5] Setting examples

(1) The following shows the setting examples in which the QD77MS4 [axis 1] is used as the start axis and the simultaneously started axes are used as the axes 2 and 4.

Setting item		Setting value	Setting details	Buffer memory address (Axis 1)
[Cd.3]	Positioning start No.	9004	Set the multiple axes simultaneous start control start No. "9004".	1500
[Cd.30]	Simultaneous starting axis start data No. (axis 1 start data No.)	100	The axis 1 starts the positioning data No. 100.	1540
[Cd.31]	Simultaneous starting axis start data No. (axis 2 start data No.)	200	Immediately after the start of the axis 1, the axis 2 starts the axis 2 positioning data No. 200.	1541
[Cd.32]	Simultaneous starting axis start data No. (axis 3 start data No.)	0	Will not start simultaneously.	1542
[Cd.33]	Simultaneous starting axis start data No. (axis 4 start data No.)	300	Immediately after the start of the axis 1, the axis 4 starts the axis 4 positioning data No. 300.	1543

(2) The following shows the setting examples in which the QD77MS16 [axis 10] is used as the start axis and the simultaneously started axes are used as the axes 12 and 14.

Setting item		Setting value	Setting details	Buffer memory address (Axis 10)
[Cd.3]	Positioning start No.	9004	Set the multiple axes simultaneous start control start No. "9004".	5200
[Cd.43]	Simultaneous starting axis	30DBH	Set the axis 12 (0BH) to the simultaneous starting axis No.1, and the axis 14 (0DH) to the simultaneous starting axis No.2.	5239
[Cd.30]	Simultaneous starting own axis start data No.	100	The axis 10 starts the positioning data No. 100.	5240
[Cd.31]	Simultaneous starting axis start data No.1	200	Immediately after the start of the axis 10, the axis 12 starts the axis 12 positioning data No. 200.	5241
[Cd.32]	Simultaneous starting axis start data No.2	300	Immediately after the start of the axis 10, the axis 14 starts the axis 14 positioning data No. 300.	5242
[Cd.33]	Simultaneous starting axis start data No.3	0	Will not start simultaneously.	5243

POINTS

(1) The "multiple axes simultaneous start control" carries out an operation equivalent to the "simultaneous start" using the "block start data".

(2) The setting of the "multiple axes simultaneous start control" is easier than that of the "simultaneous start" using the "block start data".

- Setting items for "simultaneous start" using "block start data"
  Positioning start data, block start data, condition data, and positioning data
- Setting items for "multiple axes simultaneous start control"
  Positioning data and axis control data

10.6 Start program for high-level positioning control

10.6.1 Starting high-level positioning control

To execute high-level positioning control, a sequence program must be created to start the control in the same method as for major positioning control.

The following shows the procedure for starting the "1st point block start data" (regarded as block No. 7000) set in axis 1.

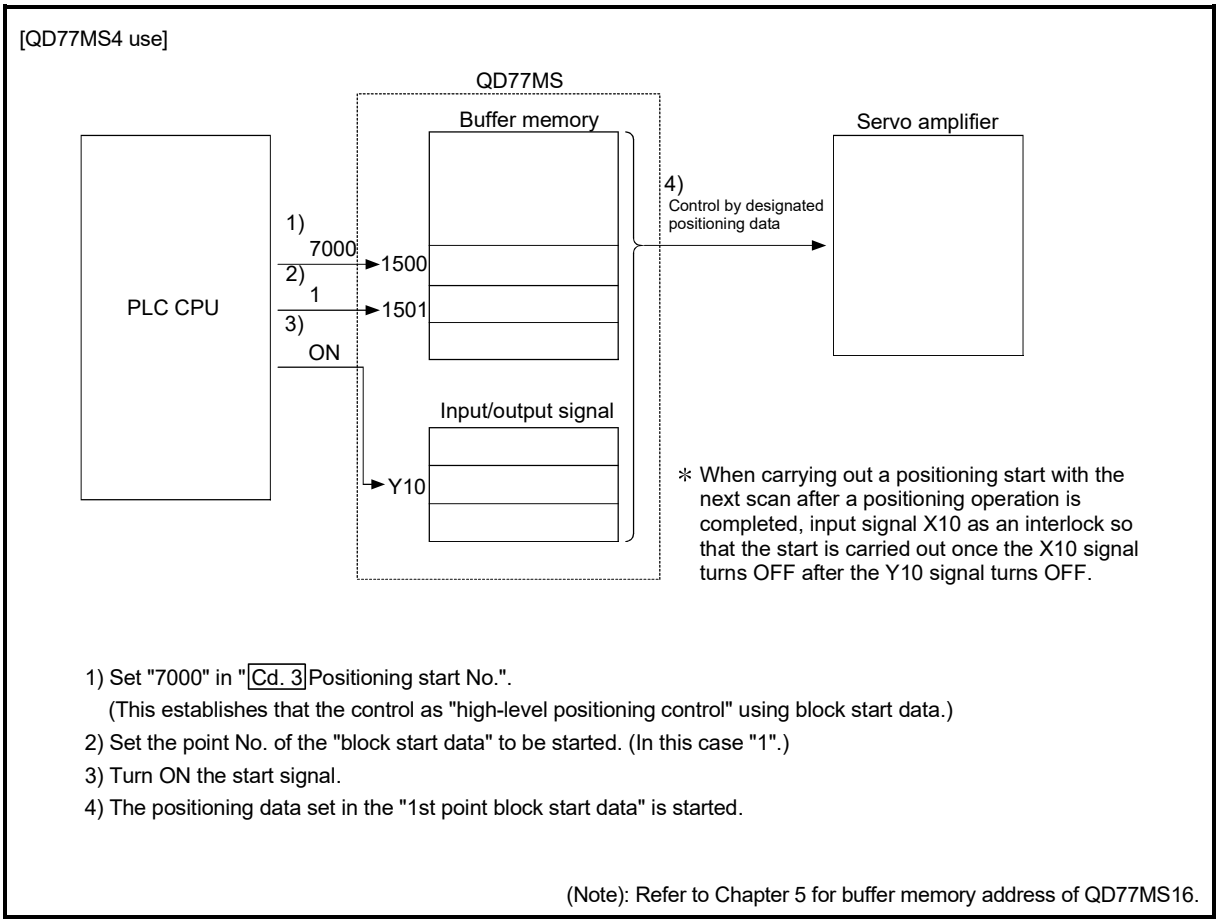

Fig. 10.2 High-level positioning control start procedure

10.6.2 Example of a start program for high-level positioning control

The following shows an example of a start program for high-level positioning control in which the 1st point "block start data" of axis 1 is started. (The block No. is regarded as "7000".)

■ Control data that require setting

The following control data must be set to execute high-level positioning control. The setting is carried out using a sequence program.

Setting item		Setting value	Setting details	Buffer memory address	
				QD77MS2 QD77MS4	QD77MS16
[Cd.3]	Positioning start No.	7000	Set "7000" to indicate control using "block start data".	1500+100n	4300+100n
[Cd.4]	Positioning starting point No.	1	Set the point No. of the "block start data" to be started.	1501+100n	4301+100n

n: Axis No.-1

(Note): Refer to Section 5.7 "List of control data" for details on the setting details.

■ Start conditions

The following conditions must be fulfilled when starting the control. The required conditions must also be integrated into the sequence program, and configured so the control does not start unless the conditions are fulfilled.

Signal name		Signal state		Device	
				QD77MS2 QD77MS4	QD77MS16
Interface signal	PLC READY signal	ON	PLC CPU preparation completed	Y0	
	READY signal	ON	QD77MS preparation completed	X0	
	All axis servo ON	ON	All axis servo ON	Y1	
	Synchronization flag	ON	QD77MS buffer memory The access is possible.	X1	
	Axis stop signal	OFF	Axis stop signal is OFF	Y4 to Y7	[Cd.180] Axis stop
	Start complete signal	OFF	Start complete signal is OFF	X10 to X13	[Md.31] Status: b14
	BUSY signal	OFF	BUSY signal is OFF	XC to XF	X10 to X1F
	Error detection signal	OFF	There is no error	X8 to XB	[Md.31] Status: b13
	M code ON signal	OFF	M code ON signal is OFF	X4 to X7	[Md.31] Status: b12
External signal	Forced stop input signal	ON	There is no forced stop input	–	
	Stop signal	OFF	Stop signal is OFF	–	
	Upper limit (FLS)	ON	Within limit range	–	
	Lower limit (RLS)	ON	Within limit range	–	

■ Start time chart

The following chart shows a time chart in which the positioning data No. 1, 2, 10, 11, and 12 of QD77MS4 [axis 1] are continuously executed as an example.

(1) Block start data setting example

Axis 1 block start data	[Da.11] Shape	[Da.12] Start data No.	[Da.13] Special start instruction	[Da.14] Parameter
1st point	1: Continue	1	0: Block start	–
2nd point	0: End	10	0: Block start	–
•				
•				

(2) Positioning data setting example

Axis 1 positioning data No.	[Da.1] Operation pattern
1	11: Continuous path control
2	00: Positioning complete
•	
10	11: Continuous path control
11	11: Continuous path control
12	00: Positioning complete
•	

(3) Start time chart

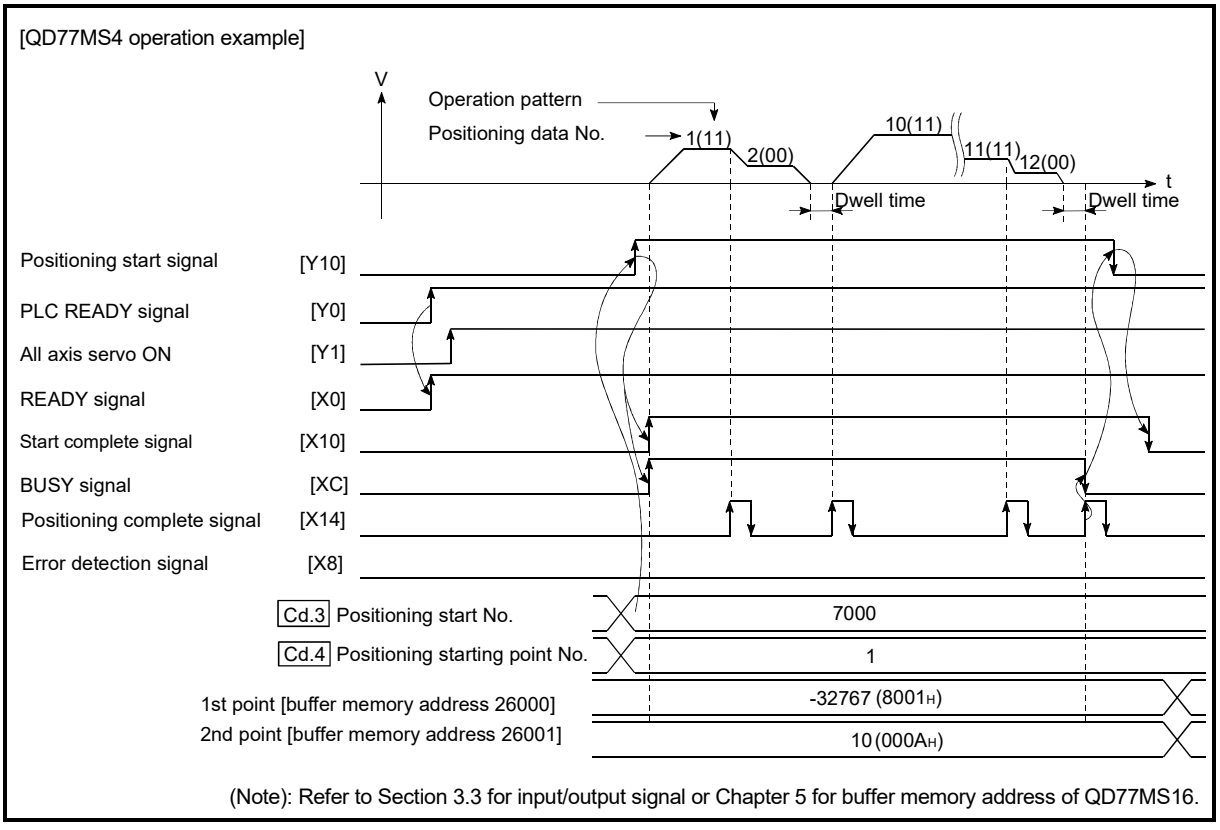

Fig. 10.3 Start time chart for high-level positioning control (block start)

■ Creating the program

[QD77MS4 program example]

Set the block start data beforehand.

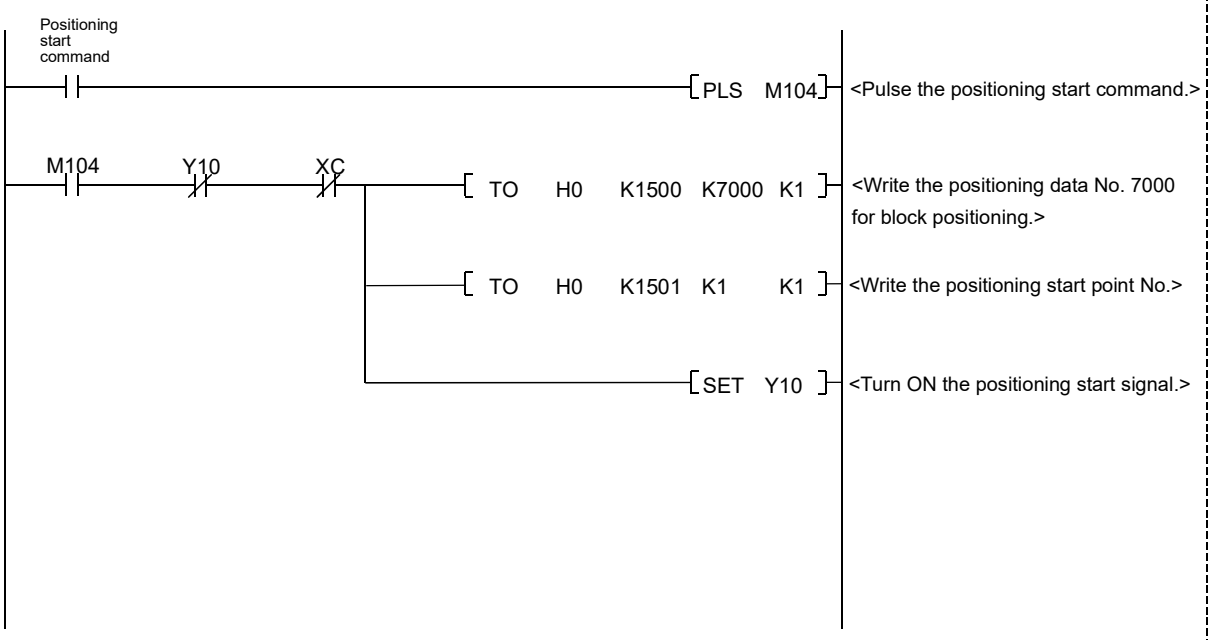

Y10: Positioning start signal
XC: BUSY signal
M104: Positioning start command pulse

MEMO

Chapter 11 Manual Control

The details and usage of manual control are explained in this chapter.
In manual control, commands are issued during a JOG operation and an inching operation executed by the turning ON of the JOG START signal, or from a manual pulse generator connected to the Simple Motion module.
Manual control using a sequence program from the PLC CPU is explained in this chapter.
Refer to the help in "Simple Motion Module Setting Tool" of GX Works2 for an explanation of manual control (JOG operation, inching operation and manual pulse generator operation) using the GX Works2.

11.1 Outline of manual control 11- 2
11.1.1 Three manual control methods 11- 2
11.2 JOG operation 11- 4
11.2.1 Outline of JOG operation 11- 4
11.2.2 JOG operation execution procedure 11- 7
11.2.3 Setting the required parameters for JOG operation 11- 8
11.2.4 Creating start programs for JOG operation 11- 10
11.2.5 JOG operation example 11- 12
11.3 Inching operation 11- 15
11.3.1 Outline of inching operation 11- 15
11.3.2 Inching operation execution procedure 11- 18
11.3.3 Setting the required parameters for inching operation 11- 19
11.3.4 Creating a program to start the inching operation 11- 20
11.3.5 Inching operation example 11- 22
11.4 Manual pulse generator operation 11- 24
11.4.1 Outline of manual pulse generator operation 11- 24
11.4.2 Manual pulse generator operation execution procedure 11- 28
11.4.3 Setting the required parameters for manual pulse generator operation 11- 29
11.4.4 Creating a program to enable/disable the manual pulse generator operation 11- 30

11.1 Outline of manual control

11.1.1 Three manual control methods

"Manual control" refers to control in which positioning data is not used, and a positioning operation is carried out in response to signal input from an external device. The three types of this "manual control" are explained below.

[1] JOG operation

"JOG operation" is a control method in which the machine is moved by only a movement amount (commands are continuously output while the JOG START signal is ON). This operation is used to move the workpiece in the direction in which the limit signal is ON, when the operation is stopped by turning the limit signal OFF to confirm the positioning system connection and obtain the positioning data address (refer to Section 13.7.4 "Teaching function").

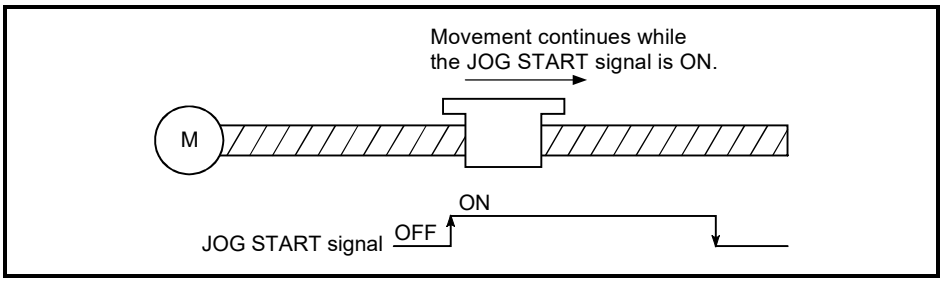

Fig. 11.1 JOG operation

[2] Inching operation

"Inching operation" is a control method in which a minute movement amount of command is output manually in operation cycle.
When the "inching movement amount" of the axis control data is set by JOG operation, the workpiece is moved by a set movement amount. (When the "inching movement amount" is set to "0", the machine operates as JOG operation.)

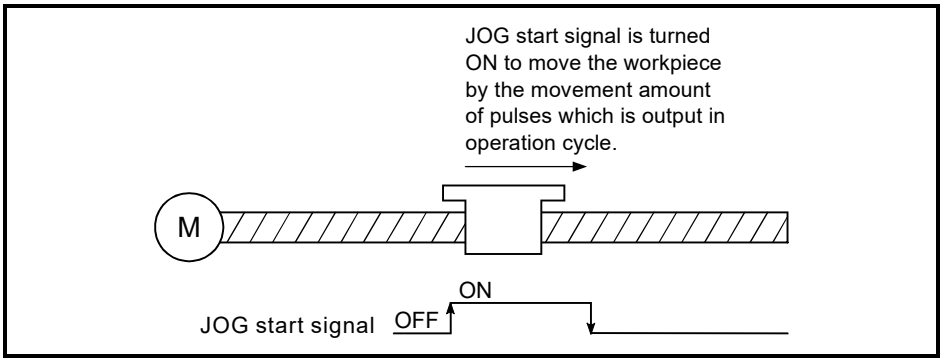

Fig. 11.2 Inching operation

[3] Manual pulse generator operation

"Manual pulse generator operation" is a control method in which positioning is carried out in response to the number of pulses input from a manual pulse generator (the number of input command is output). This operation is used for manual fine adjustment, etc., when carrying out accurate positioning to obtain the positioning address.

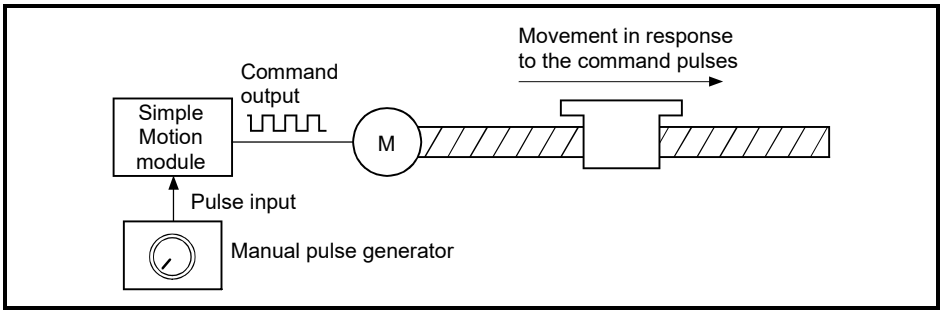

Fig. 11.3 Manual pulse generator control

■ Manual control sub functions

Refer to Section 3.2.5 "Combination of QD77MS main functions and sub functions" for details on "sub functions" that can be combined with manual control. Also refer to Chapter 13 "Control Sub Functions" for details on each sub function.

■ Carrying out manual control from GX Works2

"JOG operation", "Inching operation" and enabling/disabling of the "manual pulse generator operation" can be executed from GX Works2 test function.
Refer to the help in "Simple Motion Module Setting Tool" of GX Works2 for details on manual control from GX Works2.

■ Monitoring manual control

Refer to Section 5.6 "List of monitor data" when directly monitoring the buffer memory using GX Works2.
Also refer to the help in "Simple Motion Module Setting Tool" of GX Works2 when monitoring with the monitor functions of GX Works2.

11.2 JOG operation

11.2.1 Outline of JOG operation

■ JOG operation

In JOG operation, the forward run JOG start signal or reverse run JOG start signal turns ON, causing pulses to be output to the servo amplifier from the Simple Motion module while the signal is ON. The workpiece is then moved in the designated direction.

Signal	QD77MS2	QD77MS4	QD77MS16
Forward run JOG start signal	Y8, YA	Y8, YA, YC, YE	[Cd.181] Forward run JOG start
Reverse run JOG start signal	Y9, YB	Y9, YB, YD, YF	[Cd.182] Reverse run JOG start

The following shows examples of JOG operation.

1)	When the START signal turns ON, acceleration begins in the direction designated by the START signal, and continues for the acceleration time designated in "[Pr.32] JOG operation acceleration time selection". At this time, the BUSY signal changes from OFF to ON.
2)	When the workpiece being accelerated reaches the speed set in "[Cd.17] JOG speed", the movement continues at this speed. The constant speed movement takes place at 2) and 3).
3)	When the START signal is turned OFF, deceleration begins from the speed set in "[Cd.17] JOG speed", and continues for the deceleration time designated in "[Pr.33] JOG operation deceleration time selection".
4)	The operation stops when the speed becomes "0". At this time, the BUSY signal changes from ON to OFF.

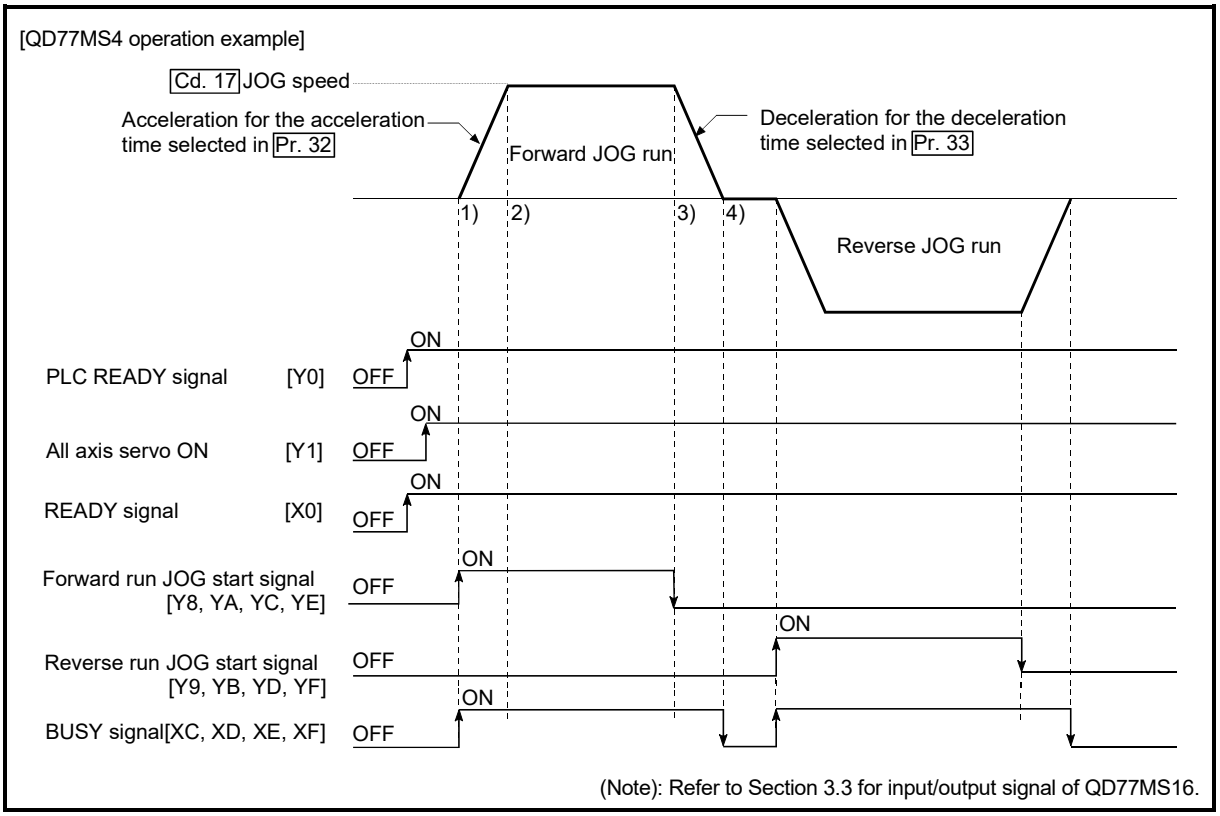

Fig. 11.4 JOG operation

Important

Use the hardware stroke limit function when carrying out JOG operation near the upper or lower limits. (Refer to Section "13.4.4".)
If the hardware stroke limit function is not used, the workpiece may exceed the moving range, causing an accident.

■ Precautions during operation

The following details must be understood before carrying out JOG operation.

(1) For safety, set a small value to "[Cd.17] JOG speed" at first and check the movement. Then gradually increase the value.
(2) The error "Outside JOG speed range" (error code: 300) will occur and the operation will not start if the "JOG speed" is outside the setting range at the JOG start.
(3) The error "JOG speed limit value error" (error code: 956) will occur and the operation will not start if "[Pr.31] JOG speed limit value" is set to a value larger than "[Pr.8] Speed limit value".
(4) If "[Cd.17] JOG speed" exceeds the speed set in "[Pr.31] JOG speed limit value", the workpiece will move at the "[Pr.31] JOG speed limit value" and the warning "JOG speed limit value" (warning code: 301) will occur in the Simple Motion module.
(5) The JOG operation can be continued even if an "Axis warning" has occurred.
(6) Set a "0" in "[Cd.16] Inching movement amount". If a value other than "0" is set, the operation will become an inching operation (Refer to Section 11.3 "Inching operation").

■ Operations when stroke limit error occurs

When the operation is stopped by hardware stroke limit error or software stroke limit error, the JOG operation can execute in an opposite way (direction within normal limits) after an error reset. (An error will occur again if JOG start signal is turned ON in a direction to outside the stroke limit.)

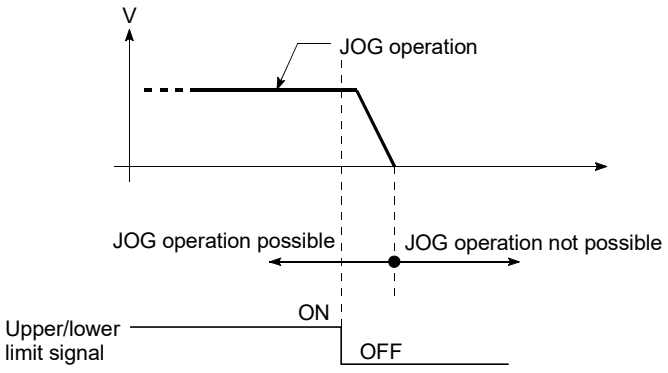

■ JOG operation timing and processing time

The following drawing shows details of the JOG operation timing and processing time.

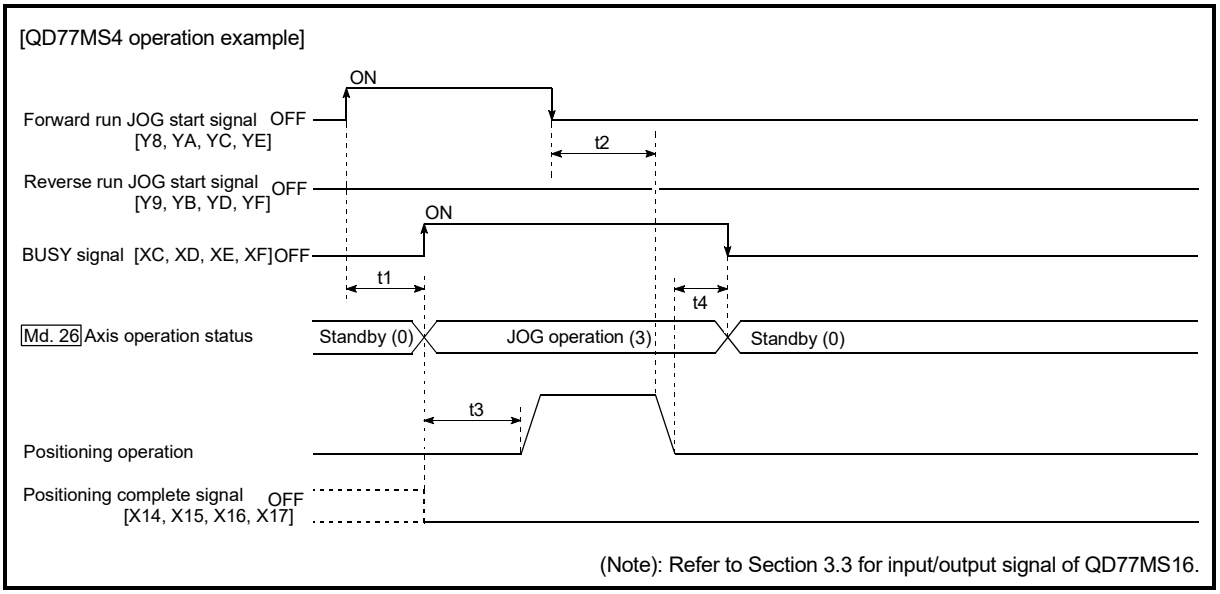

Fig. 11.5 JOG operation timing and processing times

Normal timing times Unit: [ms]

	Operation cycle	t1	t2	t3	t4
QD77MS2	0.88	0.4 to 0.9	0 to 0.9	1.8 to 2.7	0 to 0.9
	1.77	0.4 to 1.4	0 to 1.8	3.2 to 3.9	0 to 1.8
QD77MS4	0.88	0.4 to 0.9	0 to 0.9	1.8 to 2.7	0 to 0.9
	1.77	0.4 to 1.4	0 to 1.8	3.2 to 3.9	0 to 1.8
QD77MS16	0.88	0.4 to 0.9	0 to 0.9	1.8 to 2.7	0 to 0.9
	1.77	0.8 to 1.4	0 to 1.8	3.2 to 3.9	0 to 1.8

- Delays may occur in the t1 timing time due to the operation status of other axes.

11.2.2 JOG operation execution procedure

The JOG operation is carried out by the following procedure.

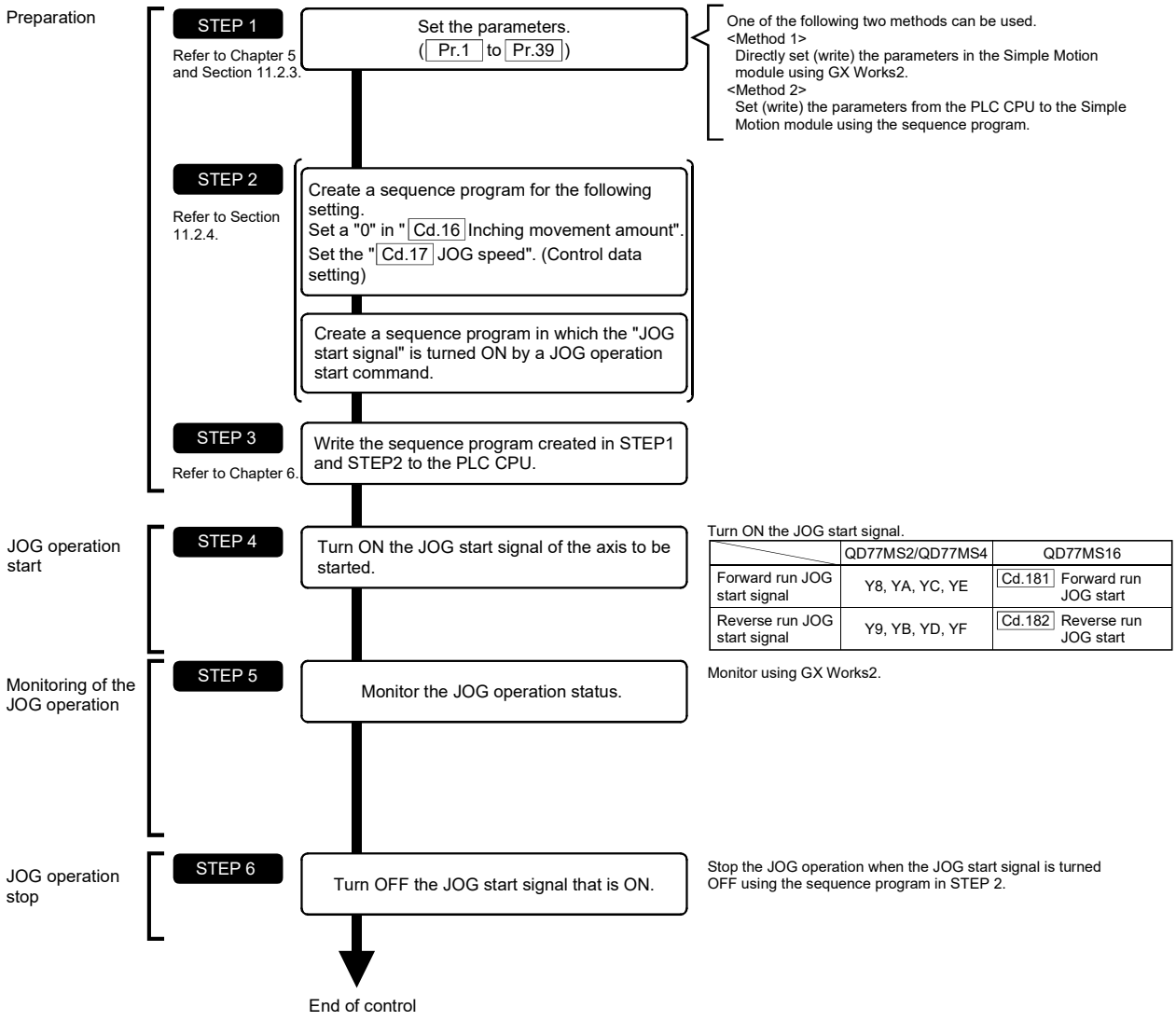

REMARK

- Mechanical elements such as limit switches are considered as already installed.
- Parameter settings work in common for all control using the Simple Motion module.

11.2.3 Setting the required parameters for JOG operation

The "Positioning parameters" must be set to carry out JOG operation.
The following table shows the setting items of the required parameters for carrying out JOG operation. Parameters not shown below are not required to be set for carrying out only JOG operation. (Set the initial value or a value within the setting range.)

Setting item			Setting requirement	Factory-set initial value (setting details)
Positioning parameters	[Pr.1]	Unit setting	◎	3 (PLS)
	[Pr.2]	Number of pulses per rotation (AP) (Unit: PLS)	◎	20000
	[Pr.3]	Movement amount per rotation (AL) (Unit: PLS)	◎	20000
	[Pr.4]	Unit magnification (AM)	◎	1 (1 times)
	[Pr.7]	Bias speed at start (Unit: PLS/s)	○	0
	[Pr.8]	Speed limit value (Unit: PLS/s)	◎	200000
	[Pr.9]	Acceleration time 0 (Unit: ms)	◎	1000
	[Pr.10]	Deceleration time 0 (Unit: ms)	◎	1000
	[Pr.11]	Backlash compensation amount (Unit: PLS)	○	0
	[Pr.12]	Software stroke limit upper limit value (Unit: PLS)	○	2147483647
	[Pr.13]	Software stroke limit lower limit value (Unit: PLS)	○	–2147483648
	[Pr.14]	Software stroke limit selection	○	0 (command position value)
	[Pr.15]	Software stroke limit valid/invalid setting	○	0 (valid)
	[Pr.17]	Torque limit setting value (Unit: %)	○	300
	[Pr.25]	Acceleration time 1 (Unit: ms)	○	1000
	[Pr.26]	Acceleration time 2 (Unit: ms)	○	1000
	[Pr.27]	Acceleration time 3 (Unit: ms)	○	1000
	[Pr.28]	Deceleration time 1 (Unit: ms)	○	1000
	[Pr.29]	Deceleration time 2 (Unit: ms)	○	1000
	[Pr.30]	Deceleration time 3 (Unit: ms)	○	1000
	[Pr.31]	JOG speed limit value (Unit: PLS/s)	◎	20000
	[Pr.32]	JOG operation acceleration time selection	◎	0 (acceleration time 0)
	[Pr.33]	JOG operation deceleration time selection	◎	0 (deceleration time 0)
	[Pr.34]	Acceleration/deceleration process selection	○	0 (trapezoidal acceleration/ deceleration processing)
	[Pr.35]	S-curve ratio (Unit: %)	○	100
	[Pr.36]	Rapid stop deceleration time (Unit: ms)	○	1000
	[Pr.37]	Stop group 1 rapid stop selection	○	0 (deceleration stop)
	[Pr.38]	Stop group 2 rapid stop selection	○	0 (deceleration stop)
	[Pr.39]	Stop group 3 rapid stop selection	○	0 (deceleration stop)

◎ : Setting always required.
○ : Set according to requirements (Set the initial value or a value within the setting range when not used.)

REMARK

- Parameter settings work in common for all controls using the Simple Motion module. When carrying out other controls ("major positioning control", "high-level positioning control", "HPR positioning control"), set the respective setting items as well.
- Parameters are set for each axis.
- Refer to Chapter 5 "Data Used for Positioning Control" for the setting details.

11.2.4 Creating start programs for JOG operation

A sequence program must be created to execute a JOG operation. Consider the "required control data setting", "start conditions" and "start time chart" when creating the program.
The following shows an example when a JOG operation is started for axis 1. ("[Cd.17] JOG speed" is set to "100.00mm/min" in the example shown.)

■ Required control data setting

The control data shown below must be set to execute a JOG operation. The setting is carried out with the sequence program.

Setting item		Setting value	Setting details	Buffer memory address	
				QD77MS2 QD77MS4	QD77MS16
[Cd.16]	Inching movement amount	0	Set "0".	1517+100n	4317+100n
[Cd.17]	JOG speed	10000	Set a value equal to or below the "[Pr.31] JOG speed limit value".	1518+100n 1519+100n	4318+100n 4319+100n

n: Axis No.-1

*: Refer to Section 5.7 "List of control data" for details on the setting details.

■ Start conditions

The following conditions must be fulfilled when starting. The required conditions must also be assembled in the sequence program, and the sequence program must be configured so the operation will not start if the conditions are not fulfilled.

Signal name		Signal state		Device	
				QD77MS2 QD77MS4	QD77MS16
Interface signal	PLC READY signal	ON	PLC CPU preparation completed	Y0	
	READY signal	ON	QD77MS preparation completed	X0	
	All axis servo ON	ON	All axis servo ON	Y1	
	Synchronization flag *	ON	QD77MS buffer memory The access is possible.	X1	
	Axis stop signal	OFF	Axis stop signal is OFF	Y4 to Y7	[Cd.180] Axis stop
	Start complete signal	OFF	Start complete signal is OFF	X10 to X13	[Md.31] Status: b14
	BUSY signal	OFF	QD77MS is not operating	XC to XF	X10 to X1F
	Error detection signal	OFF	There is no error	X8 to XB	[Md.31] Status: b13
	M code ON signal	OFF	M code ON signal is OFF	X4 to X7	[Md.31] Status: b12
External signal	Forced stop input signal	ON	There is no forced stop input	–	
	Stop signal	OFF	Stop signal is OFF	–	
	Upper limit (FLS)	ON	Within limit range	–	
	Lower limit (RLS)	ON	Within limit range	–	

*: If the PLC CPU is set to the asynchronous mode in the synchronization setting, this must be inserted in the program for interlocking. If it is set to the synchronous mode, it must not be inserted in the program for interlocking because it is turned ON when the PLC CPU executes calculation.

■ Start time chart

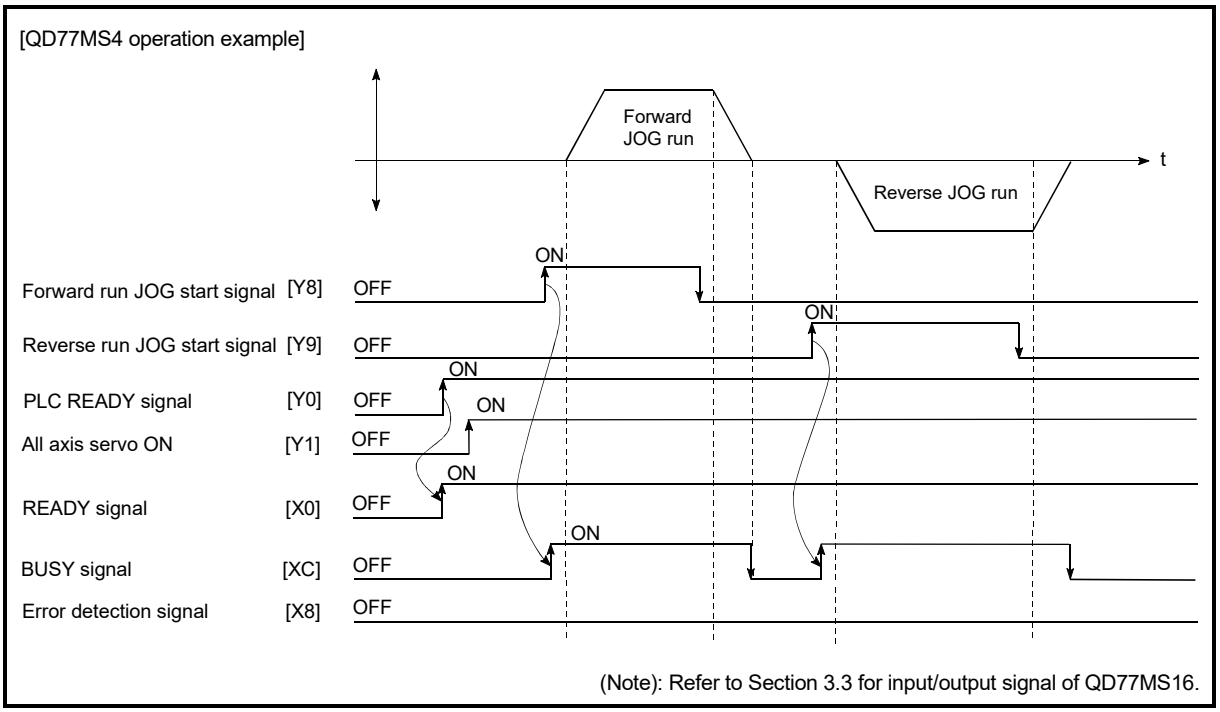

Fig. 11.6 JOG operation start time chart

■ Creating the program

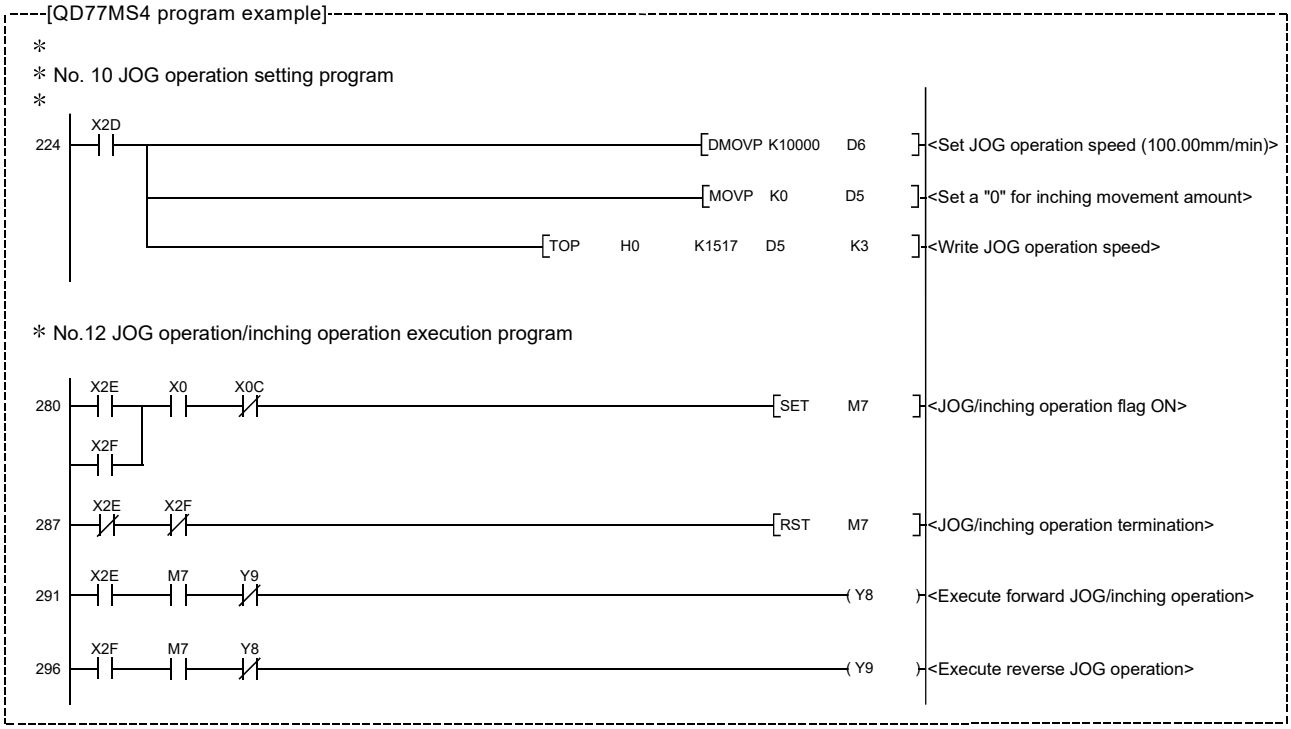

11.2.5 JOG operation example

■ When the "stop signal" is turned ON during JOG operation

When the "stop signal" is turned ON during JOG operation, the JOG operation will stop by the "deceleration stop" method.
If the JOG start signal is turned ON while the stop signal is ON, the error "Stop signal ON at start" (error code: 106) will occur.
The operation can be started by turning the stop signal OFF, and turning the JOG start signal from OFF to ON again.

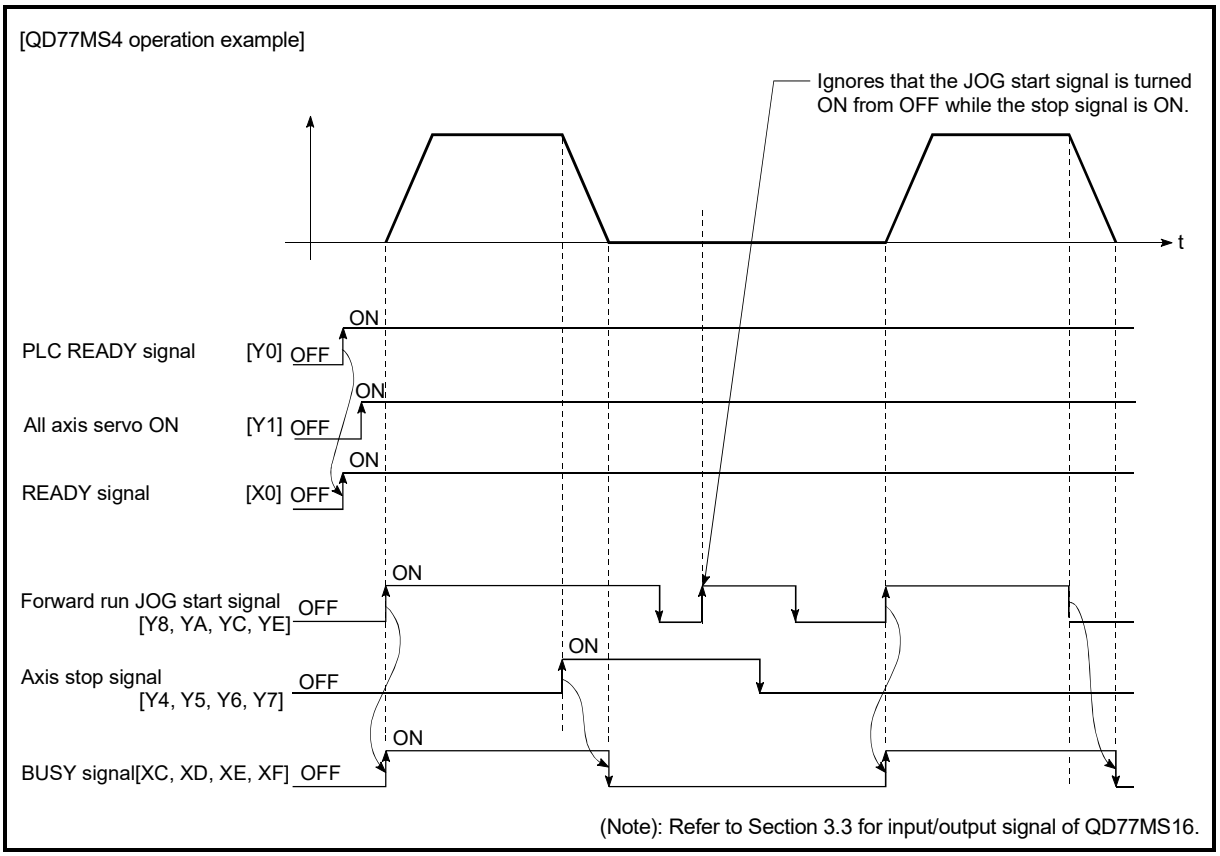

Fig. 11.7 Operation when the stop signal is turned ON during JOG operation

■ When both the "forward run JOG start signal" and "reverse run JOG start signal" are turned ON simultaneously for one axis

When both the "forward run JOG start signal" and "reverse run JOG start signal" are turned ON simultaneously for one axis, the "forward run JOG start signal" is given priority. In this case, the "reverse run JOG start signal" is validated when the BUSY signal of Simple Motion module is turned OFF.
If the forward run JOG operation is stopped due to stop by a stop signal or axis error, the reverse run JOG operation will not be executed even if the "reverse run JOG start signal" turns ON.

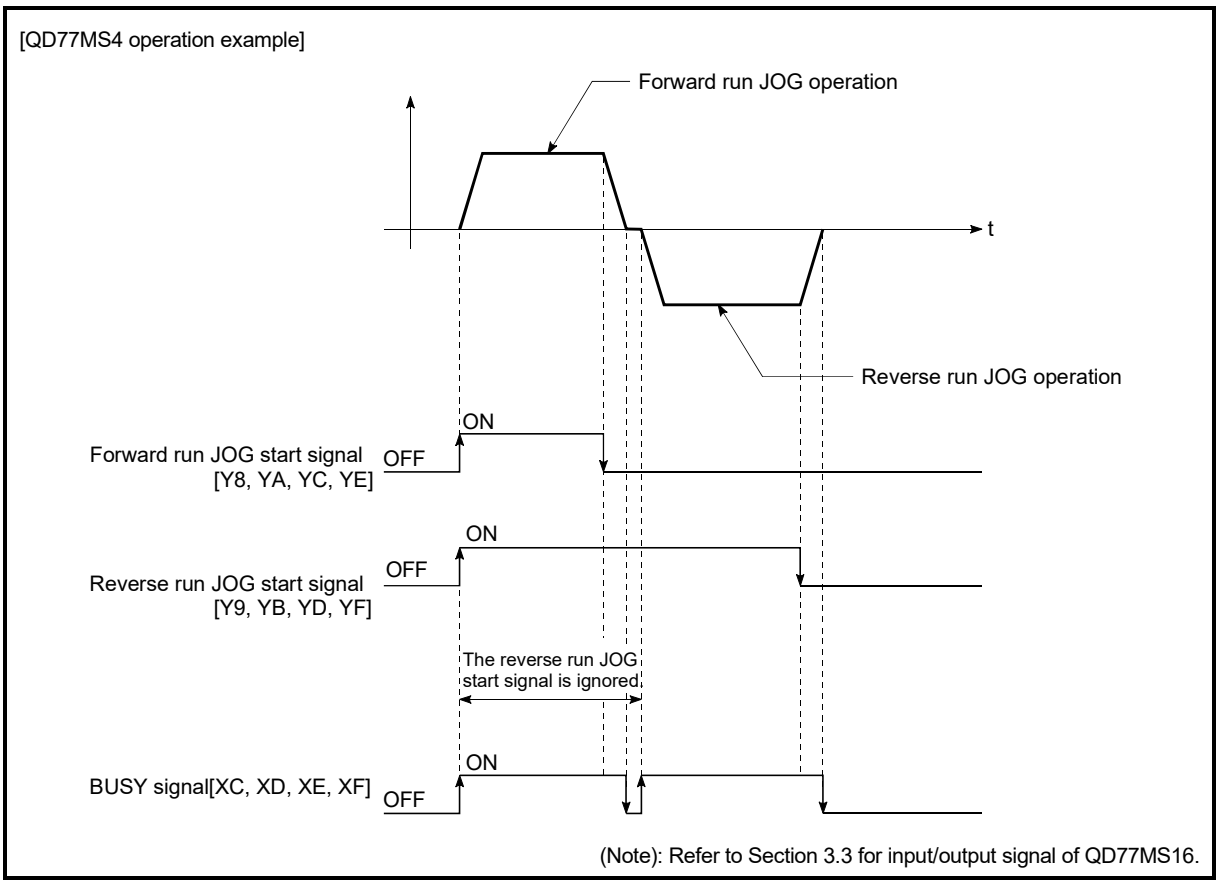

Fig. 11.8 Operation when both the forward run JOG start signal and reverse run JOG start signal are turned ON simultaneously

■ When the "JOG start signal" is turned ON again during deceleration caused by the ON → OFF of the "JOG start signal"

When the "JOG start signal" is turned ON again during deceleration caused by the ON → OFF of the "JOG start signal", the JOG operation will be carried out from the time the "JOG start signal" is turned ON.

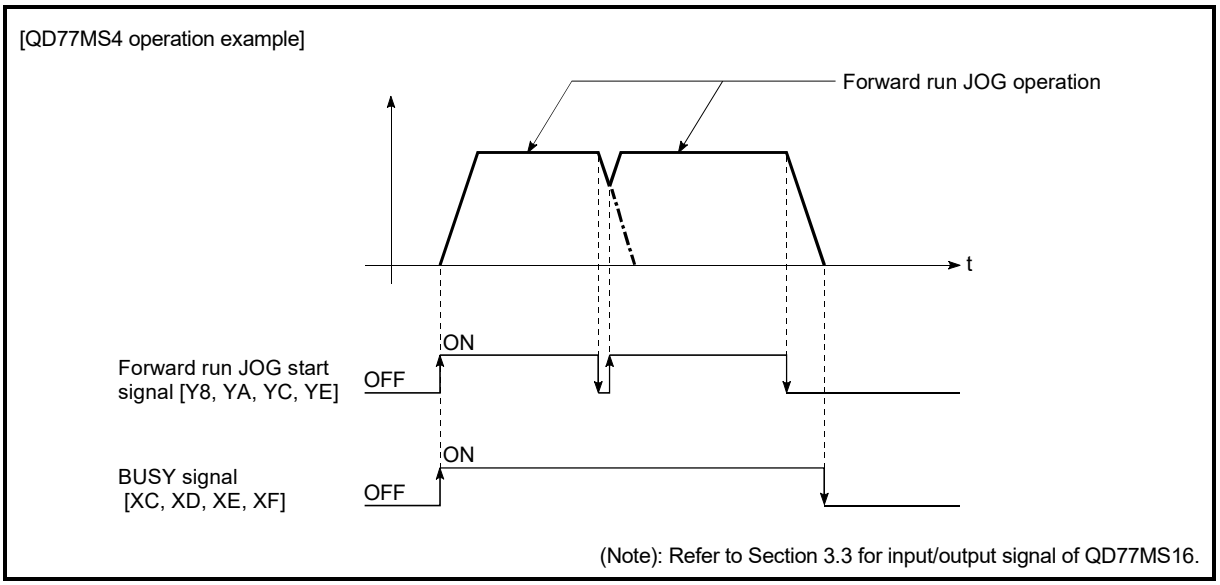

Fig. 11.9 Operation when the JOG start signal is turned ON during deceleration

■ When the "JOG start signal" is turned ON while the test function of GX Works2 is used

When the "JOG start signal" is turned ON while the test function of GX Works2 is used, it will be ignored and the JOG operation will not be carried out.

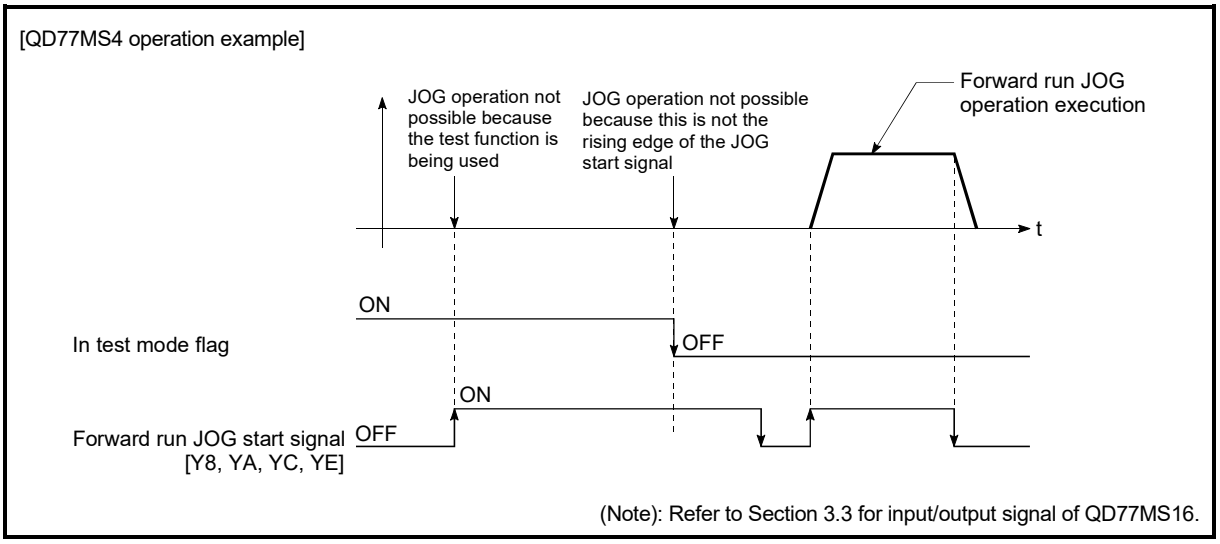

Fig. 11.10 Operation when the JOG start signal is turned ON while the test function is used

11.3 Inching operation

11.3.1 Outline of inching operation

■ Inching operation

In inching operation, pulses are output to the servo amplifier at operation cycle to move the workpiece by a designated movement amount after the forward run JOG start signal or reverse JOG start signal is turned ON.

Signal	QD77MS2	QD77MS4	QD77MS16
Forward run JOG start signal	Y8, YA	Y8, YA, YC, YE	[Cd.181] Forward run JOG start
Reverse run JOG start signal	Y9, YB	Y9, YB, YD, YF	[Cd.182] Reverse run JOG start

The following shows the example of inching operation.

1)	When the start signal is turned ON, inching operation is carried out in the direction designated by the start signal. In this case, BUSY signal is turned from OFF to ON.
2)	The workpiece is moved by a movement amount set in "[Cd.16] Inching movement amount".
3)	The workpiece movement stops when the speed becomes "0". In this case, BUSY signal is turned from ON to OFF. The positioning complete signal is turned from OFF to ON.
4)	The positioning complete signal is turned from ON to OFF after a time set in "[Pr.40] Positioning complete signal output time" has been elapsed.

[QD77MS4 operation example]

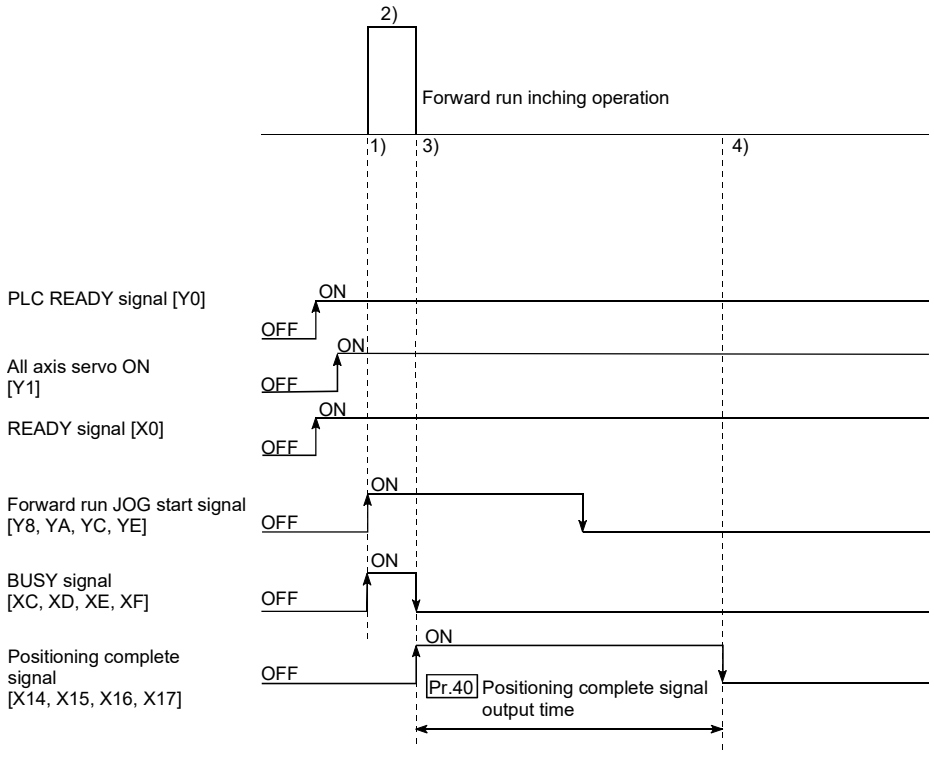

(Note): Refer to Section 3.3 for input/output signal of QD77MS16.

Fig. 11.11 Inching operation

Important

When the inching operation is carried out near the upper or lower limit, use the hardware stroke limit function (Refer to Section 13.4.4).
If the hardware stroke limit function is not used, the workpiece may exceed the movement range, and an accident may result.

■ Precautions during operation

The following details must be understood before inching operation is carried out.

(1) Acceleration/deceleration processing is not carried out during inching operation.
(Commands corresponding to the designated inching movement amount are output at operation cycle. When the movement direction of inching operation is reversed and backlash compensation is carried out, the backlash compensation amount and inching movement amount are output at the same operation cycle.)
The "[Cd.17] JOG speed" is ignored even if it is set. The error "Inching movement amount error" (error code: 301) will occur in the following case.
([Cd.16] Inching movement amount) x (A) > ([Pr.31] JOG speed limit value)

However, (A) is as follows.

Unit : [ms]

	Operation cycle	
	0.88	1.77
When unit is set to PLS	1125	562.5
When unit is set to degree and the "[Pr.83] Speed control 10 x multiplier setting for degree axis" is valid	67.5	33.75
When unit setting is other than the above	675	337.5

(2) Set a value other than a "0" in "[Cd.16] Inching movement amount".
If a "0" is set, the operation will become JOG operation (Refer to Section 11.2 "JOG operation").

■ Operations when stroke limit error occurs

When the operation is stopped by hardware stroke limit error or software stroke limit error, the inching operation can be performed in an opposite way (direction within normal limits) after an error reset.
(An error will occur again if JOG start signal is turned ON in a direction to outside the stroke limit.)

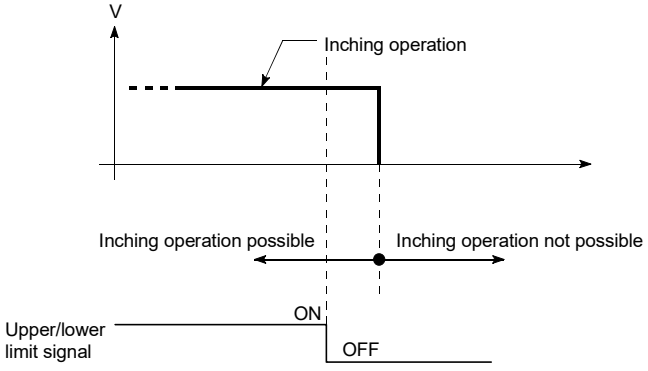

■ Inching operation timing and processing times

The following drawing shows the details of the inching operation timing and processing time.

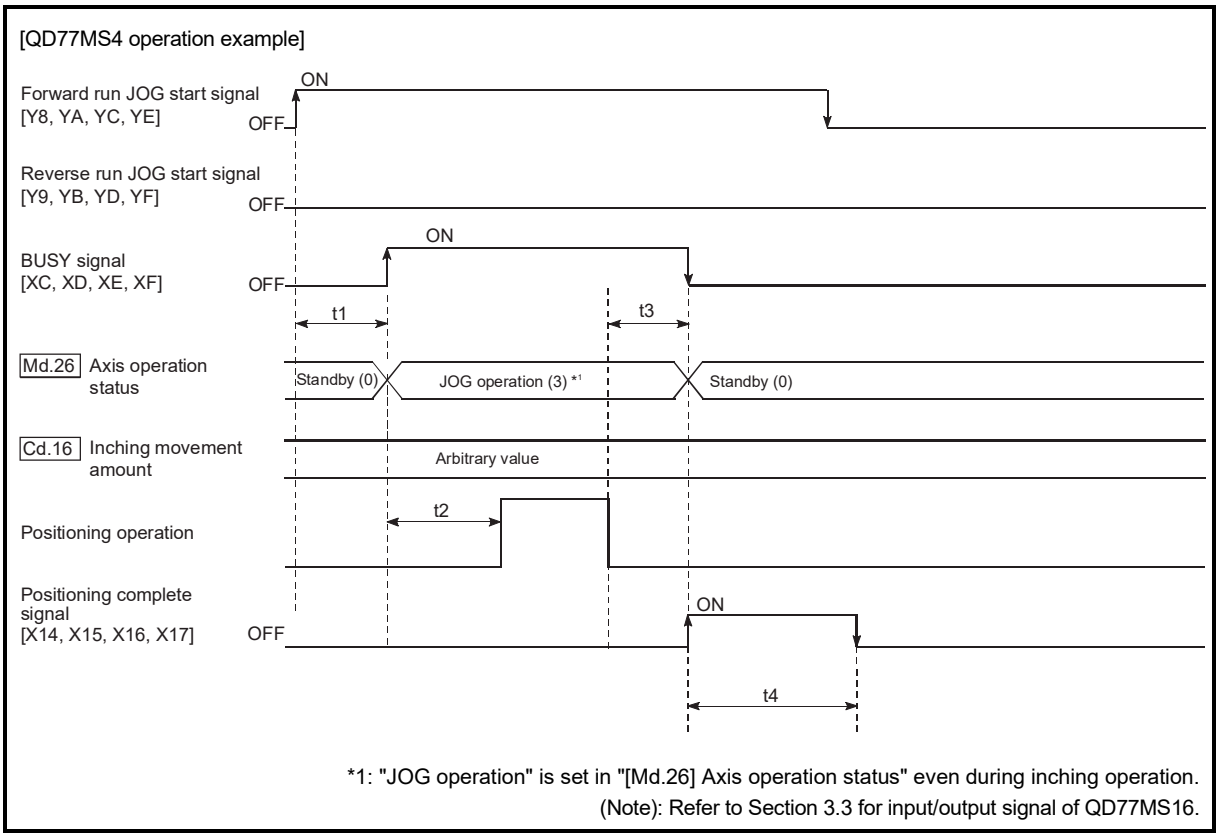

Fig. 11.12 Inching operation timing and processing times

Normal timing times Unit : [ms]

	Operation cycle	t1	t2	t3	t4
QD77MS2	0.88	0.4 to 0.9	1.8 to 2.7	0 to 0.9	Follows parameters
	1.77	0.4 to 1.4	3.2 to 3.9	0 to 1.8	Follows parameters
QD77MS4	0.88	0.4 to 0.9	1.8 to 2.7	0 to 0.9	Follows parameters
	1.77	0.4 to 1.4	3.2 to 3.9	0 to 1.8	Follows parameters
QD77MS16	0.88	0.4 to 0.9	1.8 to 2.7	0 to 0.9	Follows parameters
	1.77	0.8 to 1.4	3.2 to 3.9	0 to 1.8	Follows parameters

- Depending on the operating statuses of the other axes, delay may occur in the t1 timing time.

11.3.2 Inching operation execution procedure

The inching operation is carried out by the following procedure.

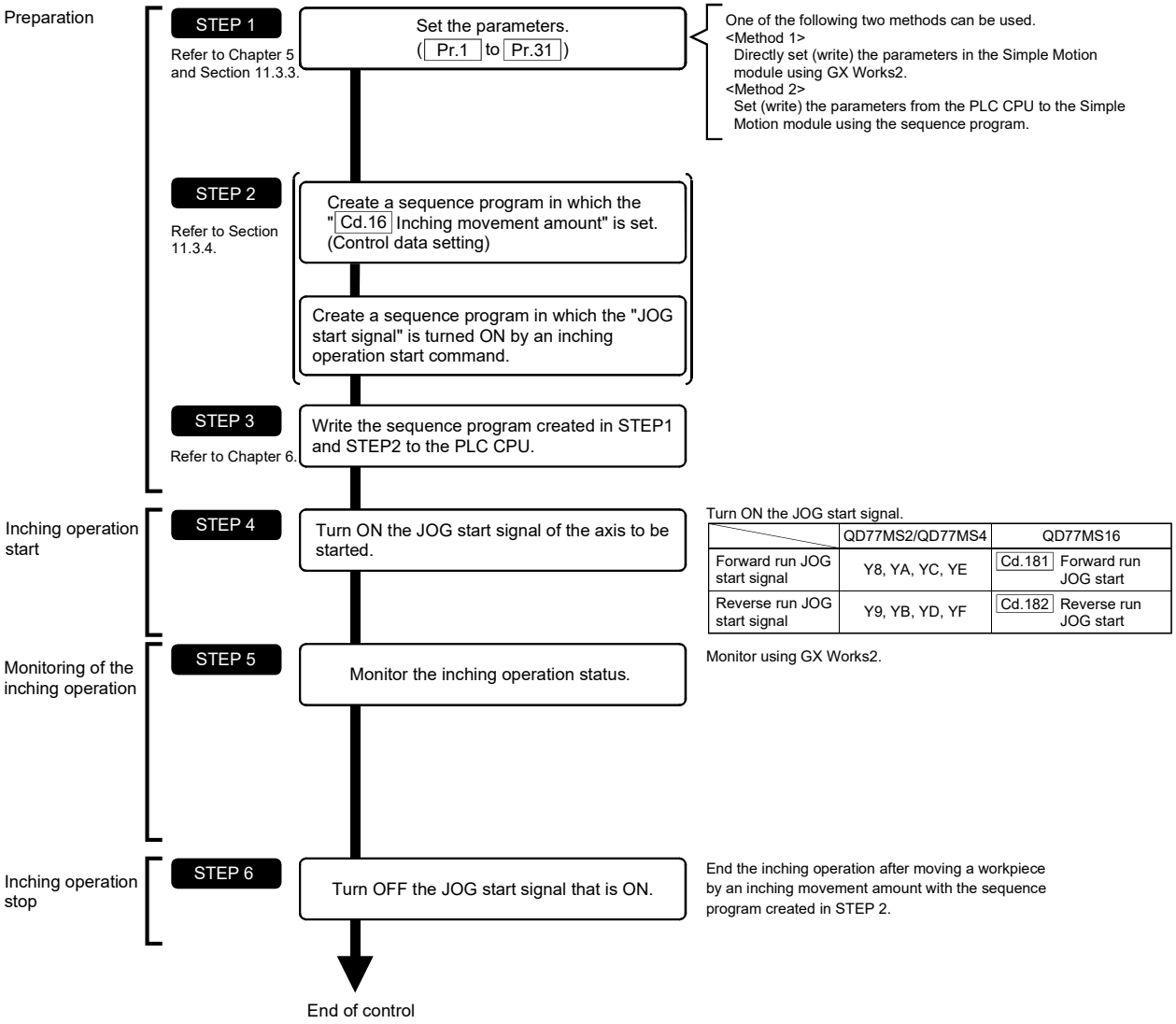

REMARK

- Mechanical elements such as limit switches are considered as already installed.
- Parameter settings work in common for all control using the Simple Motion module.

11.3.3 Setting the required parameters for inching operation

The "Positioning parameters" must be set to carry out inching operation.
The following table shows the setting items of the required parameters for carrying out inching operation. Parameters not shown below are not required to be set for carrying out only inching operation. (Set the initial value or a value within the setting range.)

Setting item			Setting requirement	Factory-set initial value (setting details)
Positioning parameters	[Pr.1]	Unit setting	◎	3 (PLS)
	[Pr.2]	Number of pulses per rotation (AP) (Unit: PLS)	◎	20000
	[Pr.3]	Movement amount per rotation (AL) (Unit: PLS)	◎	20000
	[Pr.4]	Unit magnification (AM)	◎	1 (1 times)
	[Pr.11]	Backlash compensation amount (Unit: PLS)	○	0
	[Pr.12]	Software stroke limit upper limit value (Unit: PLS)	○	2147483647
	[Pr.13]	Software stroke limit lower limit value (Unit: PLS)	○	–2147483648
	[Pr.14]	Software stroke limit selection	○	0 (command position value)
	[Pr.15]	Software stroke limit valid/invalid setting	○	0 (valid)
	[Pr.17]	Torque limit setting value (Unit: %)	○	300
	[Pr.31]	JOG speed limit value (Unit: PLS/s)	◎	20000

◎ : Setting always required.
○ : Set according to requirements (Set the initial value or a value within the setting range when not used.)

REMARK

- Positioning parameter settings work in common for all controls using the Simple Motion module. When carrying out other controls ("major positioning control", "high-level positioning control", and "HPR control"), set the respective setting items as well.
- Parameters are set for each axis.
- Refer to Chapter 5 "Data Used for Positioning Control" for the setting details.

11.3.4 Creating a program to start the inching operation

A sequence program must be created to execute an inching operation. Consider the "required control data setting", "start conditions", and "start time chart" when creating the program.
The following shows an example when an inching operation is started for axis 1. (The example shows the inching operation when a "10.0 μm" is set in "[Cd.16] Inching movement amount".)

■ Required control data setting

The control data shown below must be set to execute an inching operation. The setting is carried out with the sequence program.

Setting item		Setting value	Setting details	Buffer memory address	
				QD77MS2 QD77MS4	QD77MS16
[Cd.16]	Inching movement amount	100	Set the setting value so that the JOG speed limit value is not increased larger than the maximum output pulse	1517+100n	4317+100n

n: Axis No.-1

*: Refer to Section 5.7 "List of control data" for information on setting details.

■ Start conditions

The following conditions must be fulfilled when starting. The required conditions must also be assembled in the sequence program, and the sequence program must be configured so the operation will not start if the conditions are not fulfilled.

Signal name		Signal state		Device	
				QD77MS2 QD77MS4	QD77MS16
Interface signal	PLC READY signal	ON	PLC CPU preparation completed	Y0	
	READY signal	ON	QD77MS preparation completed	X0	
	All axis servo ON	ON	All axis servo ON	Y1	
	Synchronization flag *	ON	Accessible to QD77MS buffer memory	X1	
	Axis stop signal	OFF	Axis stop signal is OFF	Y4 to Y7	[Cd.180] Axis stop
	Start complete signal	OFF	Start complete signal is OFF	X10 to X13	[Md.31] Status: b14
	BUSY signal	OFF	QD77MS is not operating	XC to XF	X10 to X1F
	Positioning complete signal	OFF	Positioning complete signal is OFF	X14 to X17	[Md.31] Status: b15
	Error detection signal	OFF	There is no error	X8 to XB	[Md.31] Status: b13
	M code ON signal	OFF	M code ON signal is OFF	X4 to X7	[Md.31] Status: b12
External signal	Forced stop input signal	ON	There is no forced stop input	–	
	Stop signal	OFF	Stop signal is OFF	–	
	Upper limit (FLS)	ON	Within limit range	–	
	Lower limit (RLS)	ON	Within limit range	–	

*: If the PLC CPU is set to the asynchronous mode in the synchronization setting, this must be inserted in the program for interlocking. If it is set to the synchronous mode, it must not be inserted in the program for interlocking because it is turned ON when the PLC CPU executes calculation.

■ Start time chart

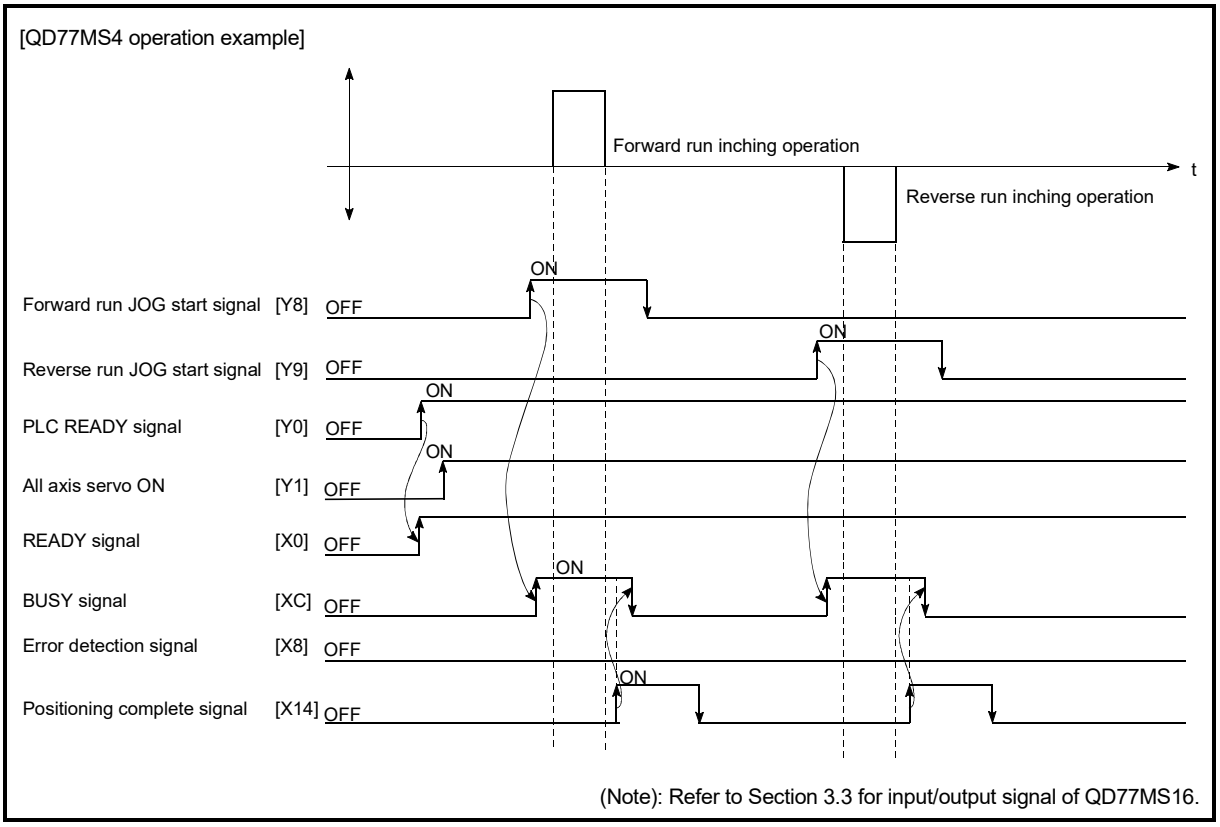

Fig. 11.13 Inching operation start time chart

■ Creating the program

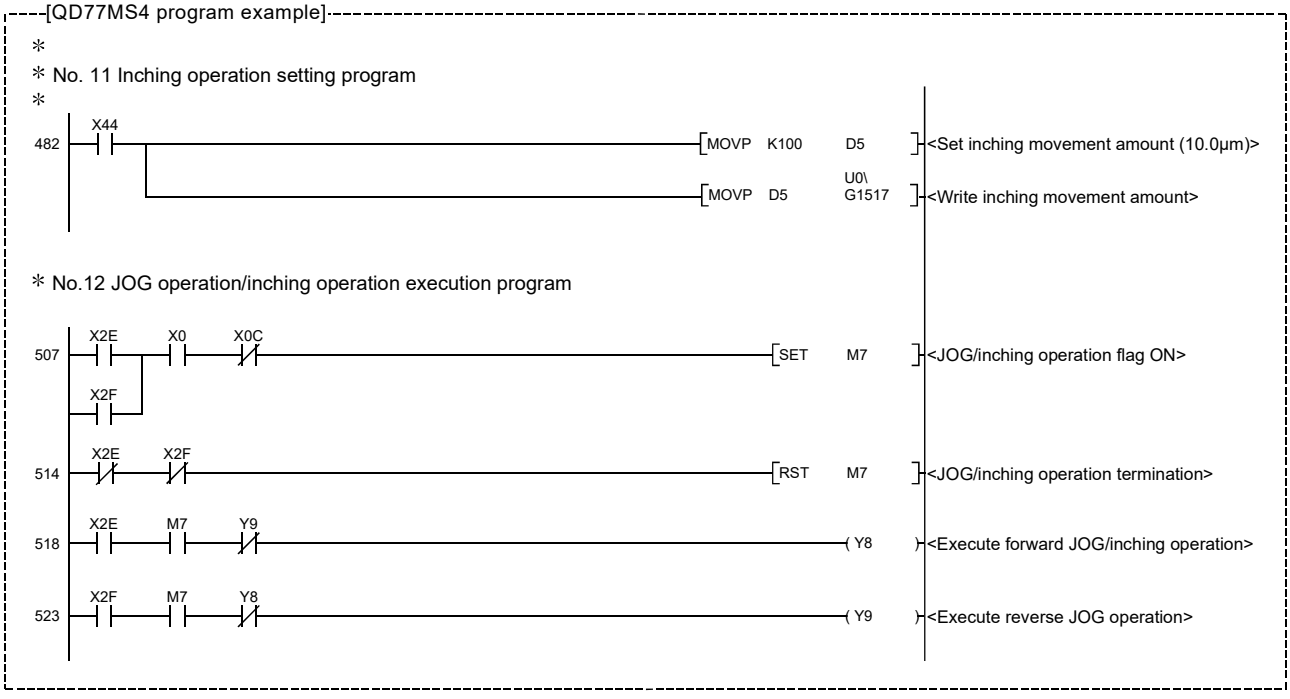

11.3.5 Inching operation example

■ When executing inching operation while stop signal is turned ON

If the JOG start signal is turned ON while the stop signal is ON, the error "Stop signal ON at start" (error code: 106) will occur.
The inching operation can be re-started when the stop signal is turned OFF and the JOG start signal is turned ON from OFF.

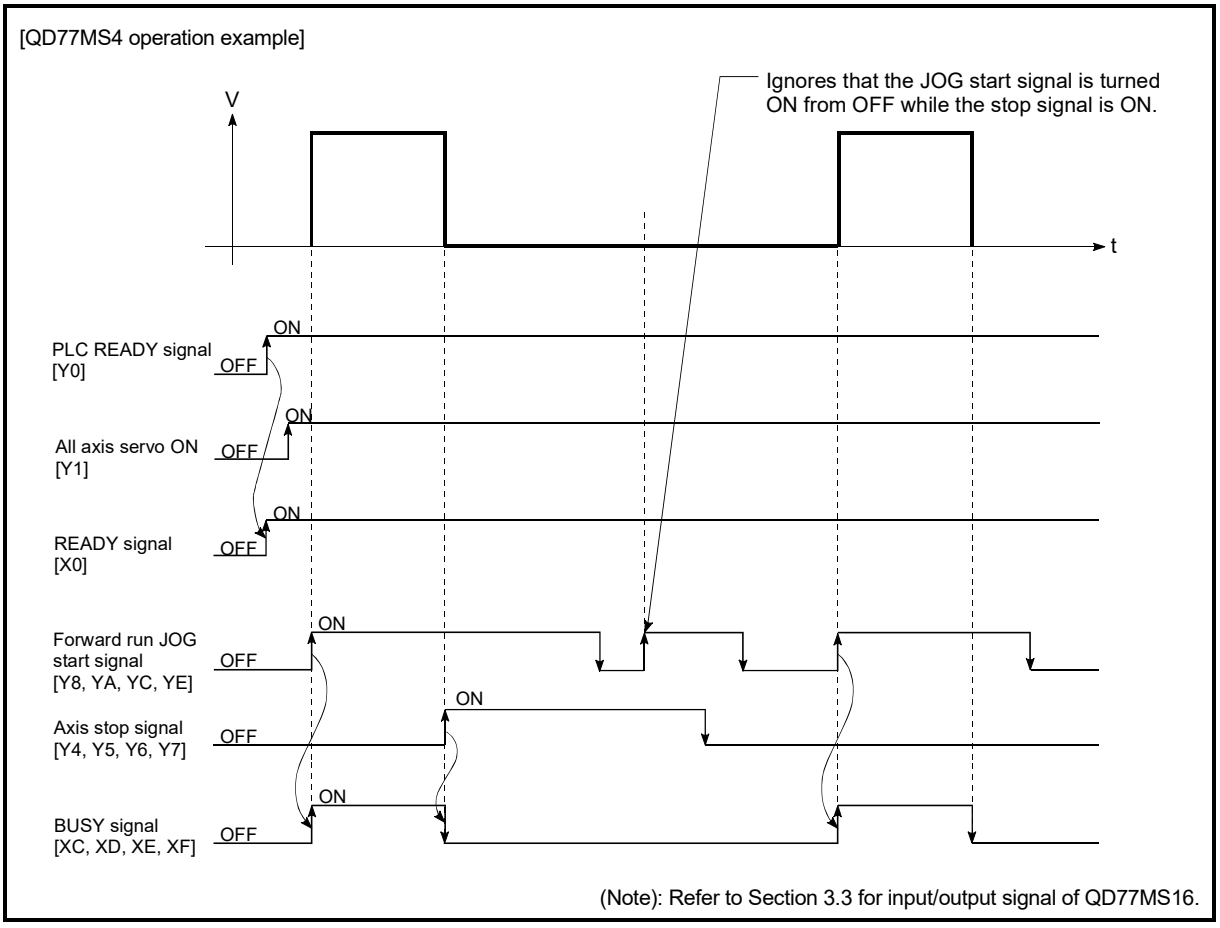

Fig. 11.14 Operation when executing inching operation while stop signal is turned ON

■ When the "JOG start signal" is turned ON while the test function of GX Works2 is used

When the "JOG star signal" is turned ON while the test function is used, it will be ignored and the inching operation will not be carried out.

[QD77MS4 operation example]

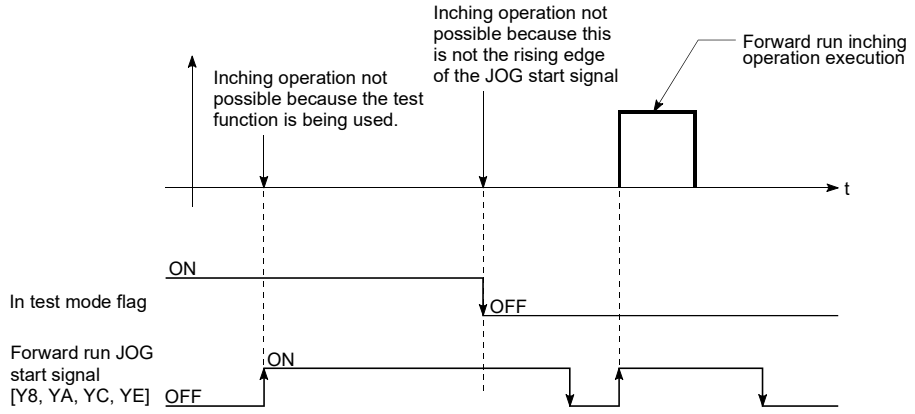

(Note): Refer to Section 3.3 for input/output signal of QD77MS16.

Fig. 11.15 Operation when the JOG start signal is turned ON while the test function is used

11.4 Manual pulse generator operation

11.4.1 Outline of manual pulse generator operation

■ Manual pulse generator operation

In manual pulse generator operations, pulses are input to the Simple Motion module from the manual pulse generator. This causes the same number of input command to be output from the Simple Motion module to the servo amplifier, and the workpiece is moved in the designated direction.
The following shows an example of manual pulse generator operation.

1)	When "[Cd.21] Manual pulse generator enable flag" is set to "1", the BUSY signal turns ON and the manual pulse generator operation is enabled.
2)	The workpiece is moved corresponding to the number of pulses input from the manual pulse generator.
3)	The workpiece movement stops when no more pulses are input from the manual pulse generator.
4)	When "[Cd.21] Manual pulse generator enable flag" is set to "0", the BUSY signal turns OFF and the manual pulse generator operation is disabled.

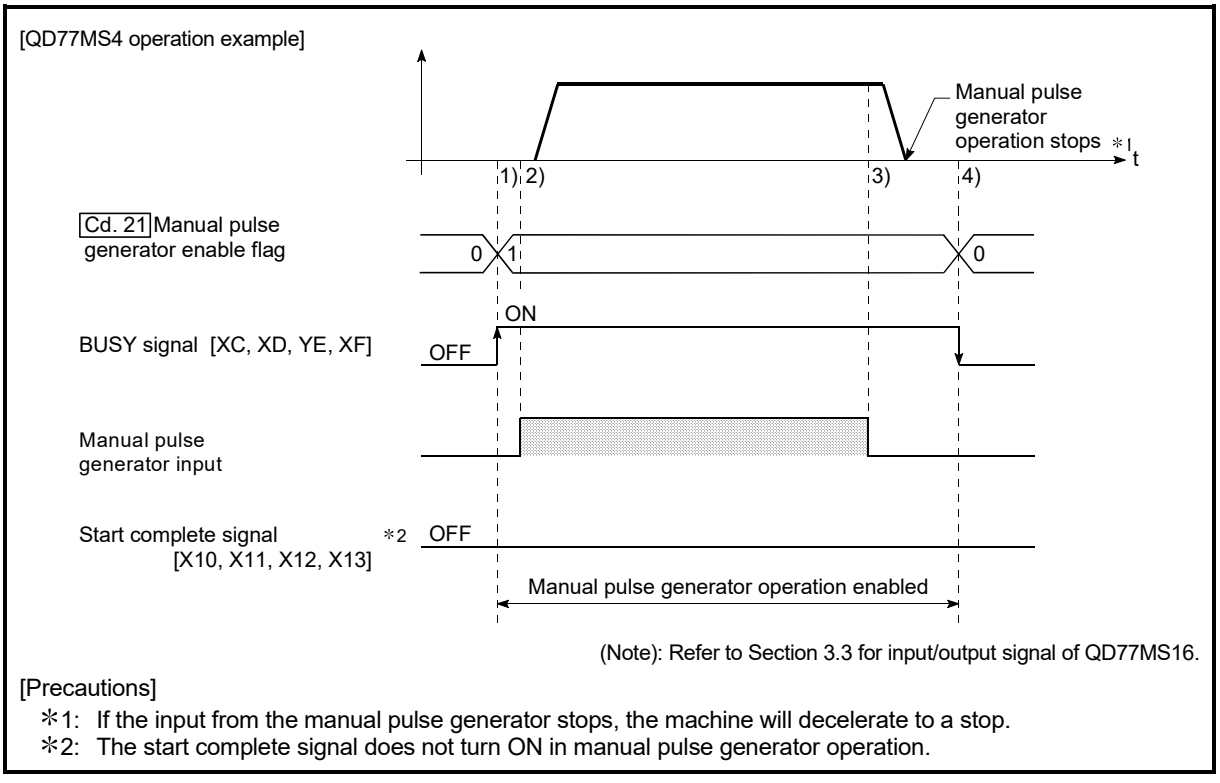

Fig. 11.16 Manual pulse generator operation

Important

Create the sequence program so that "[Cd.21] Manual pulse generator enable flag" is always set to "0" (disabled) when a manual pulse generator operation is not carried out.
Mistakenly touching the manual pulse generator when the "manual pulse generator enable flag" is set to "1" (enable) can cause accidents or incorrect positioning.

■ Restricted items

A pulse generator such as a manual pulse generator is required to carry out manual pulse generator operation.

■ Precautions during operation

The following details must be understood before carrying out manual pulse generator operation.

(1) The speed during manual pulse generator operation is not limited by the "[Pr.8] Speed limit value".

(2) If "[Cd.21] Manual pulse generator enable flag" is turned ON while the Simple Motion module is BUSY (BUSY signal ON), the warning "Start during operation" (warning code: 100) will occur.

(3) If a stop factor occurs during manual pulse generator operation, the operation will stop, and the BUSY signal will turn OFF.
At this time, "[Cd.21] Manual pulse generator enable flag" will remain ON. However, manual pulse generator operation will not be possible. To carry out manual pulse generator operation again, measures must be carried out to eliminate the stop factor. Once eliminated, the operation can be carried out again by turning "[Cd.21] Manual pulse generator enable flag" ON → OFF → ON.
(Note that this excludes hardware/software stroke limit error.)

(4) Command will not be output if an error occurs when the manual pulse generator operation starts.

Important

The speed command is issued according to the input from the manual pulse generator irrelevant of the speed limit setting.
When the speed command is larger than 62914560 [PLS/s], the servo alarm "Command frequency error" (alarm No.: 35) will occur.
The following calculation formula is used to judge whether or not a servo alarm will occur.

$$\text{(Speed command)} = \left(\begin{array}{l}\text{Number of}\\ \text{input pulses}\\ \text{for one}\\ \text{second}\end{array}\right) \times \left(\begin{array}{l}\text{Manual pulse}\\ \text{generator 1}\\ \text{pulse input}\\ \text{magnification}\end{array}\right) \times \left(\begin{array}{l}\text{Manual pulse}\\ \text{generator 1}\\ \text{pulse movement}\\ \text{amount}\end{array}\right) \times \left(\frac{\text{Number of pulses per rotation}}{\text{Movement amount per rotation}}\right)$$

If a large value is set to the manual pulse generator 1 pulse input magnification, there is a high possibility of the servo alarm "Command frequency error" (alarm No.: 35) occurrence. Note that the servomotor does not work rapidly by rapid pulse input even if the servo alarm does not occur.

REMARK

- One Simple Motion module can be connected to one manual pulse generator.
- The Simple Motion module can simultaneously command to servo amplifier (QD77MS2: Axis 1 to 2, QD77MS4: Axis 1 to 4, QD77MS16: Axis 1 to 16) by one manual pulse generator.
  (Simultaneous operation (QD77MS2: 1 axis to 2 axes, QD77MS4: 1 axis to 4 axes, QD77MS16: 1 axis to 16 axes) is possible.)

■ Operations when stroke limit error occurs

When the hardware stroke limit error or the software stroke limit error is detected (Note-1) during operation, the operation will decelerate to a stop. However, in case of "[Md.26] Axis operation status", "Manual pulse generator operation" will continue (Note-1). After stopping, input pulses from a manual pulse generator to the outside direction of the limit range are not accepted, but operation can be executed within the range.

(Note-1): Only when the command position value or the feed machine value overflows or underflows during deceleration, the manual pulse generator operation will terminate as "error occurring". To carry out manual pulse generator operation again, "[Cd.21] Manual pulse generator enable flag" must be turned OFF once and turn ON.

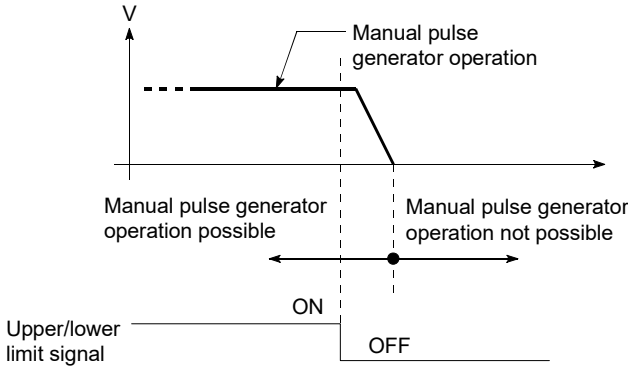

■ Manual pulse generator operation timing and processing time

The following drawing shows details of the manual pulse generator operation timing and processing time.

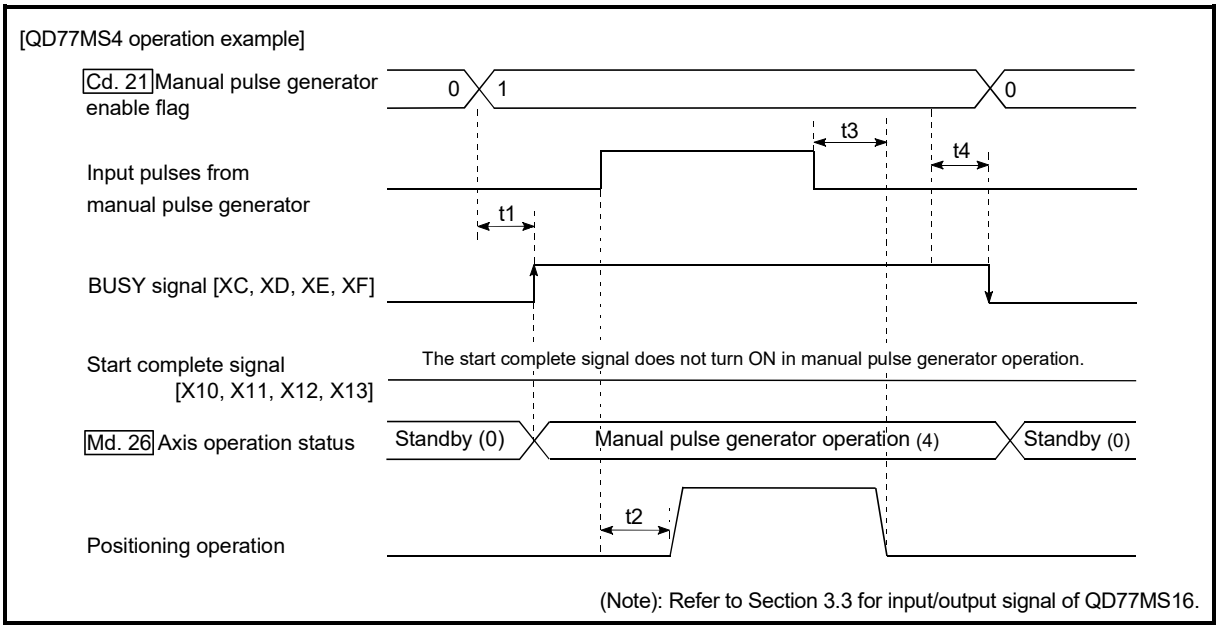

Fig. 11.17 Manual pulse generator operation timing and processing times

Normal timing times Unit : [ms]

	Operation cycle	t1	t2	t3	t4
QD77MS2	0.88	0.6 to 0.9	10.0 to 15.0	18.0 to 25.0	9.6
	1.77	0.6 to 1.8	10.0 to 15.0	18.0 to 25.0	9.6
QD77MS4	0.88	0.6 to 0.9	10.0 to 15.0	18.0 to 25.0	9.6
	1.77	0.6 to 1.8	10.0 to 15.0	18.0 to 25.0	9.6
QD77MS16	0.88	0.6 to 0.9	10.0 to 15.0	18.0 to 25.0	9.6
	1.77	0.8 to 1.8	10.0 to 15.0	18.0 to 25.0	9.6

- Delays may occur in the t1 timing time due to the operation status of other axes.

■ Position control by manual pulse generator operation

In manual pulse generator operation, the position is moved by a "manual pulse generator 1 pulse movement amount" per pulse. The command position value in the positioning control by manual pulse generator operation can be calculated using the expression shown below.

Command position value = Number of input pulses
× [Cd.20] Manual pulse generator 1 pulse input magnification
× Manual pulse generator 1 pulse movement amount

[Pr.1] Unit setting	mm	inch	degree	PLS
Manual pulse generator 1 pulse movement amount	0.1μm	0.00001inch	0.00001degree	1PLS

For example, when "[Pr.1] Unit setting" is mm and "[Cd.20] Manual pulse generator 1 pulse input magnification" is 2, and 100 pulses are input from the manual pulse generator, the command position value is as follows.

100 × 2 × 0.1 = 20 [μm] ([Md.20] Command position value=200)

The number of pulses output actually to the servo amplifier is "Manual pulse generator 1pulse movement amount/movement amount per pulse".
The movement amount per pulse can be calculated using the expression shown below.

$$\text{Movement amount per pulse} = \frac{\text{[Pr.3] Movement amount per rotation(AL)}}{\text{[Pr.2] Number of pulses per rotation(AP)}} \times \text{[Pr.4] Unit magnification(AM)}$$

For example, when "[Pr.1] Unit setting" is mm and the movement amount per pulse is 1μm, 0.1/1 = 1/10, i.e., the output to the servo amplifier per pulse from the manual pulse generator is 1/10pulse. Thus, the Simple Motion module outputs 1pulse to the servo amplifier after receiving 10pulses from the manual pulse generator.

■ Speed control by manual pulse generation operation

The speed during positioning control by manual pulse generator operation is a speed corresponding to the number of input pulses per unit time, and can be obtained using the following equation.

Output command frequency = Input frequency × [Cd.20] Manual pulse generator 1 pulse input magnification

11.4.2 Manual pulse generator operation execution procedure

The manual pulse generator operation is carried out by the following procedure.

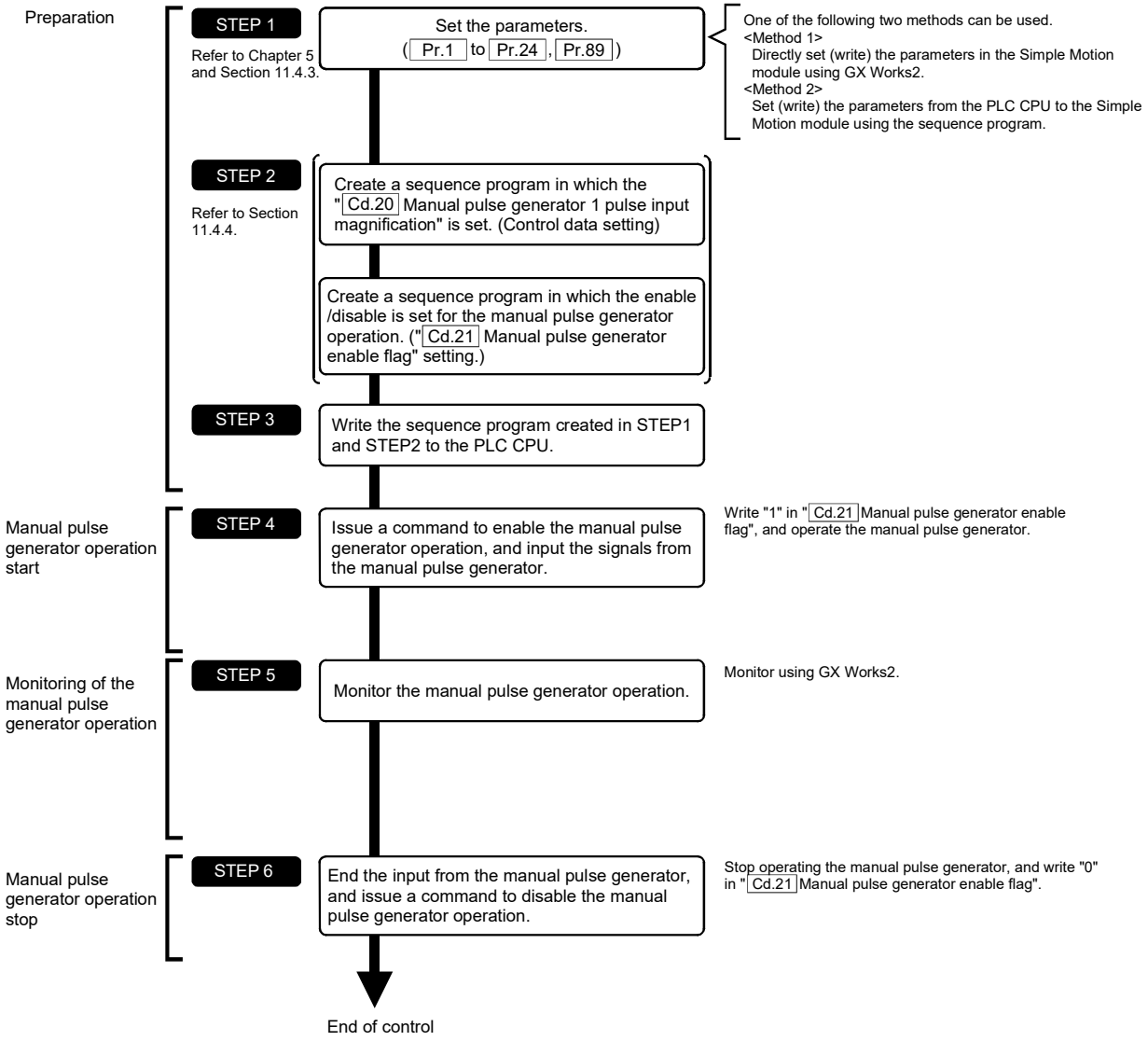

REMARK

- Mechanical elements such as limit switches are considered as already installed.
- Parameter settings work in common for all control using the Simple Motion module.

11.4.3 Setting the required parameters for manual pulse generator operation

The "Positioning parameters" must be set to carry out manual pulse generator operation.
The following table shows the setting items of the required parameters for carrying out manual pulse generator operation. Parameters not shown below are not required to be set for carrying out only manual pulse generator operation. (Set the initial value or a value within the setting range.)

Setting item			Setting requirement	Factory-set initial value (setting details)
Positioning parameters	[Pr.1]	Unit setting	◎	3 (PLS)
	[Pr.2]	Number of pulses per rotation (AP) (Unit: PLS)	◎	20000
	[Pr.3]	Movement amount per rotation (AL) (Unit: PLS)	◎	20000
	[Pr.4]	Unit magnification (AM)	◎	1 (1 times)
	[Pr.8]	Speed limit value (Unit: PLS/s)	◎	200000
	[Pr.11]	Backlash compensation amount (Unit: PLS)	○	0
	[Pr.12]	Software stroke limit upper limit value (Unit: PLS)	○	2147483647
	[Pr.13]	Software stroke limit lower limit value (Unit: PLS)	○	–2147483648
	[Pr.14]	Software stroke limit selection	○	0 (command position value)
	[Pr.15]	Software stroke limit valid/invalid setting	○	0 (valid)
	[Pr.17]	Torque limit setting value (Unit: %)	○	300
	[Pr.22]	Input signal logic selection	○	0 (Manual pulse generator input is negative logic.)
	[Pr.24]	Manual pulse generator/Incremental synchronous encoder input selection	○	0 (4 times multiplication of A-phase/B-phase)
	[Pr.89]	Manual pulse generator/Incremental synchronous encoder input type selection	◎	0 (Differential output type)

◎ : Setting always required.
○ : Set according to requirements (Set the initial value or a value within the setting range when not used.)

REMARK

- Positioning parameter settings work in common for all controls using the Simple Motion module. When carrying out other controls ("major positioning control", "high-level positioning control", "HPR control"), set the respective setting items as well.
- Parameters are set for each axis. But [Pr.22] Manual pulse generator input (b8), [Pr.24], [Pr.89] is set only for axis 1. (The setting for other than axis 1 is ignored.)
- Refer to Chapter 5 "Data Used for Positioning Control" for the setting details.

11.4.4 Creating a program to enable/disable the manual pulse generator operation

A sequence program must be created to execute a manual pulse generator operation. Consider the "required control data setting", "start conditions" and "start time chart" when creating the program.
The following shows an example when a manual pulse generator operation is started for axis 1.

■ Required control data setting

The control data shown below must be set to execute a manual pulse generator operation. The setting is carried out with the sequence program.

Setting item		Setting value	Setting details	Buffer memory address	
				QD77MS2 QD77MS4	QD77MS16
[Cd.20]	Manual pulse generator 1 pulse input magnification	1	Set the manual pulse generator 1 pulse input magnification. (1 to 10000 times)	1522+100n 1523+100n	4322+100n 4323+100n
[Cd.21]	Manual pulse generator enable flag	1 (0)	Set "1: Enable manual pulse generator operation". (Set "0: Disable manual pulse generator operation" when finished with the manual pulse generator operation.)	1524+100n	4324+100n

n: Axis No.-1

*: Refer to Section 5.7 "List of control data" for details on the setting details.

■ Start conditions

The following conditions must be fulfilled when starting. The required conditions must also be assembled in the sequence program, and the sequence program must be configured so the operation will not start if the conditions are not fulfilled.

Signal name		Signal state		Device	
				QD77MS2 QD77MS4	QD77MS16
Interface signal	PLC READY signal	ON	PLC CPU preparation completed	Y0	
	READY signal	ON	QD77MS preparation completed	X0	
	All axis servo ON	ON	All axis servo ON	Y1	
	Synchronization flag *	ON	QD77MS buffer memory The access is possible.	X1	
	Axis stop signal	OFF	Axis stop signal is OFF	Y4 to Y7	[Cd.180] Axis stop
	Start complete signal	OFF	Start complete signal is OFF	X10 to X13	[Md.31] Status: b14
	BUSY signal	OFF	QD77MS is not operating	XC to XF	X10 to X1F
	Error detection signal	OFF	There is no error	X8 to XB	[Md.31] Status: b13
	M code ON signal	OFF	M code ON signal is OFF	X4 to X7	[Md.31] Status: b12
External signal	Forced stop input signal	ON	There is no forced stop input	–	
	Stop signal	OFF	Stop signal is OFF	–	
	Upper limit (FLS)	ON	Within limit range	–	
	Lower limit (RLS)	ON	Within limit range	–	

*: If the PLC CPU is set to the asynchronous mode in the synchronization setting, this must be inserted in the program for interlocking. If it is set to the synchronous mode, it must not be inserted in the program for interlocking because it is turned ON when the PLC CPU executes calculation.

■ Start time chart

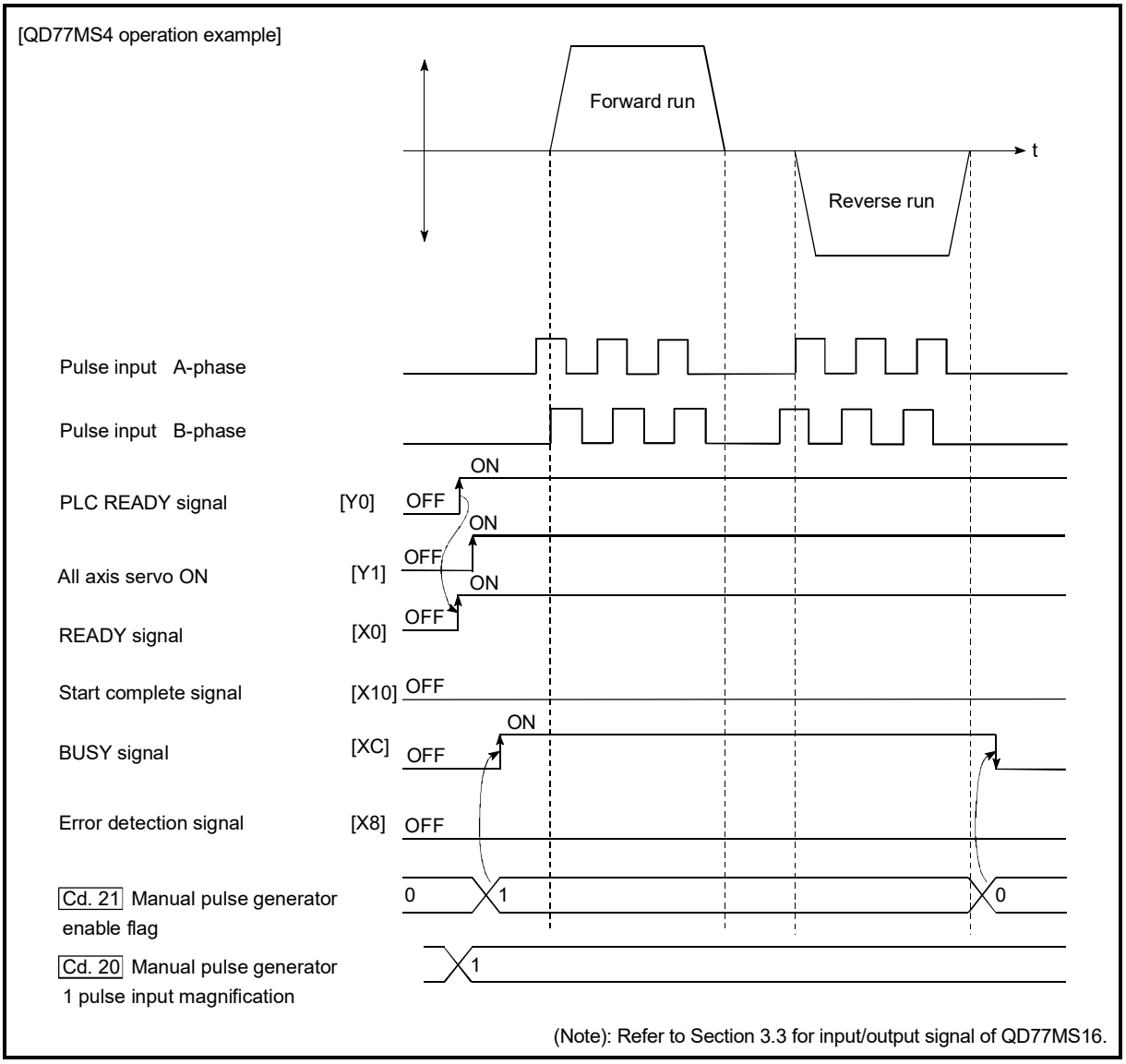

Fig. 11.18 Manual pulse generator operation start time chart

■ Creating the program

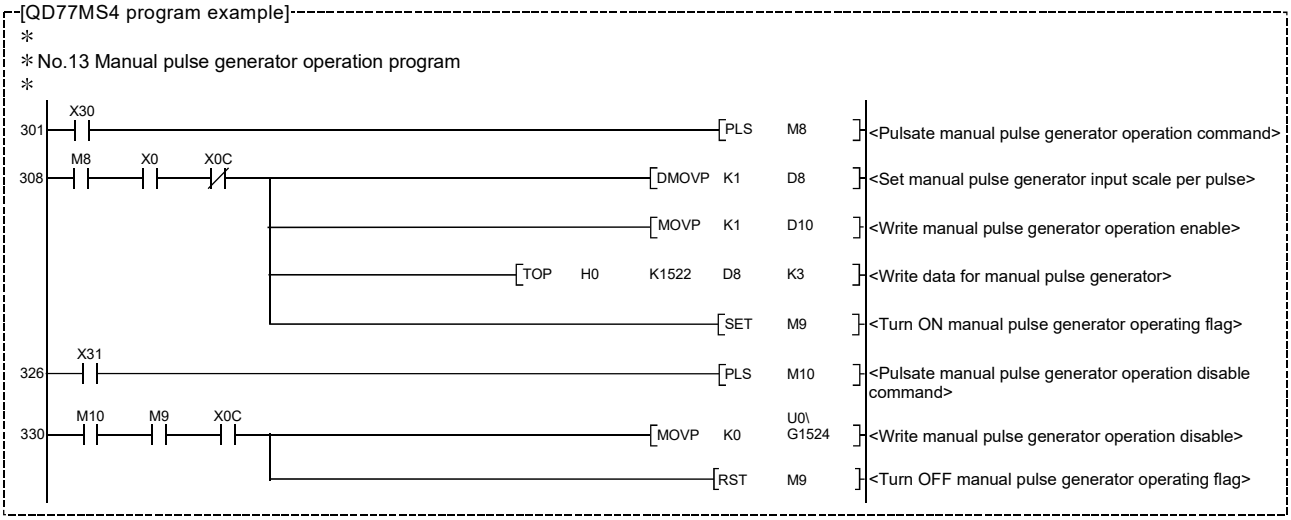

MEMO

Chapter 12 Expansion Control

The details and usage of expansion control are explained in this chapter.

Expansion control includes the speed-torque control to execute the speed control and torque control not including position loop and the synchronous control to synchronize with input axis using software with "synchronous control parameter" instead of controlling mechanically with gear, shaft, speed change gear or cam, etc.

Execute the required settings to match each control.

12.1 Speed-torque control 12- 2
12.1.1 Outline of speed-torque control 12- 2
12.1.2 Setting the required parameters for speed-torque control 12- 4
12.1.3 Setting the required data for speed-torque control 12- 5
12.1.4 Operation of speed-torque control 12- 7
12.2 Synchronous control 12- 33

12.1 Speed-torque control

12.1.1 Outline of speed-torque control

This function is used to execute the speed control or torque control that does not include the position loop for the command to servo amplifier.
"Continuous operation to torque control mode" that switches the control mode to torque control mode without stopping the servomotor during positioning operation is also available for tightening a bottle cap or a screw.
Switch the control mode from "position control mode" to "speed control mode", "torque control mode" or "continuous operation to torque control mode" to execute the "Speed-torque control".

Control mode	Control	Remark
Position control mode	Positioning control, HPR control, JOG operation, Inching operation and Manual pulse generator operation	Control that include the position loop for the command to servo amplifier
Speed control mode	Speed-torque control	Control that does not include the position loop for the command to servo amplifier
Torque control mode		
Continuous operation to torque control mode		Control that does not include the position loop for the command to servo amplifier Control mode can be switched during positioning control or speed control.

Use the servo amplifiers whose software versions are compatible with each control mode to execute the "Speed-torque control".
Servo amplifier software versions that are compatible with each control mode are shown below. For the support information not listed in the table below, refer to the instruction manual or manual of the servo amplifier to be used.

Servo amplifier model	Software version		
	Speed control	Torque control	Continuous operation to torque control ＊1
MR-J4-_B_/ MR-JE-B(F)	—	—	—
MR-J4W_-_B	—	—	—
MR-J4-_B_-RJ	—	—	—
MR-J3-_B_	—	B3 or later	C7 or later
MR-J3W-_B	—	—	Not compatible
MR-J3-_BS_	—	—	C7 or later
MR-J5-_B_	—	—	—
MR-J5W-_B_	—	—	—
MR-J5-_B_-RJ	—	—	—

—: There is no restriction by the version.

*1: The torque generation direction of servomotor can be changed by setting the servo parameter "Function selection C-B POL reflection selection at torque control (PC29)" for the servo amplifier that is compatible with the continuous operation to torque control. (Refer to Section 12.1.4 "Operation of speed-torque control".)
For the servo amplifier that is not compatible with the continuous operation to torque control, the operation is the same as that of when "0: Enabled" is set in servo parameter "Function selection C-B POL reflection selection at torque control (PC29)".
In addition, the virtual servo amplifier is not compatible with the continuous operation to torque control.

⚠CAUTION

- If operation that generates torque more than 100% of the rating is performed with an abnormally high frequency in a servomotor stop status (servo lock status) or in a 30r/min or less low-speed operation status, the servo amplifier may malfunction regardless of the electronic thermal relay protection.

12.1.2 Setting the required parameters for speed-torque control

The "Positioning parameters" must be set to carry out speed-torque control.
The following table shows the setting items of the required parameters for carrying out speed-torque control. Parameters not shown below are not required to be set for carrying out only speed-torque control. (Set the initial value or a value within the setting range.)

Setting item			Setting requirement
Positioning parameters	[Pr.1]	Unit setting	◎
	[Pr.2]	Number of pulses per rotation (AP)	◎
	[Pr.3]	Movement amount per rotation (AL)	◎
	[Pr.4]	Unit magnification (AM)	◎
	[Pr.8]	Speed limit value	◎
	[Pr.12]	Software stroke limit upper limit value	○
	[Pr.13]	Software stroke limit lower limit value	○
	[Pr.14]	Software stroke limit selection	○
	[Pr.22]	Input signal logic selection	◎
	[Pr.82]	Forced stop valid/invalid selection	○
	[Pr.83]	Speed control 10 x multiplier setting for degree axis	○
	[Pr.90]	Operation setting for speed-torque control mode	○

◎ : Setting always required.
○ : Set according to requirements (Set the initial value or a value within the setting range when not used.)

REMARK

- Positioning parameter settings work in common for all controls using the Simple Motion module. When carrying out other controls ("major positioning control", "high-level positioning control", "HPR control"), set the respective setting items as well.
- Parameters are set for each axis.
- Refer to Chapter 5 "Data Used for Positioning Control" for the setting details.

12.1.3 Setting the required data for speed-torque control

■ Required control data setting for the control mode switching

The control data shown below must be set to execute the control mode switching.

Setting item		Setting value	Setting details	Buffer memory address	
				QD77MS2 QD77MS4	QD77MS16
[Cd.138]	Control mode switching request	1	Set "1: Switching request" after setting "[Cd.139] Control mode setting".	1574+100n	4374+100n
[Cd.139]	Control mode setting	→	Set the control mode to switch. 0: Position control mode 10: Speed control mode 20: Torque control mode 30: Continuous operation to torque control mode	1575+100n	4375+100n

n: Axis No.-1

*: Refer to Section 5.7 "List of control data" for the setting details.

When "30: Continuous operation to torque control mode" is set, set the switching condition of the control mode to switch to the continuous operation to torque control mode.
The control data shown below must be set to set the switching condition of control mode.

Setting item		Setting value	Setting details	Buffer memory address	
				QD77MS2 QD77MS4	QD77MS16
[Cd.153]	Control mode auto-shift selection	→	Set the switching condition when switching to continuous operation to torque control mode. 0: No switching condition 1: Command position value pass 2: Actual position value pass	1593+100n	4393+100n
[Cd.154]	Control mode auto-shift parameter	→	Set the condition value when setting the control mode switching condition.	1594+100n 1595+100n	4394+100n 4395+100n

n: Axis No.-1

*: Refer to Section 5.7 "List of control data" for the setting details.

■ Required control data setting for the speed control mode

The control data shown below must be set to execute the speed control.

Setting item		Setting value	Setting details	Buffer memory address	
				QD77MS2 QD77MS4	QD77MS16
[Cd.140]	Command speed at speed control mode	→	Set the command speed at speed control mode.	1576+100n 1577+100n	4376+100n 4377+100n
[Cd.141]	Acceleration time at speed control mode	→	Set the acceleration time at speed control mode.	1578+100n	4378+100n
[Cd.142]	Deceleration time at speed control mode	→	Set the deceleration time at speed control mode.	1579+100n	4379+100n

n: Axis No.-1

*: Refer to Section 5.7 "List of control data" for the setting details.

■ Required control data setting for the torque control mode

The control data shown below must be set to execute the torque control.

Setting item		Setting value	Setting details	Buffer memory address	
				QD77MS2 QD77MS4	QD77MS16
[Cd.143]	Command torque at torque control mode	→	Set the command torque at torque control mode.	1580+100n	4380+100n
[Cd.144]	Torque time constant at torque control mode (Forward direction)	→	Set the time constant at driving during torque control mode.	1581+100n	4381+100n
[Cd.145]	Torque time constant at torque control mode (Negative direction)	→	Set the time constant at regeneration during torque control mode.	1582+100n	4382+100n
[Cd.146]	Speed limit value at torque control mode	→	Set the speed limit value at torque control mode.	1584+100n 1585+100n	4384+100n 4385+100n

n: Axis No.-1

*: Refer to Section 5.7 "List of control data" for the setting details.

■ Required control data setting for the continuous operation to torque control mode

The control data shown below must be set to execute the continuous operation to torque control.

Setting item		Setting value	Setting details	Buffer memory address	
				QD77MS2 QD77MS4	QD77MS16
[Cd.147]	Speed limit value at continuous operation to torque control mode	→	Set the speed limit value at continuous operation to torque control mode.	1586+100n 1587+100n	4386+100n 4387+100n
[Cd.148]	Acceleration time at continuous operation to torque control mode	→	Set the acceleration time at continuous operation to torque control mode.	1588+100n	4388+100n
[Cd.149]	Deceleration time at continuous operation to torque control mode	→	Set the deceleration time at continuous operation to torque control mode.	1589+100n	4389+100n
[Cd.150]	Target torque at continuous operation to torque control mode	→	Set the target torque at continuous operation to torque control mode.	1590+100n	4390+100n
[Cd.151]	Torque time constant at continuous operation to torque control mode (Forward direction)	→	Set the time constant at driving during continuous operation to torque control mode.	1591+100n	4391+100n
[Cd.152]	Torque time constant at continuous operation to torque control mode (Negative direction)	→	Set the time constant at regeneration during continuous operation to torque control mode.	1592+100n	4392+100n

n: Axis No.-1

*: Refer to Section 5.7 "List of control data" for the setting details.

12.1.4 Operation of speed-torque control

[1] Switching of control mode (Speed control/Torque control)

■ Switching method of control mode

To switch the control mode to the speed control or the torque control, set "1" in "[Cd.138] Control mode switching request" after setting the control mode in "[Cd.139] Control mode setting".
When the mode is switched to the speed control mode or the torque control mode, the control data used in each control mode must be set before setting "1" in "[Cd.138] Control mode switching request".
When the switching condition is satisfied at control mode switching request, "30: Control mode switch" is set in "[Md.26] Axis operation status", and the BUSY signal turns ON. "0" is automatically stored in "[Cd.138] Control mode switching request" by Simple Motion module after completion of switching.
A warning "Control mode switching during BUSY" (warning code: 120) or "Control mode switching during zero speed OFF" (warning code: 121) occurs if the switching condition is not satisfied, and the control mode is not switched.
The following shows the switching condition of each control mode.

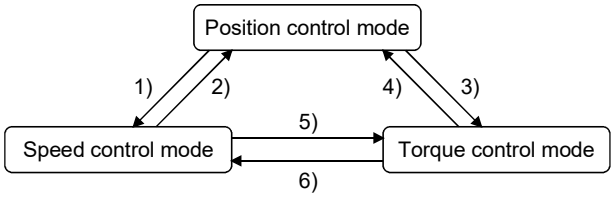

Switching operation		Switching condition
1)	Position control mode → Speed control mode	Not during positioning (Note-1) and during motor stop (Note-2), (Note-3)
2)	Speed control mode → Position control mode	During motor stop (Note-2), (Note-3)
3)	Position control mode → Torque control mode	Not during positioning (Note-1) and during motor stop (Note-2), (Note-3)
4)	Torque control mode → Position control mode	During motor stop (Note-2), (Note-3)
5)	Speed control mode → Torque control mode	None
6)	Torque control mode → Speed control mode	

(Note-1): BUSY signal is OFF.
(Note-2): ZERO speed (Low-order buffer memory address: b3 of "[Md.108] Servo status") is ON.

	Buffer memory address (Low-order)	
	QD77MS2/QD77MS4	QD77MS16
[Md.108] Servo status: b3	876+100n	2476+100n

n: Axis No.-1

(Note-3): Change the setting of "Condition selection at mode switching (b12 to b15)" in "[Pr.90] Operation setting for speed-torque control mode" when switching the control mode without waiting for the servomotor to stop. Note that it may cause vibration or impact at control switching. (Refer to Section 5.2.4 "Detailed parameters 2".)

The history of control mode switching is stored to the start history at request of control mode switching. (Refer to Section 5.6.1 "System monitor data".)
Confirm the control mode with "control mode (high-order buffer memory address: b2, b3)" of "[Md.108] Servo status". (Refer to Section 5.6.2 "Axis monitor data".)

	Buffer memory address (High-order)	
	QD77MS2/QD77MS4	QD77MS16
[Md.108] Servo status: b2, b3	877+100n	2477+100n

n: Axis No.-1

■ Precautions at control mode switching

(1) The start complete signal and the positioning complete signal do not turn ON at control mode switching.
(2) When "30: Control mode switch", "31: Speed control", or "32: Torque control" is set in "[Md.26] Axis operation status", the BUSY signal turns ON.
(3) The motor rotation speed might change momentarily at switching from the speed control mode to the torque control mode. Therefore, it is recommended that the control mode is switched from the speed control to the torque control after the servomotors stop.
(4) Use the continuous operation to torque control mode for the usage such as pressing a workpiece. When executing the continuous operation to torque control in the speed control mode, configure the following setting.
- For MR-J5(W)-B
  Set the servo parameter "Function selection B-1 Model adaptive control selection (PB25.0)" to "2: Disabled (PID control)".
- For MR-J4(W)-B
  Set the servo parameter "Function selection B-1 (PB25)" to "2: Disabled (PID control)".

(5) "In speed control flag" ([Md.31] Status: b0) does not turn ON during the speed control mode in the speed-torque control.

■ Operation for "Position control mode ↔ Speed control mode switching"

When the position control mode is switched to the speed control mode, the command speed immediately after the switching is the speed set in "speed initial value selection (b8 to b11)" of "[Pr.90] Operation setting for speed-torque control mode".

Speed initial value selection ([Pr.90]: b8 to b11)	Command speed to servo amplifier immediately after switching from position control mode to speed control mode
0: Command speed	The speed to servo amplifier immediately after switching is "0".
1: Feedback speed	Motor rotation speed received from servo amplifier at switching.
2: Automatic selection	The command speed is invalid due to the setting of continuous operation to torque control mode. At control mode switching, operation is the same as "0: Command speed".

When the speed control mode is switched to the position control mode, the command position immediately after the switching is the command position value at switching.

The following chart shows the operation timing for axis 1.

[QD77MS4 operation example]

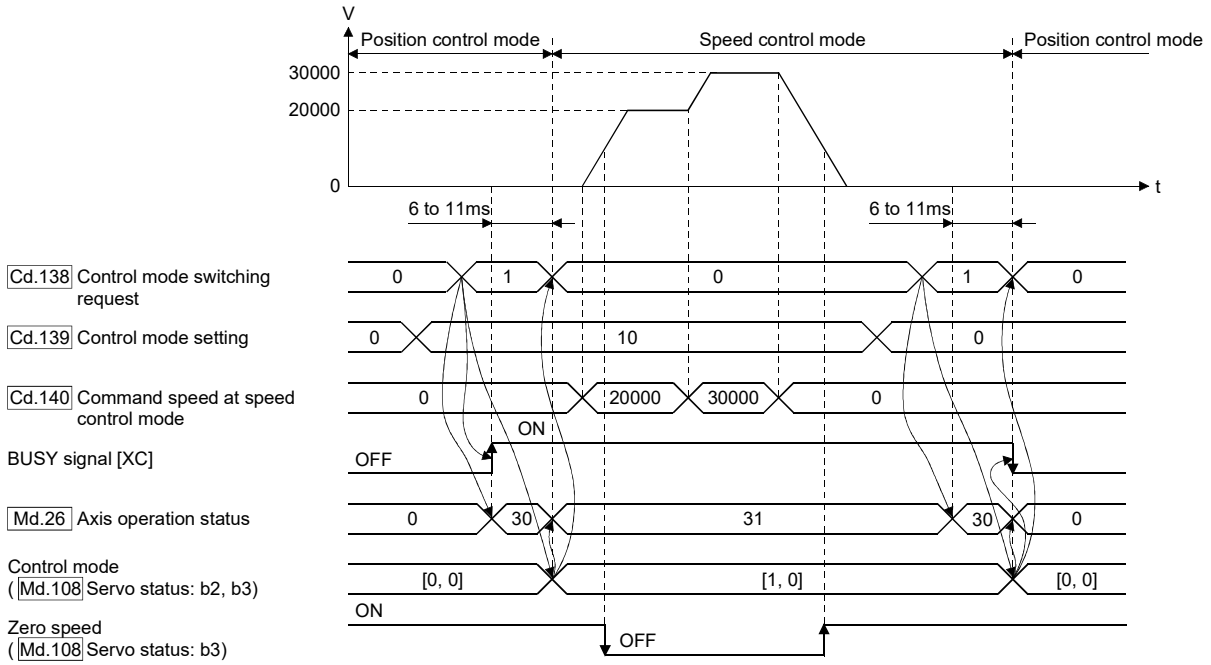

(Note): Refer to Section 3.3 for input/output signal of QD77MS16 and Chapter 5 for buffer memory address.

■ Operation for "Position control mode ↔ Torque control mode switching"

When the position control mode is switched to the torque control mode, the command torque immediately after the switching is the torque set in "Torque initial value selection (b4 to b7)" of "[Pr.90] Operation setting for speed-torque control mode".

Torque initial value selection ([Pr.90]: b4 to b7)	Command torque to servo amplifier immediately after switching from position control mode to torque control mode
0: Command torque	The value of "[Cd.143] Command torque at torque control mode" at switching.
1: Feedback torque	Motor torque value at switching.

POINT

When the servo parameter "Function selection C-B POL reflection selection at torque control (PC29)" is set to "0: Enabled" and "Torque initial value selection" is set to "1: Feedback torque", the warning "Torque initial value selection invalid" (warning code: 521) will occur at control mode switching, and the command value immediately after switching is the same as the case of selecting "0: Command torque". If the feedback torque is selected, set "1: Disabled" in the servo parameter "Function selection C-B POL reflection selection at torque control (PC29)".

When the torque control mode is switched to the position control mode, the command position immediately after the switching is the command position value at switching.

The following chart shows the operation timing for axis 1.

[QD77MS4 operation example]

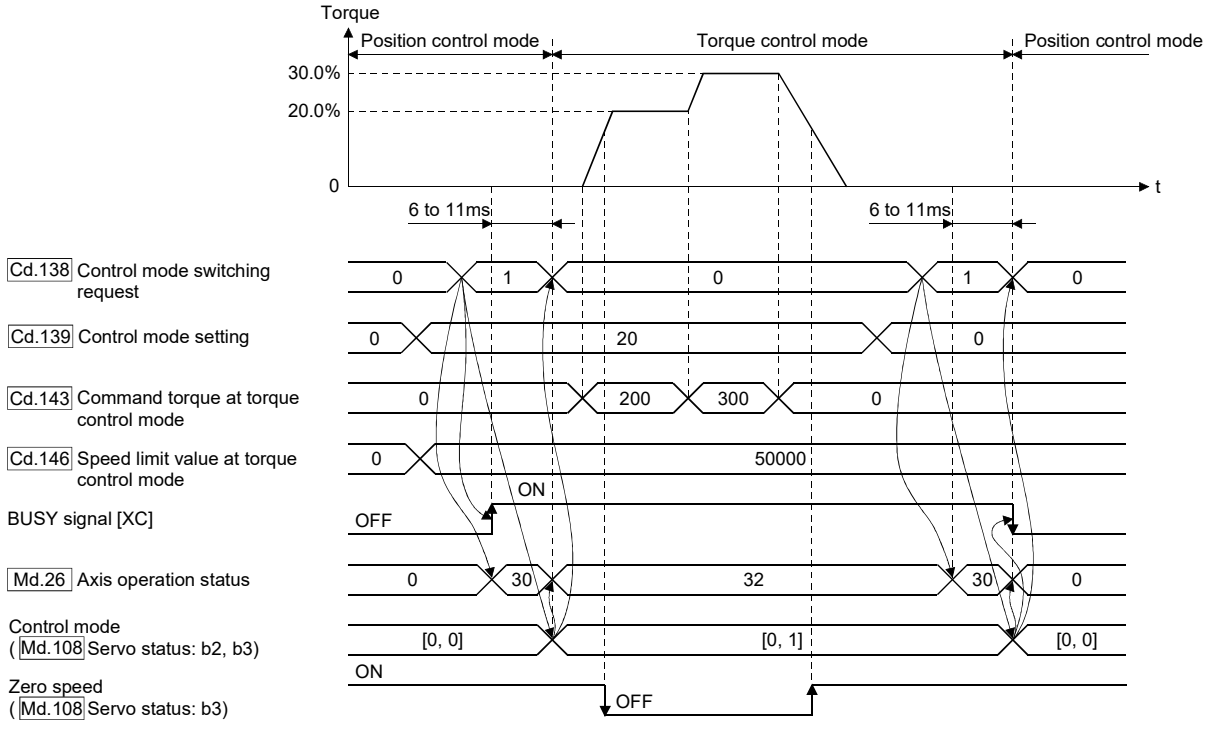

(Note): Refer to Section 3.3 for input/output signal of QD77MS16 and Chapter 5 for buffer memory address.

■ Operation for "Speed control mode ↔ Torque control mode switching"

When the speed control mode is switched to the torque control mode, the command torque immediately after the switching is the torque set in "Torque initial value selection (b4 to b7)" of "[Pr.90] Operation setting for speed-torque control mode".

Torque initial value selection ([Pr.90]: b4 to b7)	Command torque to servo amplifier immediately after switching from speed control mode to torque control mode
0: Command torque	The value of "[Cd.143] Command torque at torque control mode" at switching.
1: Feedback torque	Motor torque value at switching.

POINT

When the servo parameter "Function selection C-B POL reflection selection at torque control (PC29)" is set to "0: Enabled" and "Torque initial value selection" is set to "1: Feedback torque", the warning "Torque initial value selection invalid" (warning code: 521) will occur at control mode switching, and the command value immediately after switching is the same as the case of selecting "0: Command torque". If the feedback torque is selected, set "1: Disabled" in the servo parameter "Function selection C-B POL reflection selection at torque control (PC29)".

When the torque control mode is switched to the speed control mode, the command speed immediately after the switching is the motor rotation speed at switching.

The following chart shows the operation timing for axis 1.

[QD77MS4 operation example]

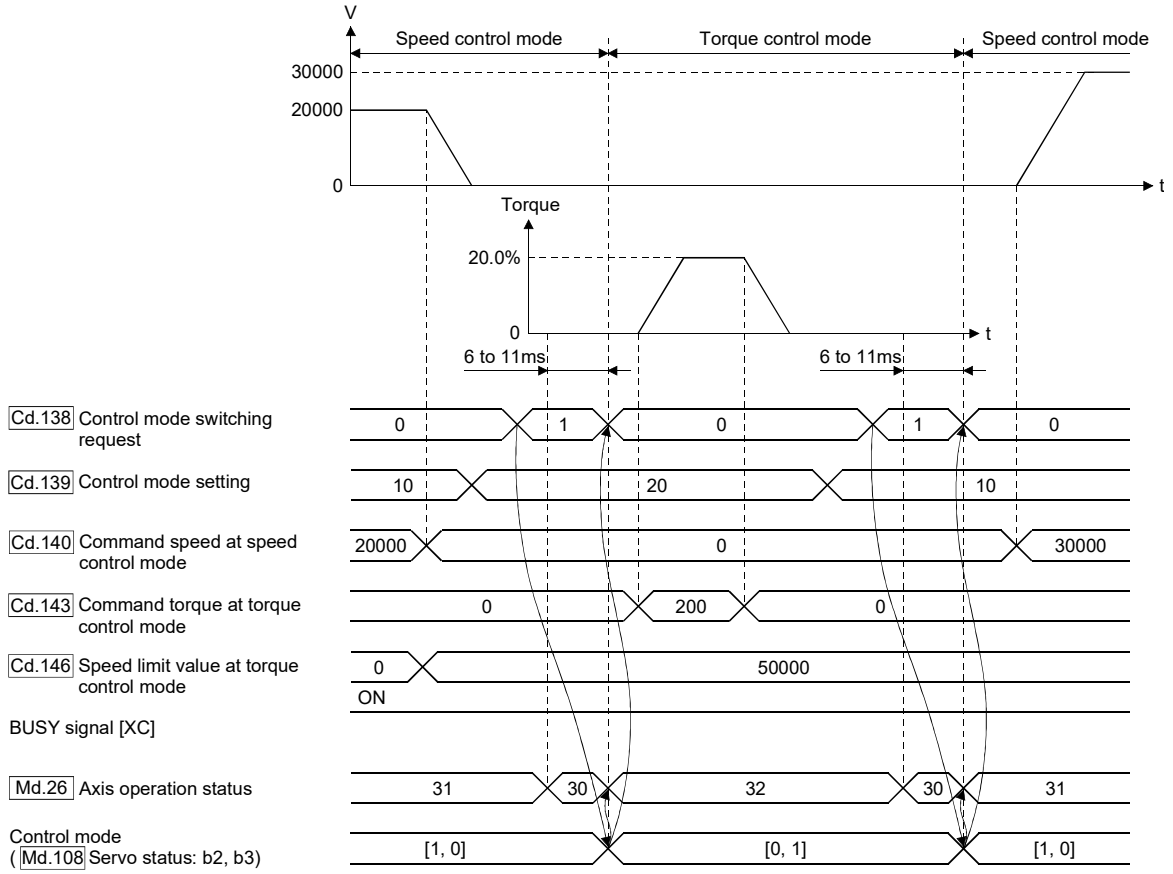

(Note): Refer to Section 3.3 for input/output signal of QD77MS16 and Chapter 5 for buffer memory address.

[2] Switching of control mode (Continuous operation to torque control)

■ Switching method of control mode

To switch the control mode to the continuous operation to torque control mode, set "1" in "[Cd.138] Control mode switching request" after setting the control mode to switch to "[Cd.139] Control mode setting" (30: Continuous operation to torque control mode) from position control mode or speed control mode.
The selected control mode can be checked in "[Md.26] Axis operation status".
When the switching condition is satisfied at control mode switching request, "1: Position control mode - continuous operation to torque control mode, speed control mode - continuous operation to torque control mode switching" is set in "[Md.124] Control mode switching status", and the BUSY signal turns ON.
The following shows the switching condition of the continuous operation to torque control mode.

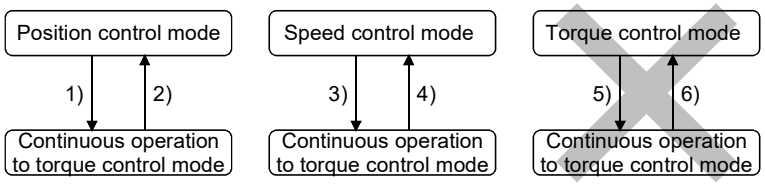

Switching operation		Switching condition
1)	Position control mode → Continuous operation to torque control mode	Not during positioning (Note-1) or during following positioning/synchronous mode • ABS1 : 1-axis linear control (ABS) • INC1 : 1-axis linear control (INC) • FEED1 : 1-axis fixed-feed control • VF1 : 1-axis speed control (Forward) • VR1 : 1-axis speed control (Reverse) • VPF : Speed-position switching control (Forward) • VPR : Speed-position switching control (Reverse) • PVF : Position-speed switching control (Forward) • PVR : Position-speed switching control (Reverse) • Synchronous control
2)	Continuous operation to torque control mode → Position control mode	During motor stop (Note-2)
3)	Speed control mode → Continuous operation to torque control mode	None
4)	Continuous operation to torque control mode → Speed control mode	
5)	Torque control mode → Continuous operation to torque control mode	Switching is impossible.
6)	Continuous operation to torque control mode → Torque control mode	

(Note-1): BUSY signal is OFF.

(Note-2): ZERO speed (Low-order buffer memory address: b3 of "[Md.108] Servo status") is ON. Change the setting of "Condition selection at mode switching (b12 to b15)" in "[Pr.90] Operation setting for speed-torque control mode" when switching the control mode without waiting for the servomotor to stop. Note that it may cause vibration or impact at control switching. (Refer to Section 5.2.4 "Detailed parameters 2".)

	Buffer memory address (Low-order)	
	QD77MS2/QD77MS4	QD77MS16
[Md.108] Servo status: b3	876+100n	2476+100n

n: Axis No.-1

The history of control mode switching is stored to the start history at request of control mode switching. (Refer to Section 5.6.1 "System monitor data".)
Confirm the status of the continuous operation to torque control mode with "b14: Continuous operation to torque control mode" of "[Md.125] Servo status3". When the mode is switched to the continuous operation to torque control mode, the value in "control mode (high-order buffer memory address: b2, b3)" of "[Md.108] Servo status" remains the same as before switching the control mode. (Refer to Section 5.6.2 "Axis monitor data".)

	Buffer memory address (High-order)	
	QD77MS2/QD77MS4	QD77MS16
[Md.108] Servo status: b2, b3	877+100n	2477+100n

n: Axis No.-1

POINTS

(1) When the mode is switched from position control mode to continuous operation to torque control mode, only the switching from continuous operation to torque control mode to position control mode is possible. If the mode is switched to other control modes, the warning "Control mode switching not possible" (warning code: 125) will occur, and the control mode is not switched.

(2) When the mode is switched from speed control mode to continuous operation to torque control mode, only the switching from continuous operation to torque control mode to speed control mode is possible. If the mode is switched to other control modes, the warning "Control mode switching not possible" (warning code: 125) will occur, and the control mode is not switched.

■ Precautions at control mode switching

(1) The start complete signal and positioning complete signal do not turn ON at control mode switching.

(2) When "33: Continuous operation to torque control mode" is set in "[Md.26] Axis operation status" and "1: Position control mode - continuous operation to torque control mode, speed control mode - continuous operation to torque control mode switching" is set in "[Md.124] Control mode switching status", the BUSY signal turns ON.

(3) When using the continuous operation to torque control mode, use the servo amplifiers that are compatible with the continuous operation to torque control. If the servo amplifiers that are not compatible with the continuous operation to torque control are used, the error "Continuous operation to torque control not supported" (error code: 550) occurs at request of switching to continuous operation to torque control mode, and the operation stops. (In the positioning control, the operation stops according to the setting of "[Pr.39] Stop group 3 rapid stop selection". In the speed control, the mode switches to the position control, and the operation immediately stops.)

■ Operation for "Position control mode ↔ Continuous operation to torque control mode switching"

To switch to the continuous operation to torque control mode, set the control data used in the control mode before setting "1" in "[Cd.138] Control mode switching request".
When the switching condition is satisfied at control mode switching request, "1: Position control mode - continuous operation to torque control mode, speed control mode - continuous operation to torque control mode switching" is set in "[Md.124] Control mode switching status" and the BUSY signal turns ON. (When the control mode switching request is executed while the BUSY signal is ON, the BUSY signal does not turn OFF but stays ON at control mode switching.)
"0" is automatically stored in "[Cd.138] Control mode switching request" and "[Md.124] Control mode switching status" after completion of switching.

When the position control mode is switched to the continuous operation to torque control mode, the command torque and command speed immediately after the switching are the values set according to the following setting in "Torque initial value selection (b4 to b7)" and "Speed initial value selection (b8 to b11)" of "[Pr.90] Operation setting for speed-torque control mode".

Torque initial value selection ([Pr.90]: b4 to b7)	Command torque to servo amplifier immediately after switching from position control mode to continuous operation to torque control mode
0: Command torque	The value of "[Cd.150] Target torque at continuous operation to torque control mode" at switching.
1: Feedback torque	Motor torque value at switching.

Speed initial value selection ([Pr.90]: b8 to b11)	Command speed to servo amplifier immediately after switching from position control mode to continuous operation to torque control mode
0: Command speed	Speed that the position command at switching is converted into the motor rotation speed. (When the positioning does not start at switching, the speed to servo amplifier immediately after switching is "0".)
1: Feedback speed	Motor rotation speed received from servo amplifier at switching.
2: Automatic selection	The lower speed between speed that position command at switching is converted into the motor rotation speed and motor rotation speed received from servo amplifier at switching.

POINT

When the mode is switched to continuous operation to torque control mode in cases where command speed and actual speed are different such as during acceleration/deceleration or when the speed does not reach command speed due to torque limit, set "1: Feedback speed" in "Speed initial value selection (b8 to b11)".

The following chart shows the operation timing for axis 1.

[QD77MS4 operation example]

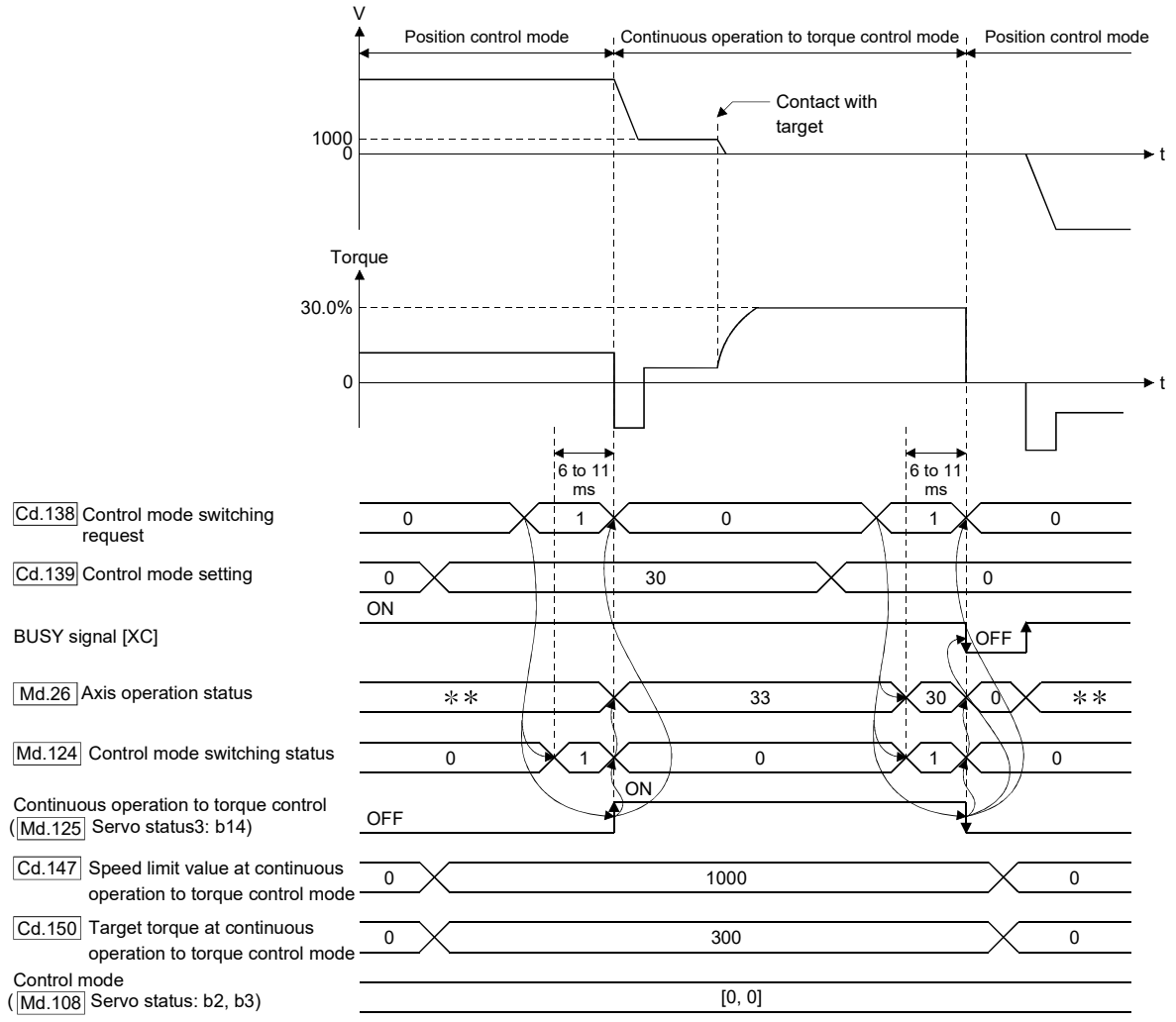

∗∗ : Depending on the positioning method.

(Note): Refer to Section 3.3 for input/output signal of QD77MS16 and Chapter 5 for buffer memory address.

■ Operation for "Speed control mode ↔ Continuous operation to torque control mode switching"

To switch to the continuous operation to torque control mode, set the control data used in the control mode before setting "1" in "[Cd.138] Control mode switching request".
When the switching condition is satisfied at control mode switching request, "1: Position control mode - continuous operation to torque control mode, speed control mode - continuous operation to torque control mode switching" is set in "[Md.124] Control mode switching status" and the BUSY signal turns ON. (When the control mode switching request is executed while the BUSY signal is ON, the BUSY signal does not turn OFF but stays ON at control mode switching.)
"0" is automatically stored in "[Cd.138] Control mode switching request" and "[Md.124] Control mode switching status" after completion of switching.

When the speed control mode is switched to the continuous operation to torque control mode, the command torque and command speed immediately after the switching are the values set in "Torque initial value selection (b4 to b7)" and "Speed initial value selection (b8 to b11)" of "[Pr.90] Operation setting for speed-torque control mode".

Torque initial value selection ([Pr.90]: b4 to b7)	Command torque to servo amplifier immediately after switching from speed control mode to continuous operation to torque control mode
0: Command torque	The value of "[Cd.150] Target torque at continuous operation to torque control mode" at switching.
1: Feedback torque	Motor torque value at switching.

Speed initial value selection ([Pr.90]: b8 to b11)	Command speed to servo amplifier immediately after switching from speed control mode to continuous operation to torque control mode
0: Command speed	The speed commanded to the servo amplifier immediately after switching is the currently commanded speed.
1: Feedback speed	Motor rotation speed received from servo amplifier at switching.
2: Automatic selection	The lower speed between speed that the currently commanded speed at switching is converted into the motor rotation speed and the motor rotation speed received from the servo amplifier.

The following chart shows the operation timing for axis 1.

[QD77MS4 operation example]

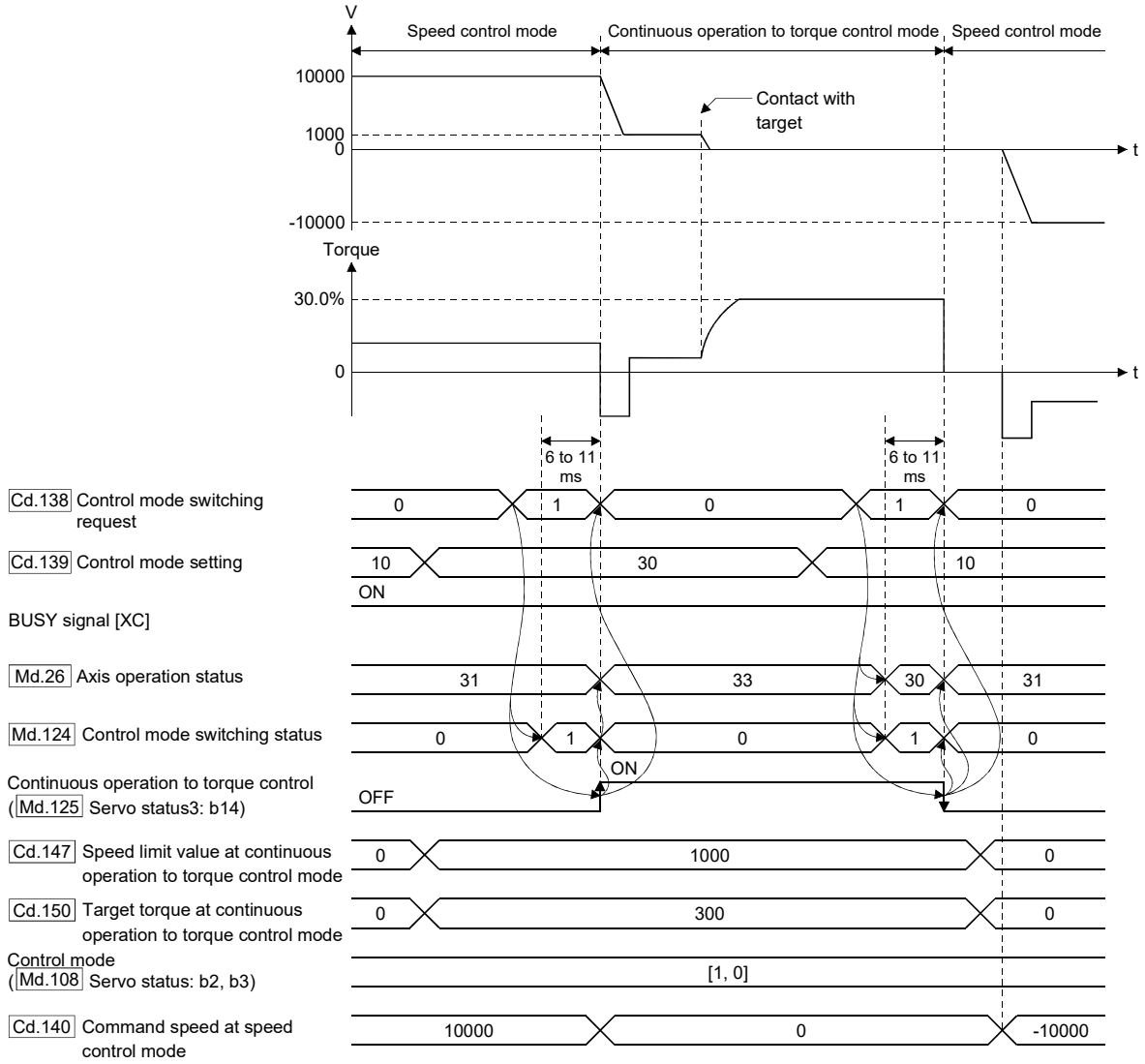

(Note): Refer to Section 3.3 for input/output signal of QD77MS16 and Chapter 5 for buffer memory address.

■ Operation for switching from "Position control mode" to "Continuous operation to torque control mode" automatically

To switch to the continuous operation to torque control mode automatically when the conditions set in "[Cd.153] Control mode auto-shift selection" and "[Cd.154] Control mode auto-shift parameter" are satisfied, set the control data necessary in the continuous operation to torque control mode, "[Cd.153] Control mode auto-shift selection" and "[Cd.154] Control mode auto-shift parameter", and then set "30: Continuous operation to torque control mode" in "[Cd.139] Control mode setting" and "1: Switching request" in "[Cd.138] Control mode switching request". In this case, the current control is continued until the setting condition is satisfied after control mode switching request, and "2: Waiting for the completion of control mode switching condition" is set in "[Md.124] Control mode switching status". When the set condition is satisfied, "1: Position control mode - continuous operation to torque control mode, speed control mode - continuous operation to torque control mode switching" is set in "[Md.124] Control mode switching status". "0" is stored in "[Cd.138] Control mode switching request" and "[Md.124] Control mode switching status" after completion of switching.

If "[Cd.154] Control mode auto-shift parameter" is outside the setting range, the error "Outside control mode auto-shift switching parameter range" (error code: 551) occurs at control mode switching request, and the current processing stops. (In the positioning control, the operation stops according to the setting of "[Pr.39] Stop group 3 rapid stop selection". In the speed control, the mode switches to the position control, and the operation immediately stops.)

POINT

(1) Automatic switching is valid only when the control mode is switched from the position control mode to the continuous operation to torque control mode. When the mode is switched from speed control mode to continuous operation to torque control mode or from continuous operation to torque control mode to other control modes, even if the automatic switching is set, the state is not waiting for the completion of condition, and control mode switching is executed immediately.

(2) When the mode switching request is executed after setting the switching condition, the state of waiting for the completion of control mode switching condition continues until the setting condition is satisfied. Therefore, if the positioning by automatic switching is interrupted, unexpected control mode switching may be executed in other positioning operations. Waiting for the completion of control mode switching condition can be cancelled by setting "Other than 1: Not request" in "[Cd.138] Control mode switching request" or by turning the axis stop signal ON. When an error occurs, waiting for the completion of control mode switching condition is also cancelled. (In both cases, "0" is stored in "[Cd.138] Control mode switching request".

(3) In the state of waiting for the completion of control mode switching condition, if the current values are updated by the current value changing, the fixed-feed control or the speed control (when "2: Clear command position value to zero" is set in "[Pr.21] Command position value during speed control"), an auto-shift judgment is executed based on the updated current value. Therefore, depending on the setting condition, the mode may be switched to the continuous operation to torque control mode immediately after the positioning starts. To avoid this switching, set "1: Switching request" in "[Cd.138] Control mode switching request".

The following chart shows the operation when "1: Command position value pass" is set in "[Cd.153] Control mode auto-shift selection".

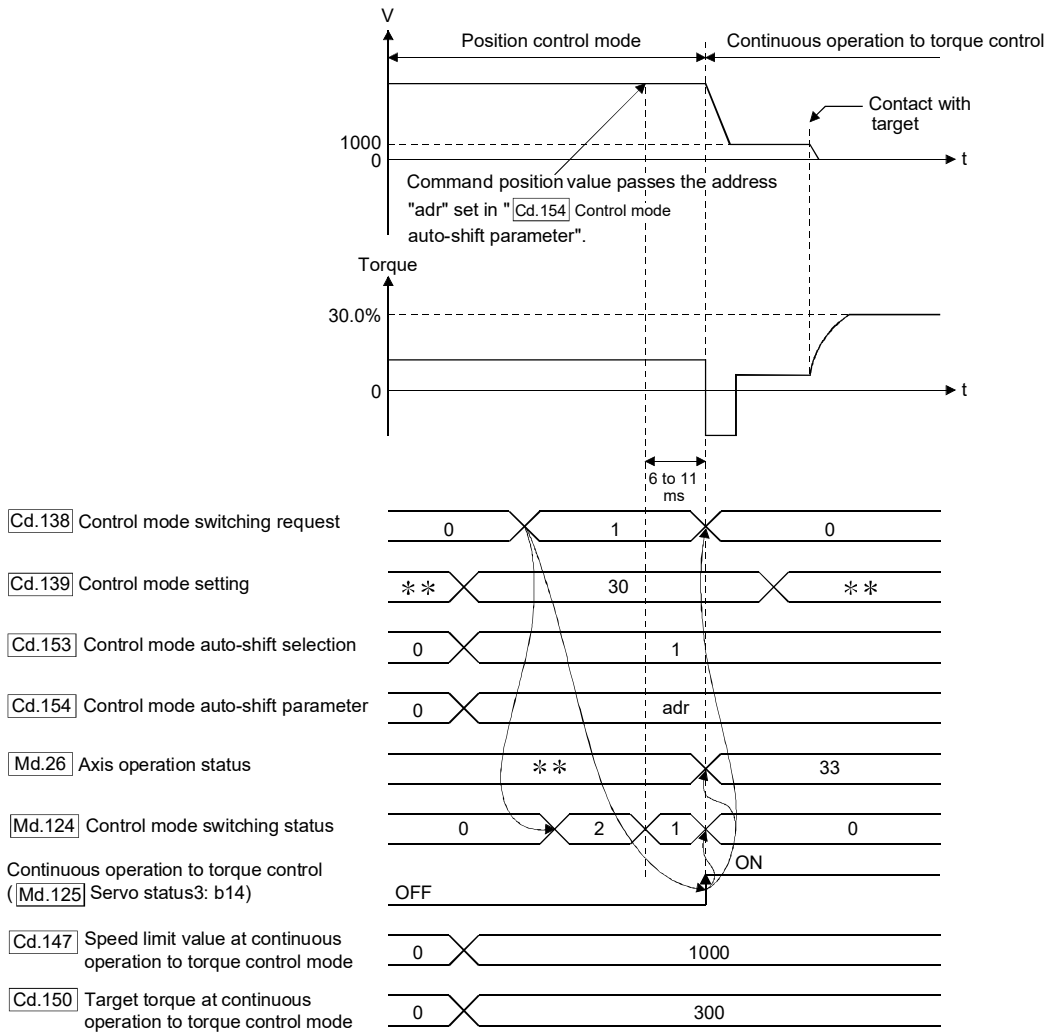

[3] Speed control mode

■ Operation for speed control mode

The speed control is executed at the speed set in "[Cd.140] Command speed at speed control mode" in the speed control mode. Set a positive value for forward rotation and a negative value for reverse rotation. "[Cd.140]" can be changed any time during the speed control mode.
Acceleration/deceleration is performed based on a trapezoidal acceleration/deceleration processing. Set acceleration/deceleration time toward "[Pr.8] Speed limit value" in "[Cd.141] Acceleration time at speed control mode" and "[Cd.142] Deceleration time at speed control mode". The value at speed control mode switching request is valid for "[Cd.141]" and "[Cd.142]".
The command speed during the speed control mode is limited with "[Pr.8] Speed limit value". If the speed exceeding the speed limit value is set, the warning "Speed limit value over" (warning code: 501) occurs, and the operation is controlled with the speed limit value.
Confirm the command speed to servo amplifier with "[Md.122] Speed during command".

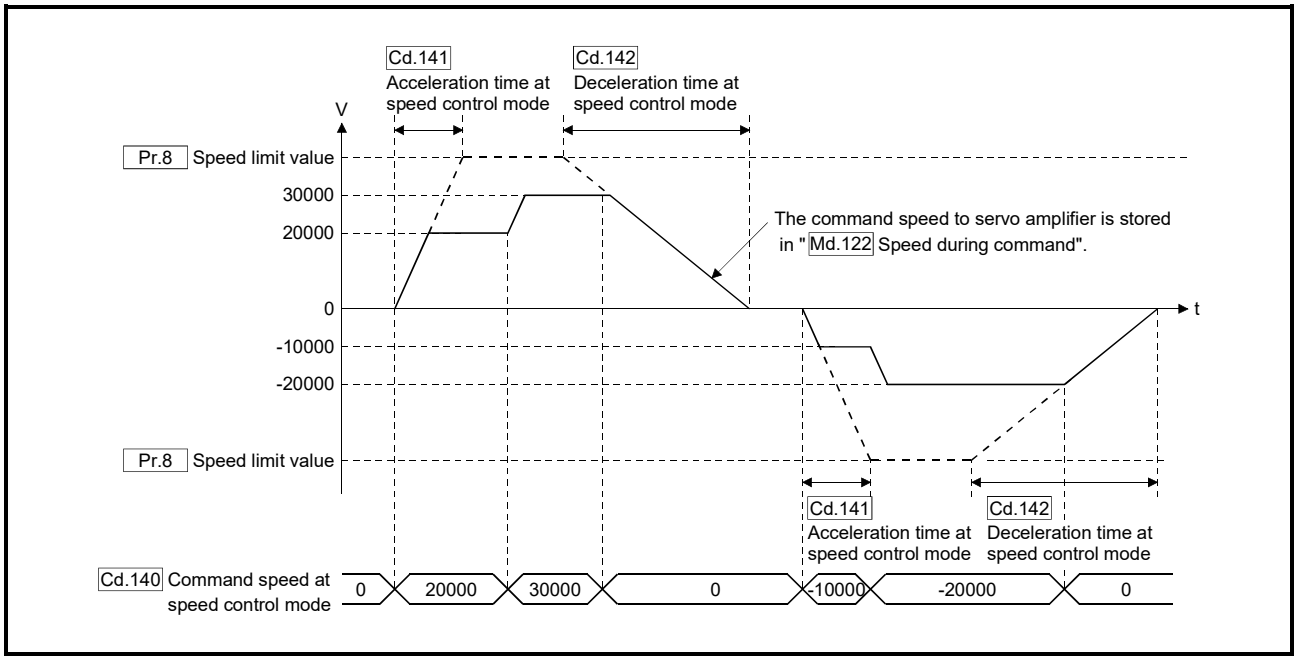

■ Command position value during speed control mode

"[Md.20] Command position value", "[Md.21] Feed machine value" and "[Md.101] Actual position value" are updated even in the speed control mode.
If the command position value exceeds the software stroke limit, the error "Software stroke limit +" (error code: 507) or "Software stroke limit -" (error code: 508) occurs, and the operation switches to the position control mode. Invalidate the software stroke limit to execute one-way feed.

■ Stop cause during speed control mode

The operation for stop cause during speed control mode is shown below.

Item	Operation during speed control mode
Axis stop [Y4 to Y7] turned ON. QD77MS2 QD77MS4	The motor decelerates to speed "0" according to the setting value of "[Cd.142] Deceleration time at speed control mode". The mode switches to the position control mode when "Zero speed" of "[Md.108] Servo status" turns ON, and the operation stops.
"[Cd.180] Axis stop" turned ON. QD77MS16	
Stop signal of "[Cd.44] External input signal operation device" turned ON.	
All axis servo ON [Y1] turned OFF.	The servo OFF is not executed during the speed control mode. The command status when the mode is switched to the position control mode becomes valid.
"[Cd.100] Servo OFF command" turned ON.	
The current value reached the software stroke limit.	An error (error code: 507, 508, 104, 105, or 101) occurs. The mode switches to the position control mode at the current position, and the operation immediately stops. (Deceleration processing is not executed.)
The position of the motor reached the hardware stroke limit.	
PLC READY [Y0] turned OFF.	
The forced stop input to Simple Motion module.	The mode switches to the position control mode when the servo OFF (Servo ON of "[Md.108] Servo status" turns OFF) is executed. (While the servo amplifier is servo OFF, even if the mode is switched to position control mode, the servomotor immediately stops.
The emergency stop input to servo amplifier.	
The servo alarm occurred.	
The servo amplifier's power supply turned OFF.	The motor immediately stops. (The mode is set to the position control mode at the servo amplifier's power supply ON again.)

[4] Torque control mode

■ Operation for torque control mode

The torque control is executed at the command torque set in "[Cd.143] Command torque at torque control mode" in the torque control mode. "[Cd.143] Command torque at torque control mode" can be changed any time during torque control mode. The relation between the setting of command torque and the torque generation direction of servomotor varies depending on the setting of servo parameters "Rotation direction selection/travel direction selection (PA14)" and "Function selection C-B POL reflection selection at torque control (PC29)".

(1) When servo parameter "Function selection C-B POL reflection selection at torque control (PC29)" is set to "0: Enabled"

"Rotation direction selection/travel direction selection (PA14)"	"[Cd.143] Command torque at torque control mode"	Torque generation direction of servo motor	
0: Forward rotation (CCW) with the increase of the positioning address	Positive value (Forward direction)	CCW direction	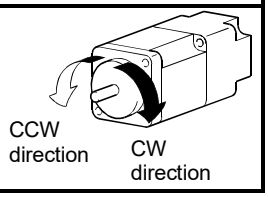
	Negative value (Reverse direction)	CW direction	
1: Reverse rotation (CW) with the increase of the positioning address	Positive value (Forward direction)	CW direction	
	Negative value (Reverse direction)	CCW direction	

(2) When servo parameter "Function selection C-B POL reflection selection at torque control (PC29)" is set to "1: Disabled"

"Rotation direction selection/travel direction selection (PA14)"	"[Cd.143] Command torque at torque control mode"	Torque generation direction of servo motor	
0: Forward rotation (CCW) with the increase of the positioning address	Positive value (Forward direction)	CCW direction	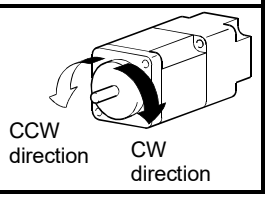
	Negative value (Reverse direction)	CW direction	
1: Reverse rotation (CW) with the increase of the positioning address	Positive value (Forward direction)	CCW direction	
	Negative value (Reverse direction)	CW direction	

Set time for the command torque to increase from 0% to "[Pr.17] Torque limit setting value" in "[Cd.144] Torque time constant at torque control mode (Forward direction)" and for the command torque to decrease from "[Pr.17] Torque limit setting value" to 0% in "[Cd.145] Torque time constant at torque control mode (Negative direction)". The value at torque control mode switching request is valid for "[Cd.144]" and "[Cd.145]".
The command torque during the torque control mode is limited with "[Pr.17] Torque limit setting value". If the torque exceeding the torque limit setting value is set, the warning "Torque limit value over" (warning code: 520) occurs, and the operation is controlled with the torque limit setting value.
Confirm the command torque to servo amplifier with "[Md.123] Torque during command".

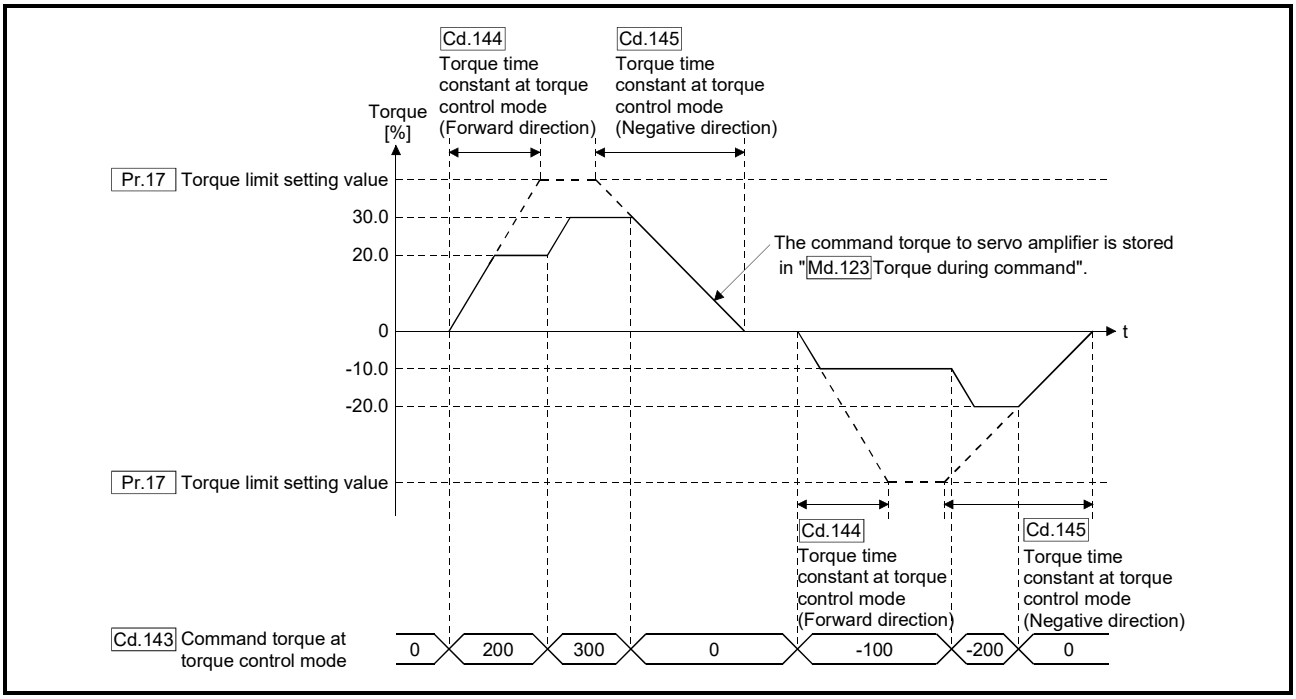

■ Speed during torque control mode

The speed during the torque control mode is controlled with "[Cd.146] Speed limit value at torque control mode". At this time, "Speed limit" ("[Md.108] Servo status" (low-order buffer memory address): b4) turns ON.

	Buffer memory address (Low-order)	
	QD77MS2/QD77MS4	QD77MS16
[Md.108] Servo status: b4	876+100n	2476+100n

n: Axis No.-1

"[Cd.146] Speed limit value at torque control mode" is set to a positive value regardless of the rotation direction. (Controlled by the same value for forward and reverse directions.)
In addition, "[Cd.146] Speed limit value at torque control mode" is limited with "[Pr.8] Speed limit value". If the speed exceeding the speed limit value is set, the warning "Speed limit value over" (warning code: 501) occurs, and the operation is controlled with the speed limit value.
The acceleration/deceleration processing is invalid for "[Cd.146] Speed limit value at torque control mode".

POINT

The actual motor speed may not reach the speed limit value depending on the machine load situation during the torque control.

■ Command position value during torque control mode

"[Md.20] Command position value", "[Md.21] Feed machine value" and "[Md.101] Actual position value" are updated even in the torque control mode. If the command position value exceeds the software stroke limit, the error "Software stroke limit +" (error code: 507) or "Software stroke limit -" (error code: 508) occurs, and the operation switches to the position control mode. Invalidate the software stroke limit to execute one-way feed.

■ Stop cause during torque control mode

The operation for stop cause during torque control mode is shown below.

Item	Operation during torque control mode
Axis stop [Y4 to Y7] turned ON. QD77MS2 QD77MS4	The speed limit value commanded to servo amplifier is "0" regardless of the setting value of "[Cd.146] Speed limit value at torque control mode". The mode switches to the position control mode when "Zero speed" of "[Md.108] Servo status" turns ON, and the operation immediately stops. (Deceleration processing is not executed.) The value of command torque is not changed. It might take time to reach the speed "0" depending on the current torque command value.
"[Cd.180] Axis stop" turned ON. QD77MS16	
Stop signal of "[Cd.44] External input signal operation device" turned ON.	
All axis servo ON [Y1] turned OFF.	The servo OFF is not executed during the torque control mode. The command status when the mode is switched to the position control mode becomes valid.
"[Cd.100] Servo OFF command" turned ON.	
The current value reached the software stroke limit.	An error (error code: 507, 508, 104, 105, or 101) occurs. The mode switches to the position control mode at the current position, and the operation immediately stops. (Deceleration processing is not executed.)
The position of the motor reached the hardware stroke limit.	
PLC READY [Y0] turned OFF.	
The forced stop input to Simple Motion module.	The mode switches to the position control mode when the servo OFF (Servo ON of "[Md.108] Servo status" turns OFF) is executed. (While the servo amplifier is servo OFF, even if the mode is switched to position control mode, the servomotor immediately stops.
The emergency stop input to servo amplifier.	
The servo alarm occurred.	
The servo amplifier's power supply turned OFF.	The motor immediately stops. (The mode is set to the position control mode at the servo amplifier's power supply ON again.)

[5] Continuous operation to torque control mode

■ Operation for continuous operation to torque control mode

In continuous operation to torque control, the torque control can be executed without stopping the operation during the positioning in position control mode or speed command in speed control mode.
During the continuous operation to torque control mode, the torque control is executed at the command torque set in "[Cd.150] Target torque at continuous operation to torque control mode" while executing acceleration/deceleration to reach the speed set in "[Cd.147] Speed limit value at continuous operation to torque control mode".
"[Cd.147] Speed limit value at continuous operation to torque control mode" and "[Cd.150] Target torque at continuous operation to torque control mode" can be changed any time during the continuous operation to torque control mode. The relation between the setting value of command torque and the torque generation direction of servomotor is fixed regardless of the setting of servo parameters "Rotation direction selection/travel direction selection (PA14)" and "Function selection C-B POL reflection selection at torque control (PC29)".

"Rotation direction selection/travel direction selection (PA14)"	"[Cd.150] Target torque at continuous operation to torque control mode"	Torque generation direction of servo motor	
0: Forward rotation (CCW) with the increase of the positioning address	Positive value (Forward direction)	CCW direction	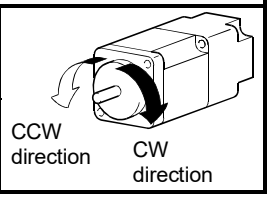
	Negative value (Reverse direction)	CW direction	
1: Reverse rotation (CW) with the increase of the positioning address	Positive value (Forward direction)	CCW direction	
	Negative value (Reverse direction)	CW direction	

Important

Regardless of the setting in "Rotation direction selection/travel direction selection (PA14)", set a positive value when torque command is in CCW direction of servomotor and a negative value when torque command is in CW direction of servomotor in "[Cd.150] Target torque at continuous operation to torque control mode".
If the setting is incorrect, the motor may rotate in an opposite direction.

POINTS

(1) The motor rotates in a direction according to the setting in "[Cd.150] Target torque at continuous operation to torque control mode". Set the value corresponding to the motor rotation direction in "[Cd.147] Speed limit value at continuous operation to torque control mode".

(2) Speed is not limited for reverse torque generation direction.

■ Torque command setting method

During the continuous operation to torque control mode, set time for the command torque to increase from 0% to "[Pr.17] Torque limit setting value" in "[Cd.151] Torque time constant at continuous operation to torque control mode (Forward direction)" and for the command torque to decrease from "[Pr.17] Torque limit setting value" to 0% in "[Cd.152] Torque time constant at continuous operation to torque control mode (Negative direction)". The value at continuous operation to torque control mode switching request is valid for "[Cd.151]" and "[Cd.152]". The command torque during the continuous operation to torque control mode is limited with "[Pr.17] Torque limit setting value".

If torque exceeding the torque limit setting value is commanded, the warning "Torque limit value over" (warning code: 520) occurs, and the operation is controlled with the torque limit setting value.
Confirm the command torque to servo amplifier with "[Md.123] Torque during command".
During the continuous operation to torque control mode, "Torque limit" ("[Md.108] Servo status" (high-order buffer memory address): b13) does not turn ON. Confirm the current torque value in "[Md.104] Motor current value".

	Buffer memory address (High-order)	
	QD77MS2/QD77MS4	QD77MS16
[Md.108] Servo status: b13	877+100n	2477+100n

n: Axis No.-1

■ Speed limit value setting method

Acceleration/deceleration is performed based on a trapezoidal acceleration/deceleration processing. Set acceleration/deceleration time toward "[Pr.8] Speed limit value" in "[Cd.148] Acceleration time at continuous operation to torque control mode" and "[Cd.149] Deceleration time at continuous operation to torque control mode". The value at continuous operation to torque control mode switching is valid for "[Cd.148]" and "[Cd.149]".
"[Cd.147] Speed limit value at continuous operation to torque control mode" is limited with "[Pr.8] Speed limit value". If the speed exceeding the speed limit value is commanded, the warning "Speed limit value over" (warning code: 501) occurs, and the operation is controlled with the speed limit value.
Confirm the command speed to servo amplifier with "[Md.122] Speed during command".

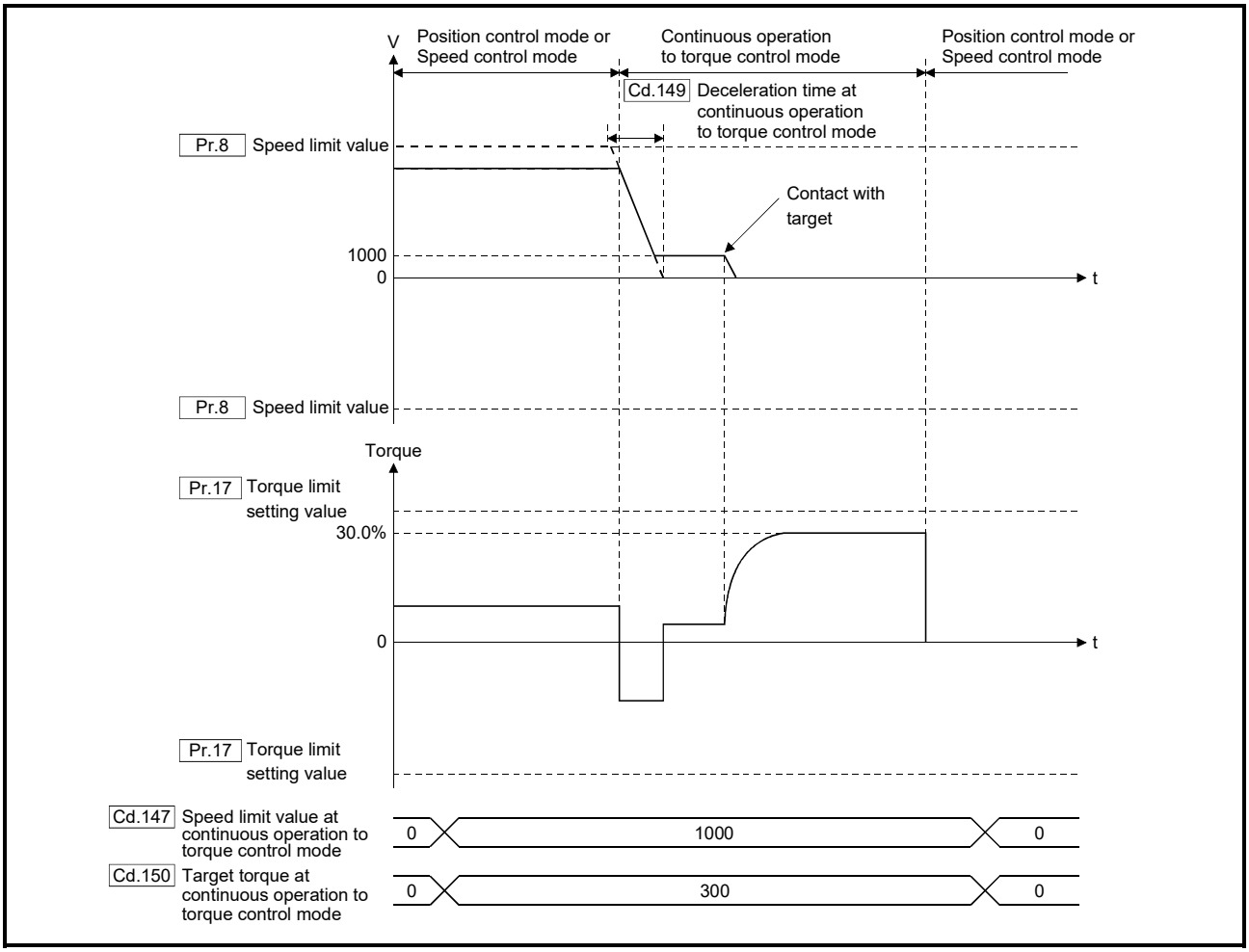

■ Precautions at continuous operation to torque control mode

Refer to the manual of the connected driver for the functions of the servo amplifier not available during the continuous operation to torque control mode.

POINT

If vibration occurs during the continuous operation to torque control, lower the value of the servo parameter "Torque feedback loop gain (PB03)" and check if the issue has been solved.

Important

Configure the system so that there is no limit to the operation range during the continuous operation to torque control mode since the stroke limit signal of the servo amplifier cannot be used during the continuous operation to torque control mode.
When limitation to the command position is required, use the software stroke limit function of the Simple Motion module.

■ Speed during continuous operation to torque control mode

The speed during the continuous operation to torque control mode is controlled with an absolute value of the value set in "[Cd.147] Speed limit value at continuous operation to torque control mode" as command speed. When the speed reaches the absolute value of "[Cd.147] Speed limit value at continuous operation to torque control mode", "Speed limit" ("[Md.108] Servo status" (low-order buffer memory address): b4) turns ON.

	Buffer memory address (Low-order)	
	QD77MS2/QD77MS4	QD77MS16
[Md.108] Servo status: b4	876+100n	2476+100n

n: Axis No.-1

In addition, "[Cd.147] Speed limit value at continuous operation to torque control mode" is limited with "[Pr.8] Speed limit value". If the command speed exceeding the speed limit value is set, a warning "Speed limit value over" (warning code: 501) occurs, and the operation is controlled with the speed limit value.

POINT

The actual motor speed may not reach the command speed depending on the machine load situation during the continuous operation to torque control mode.

■ Command position value during continuous operation to torque control mode

"[Md.20] Command position value", "[Md.21] Feed machine value" and "[Md.101] Actual position value" are updated even in the continuous operation to torque control mode. If the command position value exceeds the software stroke limit, the error "Software stroke limit +" (error code: 507) or "Software stroke limit -" (error code: 508) occurs, and the operation switches to the position control mode. Invalidate the software stroke limit to execute one-way feed.

■ Stop cause during continuous operation to torque control mode

The operation for stop cause during continuous operation to torque control mode is shown below.

<table>
<tr><th>Item</th><th>Operation during continuous operation to torque control mode</th></tr>
<tr><td>Axis stop [Y4 to Y7] turned ON.
QD77MS2 QD77MS4</td><td rowspan="3">The speed limit value commanded to servo amplifier is "0" regardless of the setting value of "[Cd.147] Speed limit value at continuous operation to torque control mode". The mode switches to the position control mode when "Zero speed" of "[Md.108] Servo status" turns ON, and the operation immediately stops. (Deceleration processing is not executed.)
The value of command torque is not changed. It might take time to reach the speed "0" depending on the current torque command value.</td></tr>
<tr><td>"[Cd.180] Axis stop" turned ON.
QD77MS16</td></tr>
<tr><td>Stop signal of "[Cd.44] External input signal operation device" turned ON.</td></tr>
<tr><td>All axis servo ON [Y1] turned OFF.</td><td rowspan="2">The servo OFF is not executed during the continuous operation to torque control mode. The command status when the mode is switched to the position control mode becomes valid.</td></tr>
<tr><td>"[Cd.100] Servo OFF command" turned ON.</td></tr>
<tr><td>The current value reached the software stroke limit.</td><td rowspan="3">An error (error code: 507, 508, 104, 105, or 101) occurs. The mode switches to the position control mode at the current position, and the operation immediately stops. (Deceleration processing is not executed.) *1
When the operation immediately stops, the motor may start hunting depending on the motor speed. Therefore, be sure not to reach the limit in high speed and not to turn OFF the PLC READY.</td></tr>
<tr><td>The position of the motor reached the hardware stroke limit.</td></tr>
<tr><td>PLC READY [Y0] turned OFF.</td></tr>
<tr><td>The forced stop input to Simple Motion module.</td><td rowspan="3">The mode switches to the position control mode when the servo OFF (Servo ON of "[Md.108] Servo status" turns OFF) is executed. *1
(While the servo amplifier is servo OFF, even if the mode is switched to position control mode, the servomotor immediately stops.</td></tr>
<tr><td>The emergency stop input to servo amplifier.</td></tr>
<tr><td>The servo alarm occurred.</td></tr>
<tr><td>The servo amplifier's power supply turned OFF.</td><td>The motor immediately stops. (The mode is set to the position control mode at the servo amplifier's power supply ON again.)</td></tr>
</table>

*1: When the mode has switched from the speed control mode to the continuous operation to torque control mode, the mode switches to the position control mode after switching the speed control mode once. Therefore, it takes the following time to switch to the position control mode.
Switching time for the speed control mode + Switching time for the position control mode.

12.2 Synchronous control

"Synchronous control" can be achieved using software instead of controlling mechanically with gear, shaft, speed change gear or cam, etc.
"Synchronous control" synchronizes movement with the input axis (servo input axis, command generation axis, or synchronous encoder axis), by setting "the parameters for synchronous control" and starting synchronous control on each output axis.
Refer to "MELSEC-Q/L QD77MS/QD77GF/LD77MS/LD77MH Simple Motion Module User's Manual (Synchronous Control)" for details of synchronous control.

MEMO

Chapter 13 Control Sub Functions

The details and usage of the "sub functions" added and used in combination with the main functions are explained in this chapter.

A variety of sub functions are available, including functions specifically for machine HPR and generally related functions such as control compensation, etc.
More appropriate, finer control can be carried out by using these sub functions.
Each sub function is used together with a main function by creating matching parameter settings and sequence programs. Read the execution procedures and settings for each sub function, and set as required.

13.1 Outline of sub functions 13- 2
13.1.1 Outline of sub functions 13- 2
13.2 Sub functions specifically for machine HPR 13- 4
13.2.1 HPR retry function 13- 4
13.2.2 HP shift function 13- 8
13.3 Functions for compensating the control 13- 11
13.3.1 Backlash compensation function 13- 11
13.3.2 Electronic gear function 13- 13
13.3.3 Near pass function 13- 22
13.4 Functions to limit the control 13- 24
13.4.1 Speed limit function 13- 24
13.4.2 Torque limit function 13- 26
13.4.3 Software stroke limit function 13- 30
13.4.4 Hardware stroke limit function 13- 37
13.4.5 Forced stop function 13- 41
13.5 Functions to change the control details 13- 44
13.5.1 Speed change function 13- 44
13.5.2 Override function 13- 51
13.5.3 Acceleration/deceleration time change function 13- 54
13.5.4 Torque change function 13- 59
13.5.5 Target position change function 13- 63
13.6 Absolute position system 13- 67
13.7 Other functions 13- 69
13.7.1 Step function 13- 69
13.7.2 Skip function 13- 74
13.7.3 M code output function 13- 78
13.7.4 Teaching function 13- 82
13.7.5 Command in-position function 13- 88
13.7.6 Acceleration/deceleration processing function 13- 91
13.7.7 Pre-reading start function 13- 94
13.7.8 Deceleration start flag function 13- 97
13.7.9 Stop command processing for deceleration stop function 13- 100
13.7.10 Speed control 10 x multiplier setting for degree axis function 13- 103
13.7.11 Operation setting for incompletion of HPR function 13- 106
13.8 Servo ON/OFF 13- 108
13.8.1 Servo ON/OFF 13- 108
13.8.2 Follow up function 13- 110

13.1 Outline of sub functions

"Sub functions" are functions that compensate, limit, add functions, etc., to the control when the main functions are executed. These sub functions are executed by parameter settings, operation from GX Works2, sub function sequence programs, etc.

13.1.1 Outline of sub functions

The following table shows the types of sub functions available.

Sub function		Details
Functions characteristic to machine HPR	HPR retry function	This function retries the HPR with the upper/lower limit switches during machine HPR. This allows machine HPR to be carried out even if the axis is not returned to before the proximity dog with JOG operation, etc.
	HP shift function	After returning to the machine HP, this function compensates the position by the designated distance from the machine HP and sets that position as the HP address.
Functions that compensate control	Backlash compensation function	This function compensates the mechanical backlash. Feed command equivalent to the set backlash amount are output each time the movement direction changes.
	Electronic gear function	By setting the movement amount per pulse, this function can freely change the machine movement amount per commanded pulse. When the movement amount per pulse is set, a flexible positioning system that matches the machine system can be structured.
	Near pass function ＊1	This function suppresses the machine vibration when the positioning data is switched during continuous path control in the interpolation control.
Functions that limit control	Speed limit function	If the command speed exceeds "[Pr.8] Speed limit value" during control, this function limits the commanded speed to within the "[Pr.8] Speed limit value" setting range.
	Torque limit function	If the torque generated by the servomotor exceeds "[Pr.17] Torque limit setting value" during control, this function limits the generated torque to within the "[Pr.17] Torque limit setting value" setting range.
	Software stroke limit function	If a command outside of the upper/lower limit stroke limit setting range, set in the parameters, is issued, this function will not execute positioning for that command.
	Hardware stroke limit function	This function carries out deceleration stop with the hardware stroke limit switch.
	Forced stop function	This function stops all axes of the servo amplifier with the forced stop signal.
Functions that change control details	Speed change function	This function changes the speed during positioning. Set the changed speed in the speed change buffer memory ([Cd.14] New speed value), and change the speed with the speed change request ([Cd.15] Speed change request).
	Override function	This function changes the speed within a percentage of 1 to 300% during positioning. This is executed using "[Cd.13] Positioning operation speed override".
	Acceleration/deceleration time change function	This function changes the acceleration/deceleration time during speed change. (Functions added to the speed change function and override function.)
	Torque change function	This function changes the "torque limit value" during control.
	Target position change function	This function changes the target position during the execution of positioning. At the same time, this also can change the speed.

＊1: The near pass function is featured as standard and is valid only for setting continuous path control for position control. It cannot be set to be invalid with parameters.

Sub function		Details
Absolute position system function		This function restores the absolute position of designated axis. By this function, the HPR after power ON from OFF is not required once the HPR is executed when the system operation is started.
Other functions	Step function	This function temporarily stops the operation to confirm the positioning operation during debugging, etc. The operation can be stopped at each "automatic deceleration" or "positioning data".
	Skip function	This function stops the positioning being executed (decelerates to a stop) when the skip signal is input, and carries out the next positioning.
	M code output function	This function issues a command for a sub work (clamp or drill stop, tool change, etc.) according to the code No. (0 to 65535) that can be set for each positioning data.
	Teaching function	This function stores the address positioned with manual control into the positioning address ([Da.6] Positioning address/movement amount) having the designated positioning data No.
	Command in-position function	At each automatic deceleration, this function calculates the remaining distance for the Simple Motion module to reach the positioning stop position, and when the value is less than the set value, sets the "command in-position flag". When using another sub work before ending the control, use this function as a trigger for the sub work.
	Acceleration/deceleration processing function	This function adjusts the control acceleration/deceleration.
	Pre-reading start function	This function shortens the virtual start time.
	Deceleration start flag function	Function that turns ON the flag when the constant speed status or acceleration status switches to the deceleration status during position control, whose operation pattern is "Positioning complete", to make the stop timing known.
	Stop command processing for deceleration stop function	Function that selects a deceleration curve when a stop cause occurs during deceleration stop processing to speed 0.
	Speed control 10 x multiplier setting for degree axis function	This function is executed the positioning control by the 10 x speed of the command speed and the speed limit value when the setting unit is "degree".
	Operation setting for incompletion of HPR function	This function is provided to select whether positioning control is operated or not, when HPR request flag is ON.
Servo ON/OFF	Servo ON/OFF	This function executes servo ON/OFF of the servo amplifiers connected to the Simple Motion module.
	Follow up function	This function monitors the motor rotation amount with the servo turned OFF, and reflects it on the command position value.

13.2 Sub functions specifically for machine HPR

The sub functions specifically for machine HPR include the "HPR retry function" and "HP shift function". Each function is executed by parameter setting.

13.2.1 HPR retry function

When the workpiece goes past the HP without stopping during positioning control, it may not move back in the direction of the HP although a machine HPR is commanded, depending on the workpiece position. This normally means the workpiece has to be moved to a position before the proximity dog by a JOG operation, etc., to start the machine HPR again. However, by using the HPR retry function, a machine HPR can be carried out regardless of the workpiece position.

The details shown below explain about the "HPR retry function".

[1] Control details
[2] Precautions during control
[3] Setting the HPR retry function

[1] Control details

The following drawing shows the operation of the HPR retry function.

(1) HPR retry point return retry operation when the workpiece is within the range between the upper and lower limits.

1) The movement starts in the "[Pr.44] HPR direction" by a machine HPR start.
2) The operation decelerates when the limit signal OFF is detected.
3) After stopping due to the limit signal OFF detection, the operation moves at the "[Pr.46] HPR speed" in the opposite direction of the "[Pr.44] HPR direction".
4) The operation decelerates when the proximity dog turns OFF.
5) After stopping due to the proximity dog OFF, a machine HPR is carried out in the "[Pr.44] HPR direction". (Depending on the HPR method, the zero point of the encoder must be passed at least once.)
6) Machine HPR completion.

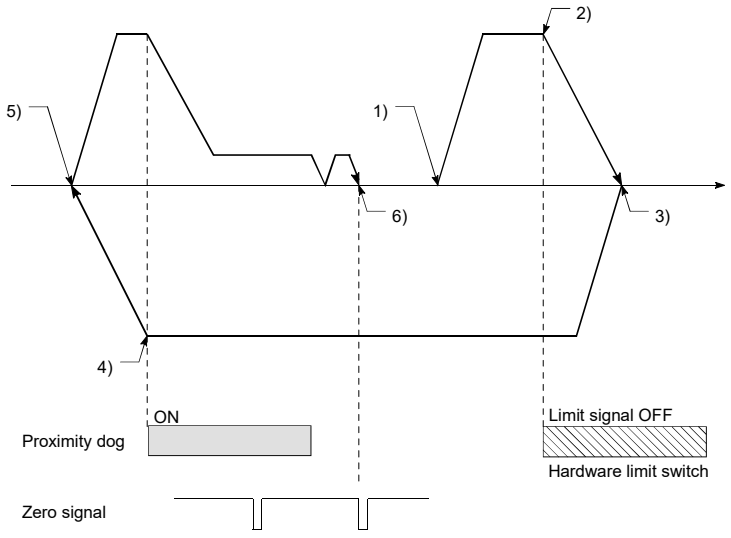

Fig. 13.1 HPR retry operation by limit signal detection

(2) HPR retry operation when the workpiece is outside the range between the upper and lower limits.

1) When the direction from the workpiece to the HP is the same as the "[Pr.44] HPR direction", a normal machine HPR is carried out.

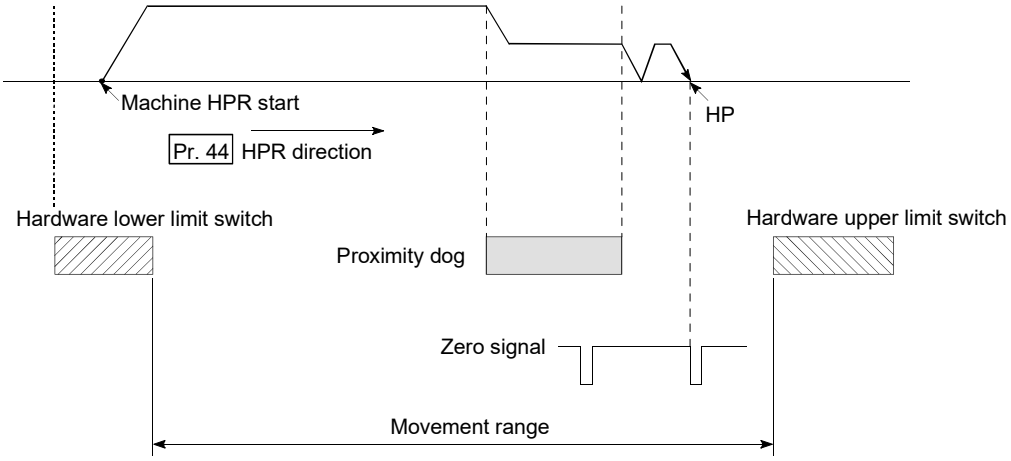

2) When the direction from the workpiece to the HP is the opposite direction from the "[Pr.44] HPR direction", the operation carries out a deceleration stop when the proximity dog turns OFF, and then carries out a machine HPR in the direction set in "[Pr.44] HPR direction".

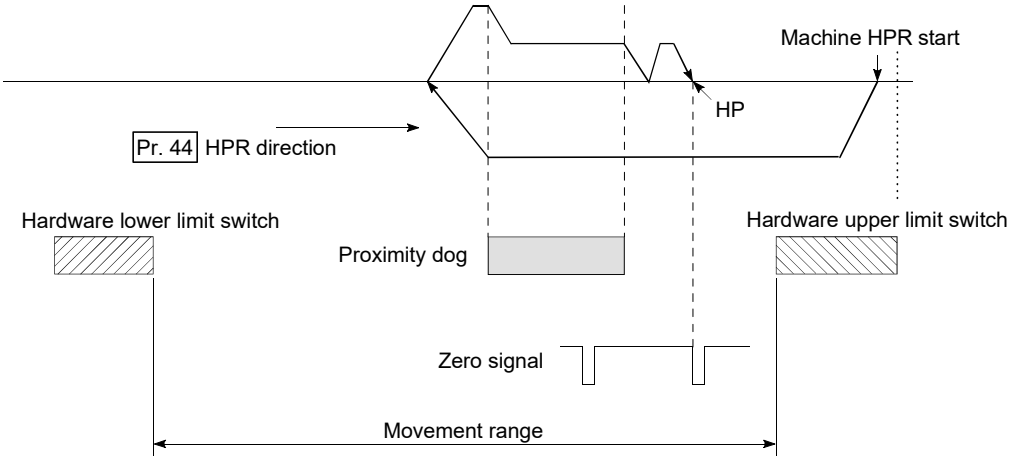

✻ In the above example 1) and 2), "0: Positive direction" is set in "[Pr.44] HPR direction"

REMARK

- When the "0: Positive direction" is selected in "[Pr.44] HPR direction", the upper limit switch is set to the limit switch in the HPR direction.
- When the "1: Negative direction" is selected in "[Pr.44] HPR direction", the lower limit switch is set to the limit switch in the HPR direction.
- If inverting the install positions of upper/lower limit switches, hardware stroke limit function cannot be operated properly.
  If any problem is found for HPR operation, review "Rotation direction selection/travel direction selection (PA14)" and the wiring for the upper/lower limit switch.

Fig. 13.2 HPR retry operation from on limit (limit signal OFF)

(3) Setting the dwell time during an HPR retry
The HPR retry function can perform such function as the dwell time using "[Pr.57] Dwell time during HPR retry" when the reverse run operation is carried out due to detection by the limit signal for upper and lower limits and when the machine HPR is executed after the proximity dog is turned OFF to stop the operation.

"[Pr.57] Dwell time during HPR retry" is validated when the operation stops at the "A" and "B" positions in the following drawing. (The dwell time is the same value at both positions "A" and "B".)

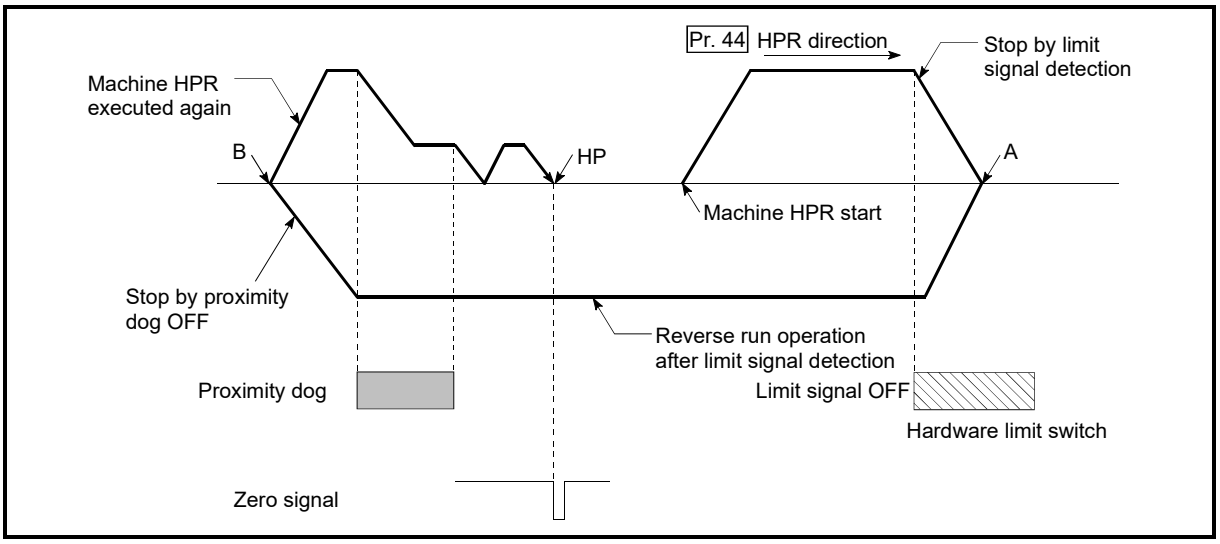

Fig. 13.3 Setting the dwell time during an HPR retry

[2] Precaution during control

(1) The following table shows whether the HPR retry function may be executed by the "[Pr.43] HPR method".

[Pr.43] HPR method	Execution status of HPR retry function
Proximity dog method	○: Execution possible
Count method 1)	○: Execution possible
Count method 2)	○: Execution possible
Data set method	—
Scale origin signal detection method	×: Execution not possible
Driver HPR method	—

(2) Always establish upper/lower limit switches at the upper/lower limit positions of the machine. If the HPR retry function is used without hardware stroke limit switches, the motor will continue rotation until a hardware stroke limit signal is detected.

(3) Do not configure a system so that the servo amplifier power turns OFF by the upper/lower limit switches. If the servo amplifier power is turned OFF, the HPR retry cannot be carried out.

(4) The operation decelerates upon detection of the hardware limit signal, and the movement starts in the opposite direction. In this case, however, the error "Hardware stroke limit (+)" (error code: 104) or "Hardware stroke limit (–)" (error code: 105) does not occur.

POINT

The settings of the upper/lower stroke limit signal are shown below. The HPR retry function can be used with either setting. (Refer to Section 13.4.4 "Hardware stroke limit function".)

- External input signal of QD77MS
- External input signal of servo amplifier
- External input signal via CPU (buffer memory of QD77MS)

[3] Setting the HPR retry function

To use the "HPR retry function", set the required details in the parameters shown in the following table, and write them to the Simple Motion module.
When the parameters are set, the HPR retry function will be added to the machine HPR control. The set details are validated at the rising edge (OFF → ON) of the PLC READY signal [Y0]. Set "[Pr.57] Dwell time during HPR retry" according to the user's requirements.

Setting item		Setting value	Setting details	Factory-set initial value
[Pr.48]	HPR retry	1	Set "1: Carry out HPR retry by limit switch".	0
[Pr.57]	Dwell time during HPR retry	→	Set the deceleration stop time during HPR retry. (Random value between 0 and 65535 (ms))	0

*: Refer to Section 5.2 "List of parameters" for setting details.

REMARK

- Parameters are set for each axis.
- It is recommended that the parameters be set whenever possible with GX Works2. Execution by sequence program uses many sequence programs and devices. The execution becomes complicated, and the scan times will increase.

13.2.2 HP shift function

When a machine HPR is carried out, the HP is normally established using the proximity dog or zero signal. However, by using the HP shift function, the machine can be moved a designated movement amount from the position where the zero signal was detected. A mechanically established HP can then be interpreted at that point.

The details shown below explain about the "HP shift function".

[1] Control details
[2] Setting range for the HP shift amount
[3] Movement speed during HP shift
[4] Precautions during control
[5] Setting the HP shift function

[1] Control details

The following drawing shows the operation of the HP shift function.

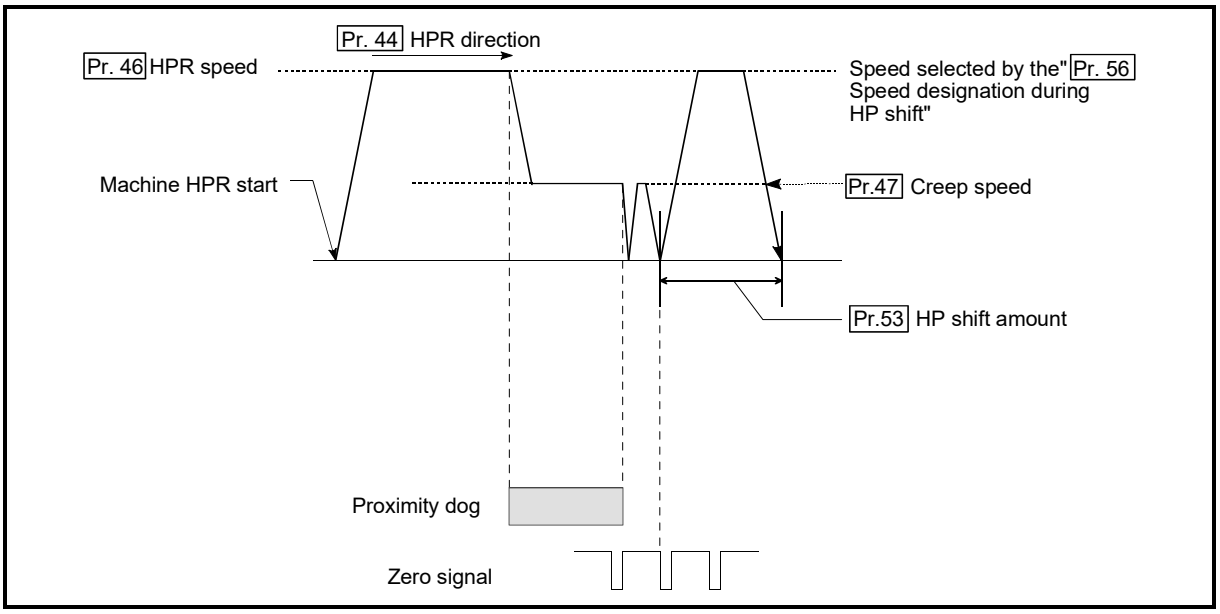

Fig. 13.4 HP shift operation

[2] Setting range for the HP shift amount

Set the HP shift amount within the range from the detected zero signal to the upper/lower limit switches.

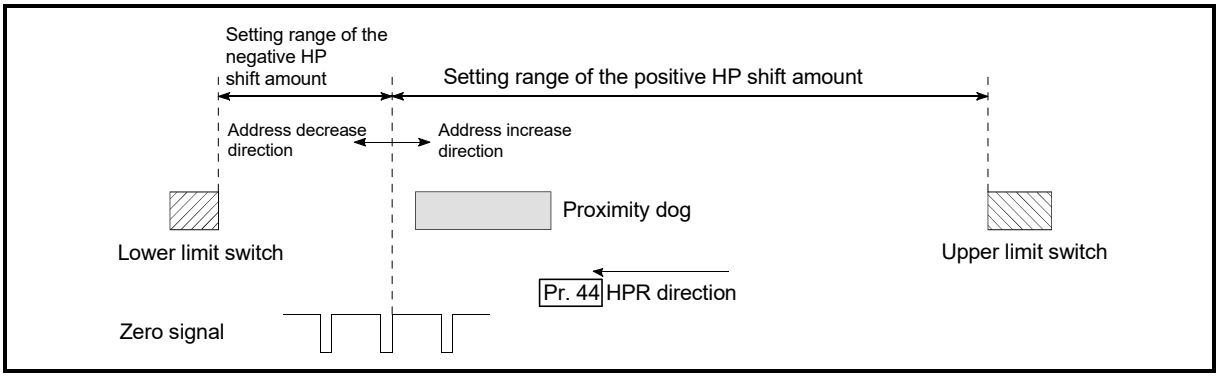

Fig. 13.5 Setting range for the HP shift amount

[3] Movement speed during HP shift

When using the HP shift function, the movement speed during the HP shift is set in "[Pr.56] Speed designation during HP shift". The movement speed during the HP shift is selected from either the "[Pr.46] HPR speed" or the "[Pr.47] Creep speed". For the acceleration/deceleration time, the value specified in "[Pr.51] HPR acceleration time selection" or "[Pr.52] HPR deceleration time selection" is used.

The following drawings show the movement speed during the HP shift when a mechanical HPR is carried out by the proximity dog method.

(1) HP shift operation at the "[Pr.46] HPR speed"
(When "[Pr.56] Speed designation during HP shift" is 0)

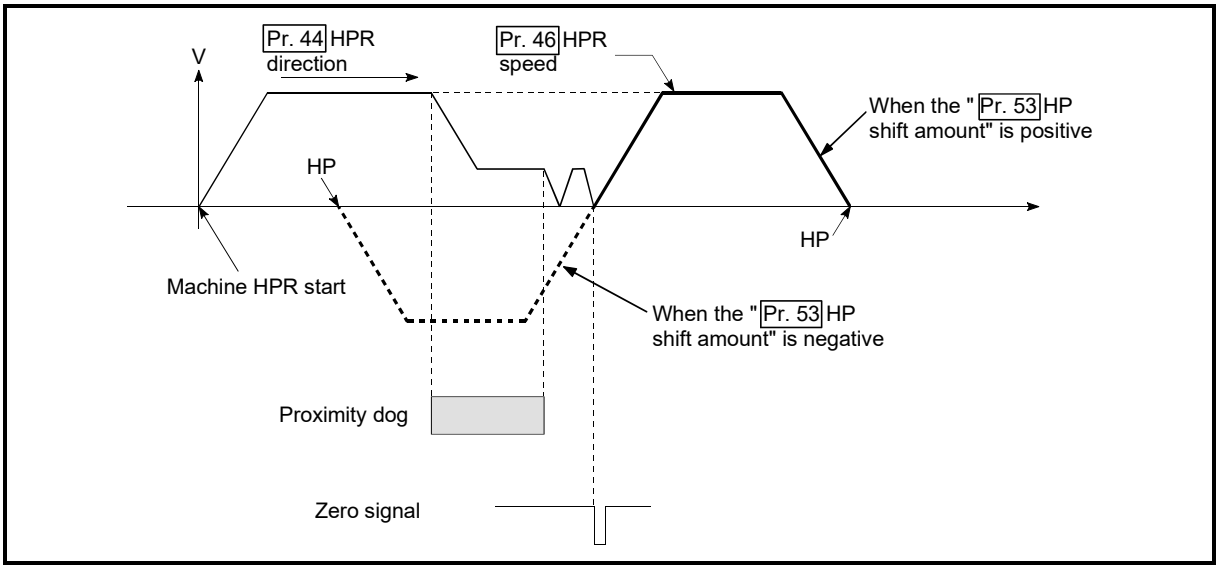

Fig. 13.6 HP shift operation at the HPR speed

(2) HP shift operation at the "[Pr.47] Creep speed"
(When "[Pr.56] Speed designation during HP shift" is 1)

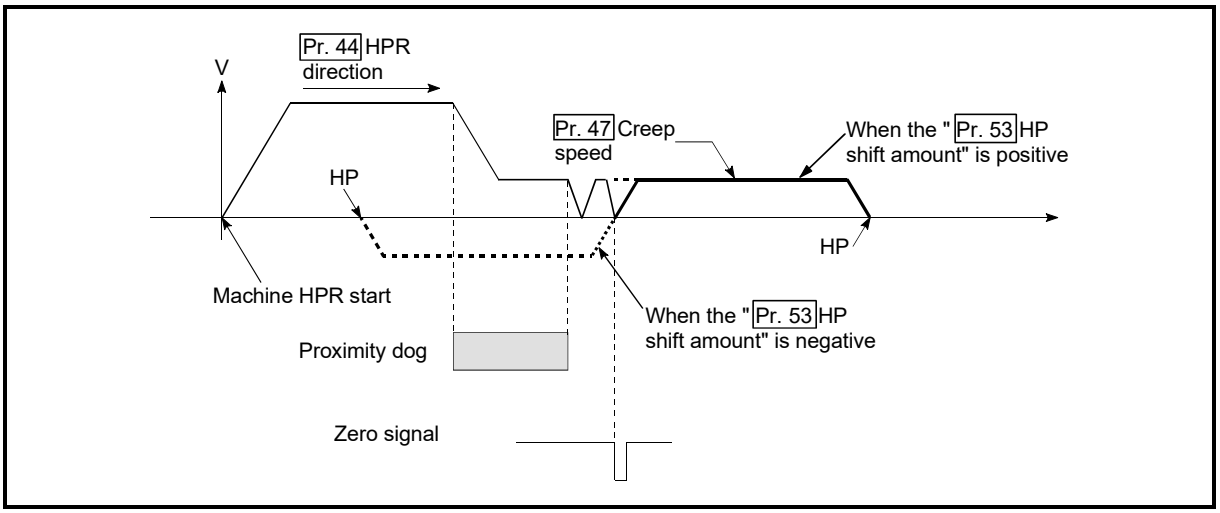

Fig. 13.7 HP shift operation at the creep speed

[4] Precautions during control

(1) The following data are set after the HP shift amount is complete.
- HPR complete flag ([Md.31] Status: b4)
- [Md.20] Command position value
- [Md.21] Feed machine value
- [Md.26] Axis operation status

HPR request flag ([Md.31] Status: b3) is reset after completion of the HP shift.

(2) "[Pr.53] HP shift amount" is not added to "[Md.34] Movement amount after proximity dog ON". The movement amount immediately before the HP shift operation, considering proximity dog ON as "0", is stored.

[5] Setting the HP shift function

To use the "HP shift function", set the required details in the parameters shown in the following table, and write them to the Simple Motion module.
When the parameters are set, the HP shift function will be added to the machine HPR control. The set details are validated at the rising edge (OFF → ON) of the PLC READY signal [Y0].

Setting item		Setting value	Setting details	Factory-set initial value
[Pr.53]	HP shift amount	→	Set the shift amount during the HP shift.	0
[Pr.56]	Speed designation during HP shift	→	Select the speed during the HP shift 0: [Pr.46] HPR speed 1: [Pr.47] Creep speed	0

*: Refer to Section 5.2 "List of parameters" for setting details.

REMARK

- Parameters are set for each axis.
- It is recommended that the parameters be set whenever possible with GX Works2. Execution by sequence program uses many sequence programs and devices. The execution becomes complicated, and the scan times will increase.

13.3 Functions for compensating the control

The sub functions for compensating the control include the "backlash compensation function", "electronic gear function", and "near pass function". Each function is executed by parameter setting or sequence program creation and writing.

13.3.1 Backlash compensation function

The "backlash compensation function" compensates the backlash amount in the mechanical system.

The details shown below explain about the "backlash compensation function".

[1] Control details
[2] Precautions during control
[3] Setting the backlash compensation function

[1] Control details

When the backlash compensation amount is set, an extra amount of command equivalent to the set backlash amount is output every time the movement direction changes.
The following drawing shows the operation of the backlash compensation function.

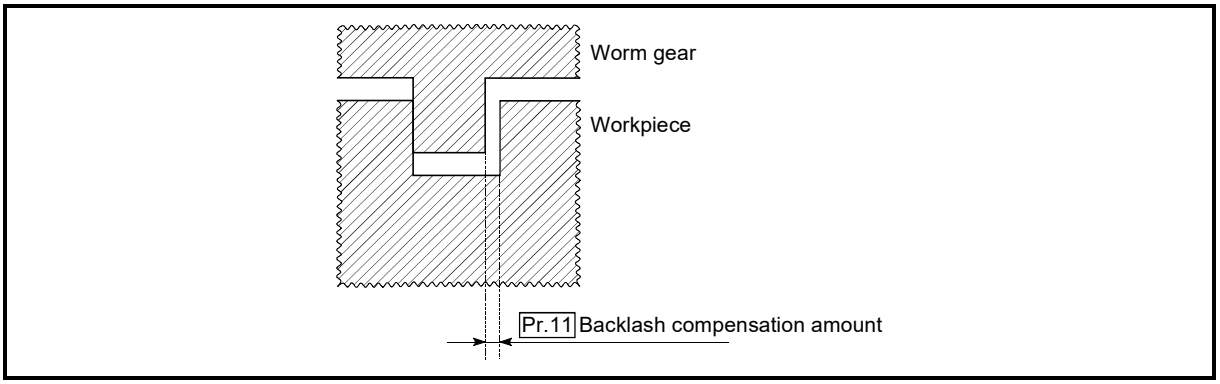

Fig. 13.8 Backlash compensation amount

[2] Precautions during control

(1) The feed command of the backlash compensation amount are not added to the "[Md.20] Command position value" or "[Md.21] Feed machine value".

(2) Always carry out a machine HPR before starting the control when using the backlash compensation function (when "[Pr.11] Backlash compensation amount" is set). The backlash in the mechanical system cannot be correctly compensated if a machine HPR is not carried out.

(3) Backlash compensation, which includes the movement amount and "[Pr.11] Backlash compensation amount", is output the moment at the moving direction changes.
Refer to "[Pr.11] Backlash compensation amount" in Section 5.2.3 "Detailed parameters 1" for details on the setting.

(4) Backlash compensation cannot be made during the speed control mode, torque control mode or continuous operation to torque control mode.

(5) In an axis operation such as positioning after HPR, whether the backlash compensation is necessary or not is judged from "[Pr.44] HPR direction" of the Simple Motion module. When the positioning is executed in the same direction as "[Pr.44] HPR direction", the backlash compensation is not executed. However, when the positioning is executed in the reverse direction against "[Pr.44] HPR direction", the backlash compensation is executed.

[3] Setting the backlash compensation function

To use the "backlash compensation function", set the "backlash compensation amount" in the parameter shown in the following table, and write it to the Simple Motion module.
The set details are validated at the rising edge (OFF → ON) of the PLC READY signal [Y0].

Setting item		Setting value	Setting details	Factory-set initial value
[Pr.11]	Backlash compensation amount	→	Set the backlash compensation amount.	0

*: Refer to Section 5.2 "List of parameters" for setting details.

REMARK

- Parameters are set for each axis.
- It is recommended that the parameters be set whenever possible with GX Works2. Execution by sequence program uses many sequence programs and devices. The execution becomes complicated, and the scan times will increase.

13.3.2 Electronic gear function

The "electronic gear function" adjusts the actual machine movement amount and number of pulse output to servo amplifier according to the parameters set in the Simple Motion module.
This function is different from "electronic gear function" of the servo amplifier. For the "electronic gear function" of the servo amplifier, refer to the instruction manual or manual of the servo amplifier.

The "electronic gear function" has the following three functions ([A] to [C]).

[A] During machine movement, the function increments in the Simple Motion module values less than one pulse that could not be output, and outputs the incremented amount when the total incremented value reached one pulse or more.

[B] When machine HPR is completed, current value changing is completed, speed control is started (except when command position value is updated), or fixed-feed control is started, the function clears to "0" the cumulative values of less than one pulse which could not be output. (If the cumulative value is cleared, an error will occur by a cleared amount in the feed machine value. Control can be constantly carried out at the same machine movement amount, even when the fixed-feed control is continued.)

[C] The function compensates the mechanical system error of the command movement amount and actual movement amount by adjusting the "electronic gear".
(The "movement amount per pulse" value is defined by "[Pr.2] Number of pulses per rotation (AP)", "[Pr.3] Movement amount per rotation (AL)" and "[Pr.4] Unit magnification (AM)".)

The Simple Motion module automatically carries out the processing for [A] and [B].

The details shown below explain about the "electronic gear function", including the method for compensating the error in [C] above, etc.

[1] Basic concept of the electronic gear
[2] The method for compensating the error

■ Precautions

When MR-J5(W)-B series is used, there are restrictions on the electronic gear setting of the servo amplifier depending on the operation mode and encoder resolution.
Refer to "Appendix 6.6 Connection with MR-J5(W)-B" for details.

[1] Basic concept of the electronic gear

The electronic gear is an item which determines how many rotations (rotations by how many pulses) the motor must make in order to move the machine according to the programmed movement amount.

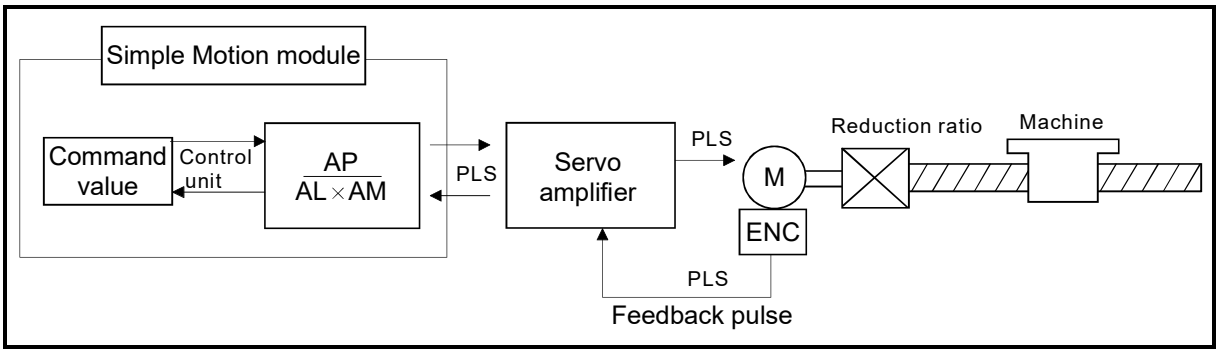

The basic concept of the electronic gear is represented by the following expression.

- [Pr.2] (Number of pulses per rotation) = AP
- [Pr.3] (Movement amount per rotation) = AL
- [Pr.4] (Unit magnification) = AM
- Movement amount per rotation that considered unit magnification = ΔS

$$\text{Electronic gear} = \frac{AP}{\Delta S} = \frac{AP}{AL \times AM} \quad \ldots(1)$$

Set values for AP, AL and AM so that this related equation is established. However, because values to be set for AP, AL and AM have the settable range, values calculated (reduced) from the above related equation must be contained in the setting range for AP, AL and AM.

(1) For "Ball screw" + "Reduction gear"

When the ball screw pitch is 10mm, the motor is the HG-KR (4194304 PLS/rev) and the reduction ratio is 9/44.

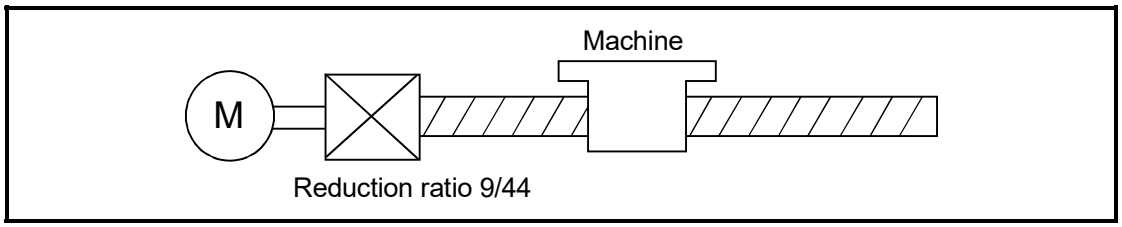

First, find how many millimeters the load (machine) will travel (ΔS) when the motor turns one revolution (AP).

- AP (Number of pulses per rotation) = 4194304 [PLS]
- ΔS (Movement amount per rotation)

= Ball screw pitch $\times$ Reduction ratio
= 10 [mm] $\times$ 9/44
= 10000.0 [μm] $\times$ 9/44

When the control unit is "mm", the minimum command unit is 0.1 μm.

(Note): When using a motor HK-KT (67108864 pulse/rev), set the servo parameters of the MR-J5(W)-B as follows.

- Electronic gear numerator (PA06): 16
- Electronic gear denominator (PA07): 1

Therefore, AP (number of pulses per rotation) becomes the following value.

AP (number of pulses per rotation) = 67108864 [PLS] $\times$ 1/16
= 4194304 [PLS]

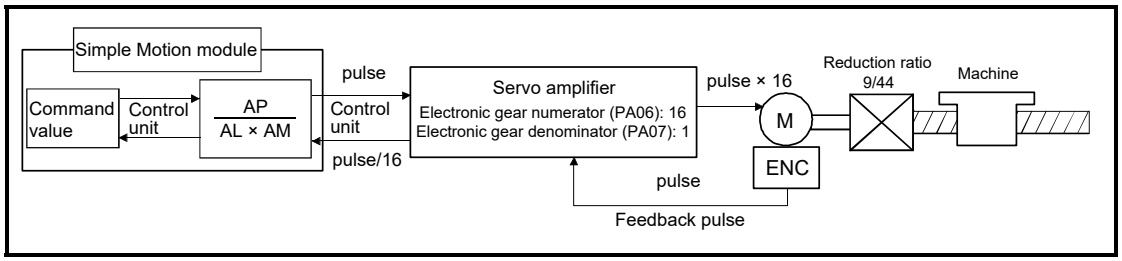

Substitute this for the above expression (1).

At this time, make calculation with the reduction ratio 9/44 remaining as a fraction.

$$\frac{AP}{\Delta S} = \frac{4194304\ [PLS]}{10000.0\ [\mu m] \times 9/44}$$

$$= \frac{4194304 \times 44}{10000.0 \times 9}$$

$$= \frac{184549376}{90000.0}$$

$$= \frac{23068672}{11250.0} \qquad = \frac{23068672\ (AP)}{11250.0\ (AL) \times 1\ (AM)}$$

$$= \frac{23068672\ (AP)}{1125.0\ (AL) \times 10\ (AM)}$$

Thus, AP, AL and AM to be set are as follows.

AP	= 23068672 ...[Pr.2]		AP = 23068672 ...[Pr.2]
AL	= 11250.0 …[Pr.3]	or	AL = 1125.0 …...[Pr.3]
AM	= 1 ……[Pr.4]		AM = 10 ……...[Pr.4]

Note): These two examples of settings are only examples. There are settings other than these examples.

(2) When "PLS (pulse)" is set as the control unit

When using PLS (pulse) as the control unit, set the electronic gear as follows.

AP = "Number of pulses per rotation"
AL = "Movement amount per rotation"
AM = 1

Example) When the motor is the HG-KR (4194304PLS/rev)

AP = 4194304 .. [Pr.2]

AL = 4194304 .. [Pr.3]

AM = 1 ……... [Pr.4]

(Note): When using a motor HK-KT (67108864 pulse/rev), set the servo parameters of the MR-J5(W)-B as follows.

- Electronic gear numerator (PA06): 16
- Electronic gear denominator (PA07): 1

(3) When "degree" is set as the control unit for a rotary axis

When the rotary axis is used, the motor is HG-KR (4194304PLS/rev) and the reduction ratio is 3/11.

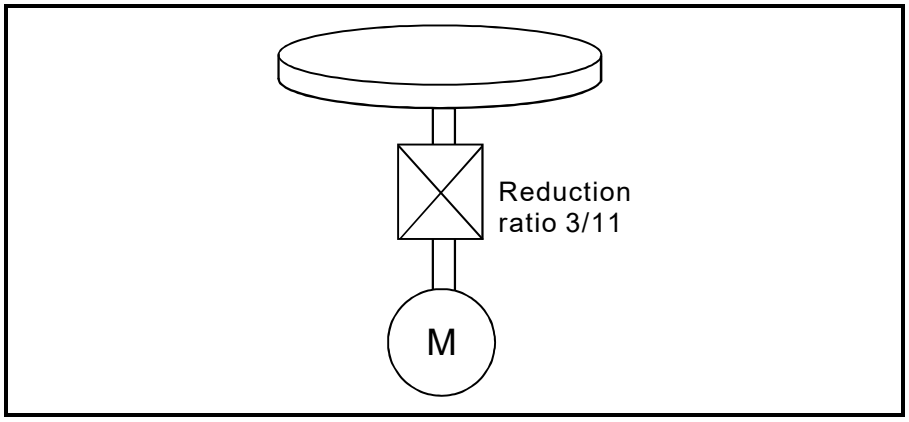

First, find how many degrees the load (machine) will travel (ΔS) when the motor turns one revolution (AP).

- AP (Number of pulses per rotation) = 4194304 [PLS]
- ΔS (Movement amount per rotation)
  = 360.00000 [degree] $\times$ Reduction ratio
  = 360.00000 $\times$ 3/11

(Note): When using a motor HK-KT (67108864 pulse/rev), set the servo parameters of the MR-J5(W)-B as follows.
- Electronic gear numerator (PA06): 16
- Electronic gear denominator (PA07): 1

Therefore, AP (number of pulses per rotation) becomes the following value.

AP (number of pulses per rotation) = 67108864 [PLS] $\times$ 1/16
= 4194304 [PLS]

Substitute this for the above expression (1).
At this time, make calculation with the reduction ratio 3/11 remaining as a fraction.

$$\frac{AP}{\Delta S} = \frac{4194304\ [PLS]}{360.00000\ [degree] \times 3/11}$$

$$= \frac{4194304\ [PLS] \times 11}{360.00000 \times 3}$$

$$= \frac{46137344}{1080.00000}$$

$$= \frac{2883584}{67.50000} \qquad = \frac{2883584\ (AP)}{67.50000(AL) \times 1\ (AM)}$$

$$= \frac{2883584\ (AP)}{0.06750\ (AL) \times 1000\ (AM)}$$

Thus, AP, AL and AM to be set are as follows.

AP	= 2883584 ……[Pr.2]		AP	= 2883584 …[Pr.2]
AL	= 67.50000 ….[Pr.3]	or	AL	= 0.06750 …[Pr.3]
AM	= 1 ……..….[Pr.4]		AM	= 1000 …….[Pr.4]

Note): These two examples of settings are only examples. There are settings other than these examples.

(4) When "mm" is set as the control unit for conveyor drive (calculation including π)

When the belt conveyor drive is used, the conveyor diameter is 135mm, the pulley ratio is 1/3, the motor is HG-KR (4194304PLS/rev) and the reduction ratio is 7/53.

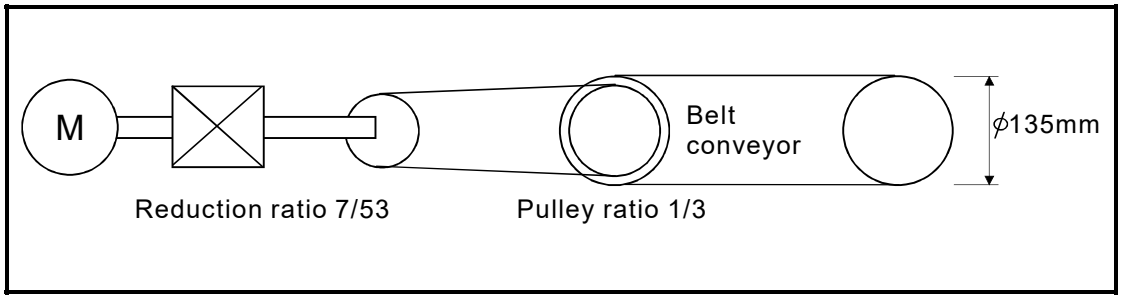

As the travel value of the conveyor is used to exercise control, set "mm" as the control unit.

First, find how many millimeters the load (machine) will travel (ΔS) when the motor turns one revolution (AP).

- AP (Number of pulses per rotation) = 4194304 [PLS]
- ΔS (Movement amount per rotation)

  = 135000.0 [μm] × π × Reduction ratio

  = 135000.0 [μm] × π × 7/53 × 1/3

(Note): When using a motor HK-KT (67108864 pulse/rev), set the servo parameters of the MR-J5(W)-B as follows.

- Electronic gear numerator (PA06): 16
- Electronic gear denominator (PA07): 1

Therefore, AP (number of pulses per rotation) becomes the following value.

AP (number of pulses per rotation) = 67108864 [PLS] × 1/16

= 4194304 [PLS]

Substitute this for the above expression (1).

At this time, make calculation with the reduction ratio 7/53 × 1/3 remaining as a fraction.

$$\frac{AP}{\Delta S} = \frac{AP}{AL \times AM} = \frac{4194304\ [PLS]}{135000.0\ [\mu m] \times \pi \times 7/53 \times 1/3}$$

$$= \frac{4194304 \times 53 \times 3}{135000.0 \times \pi \times 7}$$

$$= \frac{166723584}{236250 \times \pi}$$

Here, make calculation on the assumption that π is equal to 3.141592654.

$$\frac{AP}{\Delta S} = \frac{AP}{AL \times AM} = \frac{166723584}{742201.2645075}$$

AL has a significant number to first decimal place, round down numbers to two decimal places.

$$\frac{AP}{\Delta S} = \frac{AP}{AL \times AM} = \frac{166723584}{742201.2} = \frac{166723584\ (AP)}{742201.2\ (AL) \times 1(AM)}$$

Thus, AP, AL and AM to be set are as follows.

AP = 166723584 ….[Pr.2]

AL = 742201.2 ..…..[Pr.3]

AM = 1 ……...…[Pr.4]

This setting will produce an error for the true machine value, but it cannot be helped. This error is as follows.

$$\left(\frac{7422012/166723584}{2362500\ \pi/166723584} - 1\right) \times 100 = -8.69 \times 10^{-6}\ [\%]$$

- AP (Number of pulses per rotation) = 4194304 [PLS]
- ΔS (Movement amount per rotation)
  = 135000.0 [μm] × π × Reduction ratio
  = 135000.0 [μm] × π × 7/53 × 1/3

It is equivalent to an about 86.9 [μm] error in continuous 1km feed.

(5) Number of pulses/ movement amount at linear servo use

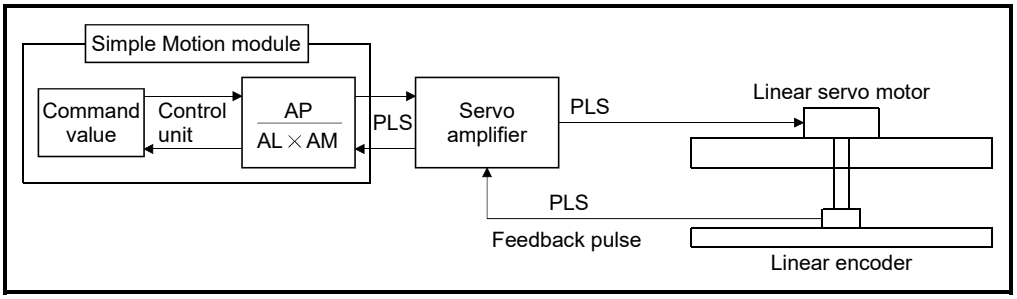

Calculate the number of pulses (AP) and movement amount (AL × AM) for the linear encoder in the following conditions.

$$\text{Linear encoder resolution} = \frac{\text{Number of pulses (AP)}}{\text{Movement amount (AL} \times \text{AM)}}$$

Linear encoder resolution: 0.05[μm] per PLS

$$\frac{1[PLS]}{0.05[\mu m]} = \frac{\text{Number of pulses (AP) [PLS]}}{\text{Movement amount (AL) [}\mu m]} = \frac{20}{1.0}$$

Set the number of pulses in "[Pr.2] Number of pulses per rotation (AP)", the movement amount in "[Pr.3] Movement amount per rotation (AL)", and the unit magnification in "[Pr.4] Unit magnification (AM)" in the actual setting.

(Note-1): When using MR-J4(W)-B, set the same value in AP, AL, and AM as the value set in the servo parameter "Linear encoder resolution - Numerator (PL02)" and "Linear encoder resolution - Denominator (PL03)".
Refer to each servo amplifier instruction manual for details.

(Note-2): When using MR-J5(W)-B, set the same value in AP, AL, and AM as the value set in the servo parameter "Electronic gear numerator (PA06)", "Electronic gear denominator (PA07)", "Linear encoder resolution - Numerator (PL02)", and "Linear encoder resolution - Denominator (PL03)".
Refer to the manual of each servo amplifier for details.

MR-J4(W)-B/MR-J3(W)-B: When "Linear encoder resolution - Numerator (PL02)" is set to 1 [μm] and "Linear encoder resolution - Denominator (PL03)" is set to 20 [μm], the values of AP, AL and AM are shown below.

AP = 20 …….[Pr.2]

AL = 1.0 ..…...…[Pr.3]

AM = 1 …….[Pr.4]

MR-J5(W)-B: When "Electronic gear numerator (PA06)" is set to "1", "Electronic gear denominator (PA07)" is set to "1", "Linear encoder resolution - Numerator (PL02)" is set to "1 [μm]", and "Linear encoder resolution - Denominator (PL03)" is set to "20 [μm]", the values of AP, AL, and AM are shown below.

AP = 20 …….[Pr.2]

AL = 1.0 ..…...…[Pr.3]

AM = 1 …….[Pr.4]

[2] The method for compensating the error

When the position control is carried out using the "Electronic gear" set in a parameter, this may produce an error between the command movement amount (L) and the actual movement amount (L'). With Simple Motion module, this error is compensated by adjusting the electronic gear.
The "Error compensation amount", which is used for error compensation, is defined as follows:

$$\text{Error compensation amount} = \frac{\text{Command movement amount (L)}}{\text{Actual movement amount (L')}}$$

The electronic gear including an error compensation amount is shown below.

$$\frac{AP}{AL \times AM} \times \frac{L}{L'} = \frac{AP'}{AL' \times AM'}$$

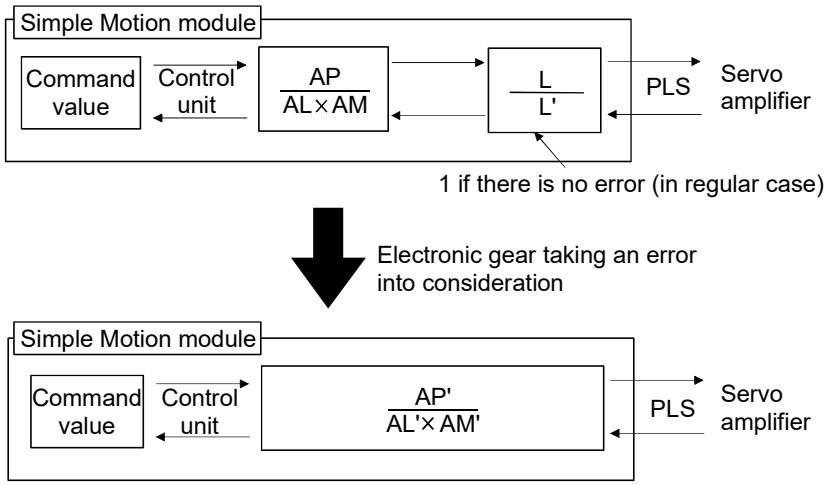

Calculation example

(Conditions)

Number of pulses per rotation (AP) : 4194304 [PLS]
Movement amount per rotation (AL) : 5000.0 [μm]
Unit magnification (AM) : 1

(Positioning results)

Command movement amount (L) : 100 [mm]
Actual movement amount (L') : 101 [mm]

(Compensation value)

$$\frac{AP}{AL \times AM} \times \frac{L}{L'} = \frac{4194304}{5000.0 \times 1} \times \frac{100}{101} = \frac{4194304\ (AP')}{5050(AL') \times 1(AM')}$$

Number of pulses per rotation (AP') : 4194304 …[Pr.2]
Movement amount per rotation (AL') : 5050.0 ….[Pr.3]
Unit magnification (AM') : 1 ……....[Pr.4]

Set the post-compensation "[Pr.2] Number of pulses per rotation (AP')", "[Pr.3] Movement amount per rotation (AL')", and "[Pr.4] Unit magnification (AM')" in the parameters, and write them to the Simple Motion module.
The set details are validated at the rising edge (OFF → ON) of the PLC READY signal [Y0].

13.3.3 Near pass function

When continuous pass control is carried out using interpolation control, the near pass function is carried out.

The "near pass function" is a function to suppress the mechanical vibration occurring at the time of switching the positioning data when continuous pass control is carried out using interpolation control.

[Near pass function]
The extra movement amount occurring at the end of each positioning data unit being continuously executed is carried over to the next positioning data unit. Alignment is not carried out, and thus the output speed drops are eliminated, and the mechanical vibration occurring during speed changes can be suppressed. Because alignment is not carried out, the operation is controlled on a path that passes near the position set in "[Da.6] Positioning address/movement amount".

The details shown below explain about the "near pass function".
[1] Control details
[2] Precautions during control

[1] Control details

The following drawing shows the path of the continuous path control by the 2-axis linear interpolation control.

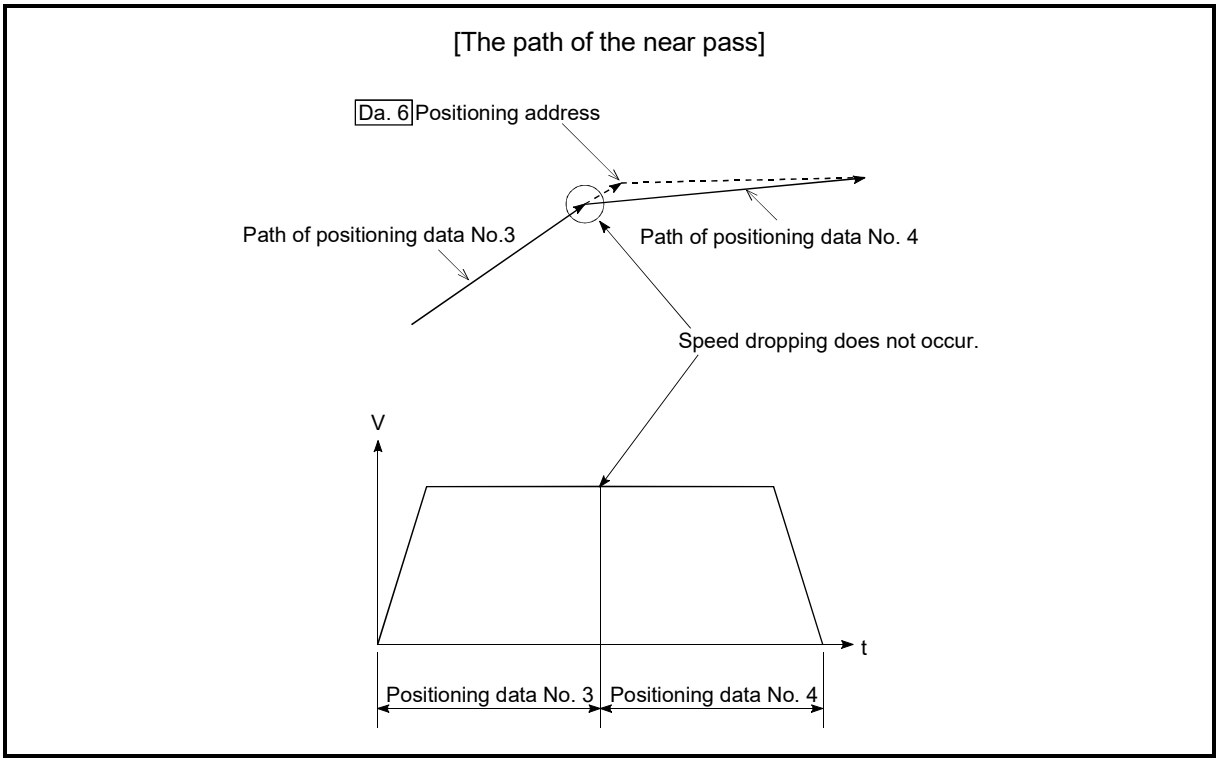

Fig. 13.9 The path of the continuous path control

[2] Precautions during control

(1) If the movement amount designated by the positioning data is small when the continuous path control is executed, the output speed may not reach the designated speed.

(2) The movement direction is not checked during interpolation operation. Therefore, a deceleration stops are not carried out even if the movement direction changes. (See below) For this reason, the output will rapidly reverse when the reference axis movement direction changes. To prevent the rapid output reversal, assign not the continuous path control "11", but the continuous positioning control "01" to the positioning data of the passing point.

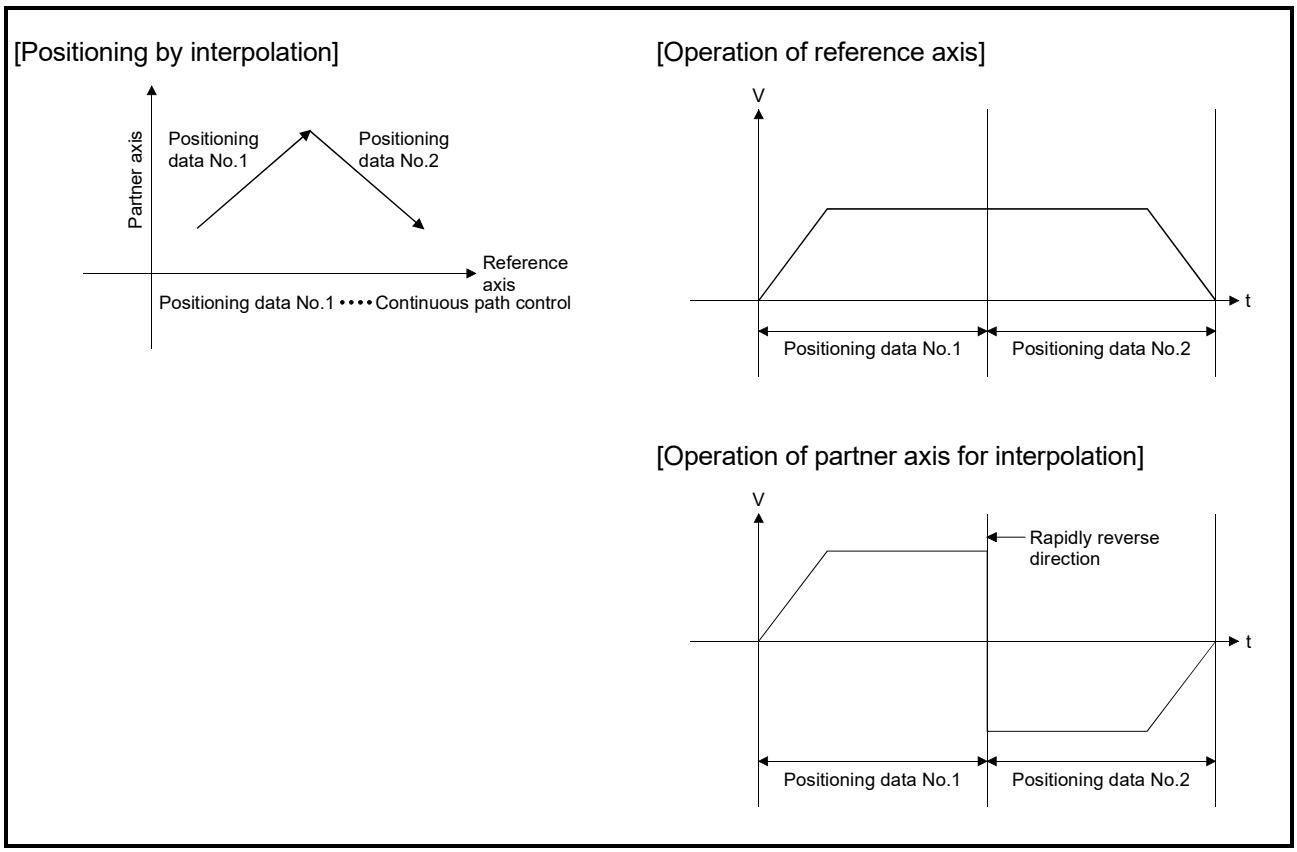

Fig. 13.10 Path and output speed of various axes when movement direction varies during continuous path control

13.4 Functions to limit the control

Functions to limit the control include the "speed limit function", "torque limit function", "software stroke limit function", "hardware stroke limit function", and "forced stop function". Each function is executed by parameter setting or sequence program creation and writing.

13.4.1 Speed limit function

The speed limit function limits the command speed to a value within the "speed limit value" setting range when the command speed during control exceeds the "speed limit value".

The details shown below explain about the "speed limit function".
[1] Relation between the speed limit function and various controls
[2] Precautions during control
[3] Setting the speed limit function

[1] Relation between the speed limit function and various controls

The following table shows the relation of the "speed limit function" and various controls.

Control type			Speed limit function	Speed limit value
HPR control	Machine HPR control		◎	[Pr.8] Speed limit value
	Fast HPR control		◎	
Major positioning control	Position control	1-axis linear control	◎	
		2 to 4-axes linear interpolation control	◎	
		1-axis fixed-feed control	◎	
		2 to 4-axes fixed-feed control (interpolation)	◎	
		2-axis circular interpolation control	◎	
	1 to 4-axes Speed control		◎	
	Speed-position switching control, Position-speed switching control		◎	
	Other control	Current value changing	–	Setting value invalid
		JUMP instruction, NOP instruction, LOOP to LEND	–	
Manual control	JOG operation, Inching operation		◎	[Pr.31] JOG speed limit value
	Manual pulse generator operation		–	Setting is invalid
Expansion control	Speed-torque control		◎	[Pr.8] Speed limit value

◎ : Always set
– : Setting not required (Use the initial value or a value within the setting range.)

[2] Precautions during control

(1) If any axis exceeds "[Pr.8] Speed limit value" during 2- to 4-axis speed control, the axis exceeding the speed limit value is controlled with the speed limit value. The speeds of the other axes being interpolated are suppressed by the command speed ratio.

(2) If the reference axis exceeds "[Pr.8] Speed limit value" during 2-axis circular interpolation control, the reference axis is controlled with the speed limit value (The speed limit does not function on the interpolation axis side.)

(3) If any axis exceeds "[Pr.8] Speed limit value" during 2- to 4-axis linear interpolation control or 2- to 4-axis fixed-feed control, the axis exceeding the speed limit value is controlled with the speed limit value. The speeds of the other axes being interpolated are suppressed by the movement amount ratio.

POINT

When the "reference axis speed" is set during interpolation control, set so the major axis side becomes the reference axis. If the minor axis side is set as the reference axis, the major axis side speed may exceed the "[Pr.8] Speed limit value".

[3] Setting the speed limit function

To use the "speed limit function", set the "speed limit value" in the parameters shown in the following table, and write them to the Simple Motion module.
The set details are validated at the next start after they are written to the Simple Motion module.

Setting item		Setting value	Setting details	Factory-set initial value
[Pr.8]	Speed limit value	→	Set the speed limit value (max. speed during control).	200000
[Pr.31]	JOG speed limit value	→	Set the speed limit value during JOG operation (max. speed during control). (Note that "[Pr.31] JOG speed limit value" shall be less than or equal to "[Pr.8] Speed limit value".)	20000

*: Refer to Section 5.2 "List of parameters" for setting details.

REMARK

- Parameters are set for each axis.
- It is recommended that the parameters be set whenever possible with GX Works2. Execution by sequence program uses many sequence programs and devices. The execution becomes complicated, and the scan times will increase.

13.4.2 Torque limit function

The "torque limit function" limits the generated torque to a value within the "torque limit value" setting range when the torque generated in the servomotor exceeds the "torque limit value".
The "torque limit function" protects the deceleration function, limits the power of the operation pressing against the stopper, etc. It controls the operation so that unnecessary force is not applied to the load and machine.

The details shown below explain about the "torque limit function".

[1] Relation between the torque limit function and various controls
[2] Control details
[3] Precautions during control
[4] Setting the torque limit function

[1] Relation between the torque limit function and various controls

The following table shows the relation of the "torque limit function" and various controls.

Control type			Torque limit function	Torque limit value *
HPR control	Machine HPR control		○	"[Pr.17] Torque limit setting value" or "[Cd.101] Torque output setting value". *: After the "[Pr.47] Creep speed" is reached, this value becomes the "[Pr.54] HPR torque limit value".
	Fast HPR control		○	"[Pr.17] Torque limit setting value" or "[Cd.101] Torque output setting value".
Major positioning control	Position control	1-axis linear control	○	
		2 to 4-axes linear interpolation control	○	
		1-axis fixed-feed control	○	
		2 to 4-axes fixed-feed control (interpolation)	○	
		2-axis circular interpolation control	○	
	1 to 4-axes speed control		○	
	Speed-position switching control Position-speed switching control		○	
	Other control	Current value changing	–	Setting value is invalid.
		JUMP instruction, NOP instruction, LOOP to LEND	–	
Manual control	JOG operation, Inching operation		○	"[Pr.17] Torque limit setting value" or "[Cd.101] Torque output setting value".
	Manual pulse generator operation		○	
Expansion control	Speed-torque control		○	Torque limit value before switching control mode is continued.

○ : Set when required (Set to " – " when not used.)
– : Setting not required (Use the initial value or a value within the setting range.)
* : Shows the torque limit value when "[Cd.22] New torque value/forward new torque value" or "[Cd.113] New reverse torque value" is set to "0".

[2] Control details

The following drawing shows the operation of the torque limit function.

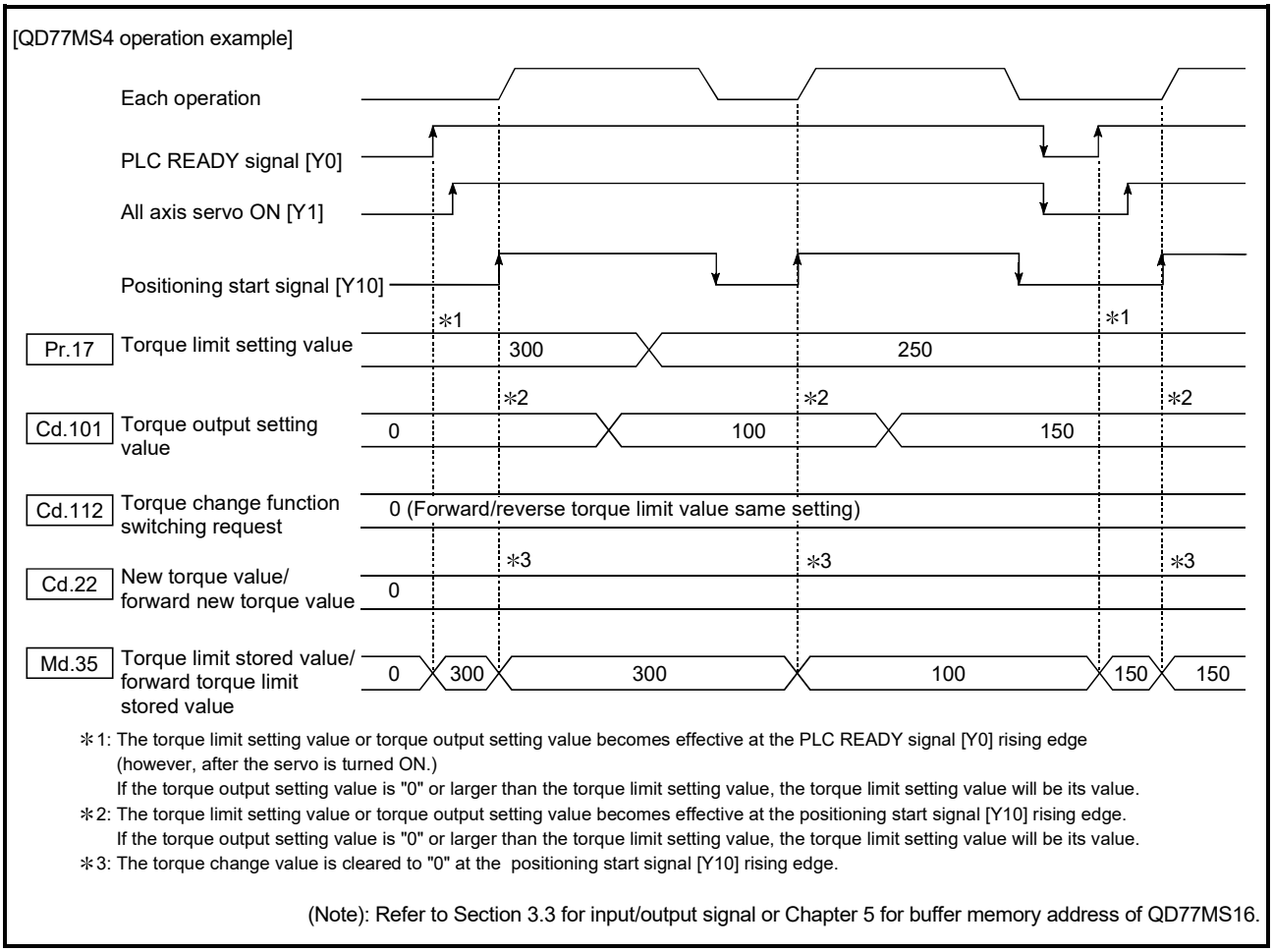

∗1: The torque limit setting value or torque output setting value becomes effective at the PLC READY signal [Y0] rising edge (however, after the servo is turned ON.)
If the torque output setting value is "0" or larger than the torque limit setting value, the torque limit setting value will be its value.

∗2: The torque limit setting value or torque output setting value becomes effective at the positioning start signal [Y10] rising edge.
If the torque output setting value is "0" or larger than the torque limit setting value, the torque limit setting value will be its value.

∗3: The torque change value is cleared to "0" at the positioning start signal [Y10] rising edge.

(Note): Refer to Section 3.3 for input/output signal or Chapter 5 for buffer memory address of QD77MS16.

Fig. 13.11 Torque limit function operation

[3] Precautions during control

(1) When limiting the torque at the "[Pr.17] Torque limit setting value", confirm that "[Cd.22] New torque value/forward new torque value" or "[Cd.113] New reverse torque value" is set to "0". If this parameter is set to a value besides "0", the setting value will be validated, and the torque will be limited at that value. (Refer to Section 13.5.4 "Torque change function" for details about the "new torque value".)

(2) When the "[Pr.54] HPR torque limit value" exceeds the "[Pr.17] Torque limit setting value", the error "HPR torque limit value error" (error code: 995) occurs.

(3) When the operation is stopped by torque limiting, the droop pulse will remain in the deviation counter. If the load torque is eliminated, operation for the amount of droop pulses will be carried out. Note that the movement might start rapidly as soon as the load torque is eliminated.

[4] Setting the torque limit function

(1) To use the "torque limit function", set the "torque limit value" in the parameters shown in the following table, and write them to the Simple Motion module.

a) The set details are validated at the rising edge (OFF → ON) of the PLC READY signal [Y0].

Setting item		Setting value	Setting details	Factory-set initial value
[Pr.17]	Torque limit setting value	→	Set the torque limit value as a percentage.	300
[Pr.54]	HPR torque limit value	→	Set the torque limit value after the "[Pr.47] Creep speed" is reached. Set as a percentage.	300

b) The set details are validated at the rising edge (OFF → ON) of the positioning start signal [Y10].

Setting item		Setting value	Setting details	Factory-set initial value
[Cd.101]	Torque output setting value	→	Set the torque output value as a percentage.	0

*: Refer to Section 5.2 "List of parameters" or Section 5.7 "List of control data" for setting details.

*: Torque limit value: Will be an upper limit value of the torque change value. Even if a larger value has been mistakenly input for the torque change value, it is restricted within the torque limit setting values to prevent an erroneous entry. (Even if a value larger than the torque limit setting value has been input to the torque change value, the torque value is not changed.)

*: Torque output setting value: to be taken at the start of positioning, and used as a torque limit value. If the value is "0" or larger than the torque limit setting value, the parameter "torque limit setting value" is taken at the start.

(2) The "torque limit value" set in the Simple Motion module is set in the "[Md.35] Torque limit stored value/forward torque limit stored value" or "[Md.120] Reverse torque limit stored value".

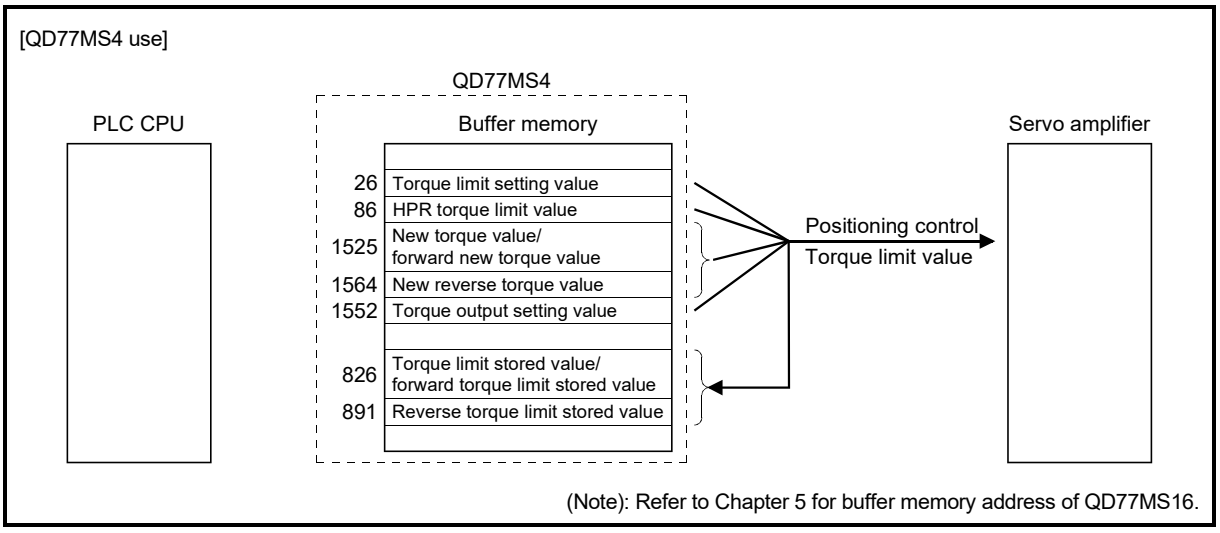

Fig. 13.12 Limiting the torque to the servo amplifier (Axis 1)

(3) The following table shows the "[Md.35] Torque limit stored value/forward torque limit stored value" and "[Md.120] Reverse torque limit stored value" of the buffer memory address.

Monitor item		Monitor value	Storage details	Buffer memory address	
				QD77MS2 QD77MS4	QD77MS16
[Md.35]	Torque limit stored value/forward torque limit stored value	→	The "torque limit value/forward torque limit stored value" valid at that time is stored. ([Pr.17], [Pr.54], [Cd.22] or [Cd.101])	826+100n	2426+100n
[Md.120]	Reverse torque limit stored value	→	The "reverse torque limit stored value" is stored depending on the control status. ([Pr.17], [Pr.54], [Cd.22], [Cd.101] or [Cd.113])	891+100n	2491+100n

n: Axis No.-1

*: Refer to Section 5.6 "List of monitor data" for information on the storage details.

REMARK

- Parameters are set for each axis.
- It is recommended that the parameters be set whenever possible with GX Works2. Execution by sequence program uses many sequence programs and devices. The execution becomes complicated, and the scan times will increase.
- Use "[Md.120] Reverse torque limit stored value" and "[Cd.113] New reverse torque value" only when "1: Forward/reverse torque limit value individual setting" is set in "[Cd.112] Torque change function switching request".
  (Refer to Section 13.5.4 "Torque change function".)

13.4.3 Software stroke limit function

In the "software stroke limit function" the address established by a machine HPR is used to set the upper and lower limits of the moveable range of the workpiece. Movement commands issued to addresses outside that setting range will not be executed.
In the Simple Motion module, the "command position value" and "feed machine value" are used as the addresses indicating the current position. However, in the "software stroke limit function", the address used to carry out the limit check is designated in the "[Pr.14] Software stroke limit selection". (Refer to Section 9.1.4 "Confirming the current value" or details on the "command position value" and "feed machine value".)
The upper and lower limits of the moveable range of the workpiece are set in "[Pr.12] Software stroke limit upper limit value"/"[Pr.13] Software stroke limit lower limit value".

The details shown below explain about the "software stroke limit function".

[1] Differences in the moveable range when "command position value" and "feed machine value" are selected.
[2] Software stroke limit check details
[3] Relation between the software stroke limit function and various controls
[4] Precautions during software stroke limit check
[5] Setting the software stroke limit function
[6] Invalidating the software stroke limit
[7] Setting when the control unit is "degree"

[1] Differences in the moveable range when "command position value" and "feed machine value" are selected.

The following drawing shows the moveable range of the workpiece when the software stroke limit function is used.

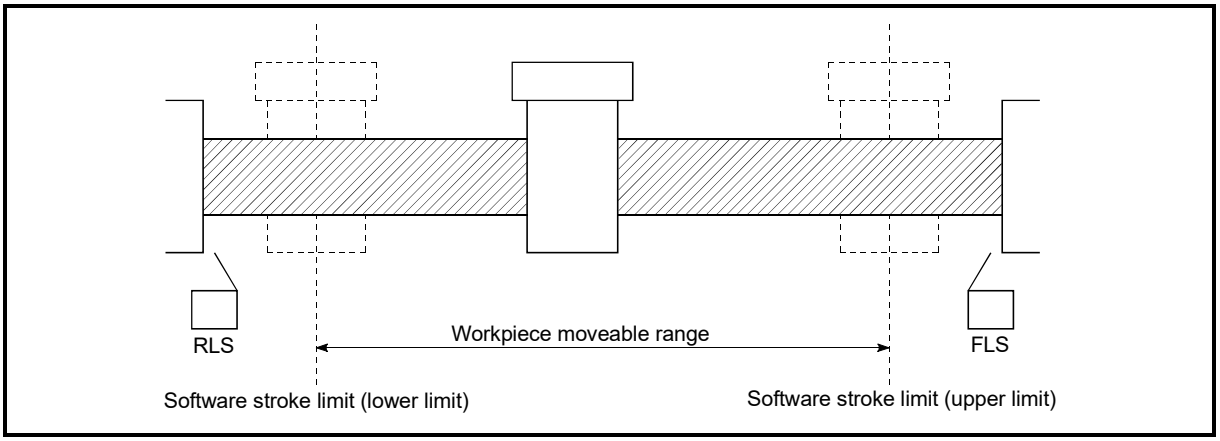

Fig. 13.13 Workpiece moveable range

The following drawing shows the differences in the operation when "[Md.20] Command position value" and "[Md.21] Feed machine value" are used in the moveable range limit check.

[Conditions]

Assume the current stop position is 2000, and the upper stroke limit is set to 5000.

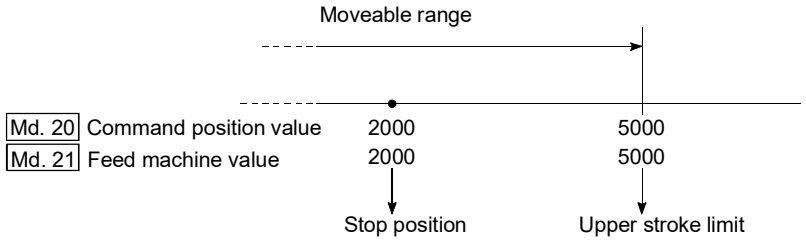

[Current value changing]

When the current current value is changed by a new current value command from 2000 to 1000, the command position value will change to 1000, but the feed machine value will stay the same at 2000.

1) When the feed machine value is set at the limit

The feed machine value of 5000 (command position value: 4000) becomes the upper stroke limit.

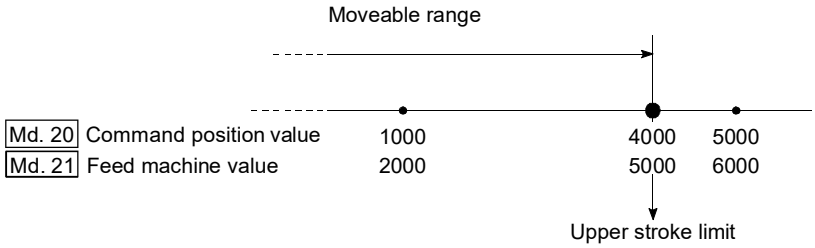

2) When the command position value is set at the limit

The command position value of 5000 (feed machine value: 6000) becomes the upper stroke limit.

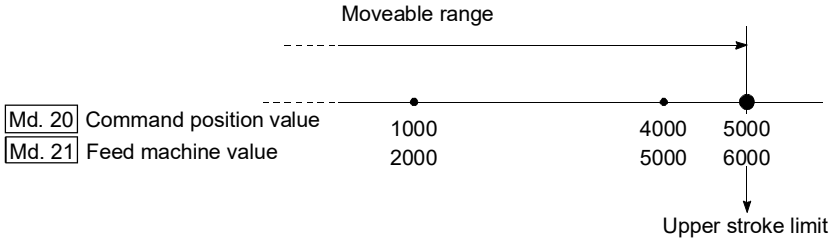

Fig. 13.14 Software stroke limits of the command position value and feed machine value

POINT

When "feed machine value" is set in "[Pr.14] Software stroke limit selection", the moveable range becomes an absolute range referenced on the HP. When "command position value" is set, the moveable range is the relative range from the "command position value".

[2] Software stroke limit check details

Check details		Processing when an error occurs
1)	An error shall occur if the current value*1 is outside the software stroke limit range*2. (Check "[Md.20] Command position value" or "[Md.21] Feed machine value".)	The error "Software stroke limit +" (error code: 507) or "Software stroke limit -" (error code: 508) will occur.
2)	An error shall occur if the command address is outside the software stroke limit range. (Check "[Da.6] Positioning address/movement amount".)	

*1: Check whether the "[Md.20] Command position value" or "[Md.21] Feed machine value" is set in "[Pr.14] Software stroke limit selection".

*2: Moveable range from the "[Pr.12] Software stroke limit upper limit value" to the "[Pr.13] Software stroke limit lower limit value".

[3] Relation between the software stroke limit function and various controls

<table>
<tr><th colspan="4">Control type</th><th>Limit check</th><th>Processing at check</th></tr>
<tr><td rowspan="3">HPR control</td><td colspan="2" rowspan="2">Machine HPR control</td><td>Data set method</td><td>◎</td><td>The home position return control will not be carried out if the home position address is outside the software stroke limit range.</td></tr>
<tr><td>Other than "Data set method"</td><td>–</td><td rowspan="2">Check not carried out.</td></tr>
<tr><td colspan="3">Fast HPR control</td><td>–</td></tr>
<tr><td rowspan="9">Major positioning control</td><td rowspan="5">Position control</td><td colspan="2">1-axis linear control</td><td>◎</td><td rowspan="6">Checks 1) and 2) in the previous section [2] are carried out.
For speed control : The axis decelerates to a stop when it exceeds the software stroke limit range.
For position control: The axis comes to an immediate stop when it exceeds the software stroke limit range.</td></tr>
<tr><td colspan="2">2 to 4-axes axis linear interpolation control</td><td>◎</td></tr>
<tr><td colspan="2">1-axis fixed-feed control</td><td>◎</td></tr>
<tr><td colspan="2">2 to 4-axes fixed-feed control (interpolation)</td><td>◎</td></tr>
<tr><td colspan="2">2-axis circular interpolation control</td><td>◎</td></tr>
<tr><td colspan="3">1 to 4-axes speed control</td><td>○*1, *2</td></tr>
<tr><td colspan="3">Speed-position switching control
Position-speed switching control</td><td>○*1, *2</td></tr>
<tr><td rowspan="2">Other control</td><td colspan="2">Current value changing</td><td>◎</td><td>The current value will not be changed if the new position value is outside the software stroke limit range.</td></tr>
<tr><td colspan="2">JUMP instruction, NOP instruction, LOOP to LEND</td><td>–</td><td>Check not carried out.</td></tr>
<tr><td rowspan="2">Manual control</td><td colspan="3">JOG operation, Inching operation</td><td>△*3</td><td rowspan="2">Check 1) in the previous section [2] is carried out.
The machine will carry out a deceleration stop when the software stroke limit range is exceeded. If the address is outside the software stroke limit range, the operation can only be started toward the moveable range.</td></tr>
<tr><td colspan="3">Manual pulse generator operation</td><td>△*3</td></tr>
<tr><td>Expansion control</td><td colspan="3">Speed-torque control</td><td>◎</td><td>Check 1) in the previous section [2] is carried out.
The mode switches to the position control mode when the software stroke limit range is exceeded, and the operation immediately stops.</td></tr>
</table>

◎ : Check valid

○ : Check is not made when the command position value is not updated (Refer to [Pr.21]) at the setting of "command position value" in "[Pr.14] Software stroke limit selection" during speed control.

– : Check not carried out (check invalid).

△ : Valid only when "0: valid" is set in the "[Pr.15] Software stroke limit valid/invalid setting".

*1: The value in "[Md.20] Command position value" will differ according to the "[Pr.21] Command position value during speed control" setting.

*2: When the unit is "degree", check is not made during speed control.

*3: When the unit is "degree", check is not carried out.

[4] Precautions during software stroke limit check

(1) A machine HPR must be executed beforehand for the "software stroke limit function" to function properly.

(2) During interpolation control, a stroke limit check is carried out for the every current value of both the reference axis and the interpolation axis. Every axis will not start if an error occurs, even if it only occurs in one axis.

(3) During circular interpolation control, the "[Pr.12] Software stroke limit upper limit value"/"[Pr.13] Software stroke limit lower limit value" may be exceeded. In this case, a deceleration stop will not be carried out even if the stroke limit is exceeded. Always install an external limit switch if there is a possibility the stroke limit will be exceeded.

Example

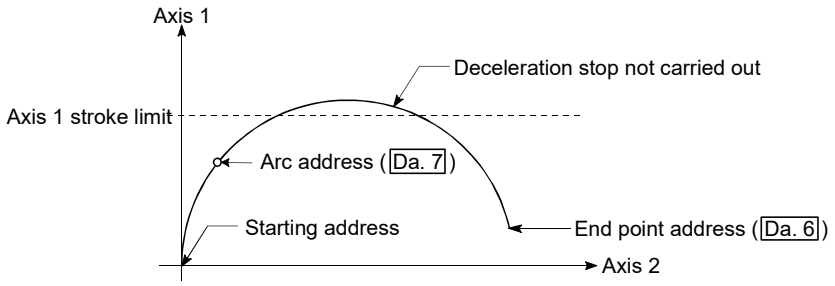

∗ : The software stroke limit check is carried out for the following addresses during circular interpolation control. (Note that "Da. 7 Arc address" is carried out only for circular interpolation control with sub point designation.)

Current value/end point address (Da. 6)/arc address (Da. 7)

(4) If an error is detected during continuous path control, the axis stops immediately on completion of execution of the positioning data located right before the positioning data in error.

Example

• If the positioning address of positioning data No. 13 is outside the software stroke limit range, the operation immediately stops after positioning data No. 12 has been executed.

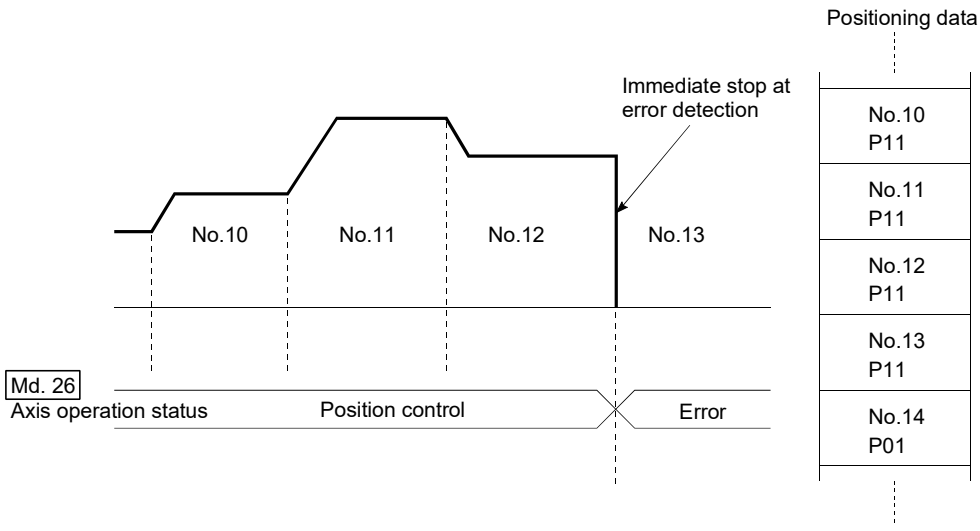

(5) During simultaneous start, a stroke limit check is carried out for the current values of every axis to be started. Every axis will not start if an error occurs, even if it only occurs in one axis.

[5] Setting the software stroke limit function

To use the "software stroke limit function", set the required values in the parameters shown in the following table, and write them to the Simple Motion module.

The set details are validated at the rising edge (OFF → ON) of the PLC READY signal [Y0].

Setting item		Setting value	Setting details	Factory-set initial value
[Pr.12]	Software stroke limit upper limit value	→	Set the upper limit value of the moveable range.	2147483647
[Pr.13]	Software stroke limit lower limit value	→	Set the lower limit value of the moveable range.	–2147483648
[Pr.14]	Software stroke limit selection	→	Set whether to use the "[Md.20] Command position value" or "[Md.21] Feed machine value" as the "current value".	0: Command position
[Pr.15]	Software stroke limit valid/invalid setting	0: Valid	Set whether the software stroke limit is validated or invalidated during manual control (JOG operation, Inching operation, manual pulse generator operation).	0: Valid

※: Refer to Section 5.2 "List of parameters" for setting details.

[6] Invalidating the software stroke limit

To invalidate the software stroke limit, set the following parameters as shown, and write them to the Simple Motion module. (Set the value within the setting range.)

[Pr.12]	Software stroke limit upper limit value	=	[Pr.13]	Software stroke limit lower limit value

(To invalidate only the manual operation, set "1: software stroke limit invalid" in the "[Pr.15] Software stroke limit valid/invalid setting".)

The set details are validated at the rising edge (OFF → ON) of the PLC READY signal [Y0].

When the unit is "degree", the software stroke limit check is not performed during speed control (including speed control in speed-position switching control or position-speed switching control) or during manual control, independently of the values set in [Pr.12], [Pr.13] and [Pr.15].

REMARK

- Parameters are set for each axis.
- It is recommended that the parameters be set whenever possible with GX Works2. Execution by sequence program uses many sequence programs and devices. The execution becomes complicated, and the scan times will increase.

[7] Setting when the control unit is "degree"

■ Current value address

The "[Md.20] Command position value" address is a ring address between 0 and 359.99999° .

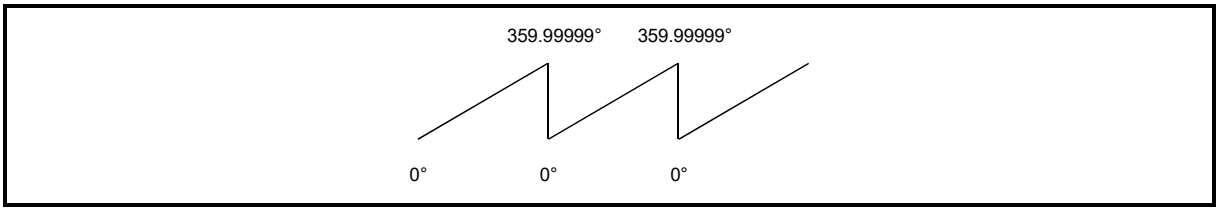

Fig. 13.15 Current value address when the control unit is "degree".

■ Setting the software stroke limit

The upper limit value/lower limit value of the software stroke limit is a value between 0 and 359.99999° .

(1) Setting when the software stroke limit is to be validated.
When the software stroke limit is to be validated, set the upper limit value in a clockwise direction from the lower limit value.

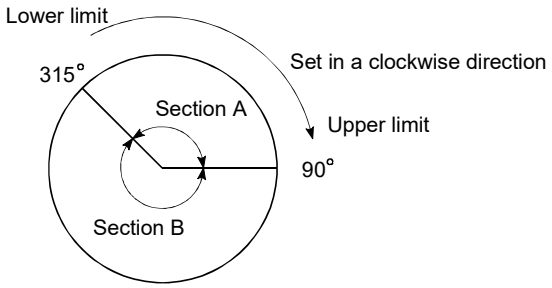

(a) Set the movement range of section A as follows.
- Software stroke limit lower limit value ..... 315.00000˚
- Software stroke limit upper limit value..... 90.00000˚

(b) Set the movement range of section B as follows.
- Software stroke limit lower limit value ..... 90.00000˚
- Software stroke limit upper limit value..... 315.00000˚

Fig. 13.16 Software stroke limit when the control unit is "degree"

13.4.4 Hardware stroke limit function

⚠DANGER
• When the hardware stroke limit is required to be wired, ensure to wire it in the negative logic using b-contact. If it is set in positive logic using a-contact, a serious accident may occur.

In the "hardware stroke limit function", limit switches are set at the upper/lower limit of the physical moveable range, and the control is stopped (by deceleration stop) by the input of a signal from the limit switch. Damage to the machine can be prevented by stopping the control before the upper/lower limit of the physical moveable range is reached.
The hardware stroke limit is able to use the following signals. (Refer to the "[Pr.80] External input signal selection".)

- External input signal of QD77MS
- External input signal of servo amplifier
- External input signal via CPU (buffer memory of QD77MS)

The details shown below explain about the "hardware stroke limit function".

[1] Control details
[2] Wiring the hardware stroke limit
[3] Precautions during control
[4] When the hardware stroke limit function is not used

[1] Control details

The following drawing shows the operation of the hardware stroke limit function.

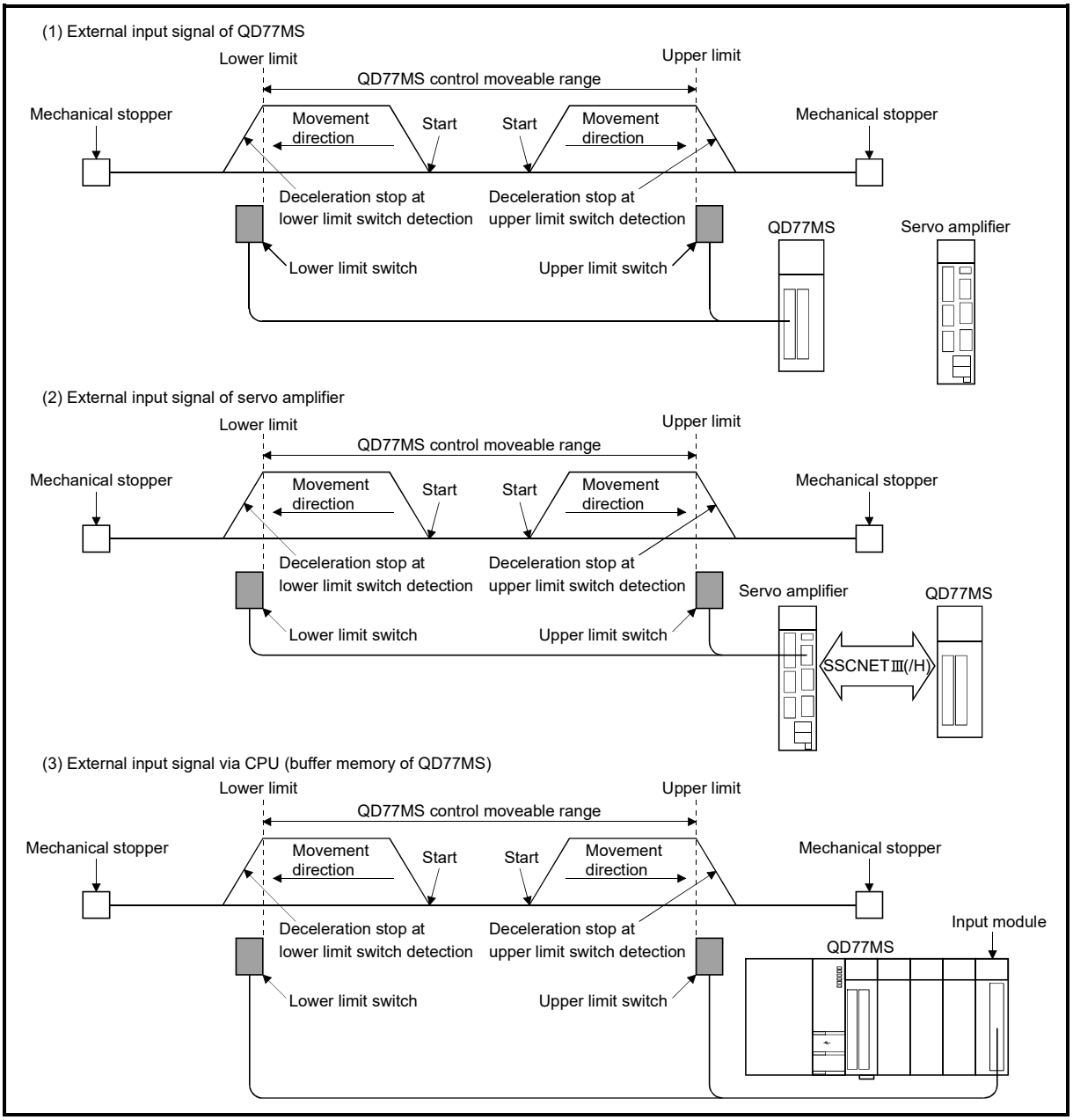

Fig. 13.17 Hardware stroke limit function operation

[2] Wiring the hardware stroke limit

When using the hardware stroke limit function, wire the signal terminals corresponding to the upper/lower stroke limit of the device to be used as shown in the following drawing.

(1) External input signal of QD77MS

Wire the upper/lower limit stroke limit terminals QD77MS/servo amplifier as shown in the following drawing. As for the 24 V DC polarity, both "+" and "-" are possible.

(When "[Pr.22] Input signal logic selection" is set to the initial value)

Example

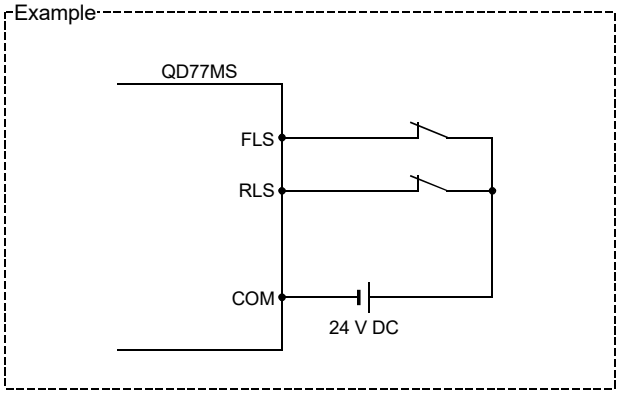

(2) External input signal of the servo amplifier

Refer to the servo amplifier instruction manual or manual for details on signal input availability and wiring.

Wire the MR-J3/MR-J4 series servo amplifier and MR-J5(W)-B as shown in the following drawing. As for the 24 V DC polarity, both "+" and "-" are possible.

(When "[Pr.22] Input signal logic selection" is set to the initial value)

Example

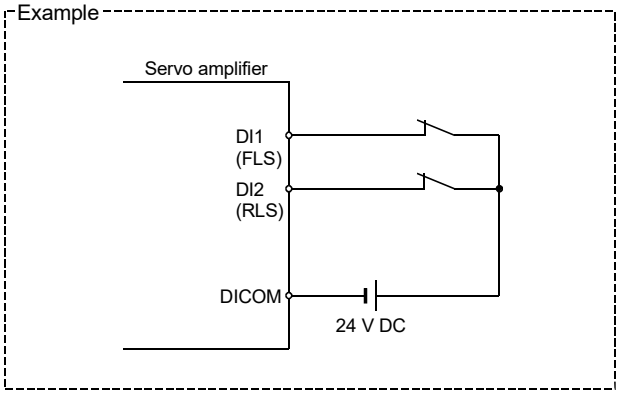

(3) External input signal via CPU (buffer memory of QD77MS)
For the wiring, refer to the manual of the module to which the external input signal is input.
At MR-JE-B(F) use, refer to Appendix 6.5 "Connection with MR-JE-B(F)".

POINT
Wire the limit switch installed in the direction to which "Command position value" increases as upper limit switch and the limit switch installed in the limit switch installed in the direction to which "Command position value" decreases as lower limit switch. If inverting the install positions of upper/lower limit switches, hardware stroke limit function cannot be operated properly. In addition, the servomotor does not stop. The increase/decrease of "Command position value" and the motor rotation direction/movement direction can be changed by the parameters depending on the servo amplifier. Refer to the servo amplifier instruction manual or manual for details.

[3] Precautions during control

(1) If the machine is stopped outside the Simple Motion module control range (outside the upper/lower limit switches), or if stopped by hardware stroke limit detection, the starting for the "HPR control", "major positioning control", and "high-level positioning control" and the control mode switching cannot be executed. To carry out these types of control again, return the workpiece to the Simple Motion module control range by a "JOG operation", "inching operation" or "manual pulse generator operation".

(2) When "[Pr.22] Input signal logic selection" is set to the initial value, the Simple Motion module cannot carry out the positioning control if FLS (limit switch for upper limit) is separated from DICOM or RLS (limit switch for lower limit) is separated from DICOM (including when wiring is not carried out).

[4] When the hardware stroke limit function is not used

When not using the hardware stroke limit function, set the logic of FLS and RLS to the "negative logic" (initial value) with "[Pr.22] Input signal logic selection" and input the signal which always turns ON. Otherwise, set the logic of FLS and RLS to the "positive logic" with "[Pr.22] Input signal logic selection" and always turn OFF the input.

13.4.5 Forced stop function

⚠DANGER
• When the forced stop is required to be wired, ensure to wire it in the negative logic using b-contact. • Provided safety circuit outside the Simple Motion module so that the entire system will operate safety even when the "[Pr.82] Forced stop valid/invalid selection" is set "1: Invalid". Be sure to use the forced stop signal (EMI) of the servo amplifier.

"Forced stop function" stops all axes of the servo amplifier with the forced stop signal. (The initial value is set to "0: Valid (External input signal)".)
The forced stop input valid/invalid is selected by "[Pr.82] Forced stop valid/invalid selection".

The details shown below explain about the "forced stop function".
[1] Control details
[2] Wiring the forced stop
[3] Setting the forced stop
[4] How to check the forced stop
[5] Precautions during control

[1] Control details

When "[Pr.82] Forced stop valid/invalid selection" is set to other than "1: Invalid", the forced stop signal is sent to all axes after the forced stop input is turned on. Refer to the servo amplifier instruction manual or manual for the operation of the servo amplifier after the forced stop signal is sent.

The outline of the forced stop process is shown below.

Stop cause		Stop axis	M code ON signal after stop	Axis operation status ([Md.26]) after stopping	Stop process					
					HPR control		Major positioning control	High-level positioning control	Manual control	
					Machine HPR control	Fast HPR control			JOG/ Inching operation	Manual pulse generator operation
Forced stop	"Forced stop input signal" OFF from an external device "[Cd.158] Forced stop input" OFF	All axes	No change	Servo OFF	Immediate stop					—

The following drawing shows the operation of the forced stop function.

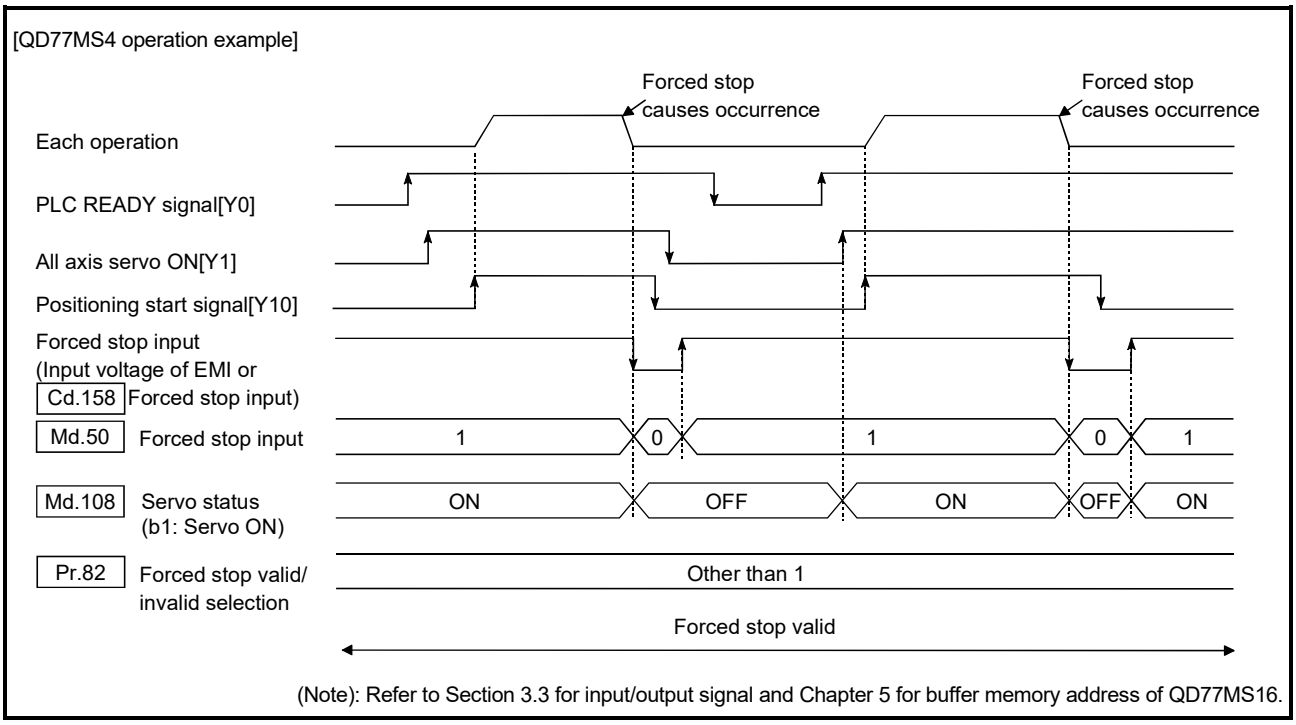

Fig. 13.18 Operation for the forced stop function

[2] Wiring the forced stop

When using the forced stop function, wire the terminals of the Simple Motion module forced stop input as shown in the following drawing. As for the 24 V DC polarity, both "+" and "-" are possible.

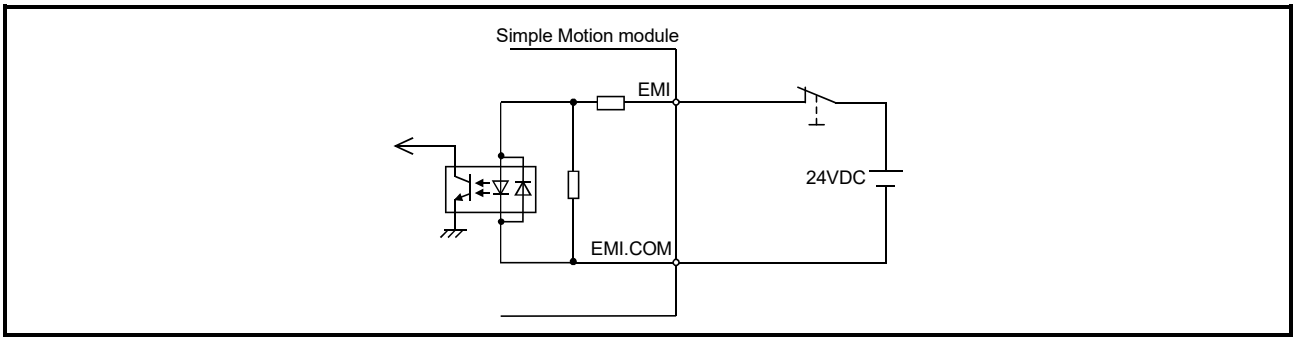

Fig. 13.19 Wiring when using the forced stop

[3] Setting the forced stop

To use the "Forced stop function", set the following data using a sequence program.

"[Pr.82] Forced stop valid/invalid selection" is validated at the rising edge (OFF → ON) of the PLC READY signal [Y0] and "[Cd.158] Forced stop input" checks in the operation cycle. "[Cd.158] Forced stop input" is validated only when "[Pr.82] Forced stop valid/invalid selection" is set to "2: Valid (Buffer memory)".

Setting item		Setting value	Setting details	Buffer memory address	
				QD77MS2 QD77MS4	QD77MS16
[Pr.82]	Forced stop valid/ invalid selection	→	Set the forced stop function. 0: Valid (External input signal) ..... Forced stop is used. 1: Invalid..... Forced stop is not used. 2: Valid (Buffer memory) ..... Forced stop is used.	35	
[Cd.158]	Forced stop input	→	Set the forced stop information to the buffer memory. 0: Forced stop ON (Forced stop) (Note-1) 1: Forced stop OFF (Forced stop release)	1945	5945

(Note-1): A value other than "1" is regarded as "0".

∗: Refer to Section 5.2.3 "Detailed parameters 1" or Section 5.7.1 "System control data" for details on the setting details.

[4] How to check the forced stop

To use the states (ON/OFF) of forced stop input, set the parameters shown in the following table.

Monitor item		Monitor value	Storage details	Buffer memory address	
				QD77MS2 QD77MS4	QD77MS16
[Md.50]	Forced stop input	→	Stores the states (ON/OFF) of forced stop input. 0: Forced stop input ON (Forced stop) 1: Forced stop input OFF (Forced stop release)	1431	4231

∗: Refer to Section 5.6.1 "System monitor data" for details on the storage details.

[5] Precautions during control

(1) After the "Forced stop input" is released, the servo ON/OFF is valid for the status of all axis servo ON [Y1].

(2) If the setting value of "[Pr.82] Forced stop valid/invalid selection" is outside the range, the error "Forced stop valid/invalid setting error" (error code: 937) occurs.

(3) The "[Md.50] Forced stop input" is stored "1" by setting "[Pr.82] Forced stop valid/invalid selection" to "1: invalid".

(4) When the "Forced stop input" is turned ON during operation, the error "Servo READY signal OFF during operation" (error code: 102) does not occur.

(5) The status of the signal that is not selected in "[Pr.82] Forced stop valid/invalid selection" is ignored.

(6) The stop could be delayed up to one operation cycle compared to the forced stop by the external input signal, because "[Cd.158] Forced stop input" is checked in operation cycle.

13.5 Functions to change the control details

Functions to change the control details include the "speed change function", "override function", "acceleration/deceleration time change function", "torque change function" and "target position change function". Each function is executed by parameter setting or sequence program creation and writing.
Refer to Section 3.2.5 "Combination of QD77MS main functions and sub functions" for combination with main function.

Both the "speed change function" or "override function" change the speed, but the differences between the functions are shown below. Use the function that corresponds to the application.

"Speed change function"
- The speed is changed at any time, only in the control being executed.
- The new speed is directly set.

"Override function"
- The speed is changed for all control to be executed.
- The new speed is set as a percent (%) of the command speed.

POINT
"Speed change function" and "Override function" cannot be used in the manual pulse generator operation and speed-torque control.

13.5.1 Speed change function

The speed control function is used to change the speed during control to a newly designated speed at any time.
The new speed is directly set in the buffer memory, and the speed is changed by a speed change command ([Cd.15] Speed change request) or external command signal.
During the machine HPR, a speed change to the creep speed cannot be carried out after deceleration start because the proximity dog ON is detected. When the speed change function is enabled and the speed is slower than the creep speed, the speed change is disabled and the speed accelerates to the creep speed after the proximity dog ON is detected.

The details shown below explain about the "speed change function".
[1] Control details
[2] Precautions during control
[3] Setting the speed change function from the PLC CPU
[4] Setting the speed change function using an external command signal

[1] Control details

The following drawing shows the operation during a speed change.

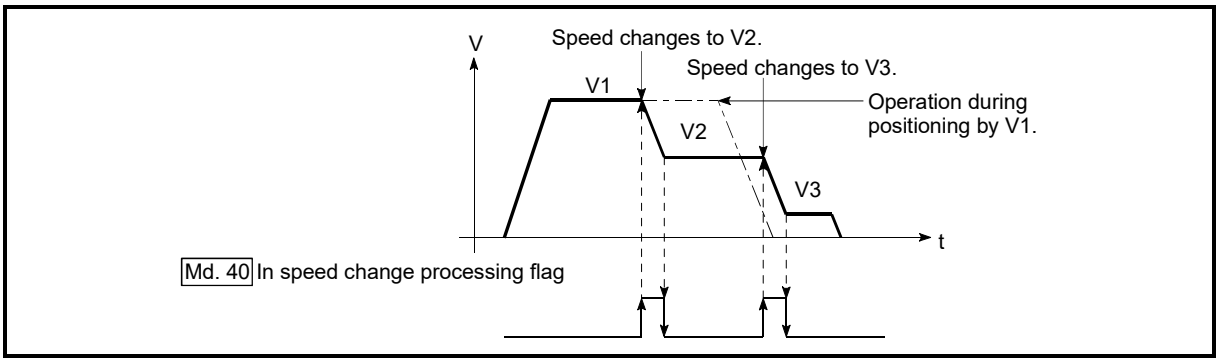

Fig. 13.20 Speed change operation

[2] Precautions during control

(1) Control is carried out as follows at the speed change during continuous path control.

a) When no speed designation (current speed) is provided in the next positioning data:
→ The next positioning data is controlled at the "[Cd.14] New speed value".

b) When a speed designation is provided in the next positioning data:
→ The next positioning data is controlled at its "[Da.8] Command speed".

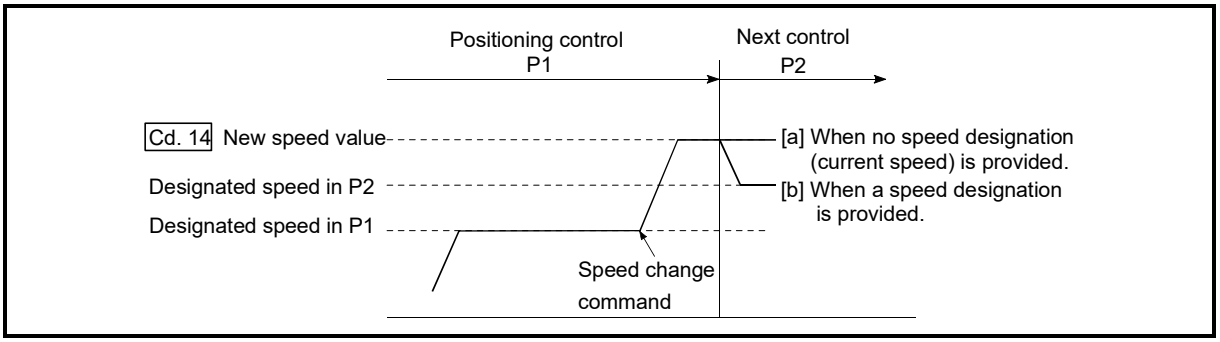

Fig. 13.21 Speed change during continuous path control

(2) When changing the speed during continuous path control, the speed change will be ignored if there is not enough distance remaining to carry out the change.

(3) When the stop command was given to make a stop after a speed change that had been made during position control, the restarting speed depends on the "[Cd.14] New speed value".

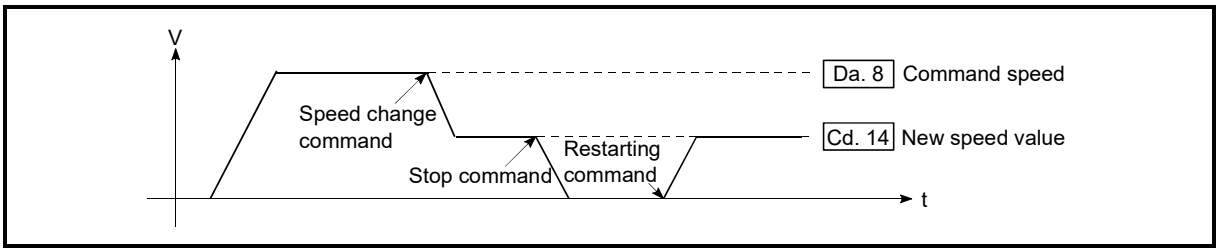

Fig. 13.22 Restarting speed after speed change made during position control

(4) When the speed is changed by setting "[Cd.14] New speed value" to "0", the operation is carried out as follows.

- When "[Cd.15] Speed change request" is turned ON, the speed change 0 flag ([Md.31] Status: b10) turns ON.
  (During interpolation control, the speed change 0 flag on the reference axis side turns ON.)
- The axis stops, but "[Md.26] Axis operation status" does not change, and the BUSY signal remains ON. (If a stop signal is input, the BUSY signal will turn OFF, and "[Md.26] Axis operation status" will change to "stopped".)

In this case, setting the "[Cd.14] New speed value" to a value besides "0" will turn OFF the speed change 0 flag ([Md.31] Status: b10), and enable continued operation.

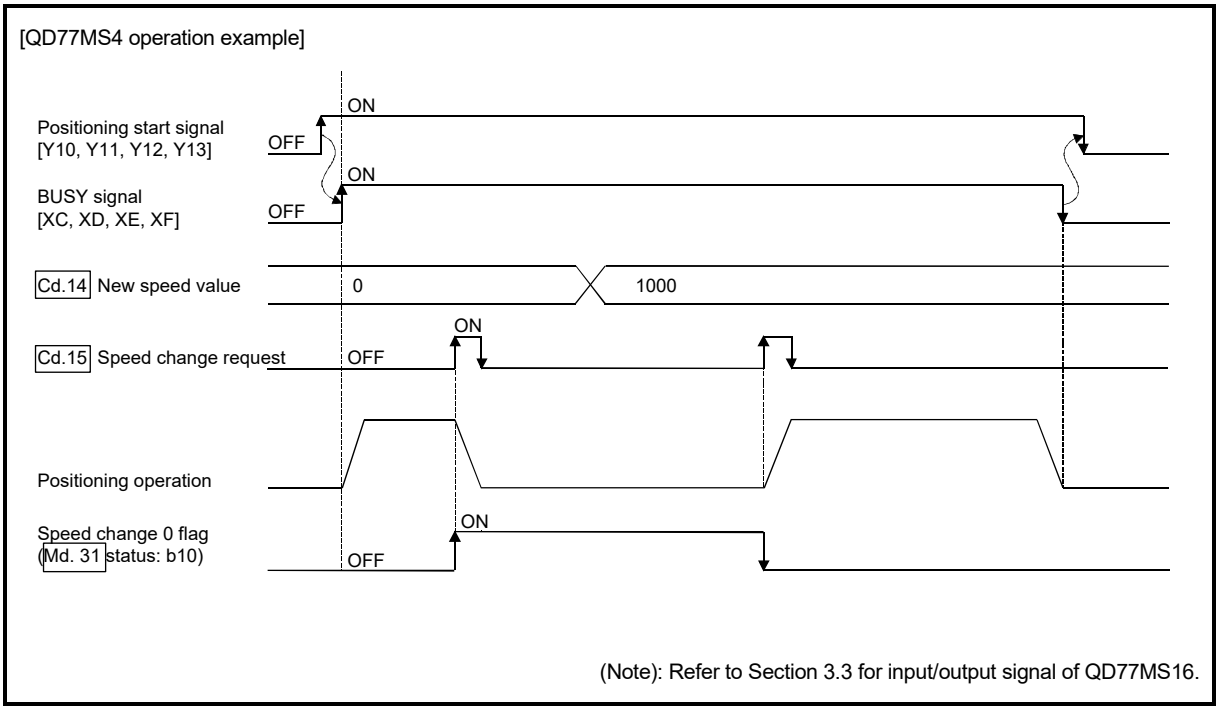

Fig. 13.23 Speed change at new speed value "0"

(5) The warning "Deceleration/stop speed change" (warning code: 500) occurs and the speed cannot be changed in the following cases.
- During deceleration by a stop command
- During automatic deceleration during positioning control

(6) The warning "Speed limit value over" (warning code: 501) occurs and the speed is controlled at the "[Pr.8] Speed limit value" when the value set in "[Cd.14] New speed value" is larger than the "[Pr.8] Speed limit value".

(7) When the speed is changed during interpolation control, the required speed is set in the reference axis.

(8) When carrying out consecutive speed changes, be sure there is an interval between the speed changes of 100ms or more.
(If the interval between speed changes is short, the Simple Motion module will not be able to track, and it may become impossible to carry out commands correctly.)

(9) When a speed change is requested simultaneously for multiple axes, change the speed one by one.
Therefore, the start timing of speed change is different for each axis.

(10) Speed change cannot be carried out during the machine HPR. A request for speed change is ignored.

(11) When deceleration is started by the speed change function, the deceleration start flag does not turn ON.

(12) The speed change function cannot be used during speed control mode, torque control mode or continuous operation to torque control mode.
Refer to Section 12.1 "Speed-torque control" for the speed change during speed control mode or continuous operation to torque control mode.

[3] Setting the speed change function from the PLC CPU

The following shows the data settings and sequence program example for changing the control speed of axis 1 from the PLC CPU. (In this example, the control speed is changed to "20.00mm/min".)

(1) Set the following data.
(Use the speed change time chart shown in section (2) below as a reference, and set using the sequence program shown in section (3).)

Setting item		Setting value	Setting details	Buffer memory address	
				QD77MS2 QD77MS4	QD77MS16
[Cd.14]	New speed value	2000	Set the new speed.	1514+100n 1515+100n	4314+100n 4315+100n
[Cd.15]	Speed change request	1	Set "1: Change the speed".	1516+100n	4316+100n

n: Axis No.-1

*: Refer to Section 5.7 "List of control data" for details on the setting details.

(2) The following shows the speed change time chart.

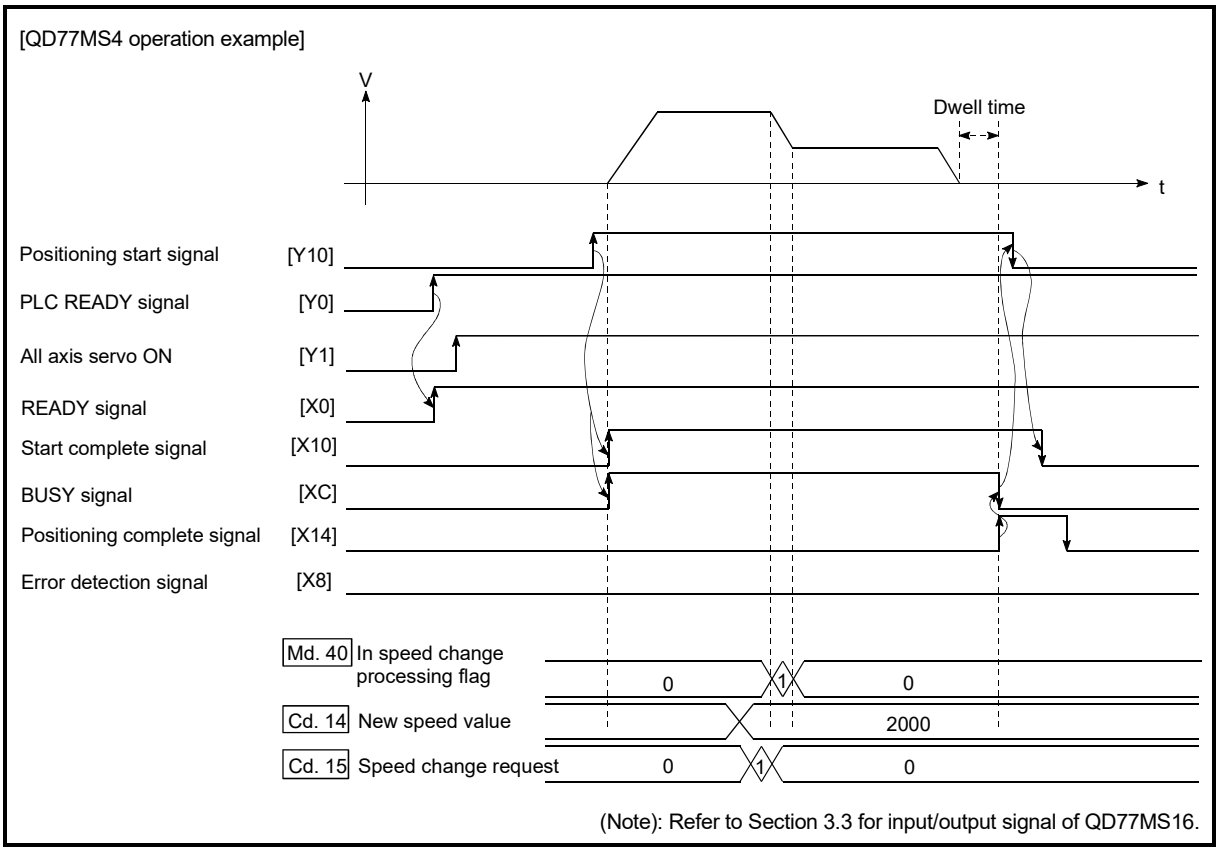

Fig. 13.24 Time chart for changing the speed from the PLC CPU

(3) Add the following sequence program to the control program, and write it to the PLC CPU.

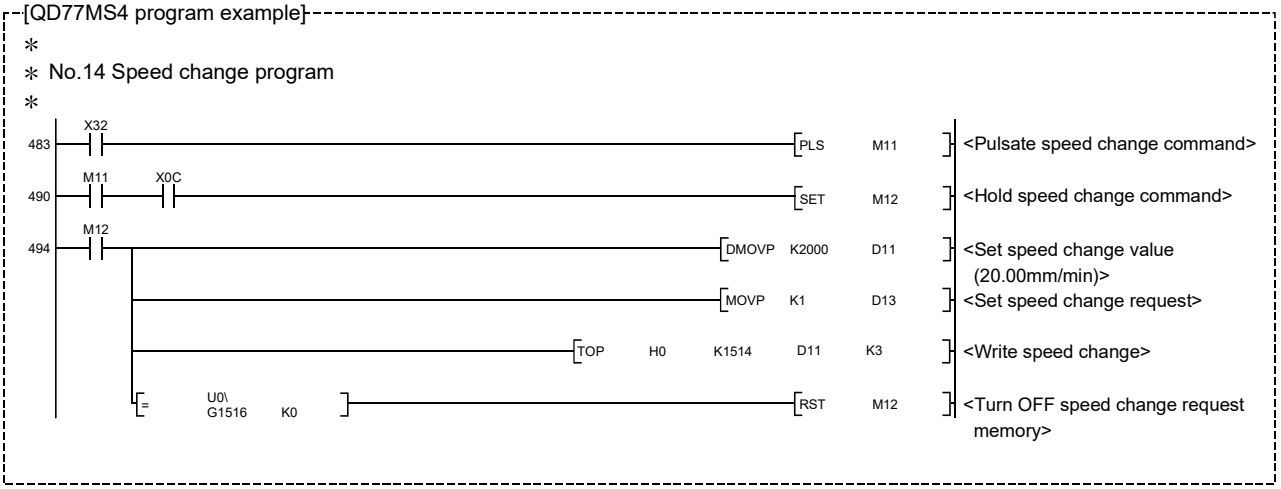

[4] Setting the speed change function using an external command signal

The speed can also be changed using an "external command signal".
The following shows the data settings and sequence program example for changing the control speed of axis 1 using an "external command signal". (In this example, the control speed is changed to "10000.00mm/min".)

(1) Set the following data to change the speed using an external command signal.
(Use the speed change time chart shown in section (2) below as a reference, and set using the sequence program shown in section (3).)

Setting item		Setting value	Setting details	Buffer memory address	
				QD77MS2 QD77MS4	QD77MS16
[Pr.42]	External command function selection	1	Set "1: External speed change request".	62+150n	
[Cd.8]	External command valid	1	Set "1: Validate the external command".	1505+100n	4305+100n
[Cd.14]	New speed value	1000000	Set the new speed.	1514+100n 1515+100n	4314+100n 4315+100n

n: Axis No.-1

*: Set the external command signal (D1) in "[Pr.95] External command signal selection" at QD77MS16 use.
Refer to Section 5.2 "List of parameters" and Section 5.7 "List of control data" for details on the setting details.

(2) The following shows the speed change time chart.

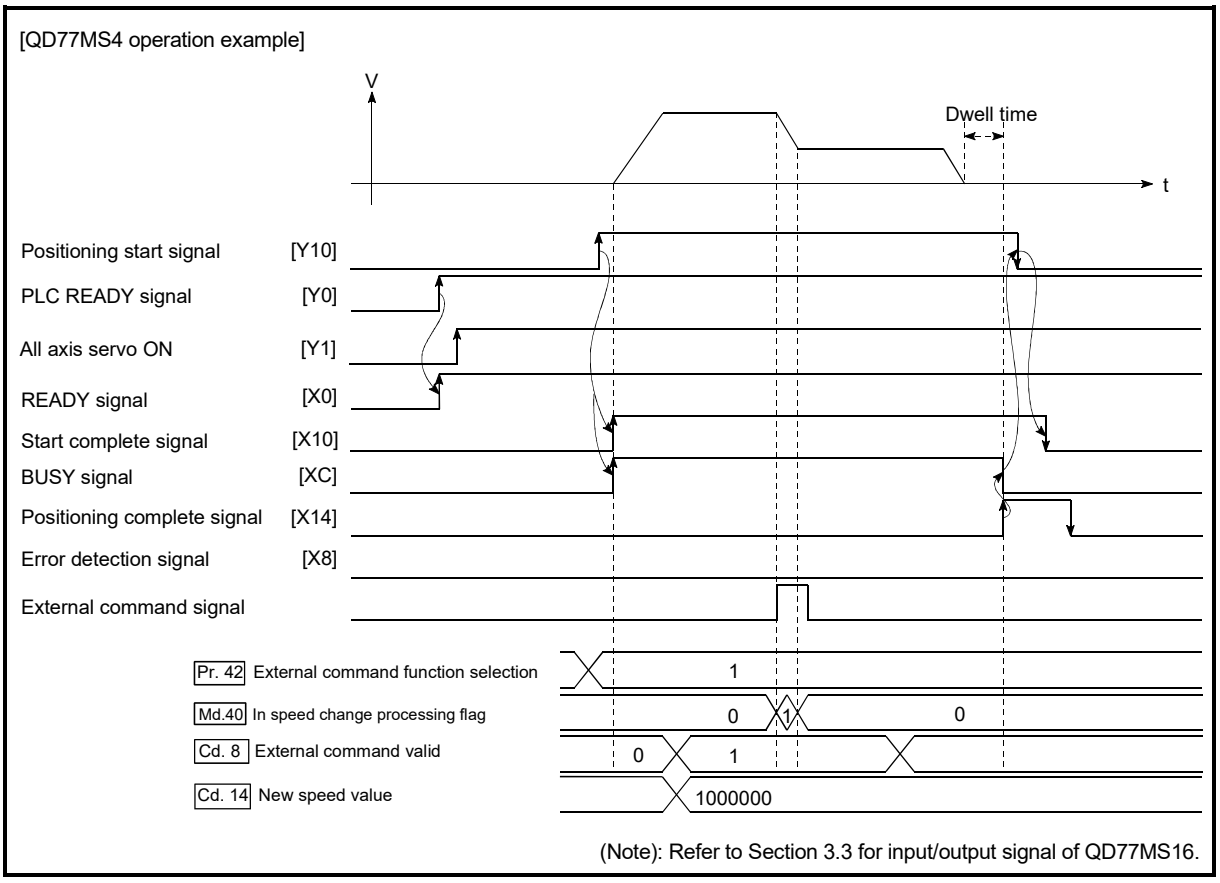

Fig. 13.25 Time chart for changing the speed using an external command signal

(3) Add the following sequence program to the control program, and write it to the PLC CPU.

[QD77MS4 program example]

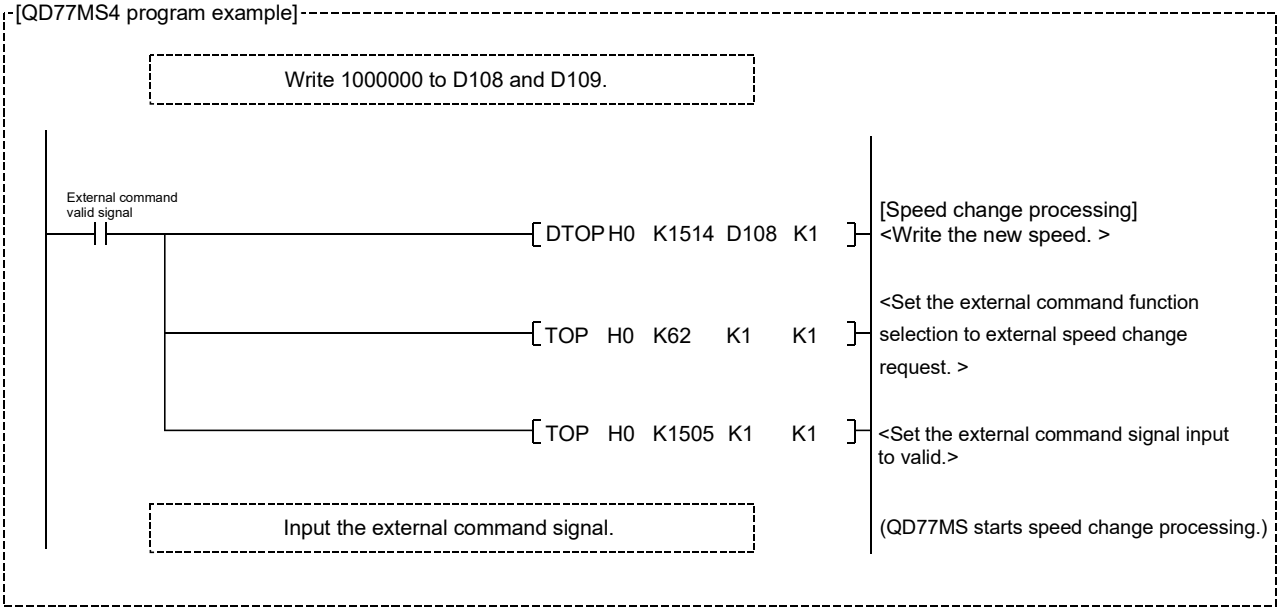

13.5.2 Override function

The override function changes the command speed by a designated percentage (1 to 300%) for all control to be executed.
The speed can be changed by setting the percentage (%) by which the speed is changed in "[Cd.13] Positioning operation speed override".

[1] Control details
[2] Precautions during control
[3] Setting the override function

[1] Control details

The following shows that operation of the override function.

1) A value changed by the override function is monitored by "[Md.22] Speed command".
2) If "[Cd.13] Positioning operation speed override" is set to 100%, the speed will not change.
3) If "[Cd.13] Positioning operation speed override" is set with a value less than "100 (%)" and "[Md.22] Speed command" is less than "1", the warning "Less than minimum speed" (warning code: 110) occurs and "[Md.22] Speed command" is set with "1" in any speed unit.
4) If there is not enough remaining distance to change the speed due to the "override function", when the speed is changed during the position control of speed-position switching control or position-speed switching control, the operation will be carried out at the speed that could be changed.
5) If the speed changed by the override function is greater than the "[Pr.8] Speed limit value", the warning "Speed limit value over" (warning code: 501) will occur and the speed will be controlled at the "[Pr.8] Speed limit value". The "[Md.39] In speed limit flag" will turn ON.

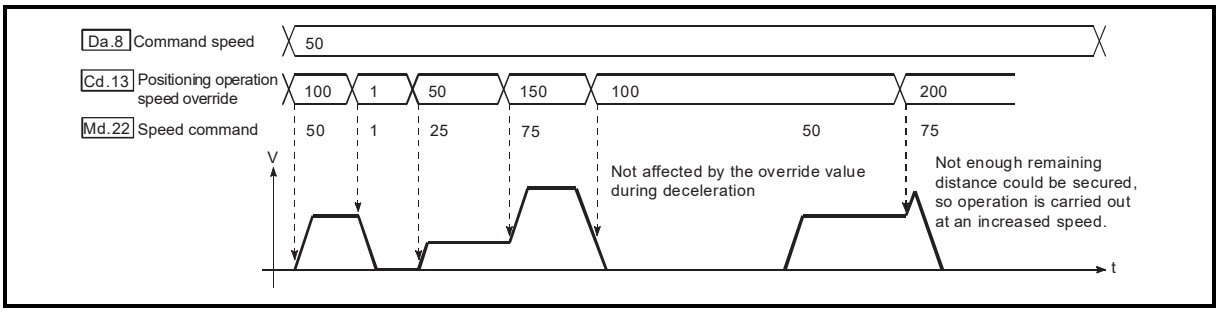

Fig. 13.26 Override function operation

[2] Precaution during control

(1) When changing the speed by the override function during continuous path control, the speed change will be ignored if there is not enough distance remaining to carry out the change.

(2) The warning "Deceleration/stop speed change" (warning code: 500) occurs and the speed cannot be changed by the override function in the following cases.
(The value set in "[Cd.13] Positioning operation speed override" is validated after a deceleration stop.)
- During deceleration by a stop command
- During automatic deceleration during positioning control

(3) When the speed is changed by the override function during interpolation control, the required speed is set in the reference axis.

(4) When carrying out consecutive speed changes by the override function, be sure there is an interval between the speed changes of 100ms or more.
(If the interval between speed changes is short, the Simple Motion module will not be able to track, and it may become impossible to carry out commands correctly.)

(5) When a machine HPR is performed, the speed change by the override function cannot be carried out after a deceleration start to the creep speed following the detection of proximity dog ON. When the override is enabled during HPR and the speed is changed, the override is disabled and the speed accelerates to the creep speed after the proximity dog ON is detected.

(6) When deceleration is started by the override function, the deceleration start flag does not turn ON.

(7) The override function cannot be used during speed control mode, torque control mode or continuous operation to torque control mode.

[3] Setting the override function

The following shows the data settings and sequence program example for setting the override value of axis 1 to "200%".

(1) Set the following data. (Use the speed change time chart shown in section (2) below as a reference, and set using the sequence program shown in section (3).)

Setting item		Setting value	Setting details	Buffer memory address	
				QD77MS2 QD77MS4	QD77MS16
[Cd.13]	Positioning operation speed override	200	Set the new speed as a percentage (%).	1513+100n	4313+100n

n: Axis No.-1

*: Refer to Section 5.7 "List of control data" for details on the setting details.

(2) The following shows a time chart for changing the speed using the override function.

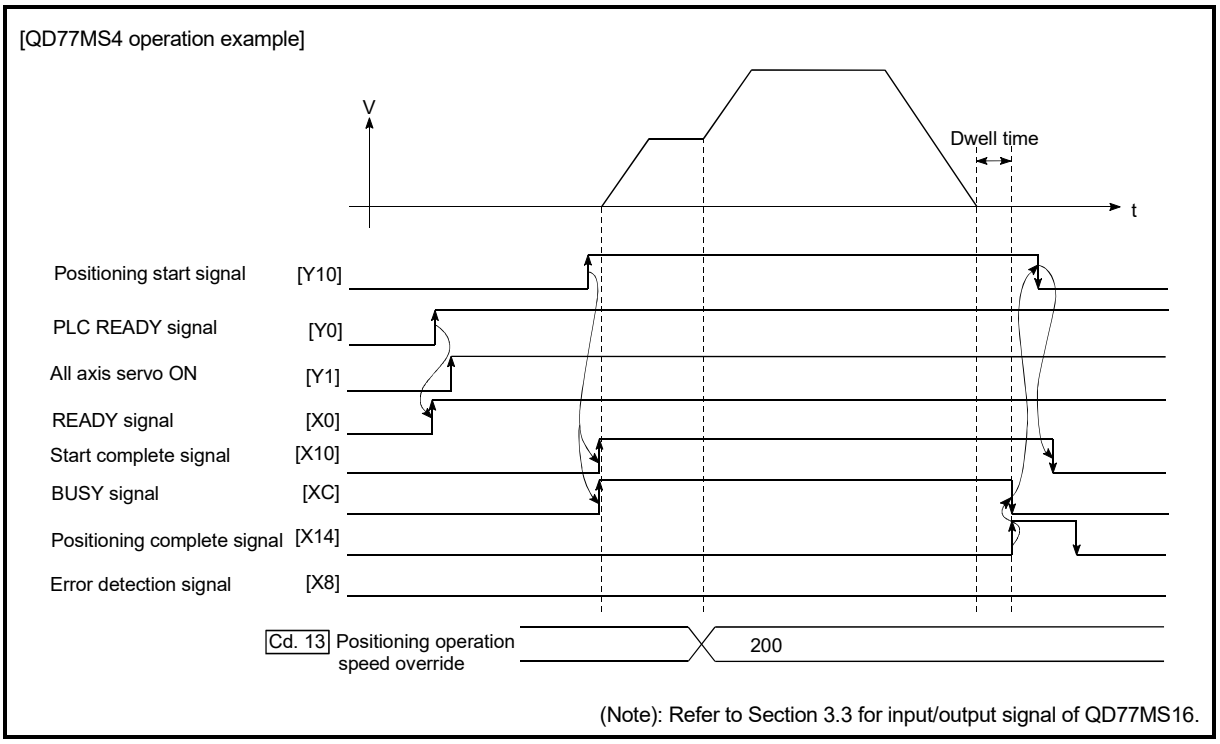

Fig.13.27 Time chart for changing the speed using the override function

(3) Add the following sequence program to the control program, and write it to the PLC CPU.

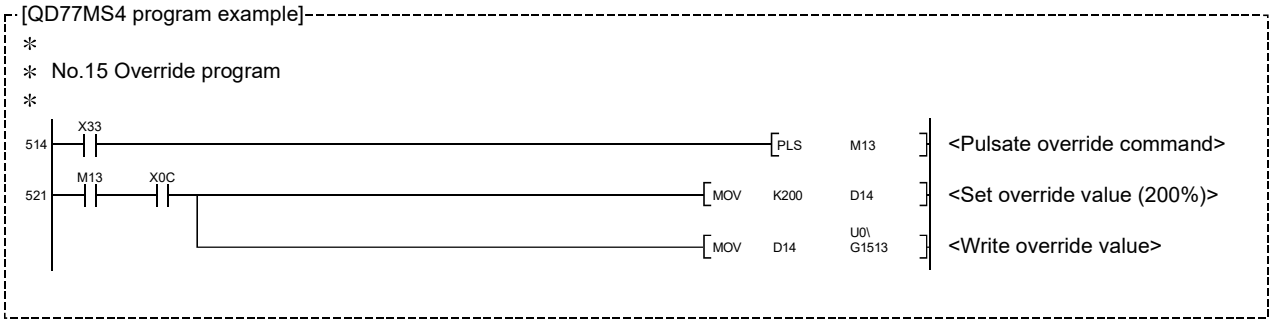

13.5.3 Acceleration/deceleration time change function

The "acceleration/deceleration time change function" is used to change the acceleration/deceleration time during a speed change to a random value when carrying out the speed change by the "speed change function" and "override function". In a normal speed change (when the acceleration/deceleration time is not changed), the acceleration/deceleration time previously set in the parameters ([Pr.9], [Pr.10], and [Pr.25] to [Pr.30] values) is set in the positioning parameter data items [Da.3] and [Da.4], and control is carried out with that acceleration/deceleration time. However, by setting the new acceleration/deceleration time ([Cd.10], [Cd.11]) in the control data, and issuing an acceleration/deceleration time change enable command ([Cd.12] Acceleration/deceleration time change value during speed change, enable/disable) to change the speed when the acceleration/deceleration time change is enabled, the speed will be changed with the new acceleration/deceleration time ([Cd.10], [Cd.11]).

The details shown below explain about the "acceleration/deceleration time change function".

[1] Control details
[2] Precautions during control
[3] Setting the acceleration/deceleration time change function

[1] Control details

After setting the following two items, carry out the speed change to change the acceleration/deceleration time during the speed change.

- Set change value of the acceleration/deceleration time ("[Cd.10] New acceleration time value", "[Cd.11] New deceleration time value")
- Setting acceleration/deceleration time change to enable ("[Cd.12] Acceleration/deceleration time change value during speed change, enable/disable")

The following drawing shows the operation during an acceleration/deceleration time change.

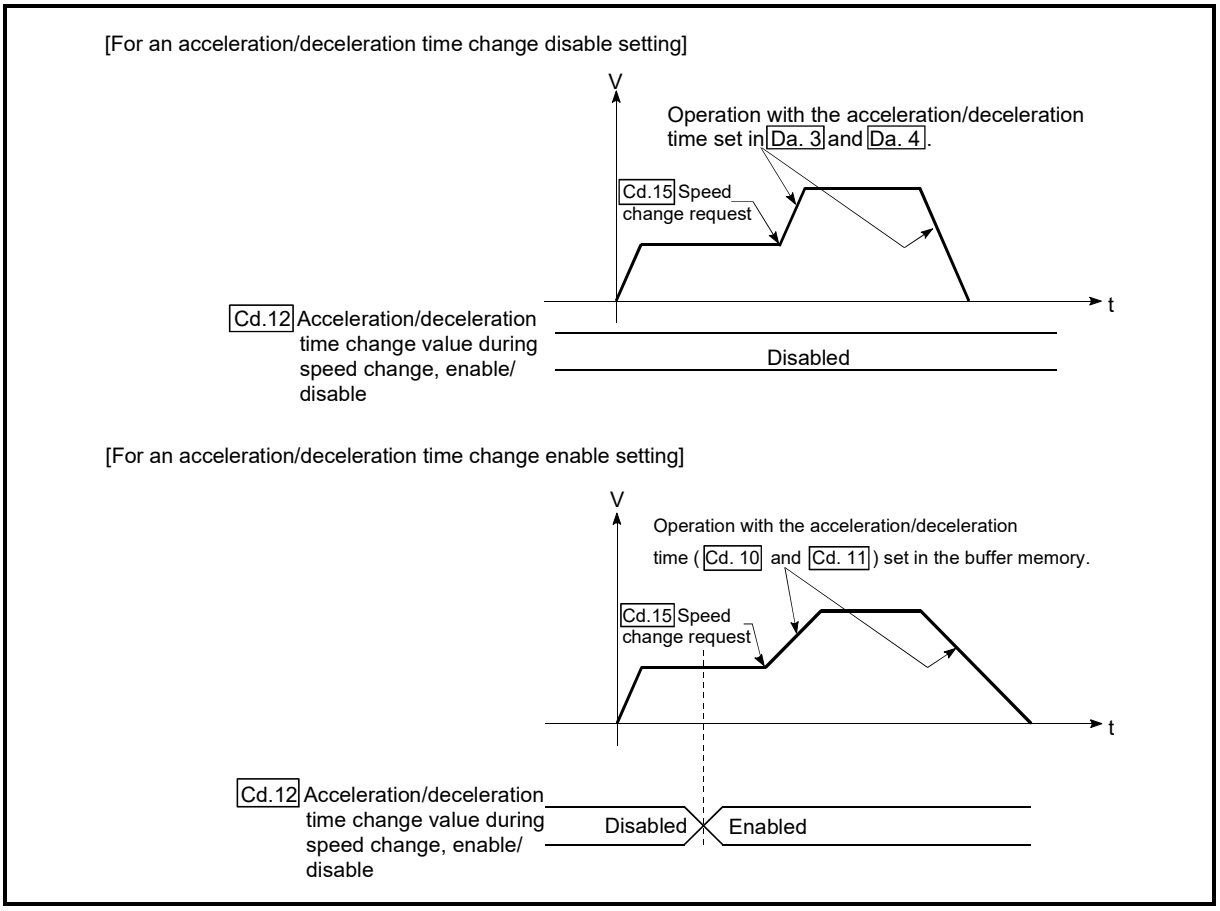

Fig. 13.28 Operation during an acceleration/deceleration time change

[2] Precautions during control

(1) When "0" is set in "[Cd.10] New acceleration time value" and "[Cd.11] New deceleration time value", the acceleration/deceleration time will not be changed even if the speed is changed. In this case, the operation will be controlled at the acceleration/deceleration time previously set in the parameters.

(2) The "new acceleration/deceleration time" is valid during execution of the positioning data for which the speed was changed. In continuous positioning control and continuous path control, the speed is changed and control is carried out with the previously set acceleration/deceleration time at the changeover to the next positioning data, even if the acceleration/ deceleration time is changed to the "new acceleration/deceleration time ([Cd.10], [Cd.11])".

(3) Even if the acceleration/deceleration time change is set to disable after the "new acceleration/deceleration time" is validated, the positioning data for which the "new acceleration/deceleration time" was validated will continue to be controlled with that value. (The next positioning data will be controlled with the previously set acceleration/deceleration time.)

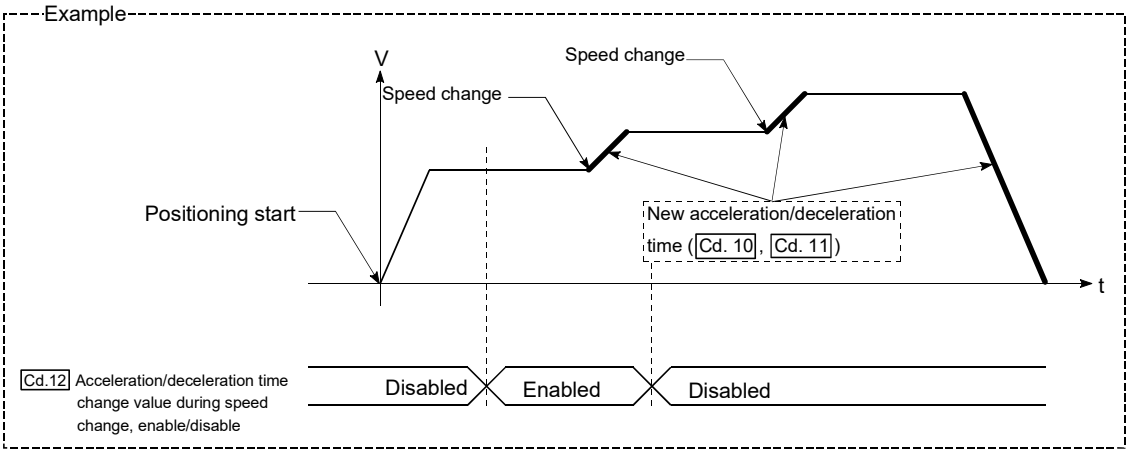

(4) If the "new acceleration/deceleration time" is set to "0" and the speed is changed after the "new acceleration/deceleration time" is validated, the operation will be controlled with the previous "new acceleration/deceleration time".

Example

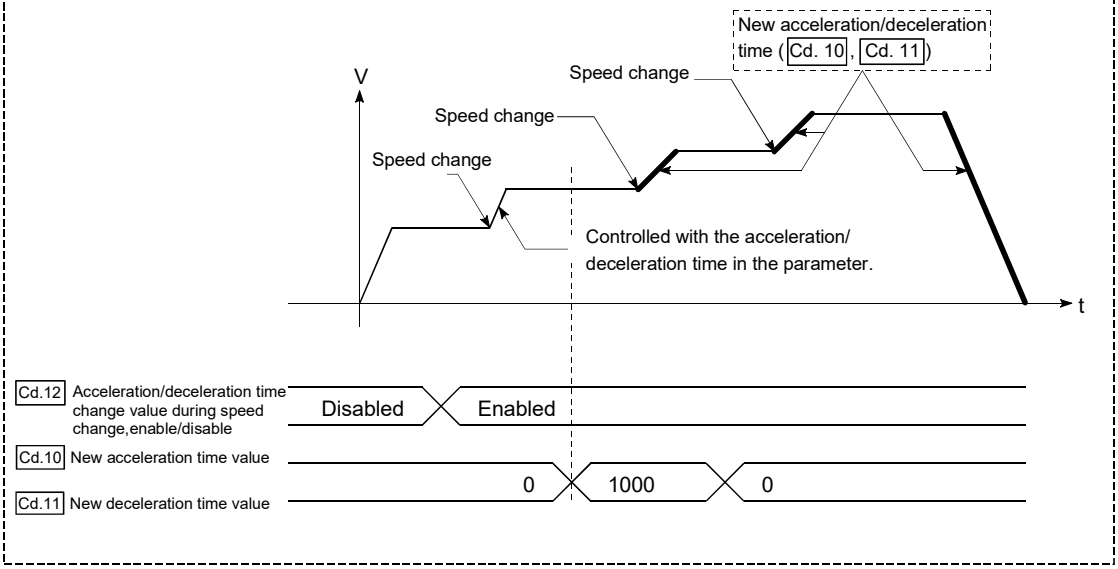

(5) The acceleration/deceleration change function cannot be used during speed control mode, torque control mode or continuous operation to torque control mode.
Refer to Section 12.1 "Speed-torque control" for the acceleration/deceleration processing during speed control mode or continuous operation to torque control mode.

POINT

If the speed is changed when an acceleration/deceleration change is enabled, the "new acceleration/deceleration time" will become the acceleration/deceleration time of the positioning data being executed. The "new acceleration/deceleration time" remains valid until the changeover to the next positioning data. (The automatic deceleration processing at the completion of the positioning will also be controlled by the "new acceleration/deceleration time".)

[3] Setting the acceleration/deceleration time change function

To use the "acceleration/deceleration time change function", write the data shown in the following table to the Simple Motion module using the sequence program.

The set details are validated when a speed change is executed after the details are written to the Simple Motion module.

Setting item		Setting value	Setting details	Buffer memory address	
				QD77MS2 QD77MS4	QD77MS16
[Cd.10]	New acceleration time value	→	Set the new acceleration time.	1508+100n 1509+100n	4308+100n 4309+100n
[Cd.11]	New deceleration time value	→	Set the new deceleration time.	1510+100n 1511+100n	4310+100n 4311+100n
[Cd.12]	Acceleration/ deceleration time change value during speed change, enable/disable	1	Set "1: Acceleration/deceleration time change enable".	1512+100n	4312+100n

n: Axis No.-1

*: Refer to Section 5.7 "List of control data" for details on the setting details.

[QD77MS4 program example]

```
*
* No.16 Acceleration/deceleration time change program
*
```

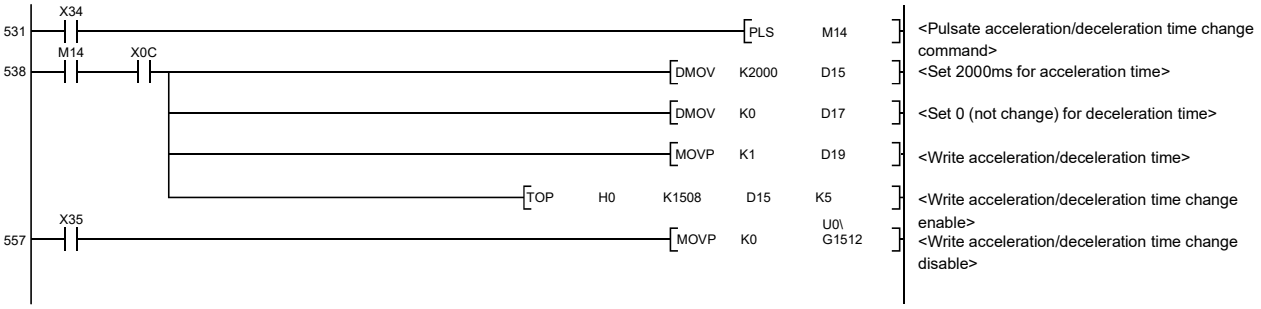

13.5.4 Torque change function

The "torque change function" is used to change the torque limit value during torque limiting.
The torque limit value at the control start is the value set in the "[Pr.17] Torque limit setting value" or "[Cd.101] Torque output setting value".

The following two change methods in the torque change function.

Torque change function	Details
Forward/reverse torque limit value same setting	The forward torque limit value and reverse torque limit value are changed to the same value by the new torque value. (Use this method when they need not be separately set.)
Forward/reverse torque limit value individual setting	The forward torque limit value and reverse torque limit value are individually changed respectively by the forward new torque value and new reverse torque value.

*: Forward torque limit value: The limit value to the generated torque during CW regeneration at the CCW driving of the servo motor.
Reverse torque limit value: The limit value to the generated torque during CCW regeneration at the CW driving of the servo motor.

Set previously "same setting" or "individual setting" of the forward/reverse torque limit value in "[Cd.112] Torque change function switching request". Set the new torque value (forward new torque value/new reverse torque value) in the axis control data ([Cd.22] and [Cd.113]) shown below.

Torque change function	Setting items		
	Torque change function switching request ([Cd.112])	New torque value ([Cd.22], [Cd.113])	
Forward/reverse torque limit value same setting	0: Forward/reverse torque limit value same setting	[Cd.22]	New torque value/ forward new torque value
		[Cd.113]	Setting invalid
Forward/reverse torque limit value individual setting	1: Forward/reverse torque limit value individual setting	[Cd.22]	New torque value/ forward new torque value
		[Cd.113]	New reverse torque value

The details shown below explain about the "torque change function".
[1] Control details
[2] Precautions during control
[3] Setting the torque change function start signal

[1] Control details

The torque value (forward new torque value/new reverse torque value) of the axis control data can be changed at all times. The torque can be limited with a new torque value from the time the new torque value has been written to the Simple Motion module.

Note that the delay time until a torque control is executed is max. operation cycle after torque change value was written.

The toque limiting is not carried out from the time the power supply is turned ON to the time the PLC READY signal [Y0] is turned ON.

The new torque value ([Cd.22], [Cd.113]) is cleared to zero at the leading edge (OFF to ON) of the positioning start signal [Y10], JOG operation start, and synchronous control start.

The torque setting range is from 0 to "[Pr.17] Torque limit setting value".

(When the setting value is 0, a torque change is considered not to be carried out, and it becomes to the value set in "[Pr.17] Torque limit setting value" or "[Cd.101] Torque output setting value". The torque change range is 1 to "[Pr.17] Torque limit setting value".)

The following drawing shows the operation at the same setting (Figure 13.29) and the operation at the individual setting (Figure 13.30) for the forward new torque value and new reverse torque value.

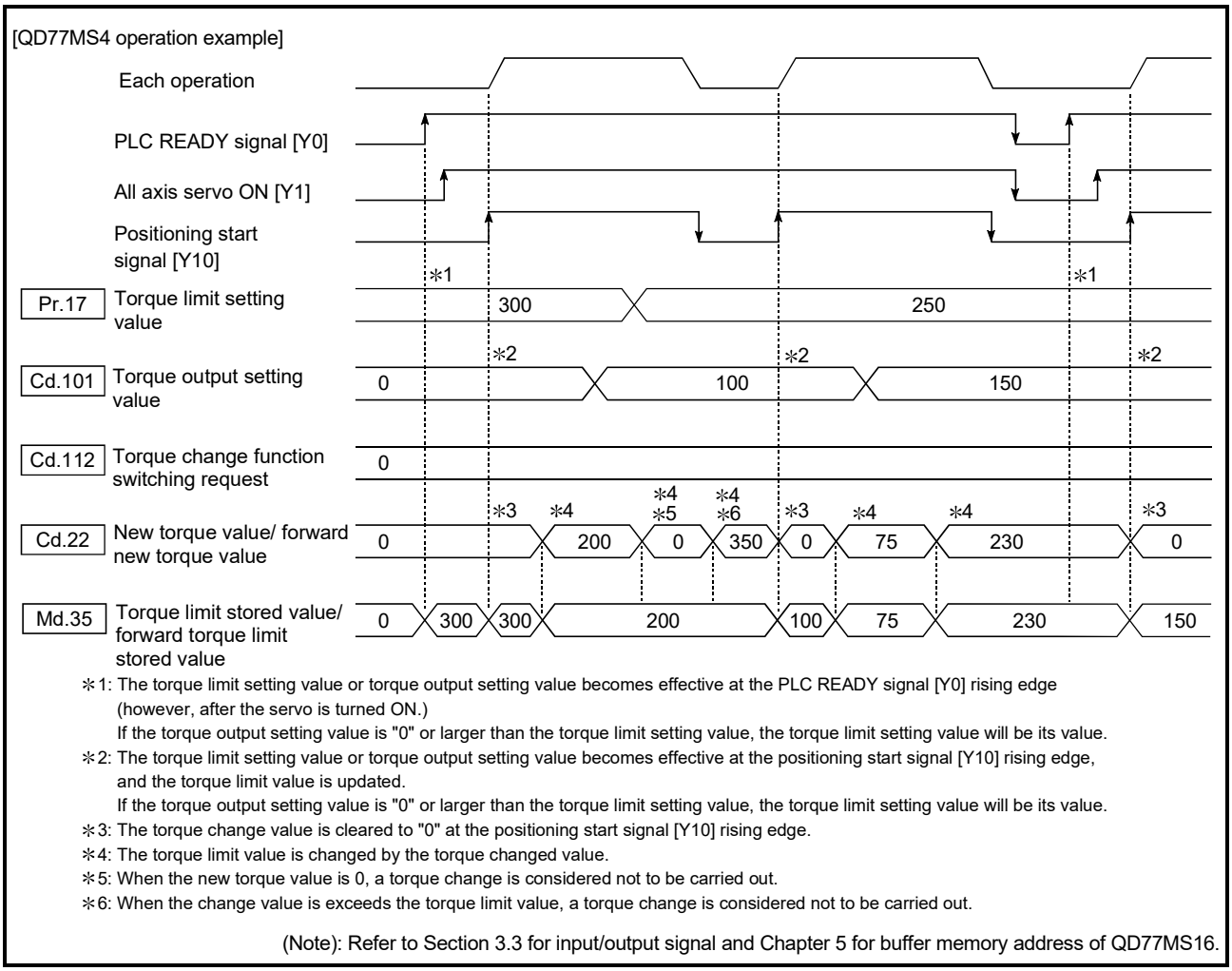

Fig. 13.29 Torque change operation (forward/reverse torque limit value same setting) (Axis 1)

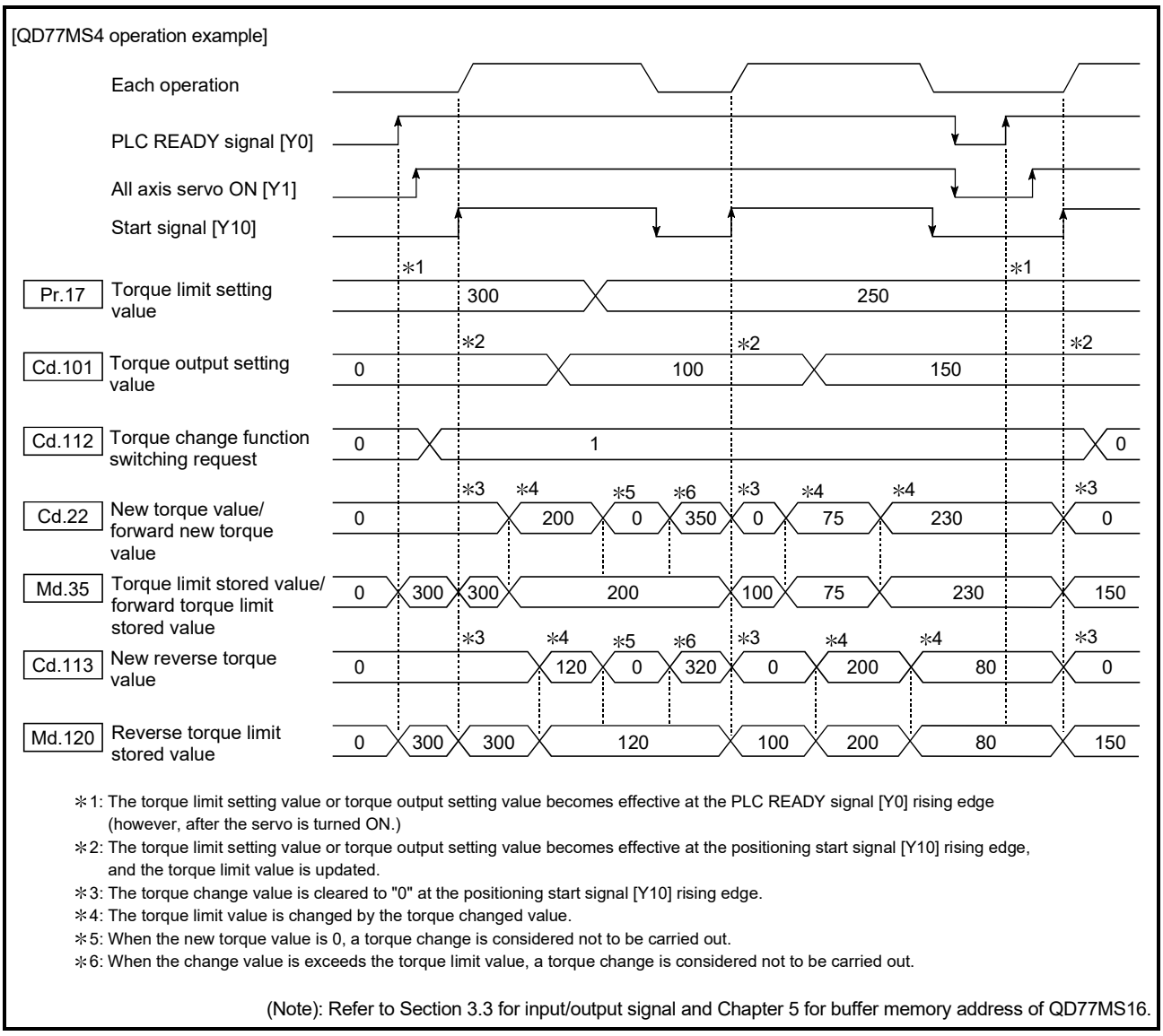

Fig. 13.30 Torque change operation (forward/reverse torque limit value individual setting) (Axis 1)

[2] Precautions during control

(1) If a value besides "0" is set in the new torque value, the torque generated by the servomotor will be limited by the setting value. To limit the torque with the value set in "[Pr.17] Torque limit setting value" or "[Cd.101] Torque output setting value", set "0" to the new torque value.

Setting value of "[Cd.112] Torque change function switching request"	Setting item (New Torque value)
0: Forward/reverse torque limit value same setting	[Cd.22] New torque value/forward new torque value
1: Forward/reverse torque limit value individual setting	[Cd.22] New torque value/forward new torque value
	[Cd.113] New reverse torque value

(2) The "[Cd.22] New torque value/forward new torque value" or "[Cd.113] New reverse torque value" is validated when written to the Simple Motion module. (Note that it is not validated from the time the power supply is turned ON to the time the PLC READY signal [Y0] is turned ON.)

(3) If the setting value of "[Cd.22] New torque value/forward new torque value" is outside the setting range, the warning "Outside new torque value range/outside forward new torque value range" (warning code: 113) will occur and the torque will not be changed.
If the setting value of "[Cd.113] New reverse torque value" is outside the setting range, the warning "Outside new reverse torque value range" (warning code: 115) will occur and the torque will not be changed.

(4) If the time to hold the new torque value is not more than 100ms, a torque change may not be executed.

(5) When changing from "0: Forward/reverse torque limit value same setting" to "1: Forward/reverse torque limit value individual setting" by the torque change function, set "0" or same value set in "[Cd.22] New torque value/forward new torque value" in "[Cd.113] New reverse torque value" before change.

[3] Setting the torque change function start signal

To use the "torque change function", write the data shown in the following table to the Simple Motion module using the sequence program.
The set details are validated when written to the Simple Motion module.

Setting item		Setting value	Setting details	Buffer memory address	
				QD77MS2 QD77MS4	QD77MS16
[Cd.112]	Torque change function switching request	0: Forward/ reverse torque limit value same setting 1: Forward/ reverse torque limit value individual setting	Sets "same setting/individual setting" of the forward torque limit value and reverse torque limit value. *: Set "0" normally. (When the forward torque limit value and reverse torque limit value are not divided.) *: When a value except "1" is set, it operates as "forward/reverse torque limit value same setting".	1563+100n	4363+100n
[Cd.22]	New torque value/forward new torque value	0 to [Pr.17] Torque limit setting value	When "0" is set to "[Cd.112] Torque change function switching request", a new torque limit value is set. (This value is set to the forward torque limit value and reverse torque limit value.) When "1" is set to "[Cd.112] Torque change function switching request", a new forward torque limit value is set.	1525+100n	4325+100n
[Cd.113]	New reverse torque value	0 to [Pr.17] Torque limit setting value	"1" is set in "[Cd.112] Torque change function switching request", a new reverse torque limit value is set. *: When "0" is set in "[Cd.112] Torque change function switching request", the setting value is invalid.	1564+100n	4364+100n

n: Axis No.-1

*: Refer to Section 5.7 "List of control data" for details on the setting details.

13.5.5 Target position change function

The "target position change function" is a function to change a target position to a newly designated target position at any timing during the position control (1-axis linear control). A command speed can also be changed simultaneously.
The target position and command speed changed are set directly in the buffer memory, and the target position change is executed by "[Cd.29] Target position change request flag".

The following shows the details of the "target position change function".
[1] Details of control
[2] Precaution during operation
[3] Method of setting target position change function from PLC CPU

[1] Details of control

The following charts show the details of control of the target position change function.

(a) When the address after change is positioned away from the start point more than the positioning address:

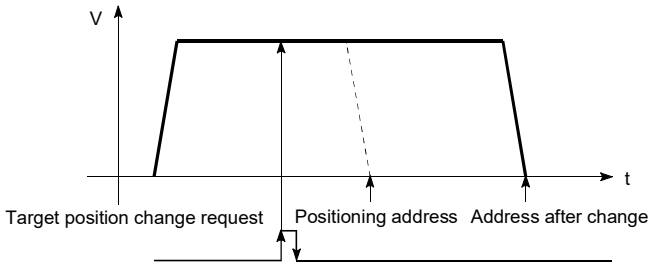

(b) When the speed is changed simultaneously with changing the address:

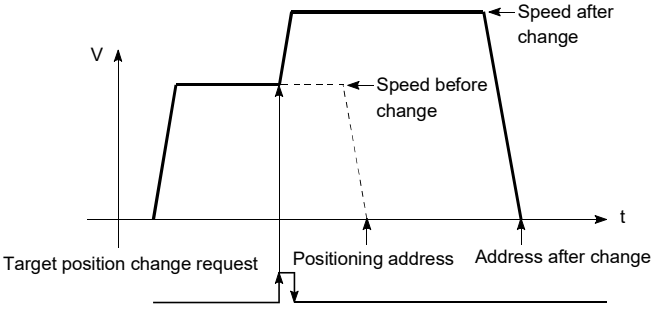

(c) When the direction of the operation is changed:

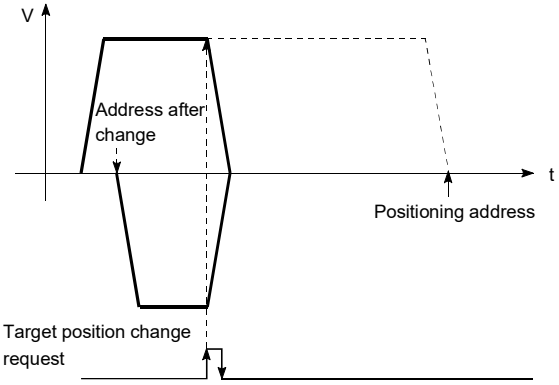

Fig. 13.31 Target position change operation

[2] Precautions during operation

(1) If the positioning movement direction from the stop position to a new target position is reversed, stop the operation once and then position to the new target position. (Refer to Fig. 13.31 (c).)

(2) If a command speed exceeding the speed limit value is set to change the command speed, the warning "Speed limit value over" (warning code: 501) will occur and the new command speed will be the speed limit value.
Also, if the command speed change disables the remaining distance to the target value from being assured, the warning "Insufficient remaining distance" will occur (warning code: 509).

(3) In the following cases, a target position change request given is ignored and the warning "Target position change not possible" (warning code: 518) occurs.
- During interpolation control
- A new target position value (address) is outside the software stroke limit range.
- The axis is decelerating to a stop by a stop cause.
- While the positioning data whose operation pattern is continuous path control is executed.
- When the speed change 0 flag ([Md.31] Status: b10) is ON.

(4) When a command speed is changed, the current speed is also changed. When the next positioning speed uses the current speed in the continuous positioning, the next positioning operation is carried out at the new speed value. When the speed is set with the next positioning data, the speed becomes the current speed and the operation is carried out at the current speed.

(5) When a target position change request is given during automatic deceleration in position control, positioning control to a new position is exercised after the axis has stopped once if the moving direction is reversed. If the moving direction is not reversed, the axis is accelerated to the command speed again and positioned to the new position.

(6) If the constant speed status is regained or the output is reversed by a target position change made while "[Md.48] Deceleration start flag" is ON, the deceleration start flag remains ON. (For details, refer to Section 13.7.8.)

(7) Carrying out the target position change to the ABS linear 1 in degrees may carry out the positioning to the new target position after the operation decelerates to stop once, even the movement direction is not reversed.

POINT

When carrying out the target position change continuously, take an interval of 100 ms or longer between the times of the target position changes. Also, take an interval of 100 ms or longer when the speed change and override is carried out after changing the target position or the target position change is carried out after the speed change and override.

[3] Method of setting target position change function from PLC CPU

The following table and chart show the example of a data setting and sequence program used to change the target position of the axis 1 by the command from the PLC CPU, respectively. (example in which the target position value and command speed are changed to a new target position of "300.0 μm" and a new command speed of "10000.00 mm/min".)

(1) The following data is set.

(Referring to the target position change time chart shown in item (2) below, carry out the setting with the sequence program shown in item (3).)

Setting item		Setting value	Setting details	Buffer memory address	
				QD77MS2 QD77MS4	QD77MS16
[Cd.27]	Target position change value (New address)	3000	Set the new address.	1534+100n 1535+100n	4334+100n 4335+100n
[Cd.28]	Target position change value (New speed)	1000000	Set the new speed.	1536+100n 1537+100n	4336+100n 4337+100n
[Cd.29]	Target position change request flag	1	Set "1: Requests a change in the target position".	1538+100n	4338+100n

n: Axis No.-1

*: Refer to Section 5.7 "List of control data" for details on the setting details.

(2) The following shows the time chart for target position change.

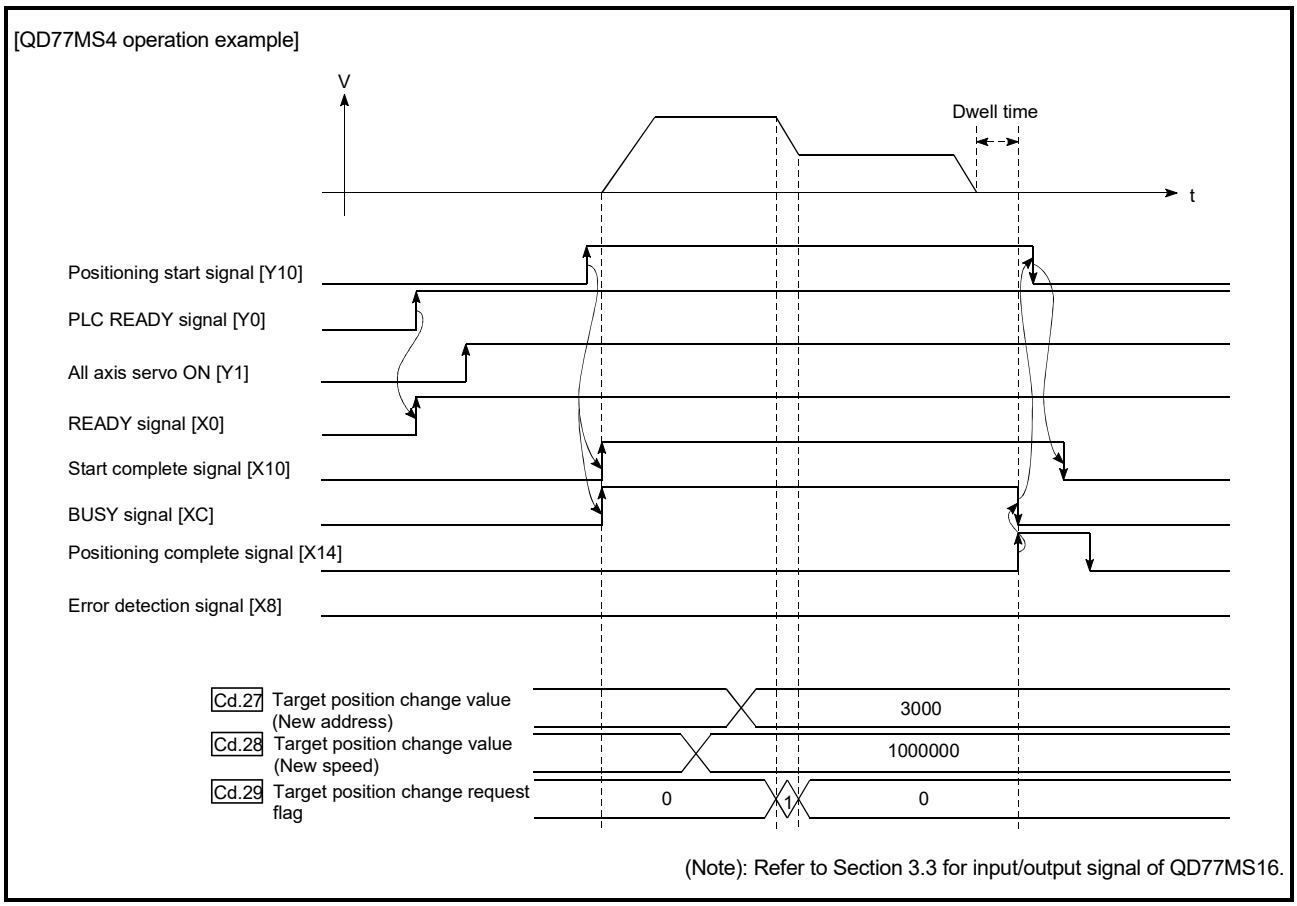

Fig. 13.32 Time chart for target position change from PLC CPU

(3) The following sequence program is added to the control program, and written to the PLC CPU.

[QD77MS4 program example]

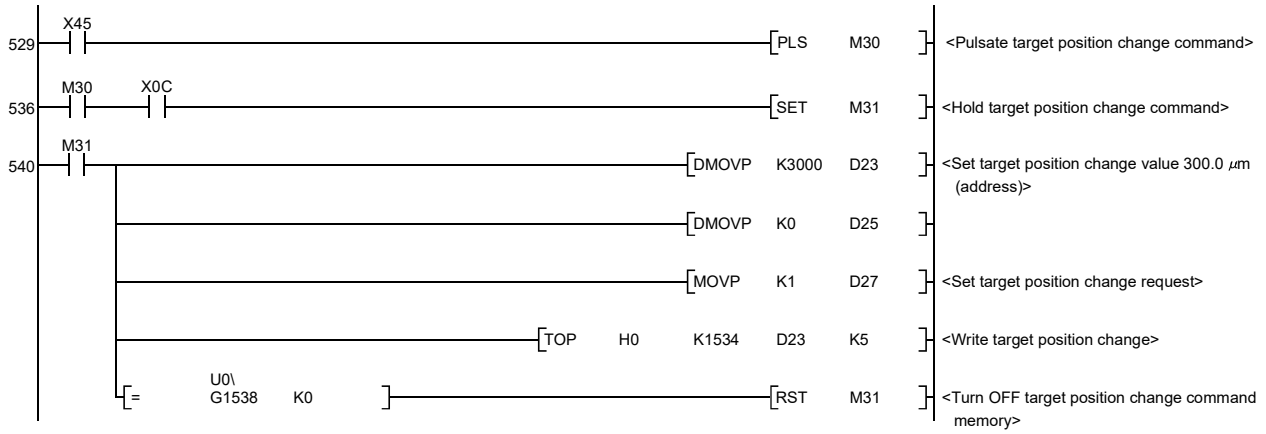

13.6 Absolute position system

The Simple Motion module can construct an absolute position system by installing the absolute position system and connecting it through SSCNETⅢ/H.
The following describes precautions when constructing the absolute position system.
The configuration of the absolute position system is shown below.

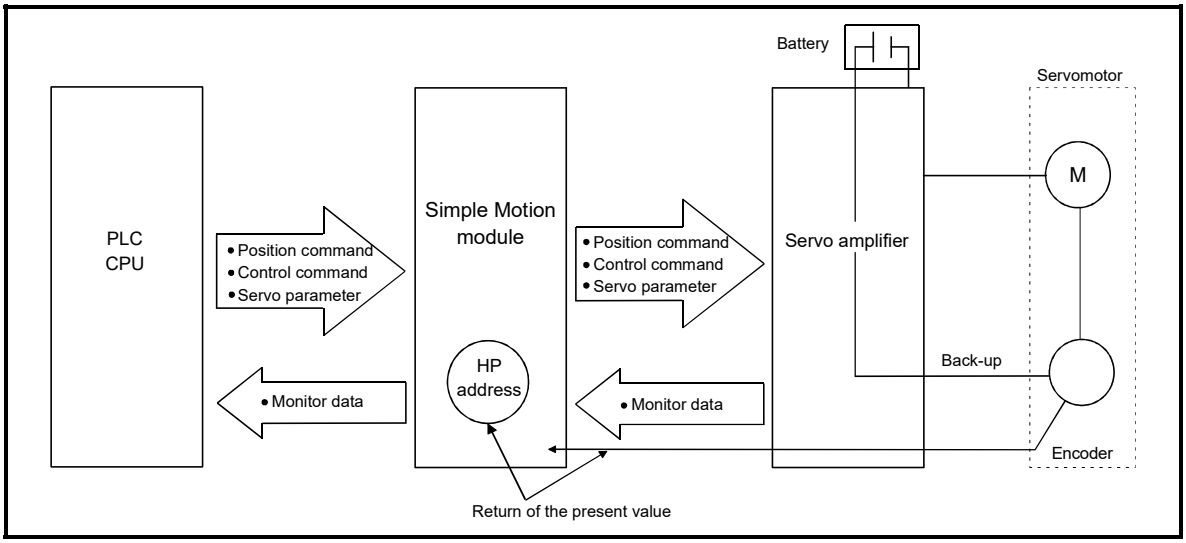

Fig. 13.33 Configuration of absolute position system

[1] Setting for absolute positions

For constructing an absolute position system, use a servo amplifier and a servomotor which enable absolute position detection.
It is also necessary to install a battery for retaining the location of the HPR in the servo amplifier. To use the absolute position system, select "1: Enabled (absolute position detection system)" in "Absolute position detection system (PA03)" in the amplifier setting for the servo parameters (basic setting).
Refer to the instruction manual or manual of each servo amplifier for details of the absolute position system.

	Buffer memory address *	
	QD77MS2/QD77MS4	QD77MS16
Absolute position detection system (PA03)	30103+200n	28403+100n

n: Axis No.-1

*: Since the servo parameters of MR-J5(W)-B are not in the buffer memory, use GX Works2 or axis control data to set them. Refer to "Appendix 6.6 Connection with MR-J5(W)-B" for details.

When connecting MR-J5(W)-B, configure the setting so that the ratio of "Electronic gear numerator (PA06)" : "Electronic gear denominator (PA07)" becomes 1 : 16.

[2] Precautionary notes

(a) When the setting unit is "degree", the absolute position system with unlimited length feed can be configured.

(b) When the setting unit is other than "degree" and the absolute position system is used, unlimited length feed is not possible.

(c) When a servo amplifier is connected in the absolute position system, the following parameters are used. If any of the following parameters needs to be changed, change it before connecting the servo amplifier. If any of the following parameters is changed after the servo amplifier is connected, the command position value and motor position may become inconsistent.

- [Pr.1] Unit setting
- [Pr.2] Number of pulses per rotation (AP)
- [Pr.3] Movement amount per rotation (AL)
- [Pr.4] Unit magnification (AM)
- [Pr.11] Backlash compensation amount

[3] HPR

In the absolute position system, an HP can be determined through HPR.
In the "Data set method" HPR method, the location to which the location of the HP is moved by manual operation (JOG operation/manual pulse generator operation) is treated as the HP.

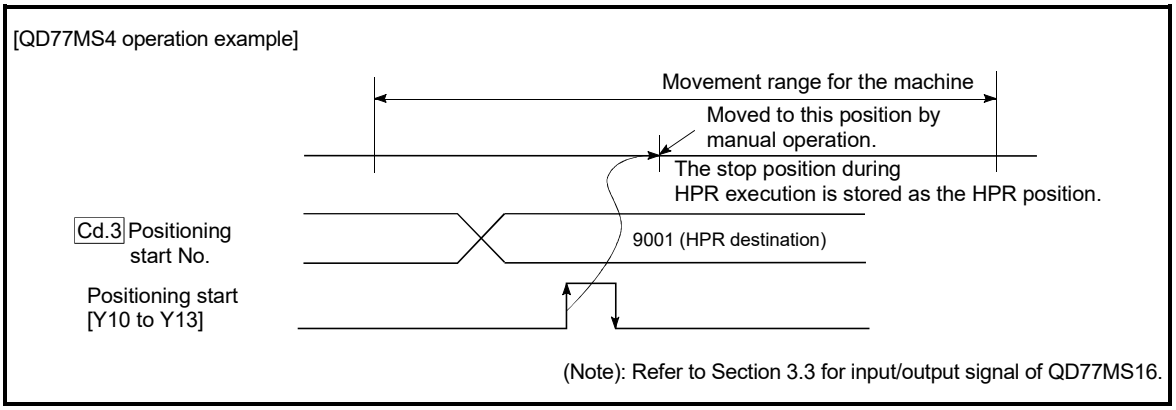

Fig. 13.34 Operation of the HPR execution

13.7 Other functions

Other functions include the "step function", "skip function", "M code output function", "teaching function", "command in-position function", "acceleration/deceleration processing function", "pre-reading start function", "deceleration start flag function", "stop command processing for deceleration stop function", "follow up processing function", "speed control 10 × multiplier setting for degree axis function" and "operation setting for incompletion of HPR function". Each function is executed by parameter setting or sequence program creation and writing.

13.7.1 Step function

The "step function" is used to confirm each operation of the positioning control one by one.
It is used in debugging work for major positioning control, etc.
A positioning operation in which a "step function" is used is called a "step operation".
In step operations, the timing for stopping the control can be set. (This is called the "step mode".) Control stopped by a step operation can be continued by setting "step continues (to continue the control)" in the "step start information".

The details shown below explain about the "step function".
[1] Relation between the step function and various controls
[2] Step mode
[3] Step start information
[4] Using the step operation
[5] Control details
[6] Precautions during control
[7] Step function settings

[1] Relation between the step function and various controls

The following table shows the relation between the "step function" and various controls.

Control type			Step function	Step applicability
HPR control	Machine HPR control		×	Step operation not possible
	Fast HPR control		×	
Major positioning control	Position control	1-axis linear control	○	Step operation possible
		2 to 4-axes linear interpolation control	○	
		1-axis fixed-feed control	○	
		2 to 4-axes fixed-feed control (interpolation)	○	
		2-axis circular interpolation control	○	
	1 to 4-axes Speed control		×	Step operation not possible
	Speed-position switching control, Position-speed switching control		○	Step operation possible
	Other control	Current value changing	○	
		JUMP instruction, NOP instruction, LOOP to LEND	×	Step operation not possible
Manual control	JOG operation, Inching operation		×	Step operation not possible
	Manual pulse generator operation		×	
Expansion control	Speed-torque control		×	

○: Set when required, ×: Setting not possible

[2] Step mode

In step operations, the timing for stopping the control can be set. This is called the "step mode". (The "step mode" is set in the control data "[Cd.34] Step mode".)

The following shows the two types of "step mode" functions.

(1) Deceleration unit step

The operation stops at positioning data requiring automatic deceleration. (A normal operation will be carried out until the positioning data requiring automatic deceleration is found. Once found, that positioning data will be executed, and the operation will then automatically decelerate and stop.)

(2) Data No. unit step

The operation automatically decelerates and stops for each positioning data. (Even in continuous path control, an automatic deceleration and stop will be forcibly carried out.)

[3] Step start information

Control stopped by a step operation can be continued by setting "step continues" (to continue the control) in the "step start information". (The "step start information" is set in the control data "[Cd.36] Step start information".)

The following table shows the results of starts using the "step start information" during step operation.

Stop status in the step operation	[Md.26] Axis operation status	[Cd.36] Step start information	Step start results
1 step of positioning stopped normally	Step standby	1: Continues step operation	The next positioning data is executed.

The warning "Step not possible" (warning code: 511) will occur if the "[Md.26] Axis operation status" is as shown below or the step valid flag is OFF when step start information is set.

[Md.26] Axis operation status	Step start results
Standby	Step not continued by warning
Stopped	
Interpolation	
JOG operation	
Manual pulse generator operation	
Analyzing	
Special start standby	
HPR	
Position control	
Speed control	
Speed control in speed-position switching control	
Position control in speed-position switching control	
Speed control in position-speed switching control	
Position control in position-speed switching control	
Synchronous control	
Control mode switch	
Speed control	
Torque control	
Continuous operation to torque control	

[4] Using the step operation

The following shows the procedure for checking positioning data using the step operation.

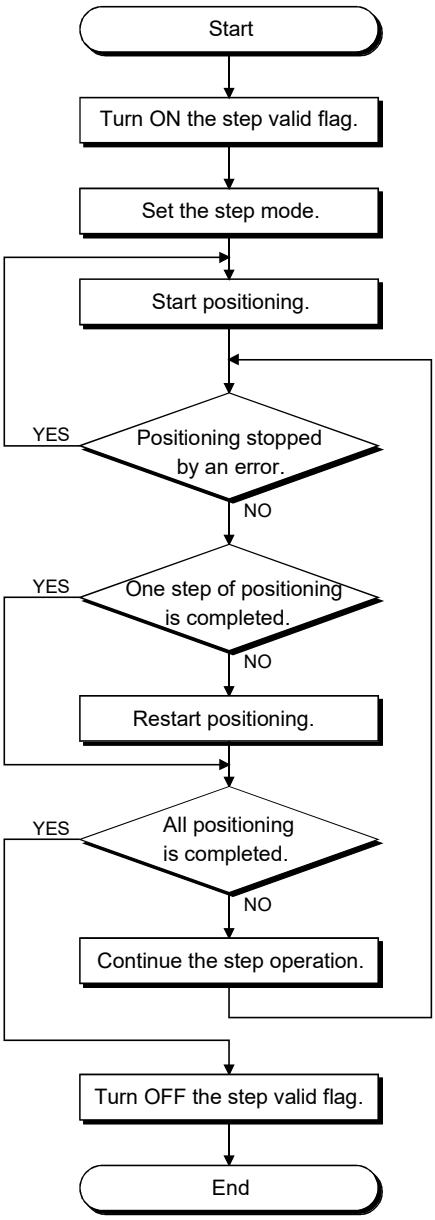

[5] Control details

(1) The following drawing shows a step operation during a "deceleration unit step".

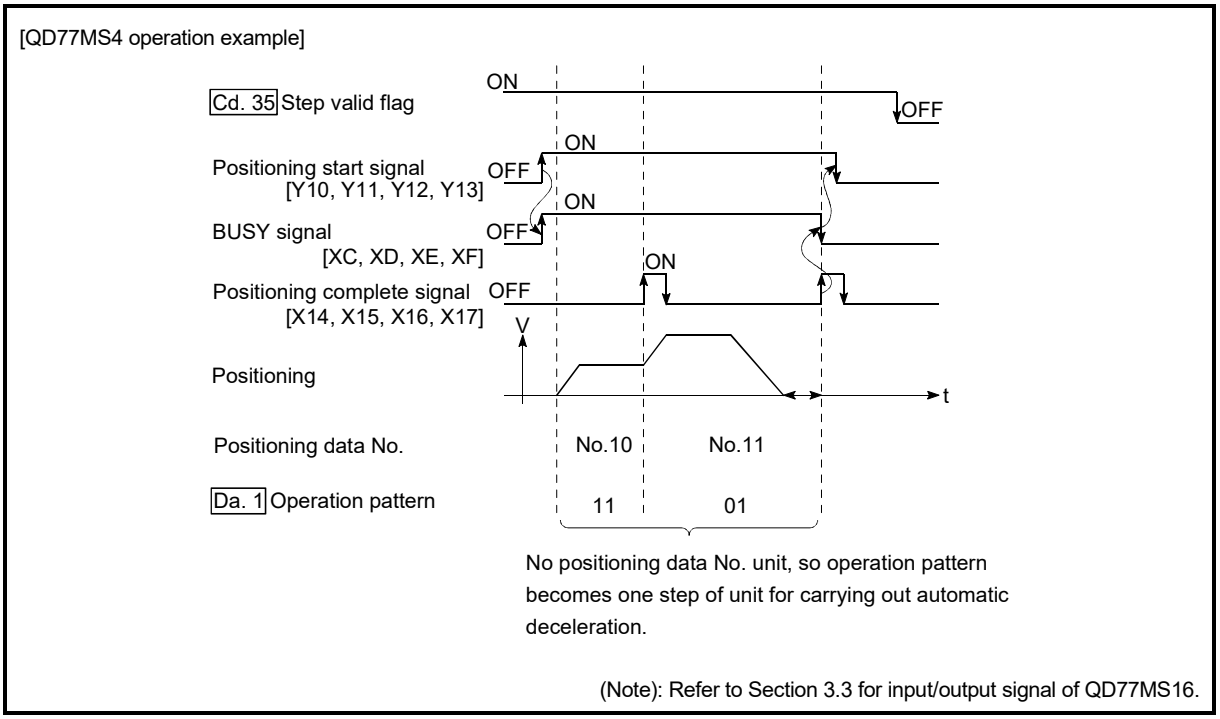

Fig. 13.35 Operation during step execution by deceleration unit step

(2) The following drawing shows a step operation during a "data No. unit step".

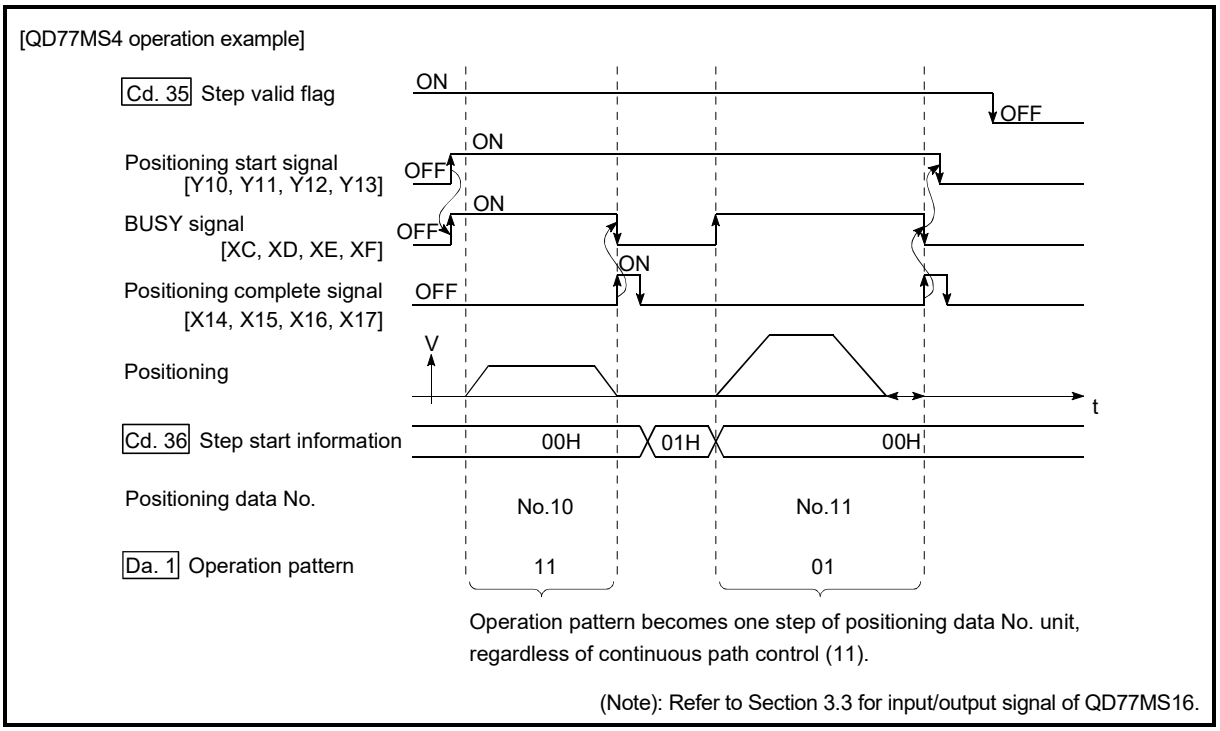

Fig. 13.36 Operation during step execution positioning data No. unit step

[6] Precautions during control

(1) When step operation is carried out using interpolation control positioning data, the step function settings are carried out for the reference axis.

(2) When the step valid flag is ON, the step operation will start from the beginning if the positioning start signal is turned ON while "[Md.26] Axis operation status" is "step standby". (The step operation will be carried out from the positioning data set in "[Cd.3] Positioning start No.".)

[7] Step function settings

To use the "step function", write the data shown in the following table to the Simple Motion module using the sequence program. Refer to section [4] "Using the step operation" for the timing of the settings.

The set details are validated when written to the Simple Motion module.

Setting item		Setting value	Setting details	Buffer memory address	
				QD77MS2 QD77MS4	QD77MS16
[Cd.34]	Step mode	→	Set "0: Stepping by deceleration units" or "1: Stepping by data No. units".	1544+100n	4344+100n
[Cd.35]	Step valid flag	1	Set "1: Validates step operations".	1545+100n	4345+100n
[Cd.36]	Step start information	→	Set "1: Continues step operation", depending on the stop status.	1546+100n	4346+100n

n: Axis No.-1

∗: Refer to Section 5.7 "List of control data" for details on the setting details.

13.7.2 Skip function

The "skip function" is used to stop (deceleration stop) the control of the positioning data being executed at the time of the skip signal input, and execute the next positioning data.
A skip is executed by a skip command ([Cd.37] Skip command) or external command signal.
The "skip function" can be used during control in which positioning data is used.

The details shown below explain about the "skip function".
[1] Relation between the skip function and various controls
[2] Control details
[3] Precautions during control
[4] Setting the skip function from the PLC CPU
[5] Setting the skip function using an external command signal

[1] Relation between the skip function and various controls

The following table shows the relation between the "skip function" and various controls.

Control type			Skip function	Skip applicability
HPR control	Machine HPR control		×	Skip operation not possible
	Fast HPR control		×	
Major positioning control	Position control	1-axis linear control	○	Skip operation possible
		2 to 4-axes linear interpolation control	○	
		1-axis fixed-feed control	○	
		2 to 4-axes fixed-feed control (interpolation)	○	
		2-axis circular interpolation control	○	
	1 to 4-axes Speed control		×	Skip operation not possible
	Speed-position switching control		○	Skip operation possible
	Position-speed switching control		×	Skip operation not possible
	Other control	Current value changing	○	Skip operation possible
		JUMP instruction, NOP instruction, LOOP to LEND	×	Skip operation not possible
Manual control	JOG operation, Inching operation		×	Skip operation not possible
	Manual pulse generator operation		×	
Expansion control	Speed-torque control		×	

○: Set when required, ×: Setting not possible

[2] Control details

The following drawing shows the skip function operation.

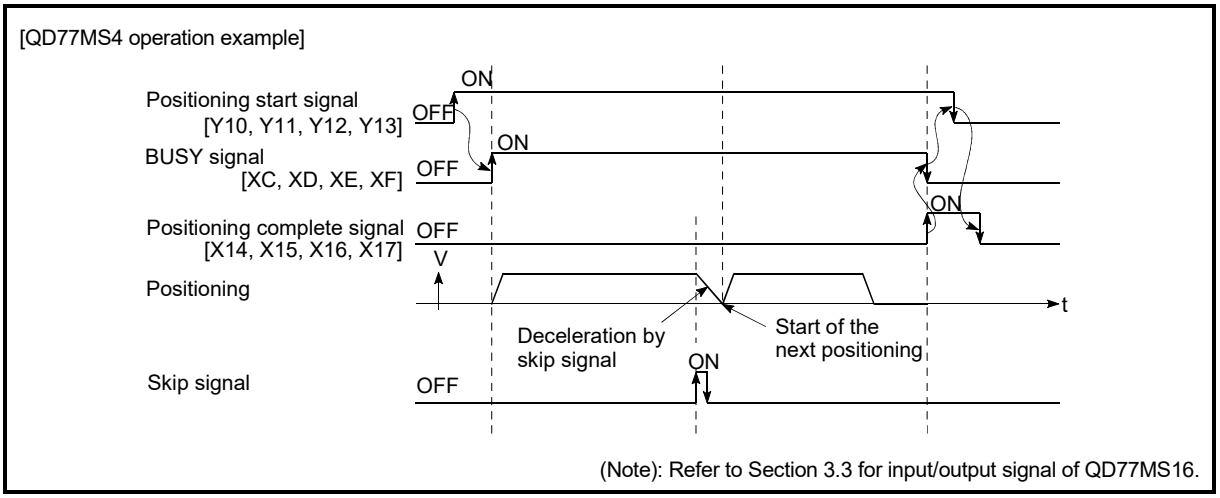

Fig. 13.37 Operation when a skip signal is input during positioning control

[3] Precautions during control

(1) If the skip signal is turned ON at the last of an operation, a deceleration stop will occur and the operation will be terminated.

(2) When a control is skipped (when the skip signal is turned ON during a control), the positioning complete signals will not turn ON.

(3) When the skip signal is turned ON during the dwell time, the remaining dwell time will be ignored, and the next positioning data will be executed.

(4) When a control is skipped during interpolation control, the reference axis skip signal is turned ON. When the reference axis skip signal is turned ON, a deceleration stop will be carried out for every axis, and the next reference axis positioning data will be executed.

(5) The M code ON signals will not turn ON when the M code output is set to the AFTER mode (when "1: AFTER mode" is set in "[Pr.18] M code ON signal output timing").
(In this case, the M code will not be stored in "[Md.25] Valid M code".)

(6) The skip cannot be carried out by the speed control and position-speed switching control.

(7) If the skip signal is turned ON with the M code signal turned ON, the transition to the next data is not carried out until the M code signal is turned OFF.

[4] Setting the skip function from the PLC CPU

The following shows the settings and sequence program example for skipping the control being executed in axis 1 with a command from the PLC CPU.

(1) Set the following data.
(The setting is carried out using the sequence program shown below in section (2)).

Setting item		Setting value	Setting details	Buffer memory address	
				QD77MS2 QD77MS4	QD77MS16
[Cd.37]	Skip command	1	Set "1: Skip request".	1547+100n	4347+100n

n: Axis No.-1

*: Refer to Section 5.7 "List of control data" for details on the setting details.

(2) Add the following sequence program to the control program, and write it to the PLC CPU.

1) When the "skip command" is input, the value "1" (skip request) set in "[Cd.37] Skip command" is written to the buffer memory of Simple Motion module.

[QD77MS4 program example]

```
*
* No.19 Skip program
*
```

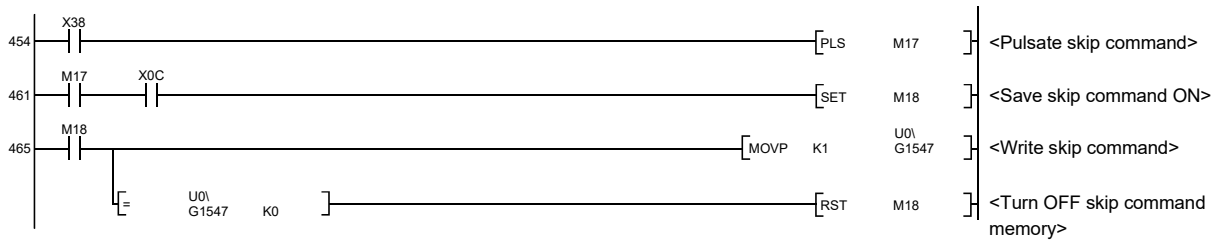

[5] Setting the skip function using an external command signal

The skip function can also be executed using an "external command signal".
The following shows the settings and sequence program example for skipping the control being executed in axis 1 using an "external command signal".

(1) Set the following data to execute the skip function using an external command signal.
(The setting is carried out using the sequence program shown below in section (2)).

Setting item		Setting value	Setting details	Buffer memory address	
				QD77MS2 QD77MS4	QD77MS16
[Pr.42]	External command function selection	3	Set "3: Skip request".	62+150n	
[Pr.95]	External command signal selection	1	Set "1: DI1".		69+150n
[Cd.8]	External command valid	1	Set "1: Validate external command".	1505+100n	4305+100n

n: Axis No.-1

∗: Refer to Section 5.2 "List of parameter" or Section 5.7 "List of control data" for details on the setting details.

(2) Add the following sequence program to the control program, and write it to the PLC CPU.

[QD77MS4 program example]

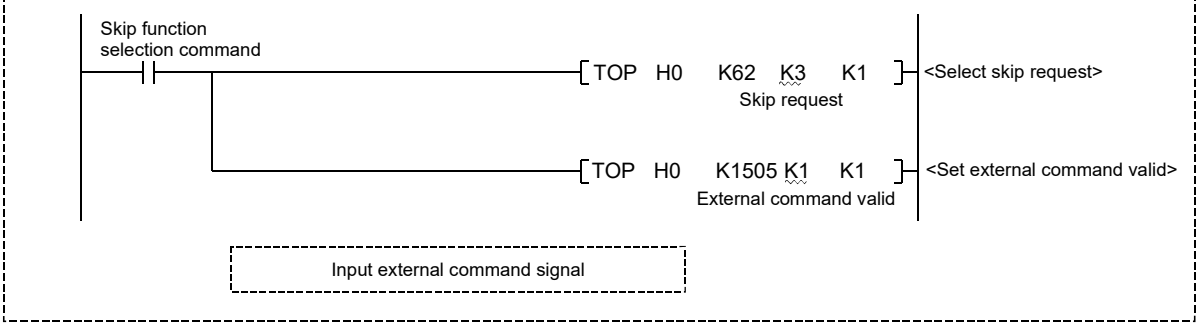

13.7.3 M code output function

The "M code output function" is used to command sub work (clamping, drill rotation, tool replacement, etc.) related to the positioning data being executed.
When the M code ON signal is turned ON during positioning execution, a No. called the M code is stored in "[Md.25] Valid M code". These "[Md.25] Valid M code" are read from the PLC CPU, and used to command auxiliary work. M codes can be set for each positioning data. (Set in setting item "[Da.10] M code/Condition data No./Number of LOOP to LEND repetitions" of the positioning data.)
The timing for outputting (storing) the M codes can also be set in the "M code output function".

Signal	QD77MS2/QD77MS4	QD77MS16
M code ON signal	X4, X5, X6, X7	M code ON ([Md.31] Status: b12)

The details shown below explain about the "M code output function".
[1] M code ON signal output timing
[2] M code ON signal OFF request
[3] Precautions during control
[4] Setting the M code output function
[5] Reading M codes

[1] M code ON signal output timing

The timing for outputting (storing) the M codes can be set in the "M code output function". (The M code is stored in "[Md.25] Valid M code" when the M code ON signal is turned ON.)
The following shows the two types of timing for outputting M codes: the "WITH mode" and the "AFTER mode".

(1) WITH mode

The M code ON signal is turned ON at the positioning start, and the M code is stored in "[Md.25] Valid M code".

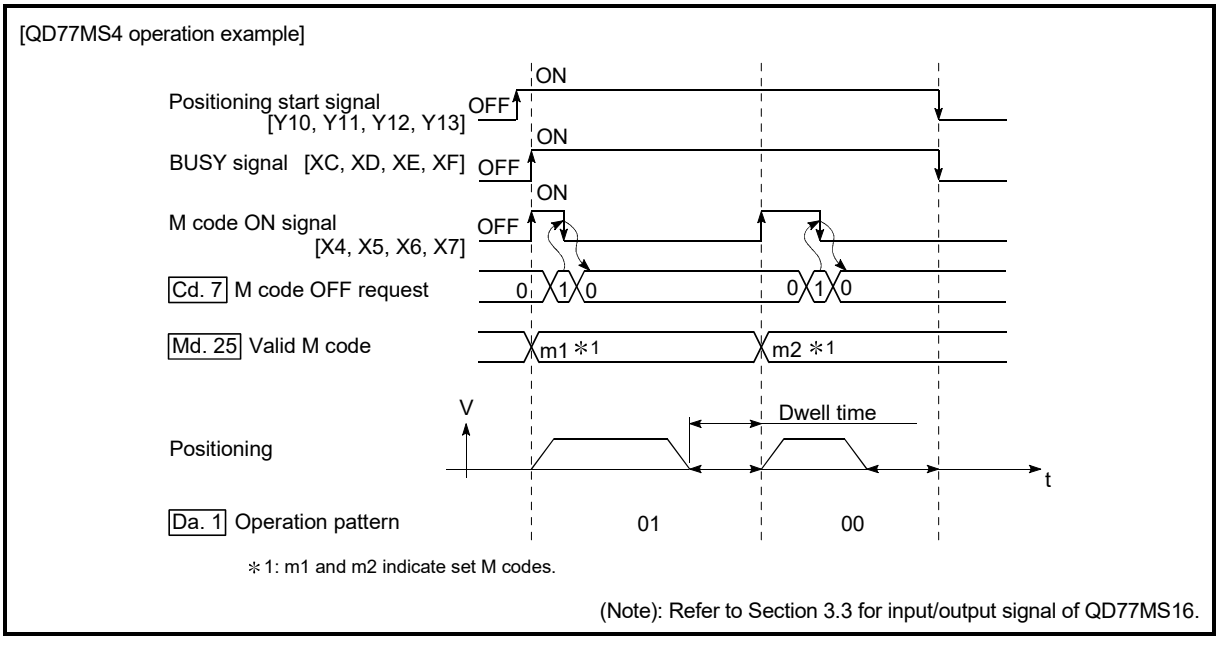

Fig. 13.38 M code ON/OFF timing (WITH mode)

(2) AFTER mode

The M code ON signal is turned ON at the positioning completion, and the M code is stored in "[Md.25] Valid M code".

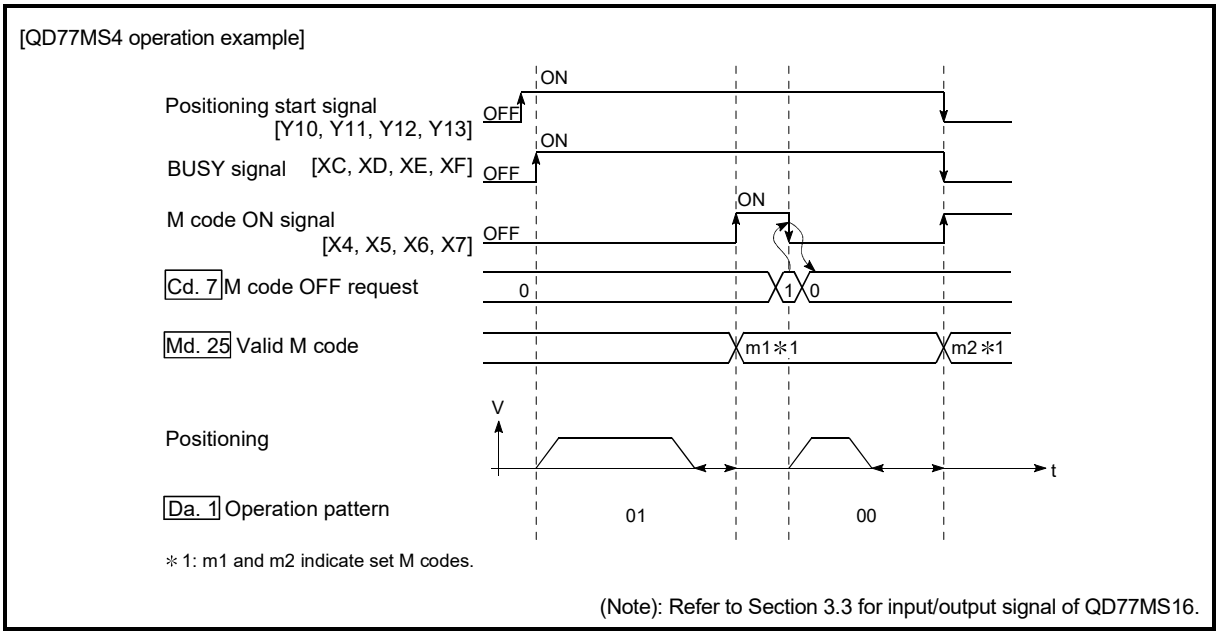

Fig. 13.39 M code ON/OFF timing (AFTER mode)

[2] M code ON signal OFF request

When the M code ON signal is ON, it must be turned OFF by the sequence program.

To turn OFF the M code ON signal, set "1" (turn OFF the M code signal) in "[Cd.7] M code OFF request".

Setting item		Setting value	Setting details	Buffer memory address	
				QD77MS2 QD77MS4	QD77MS16
[Cd.7]	M code OFF request	1	Set "1: Turn OFF the M code ON signal".	1504+100n	4304+100n

n: Axis No.-1

∗: Refer to Section 5.7 "List of control data" for details on the setting details.

The next positioning data will be processed as follows if the M code ON signal is not turned OFF. (The processing differs according to the "[Da.1] Operation pattern".)

[Da.1] Operation pattern		Processing
00	Independent positioning control (Positioning control)	The next positioning data will not be executed until the M code ON signal is turned OFF.
01	Continuous positioning control	
11	Continuous path control	The next positioning data will be executed. If the M code is set to the next positioning data, the warning "M code ON signal ON" (warning code: 503) will occur.

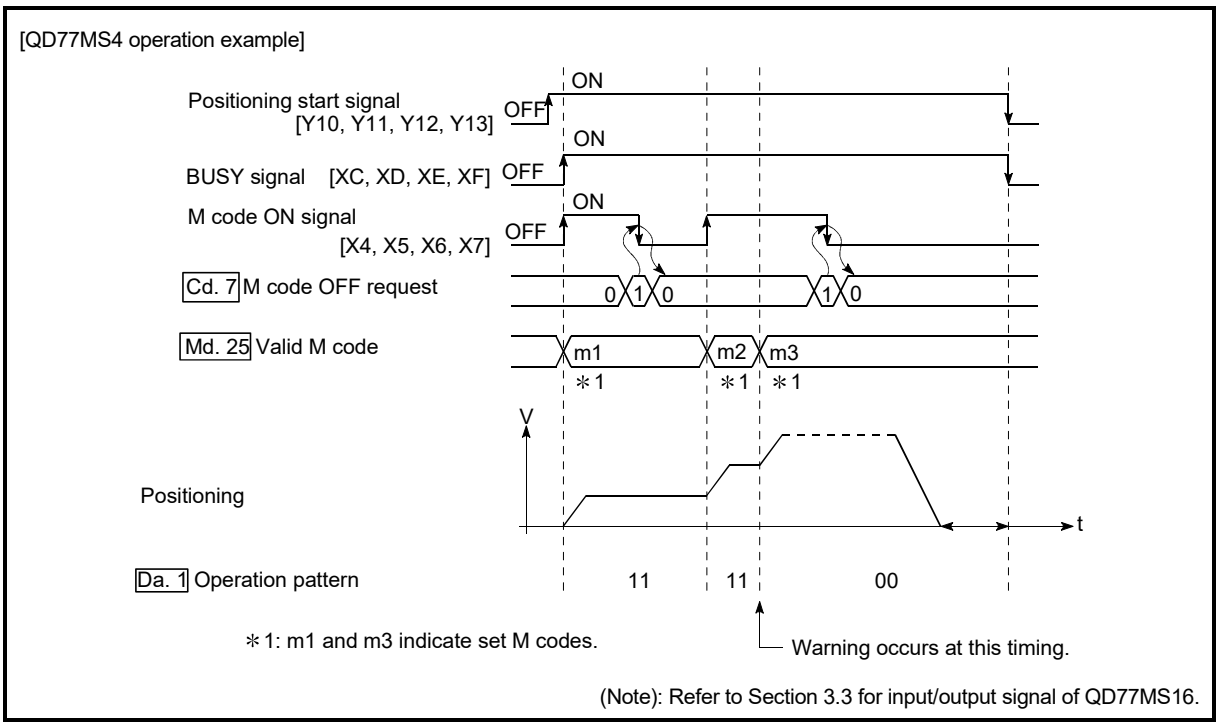

Fig. 13.40 Warning due to an M code ON signal during continuous path control

POINT
If the M code output function is not required, set a "0" in setting item "[Da.10] M code/Condition data No./Number of LOOP to LEND repetitions" of the positioning data.

[3] Precautions during control

(1) During interpolation control, the reference axis M code ON signal is turned ON.

(2) The M code ON signal will not turn ON if "0" is set in "[Da.10] M code/Condition data No./Number of LOOP to LEND repetitions". (The M code will not be output, and the previously output value will be held in "[Md.25] Valid M code".)

(3) If the M code ON signal is ON at the positioning start, the error "M code ON signal start" (error code: 536) will occur, and the positioning will not start.

(4) If the PLC READY signal [Y0] is turned OFF, the M code ON signal will turn OFF and "0" will be stored in "[Md.25] Valid M code".

(5) If the positioning operation time is short during continuous path control, there will not be enough time to turn OFF the M code ON signal, and the warning "M code ON signal ON" (warning code: 503) may occur. In this case, set a "0" in the "[Da.10] M code/Condition data No./Number of LOOP to LEND repetitions" of that section's positioning data to prevent the M code from being output for avoiding the warning occurrence.

(6) In the AFTER mode during speed control, the M code is not output and the M code ON signal does not turn ON.

(7) If current value changing where "9003" has been set to "[Cd.3] Positioning start No." is performed, the M code output function is made invalid.

[4] Setting the M code output function

The following shows the settings to use the "M code output function".

(1) Set the M code No. in the positioning data "[Da.10] M code/Condition data No./Number of LOOP to LEND repetitions".

(2) Set the timing to output the M code ON signal.

Set the required value in the following parameter, and write it to the Simple Motion module.

The set details are validated at the rising edge (OFF → ON) of the PLC READY signal [Y0].

Setting item		Setting value	Setting details	Buffer memory address	
				QD77MS2 QD77MS4	QD77MS16
[Pr.18]	M code ON signal output timing	→	Set the timing to output the M code ON signal. 0: WITH mode 1: AFTER mode	27+150n	

n: Axis No.-1

∗: Refer to Section 5.2 "List of parameters" for setting details.

[5] Reading M codes

"M codes" are stored in the following buffer memory when the M code ON signal turns ON.

Monitor item		Monitor value	Storage details	Buffer memory address	
				QD77MS2 QD77MS4	QD77MS16
[Md.25]	Valid M code	→	The M code No. ([Da.10] M code/Condition data No./Number of LOOP to LEND repetitions) set in the positioning data is stored.	808+100n	2408+100n

n: Axis No.-1

∗: Refer to Section 5.6 "List of monitor data" for information on the storage details.

The following shows a sequence program example for reading the "[Md.25] Valid M code" to the PLC CPU data register (D110). (The read value is used to command the sub work.)

Read M codes not as "rising edge commands", but as "ON execution commands".

[QD77MS4 program example]

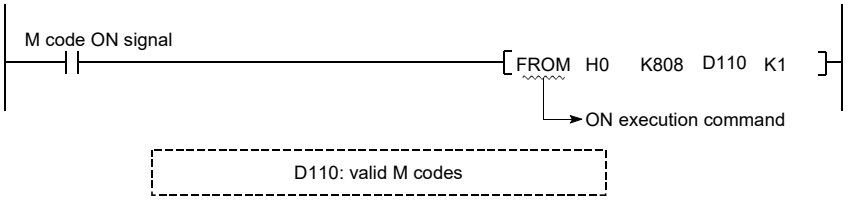

13.7.4 Teaching function

The "teaching function" is used to set addresses aligned using the manual control (JOG operation, inching operation manual pulse generator operation) in the positioning data addresses ("[Da.6] Positioning address/movement amount", "[Da.7] Arc address").

The details shown below explain about the "teaching function".

[1] Control details
[2] Precautions during control
[3] Data used in teaching
[4] Teaching procedure
[5] Teaching program example

[1] Control details

(1) Teaching timing

Teaching is executed using the sequence program when the BUSY signal is OFF. (During manual control, teaching can be carried out as long as the axis is not BUSY, even when an error or warning has occurred.)

Signal	QD77MS2/QD77MS4	QD77MS16
BUSY signal	XC to XF	X10 to X1F

(2) Addresses for which teaching is possible

The addresses for which teaching is possible are "command position values" ([Md.20] Command position value) having the HP as a reference. The settings of the "movement amount" used in incremental system positioning cannot be used. In the teaching function, these "command position values" are set in the "[Da.6] Positioning address/movement amount" or "[Da.7] Arc address".

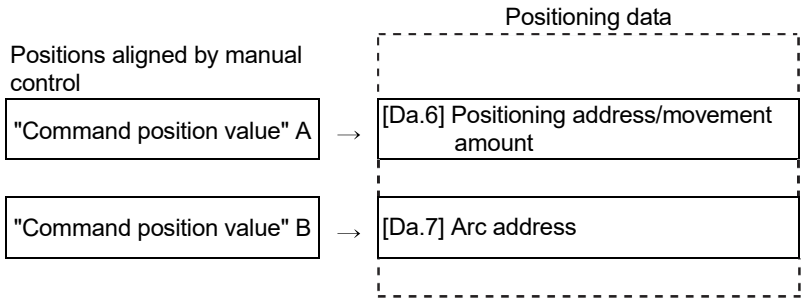

(3) Dedicated instructions "ZP.TEACH 1, ZP.TEACH 2, ZP.TEACH 3, ZP.TEACH 4"

When the dedicated instructions "ZP.TEACH 1, ZP.TEACH 2, ZP.TEACH 3, ZP.TEACH 4" are used to execute the teaching function, the programming becomes easier. Refer to Chapter 15 "Dedicated Instructions" for details.

[2] Precautions during control

(1) Before teaching, a "machine HPR" must be carried out to establish the HP. (When a current value changing, etc., is carried out, "[Md.20] Command position value" may not show absolute addresses having the HP as a reference.)

(2) Teaching cannot be carried out for positions to which movement cannot be executed by manual control (positions to which the workpiece cannot physically move). (During center point designation circular interpolation control, etc., teaching of "[Da.7] Arc address" cannot be carried out if the center point of the arc is not within the moveable range of the workpiece.)

(3) Writing to the flash ROM can be executed up to 100,000 times.
If writing to the flash ROM exceeds 100,000 times, the writing may become impossible (assured value is up to 100,000 times).
If the error "Flash ROM write number error" (error code: 805) occurs when writing to the flash ROM has been completed, check whether or not the program is created so as to write continuously to the flash ROM.

[3] Data used in teaching

The following control data is used in teaching.

Setting item		Setting value	Setting details	Buffer memory address	
				QD77MS2 QD77MS4	QD77MS16
[Cd.1]	Flash ROM write request	1	Write the set details to the flash ROM (backup the changed data).	1900	5900
[Cd.38]	Teaching data selection	→	Sets to which "command position value" is written. 0: Written to "[Da.6] Positioning address/ movement amount". 1: Written to "[Da.7] Arc address".	1548+100n	4348+100n
[Cd.39]	Teaching positioning data No.	→	Designates the data to be taught. (Teaching is carried out when the setting value is 1 to 600.) When teaching has been completed, this data is zero cleared.	1549+100n	4349+100n

n: Axis No.-1

*: Refer to Section 5.7 "List of control data" for details on the setting details.

[4] Teaching procedure

The following shows the procedure for a teaching operation.

(1) When teaching to the "[Da.6] Positioning address/movement amount"
(Teaching example on QD77MS4 [axis 1])

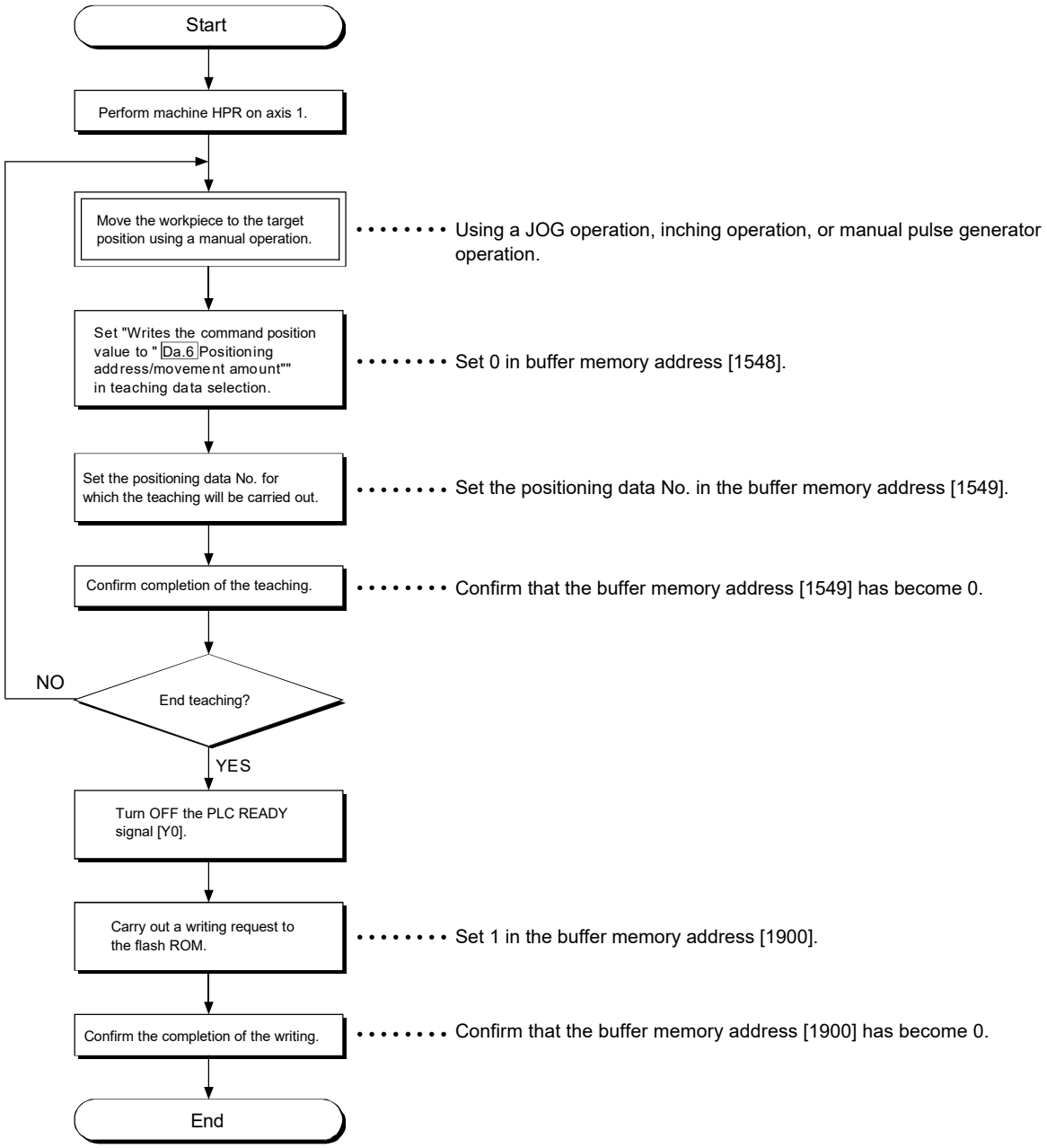

(2) When teaching to the "[Da.7] Arc address", then teaching to the "[Da.6] Positioning address/movement amount"
(Teaching example for 2-axis circular interpolation control with sub point designation on QD77MS4 [axis 1] and [axis 2])

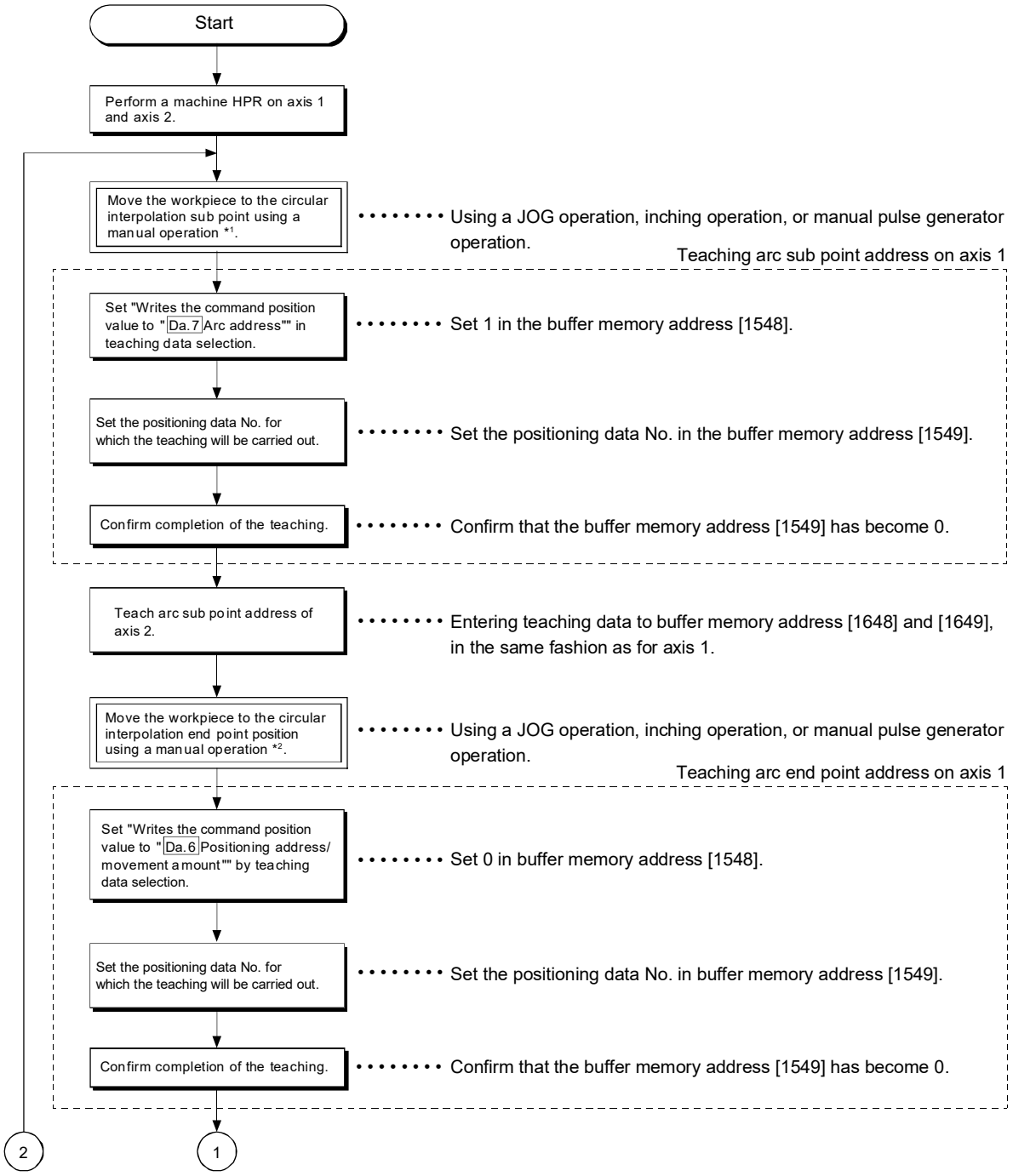

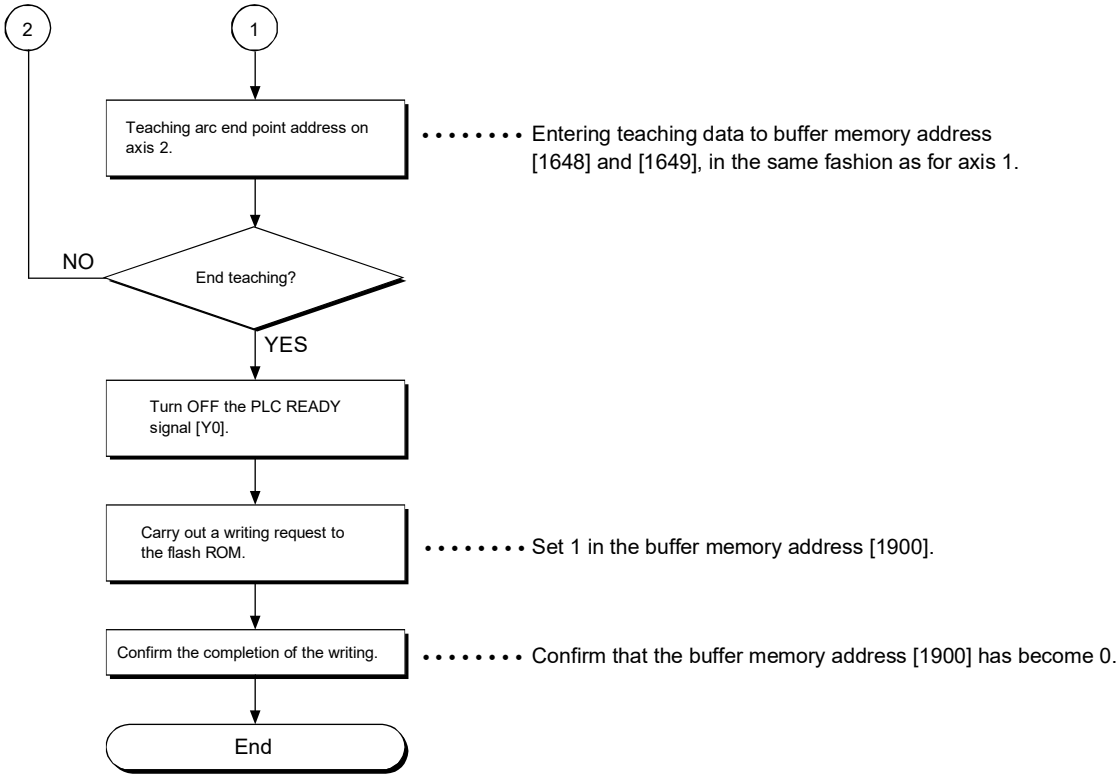

[Motion path]

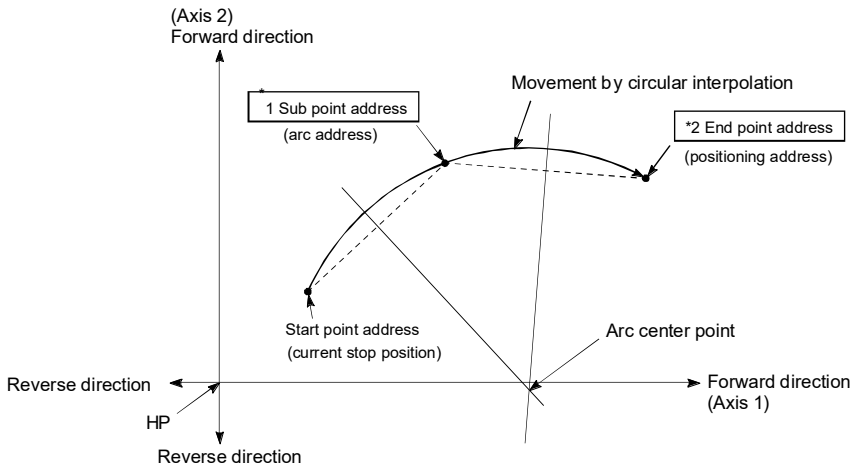

*1: The sub point address is stored in the arc address.

*2: The end point address is stored in the positioning address.

[5] Teaching program example

The following shows a sequence program example for setting (writing) the positioning data obtained with the teaching function to the Simple Motion module.

(1) Setting conditions

- When setting the command position value as the positioning address, write it when the BUSY signal is OFF.

(2) Program example

- The following example shows a program carrying out the teaching of axis 1 by the dedicated instruction "ZP.TEACH 1".
  1) Move the workpiece to the target position using a JOG operation (or an inching operation, a manual pulse generator operation).

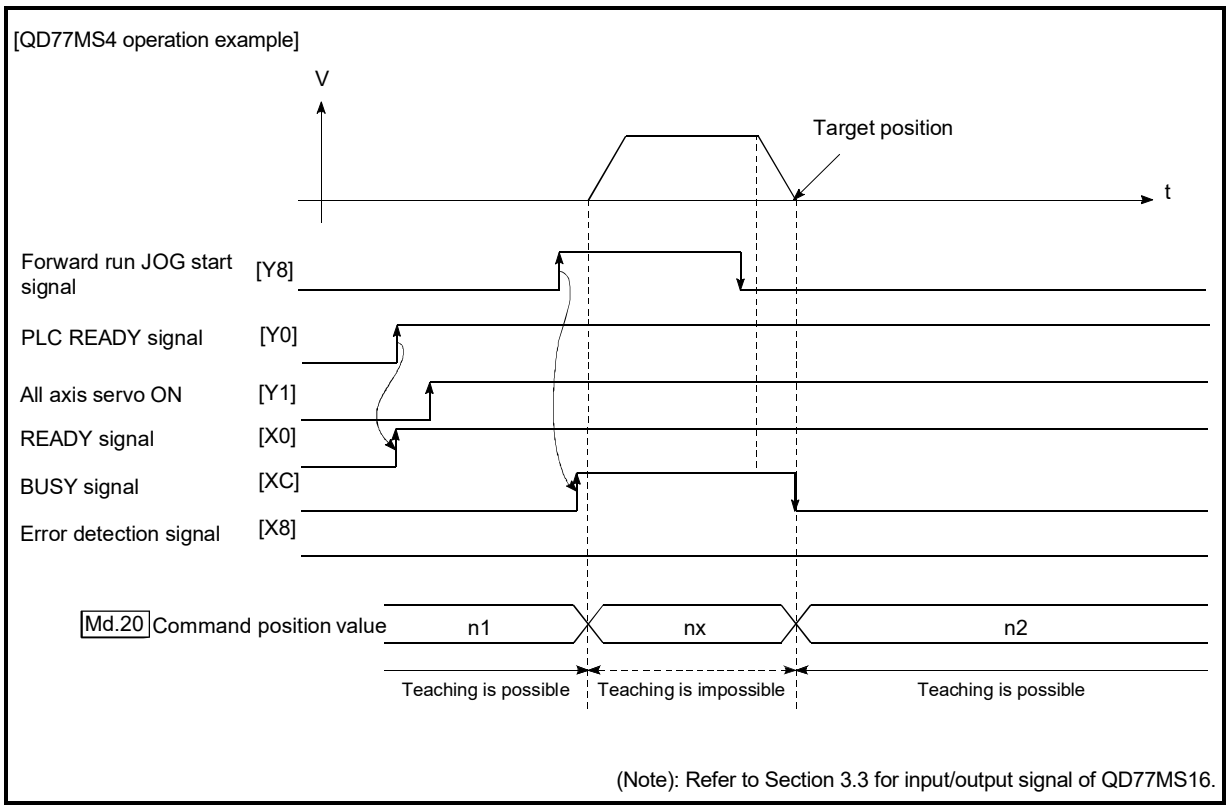

2) Carry out the teaching operation with the following program.

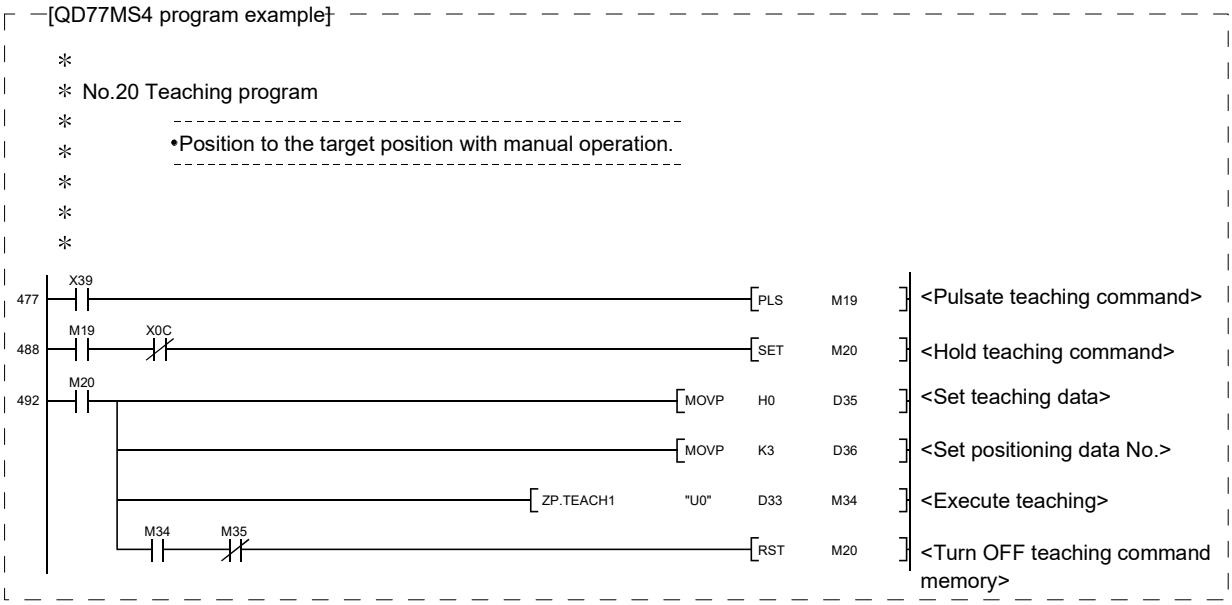

POINT

(1) Confirm the teaching function and teaching procedure before setting the positioning data.
(2) The positioning addresses that are written are absolute address (ABS) values.
(3) The positioning data written by the teaching function overwrites the data of the buffer memory only. Therefore, read from the buffer memory and write to the flash ROM before turning the power OFF as necessary.

13.7.5 Command in-position function

The "command in-position function" checks the remaining distance to the stop position during the automatic deceleration of positioning control, and sets "1". This flag is called the "command in-position flag". The command in-position flag is used as a front-loading signal indicating beforehand the completion of the position control.

The details shown below explain about the "command in-position function".

[1] Control details
[2] Precautions during control
[3] Setting the command in-position function
[4] Confirming the command in-position flag

[1] Control details

The following shows control details of the command in-position function.

(1) When the remaining distance to the stop position during the automatic deceleration of positioning control becomes equal to or less than the value set in "[Pr.16] Command in-position width", "1" is stored in the command in-position flag ([Md.31] Status: b2).

(Command in-position width check)

Remaining distance ≤ "[Pr.16] Command in-position width" setting value

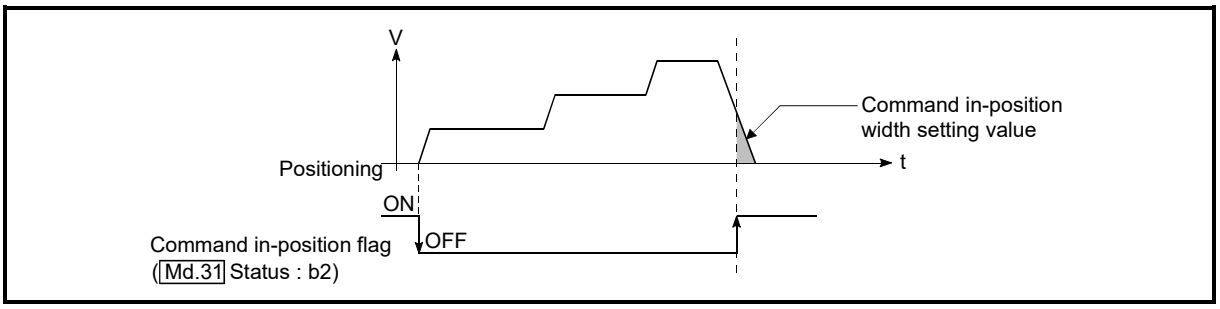

Fig. 13.41 Command in-position operation

(2) A command in-position width check is carried out every operation cycle.

[2] Precautions during control

(1) A command in-position width check will not be carried out in the following cases.
- During speed control
- During speed control in speed-position switching control
- During speed control in position-speed switching control
- During speed control mode
- During torque control mode
- During continuous operation to torque control mode

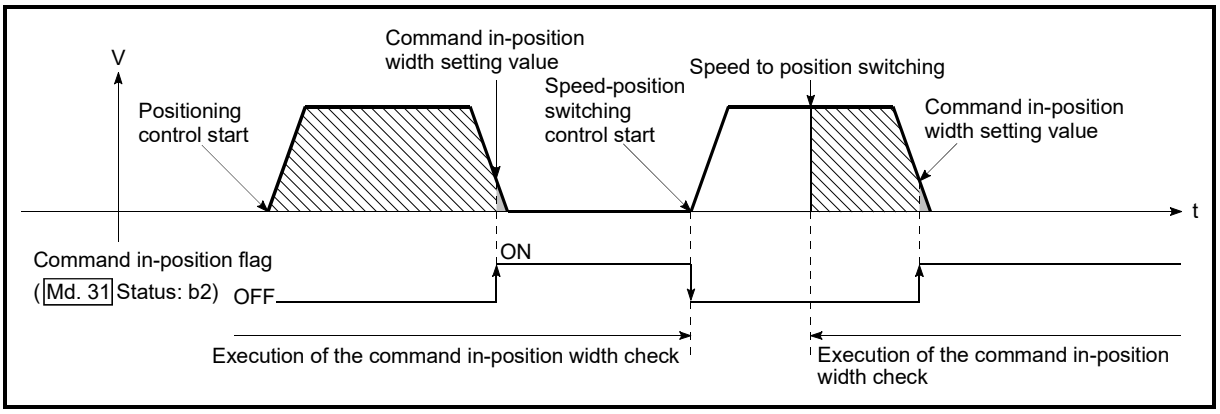

Fig. 13.42 Command in-position width check

(2) The command in-position flag will be turned OFF in the following cases. ("0" will be stored in "[Md.31] Status: b2".)
- At the positioning control start
- At the speed control start
- At the speed-position switching control, position-speed switching control start
- At the HPR control start
- At the JOG operation start
- At the inching operation start
- When the manual pulse generator operation is enabled

(3) The "[Pr.16] Command in-position width" and command in-position flag ([Md.31] Status: b2) of the reference axis are used during interpolation control.
When the "[Pr.20] Interpolation speed designation method" is "Composite speed", the command in-position width check is carried out in the remaining distance on the composite axis (line/arc connecting the start point address and end point address).

[3] Setting the command in-position function

To use the "command in-position function", set the required value in the parameter shown in the following table, and write it to the Simple Motion module. The set details are validated at the rising edge (OFF → ON) of the PLC READY signal [Y0].

Setting item		Setting value	Setting details	Factory-set initial value
[Pr.16]	Command in-position width	→	Turn ON the command in-position flag, and set the remaining distance to the stop position of the position control.	100

∗: Refer to Section 5.2 "List of parameters" for setting details.

[4] Confirming the command in-position flag

The "command in-position flag" is stored in the following buffer memory.

Monitor item		Monitor value	Storage details	Buffer memory address	
				QD77MS2 QD77MS4	QD77MS16
[Md.31]	Status	→	The command in-position flag is stored in the "b2" position.	817+100n	2417+100n

n: Axis No.-1

∗: Refer to Section 5.6 "List of monitor data" for information on the storage details.

REMARK

- Parameters are set for each axis.
- It is recommended that the parameters be set whenever possible with GX Works2. Execution by sequence program uses many sequence programs and devices. The execution becomes complicated, and the scan times will increase.

13.7.6 Acceleration/deceleration processing function

The "acceleration/deceleration processing function" adjusts the acceleration/deceleration of each control to the acceleration/deceleration curve suitable for device.
Setting the acceleration/deceleration time changes the slope of the acceleration/deceleration curve.
The following two methods can be selected for the acceleration/deceleration curve:

- Trapezoidal acceleration/deceleration
- S-curve acceleration/deceleration

Refer to Section 12.1 "Speed-torque control" for acceleration/deceleration processing of speed-torque control.

The details shown below explain about the "acceleration/deceleration processing function".

[1] "Acceleration/deceleration time 0 to 3" control details and setting
[2] "Acceleration/deceleration method setting" control details and setting

[1] "Acceleration/deceleration time 0 to 3" control details and setting

In the Simple Motion module, four types each of acceleration time and deceleration time can be set. By using separate acceleration/deceleration times, control can be carried out with different acceleration/deceleration times for positioning control, JOG operation, HPR, etc.
Set the required values for the acceleration/deceleration time in the parameters shown in the following table, and write them to the Simple Motion module.
The set details are validated when written to the Simple Motion module.

Setting item		Setting value	Setting details	Factory-set initial value
[Pr.9]	Acceleration time 0	→	Set the acceleration time at a value within the range of 1 to 8388608 ms.	1000
[Pr.25]	Acceleration time 1	→		1000
[Pr.26]	Acceleration time 2	→		1000
[Pr.27]	Acceleration time 3	→		1000
[Pr.10]	Deceleration time 0	→	Set the deceleration time at a value within the range of 1 to 8388608 ms.	1000
[Pr.28]	Deceleration time 1	→		1000
[Pr.29]	Deceleration time 2	→		1000
[Pr.30]	Deceleration time 3	→		1000

∗: Refer to Section 5.2 "List of parameters" for setting details.

[2] "Acceleration/deceleration method setting" control details and setting

In the "acceleration/deceleration method setting", the acceleration/deceleration processing method is selected and set. The set acceleration/deceleration processing is applied to all acceleration/deceleration. (except for inching operation, manual pulse generator operation and speed-torque control.)
The two types of "acceleration/deceleration processing method" are shown below.

(1) Trapezoidal acceleration/deceleration processing method

This is a method in which linear acceleration/deceleration is carried out based on the acceleration time, deceleration time, and speed limit value set by the user.

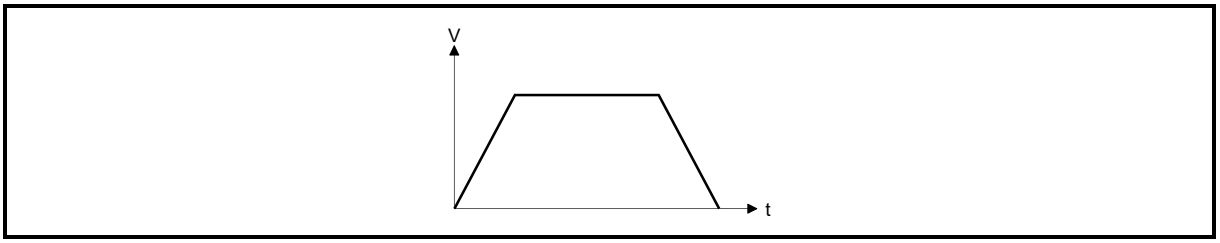

Fig. 13.43 Trapezoidal acceleration/deceleration processing method

(2) S-curve acceleration/deceleration processing method

In this method, the motor burden is reduced during starting and stopping. This is a method in which acceleration/deceleration is carried out gradually, based on the acceleration time, deceleration time, speed limit value, and "[Pr.35] S-curve ratio" (1 to 100%) set by the user.

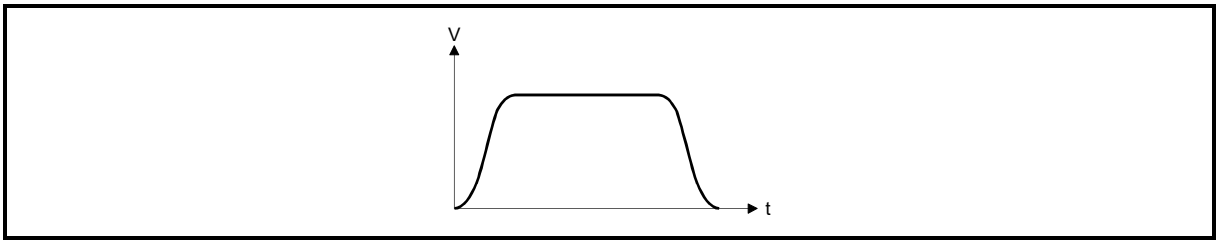

Fig. 13.44 S-curve acceleration/deceleration processing method

When a speed change request or override request is given during S-curve acceleration/ deceleration processing, S-curve acceleration/deceleration processing begins at a speed change request or override request start.

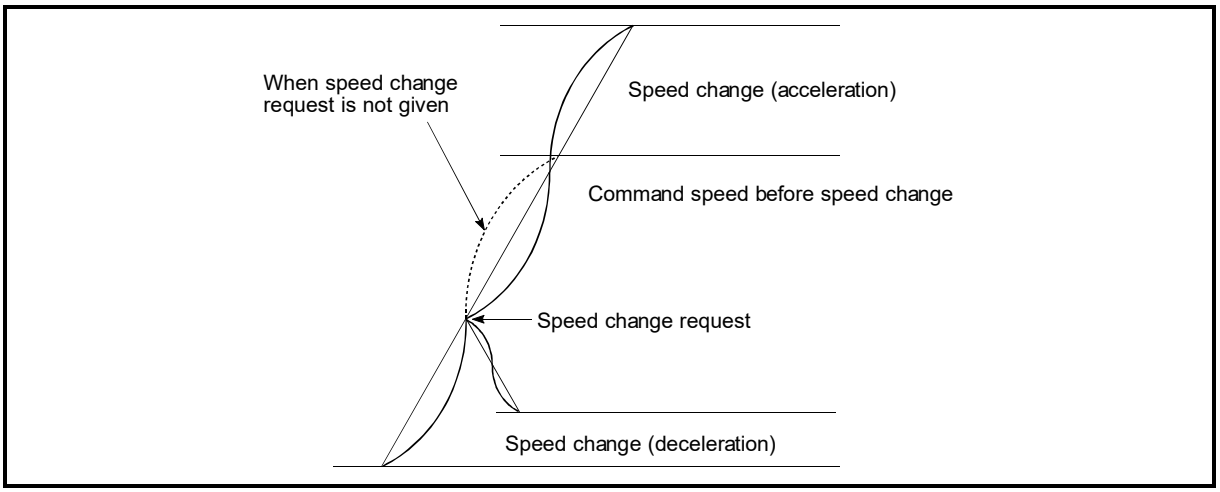

Fig. 13.45 Speed change during S-curve acceleration/deceleration processing

Set the required values for the "acceleration/deceleration method setting" in the parameters shown in the following table, and write them to the Simple Motion module.
The set details are validated when written to the Simple Motion module.

Setting item		Setting value	Setting details	Factory-set initial value
[Pr.34]	Acceleration/ deceleration process selection	→	Set the acceleration/deceleration method. 0: Trapezoidal acceleration/deceleration processing 1: S-curve acceleration/deceleration processing	0
[Pr.35]	S-curve ratio	→	Set the acceleration/deceleration curve when "1" is set in "[Pr.34] Acceleration/deceleration process selection".	100

*: Refer to Section 5.2 "List of parameters" for setting details.

REMARK

- Parameters are set for each axis.
- It is recommended that the parameters be set whenever possible with GX Works2. Execution by sequence program uses many sequence programs and devices. The execution becomes complicated, and the scan times will increase.

13.7.7 Pre-reading start function

The "pre-reading start function" does not start servo while the execution prohibition flag is ON if a positioning start request is given with the execution prohibition flag ON, and starts servo within operation cycle after OFF of the execution prohibition flag is detected. The positioning start request is given when the axis is in a standby status, and the execution prohibition flag is turned OFF at the axis operating timing.

The "pre-reading start function" will be explained below.

[1] Controls

[2] Precautions during control

[3] Program examples

[1] Controls

The pre-reading start function is performed by turning ON the positioning start signal with the execution prohibition flag ON, or by executing the dedicated instruction (ZP.PSTRT1, ZP.PSTRT2, ZP.PSTRT3, and ZP.PSTRT4). However, if positioning is started with the execution prohibition flag ON, the positioning data is analyzed but servo start is not provided. While the execution prohibition flag is ON, "[Md.26] Axis operation status" remains unchanged from "5: Analyzing". The servo starts within operation cycle after the execution prohibition flag has turned OFF, and "[Md.26] Axis operation status" changes to the status (e.g. position control, speed control) that matches the control method. (Refer to Fig.13.46)

Signal	QD77MS2/QD77MS4	QD77MS16
Execution prohibition flag	Y14, Y15, Y16, Y17	[Cd.183] Execution prohibition flag

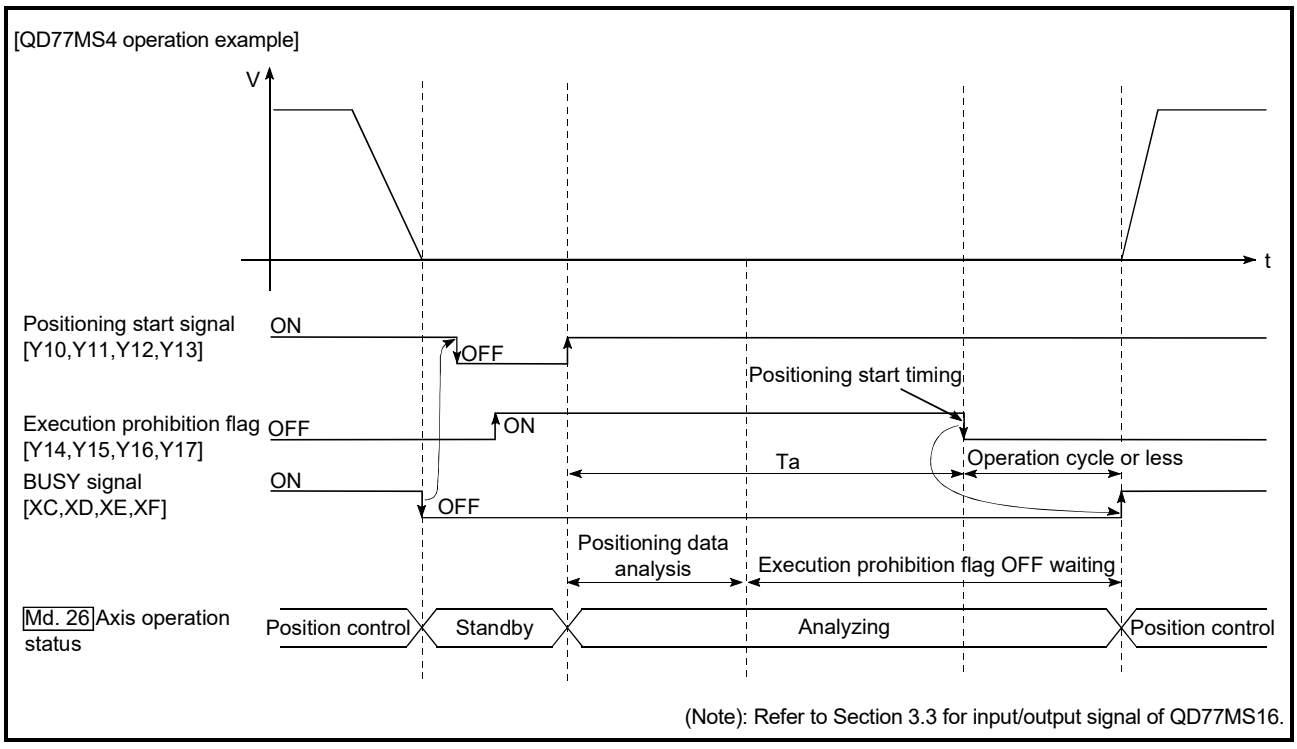

Fig. 13.46 Operations of pre-reading start function

[2] Precautions during control

(1) The time required to analyze the positioning data is up to 0.88ms (QD77MS2/QD77MS4)/3.55ms(QD77MS16).

(2) After positioning data analysis, the system is put in an execution prohibition flag OFF waiting status. Any change made to the positioning data in the execution prohibition flag OFF waiting status is not reflected on the positioning data. Change the positioning data before turning ON the positioning start signal.

(3) The pre-reading start function is invalid if the execution prohibition flag is turned OFF between when the positioning start signal has turned ON and when positioning data analysis is completed (Ta<start time, Ta: Refer to Fig. 13.46).

(4) The data No. which can be executed positioning start using "[Cd.3] Positioning start No." with the pre-reading start function are No. 1 to 600 only. Performing the pre-reading start function at the setting of No. 7000 to 7004 or 9001 to 9004 will result in the error "Outside start No. range" (error code: 543).

(5) Always turn ON the execution prohibition flag at the same time or before turning ON the positioning start signal. Pre-reading may not be started if the execution prohibition flag is turned ON during Ta after the positioning start signal is turned ON. The pre-reading start function is invalid if the execution prohibition flag is turned ON after positioning start with the execution prohibition flag OFF. (It is made valid at the next positioning start.)

[3] Program examples

[QD77MS4 program example]

```
*
*  Pre-reading start program (when positioning start signal Y10 is used)
*
```

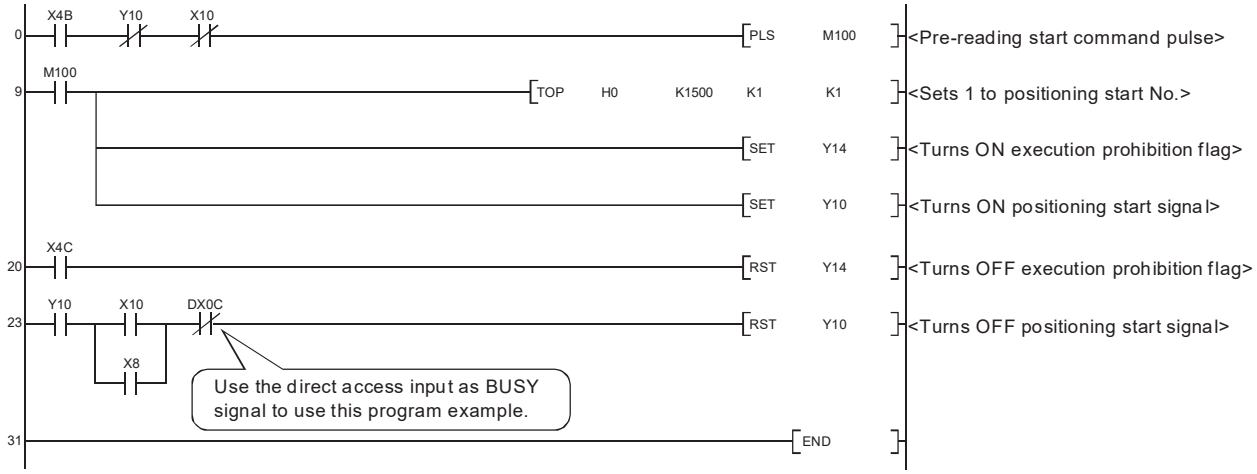


```
*
*  Pre-reading start program (when dedicated instruction ZP.PSTRT1 is used)
*
```

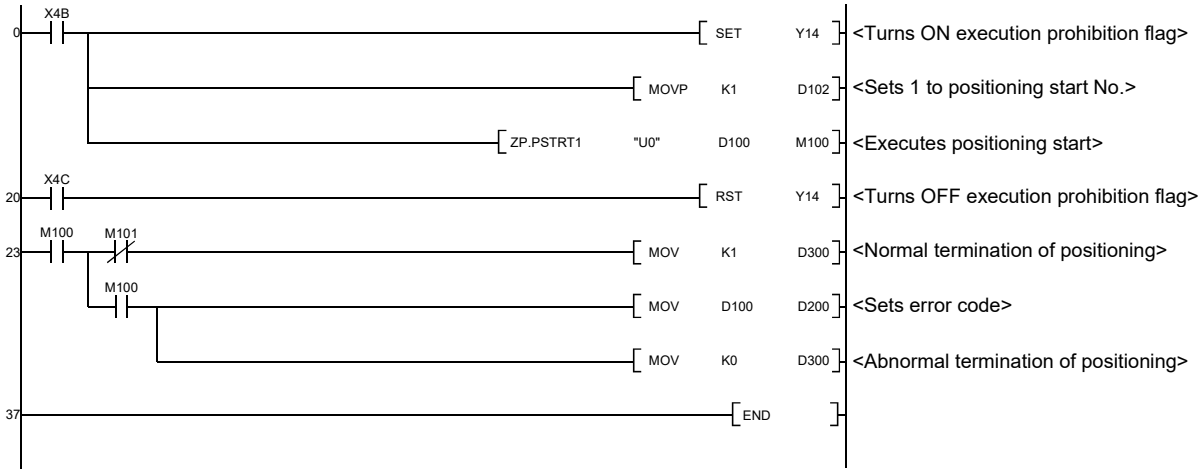

13.7.8 Deceleration start flag function

The "deceleration start flag function" turns ON the flag when the constant speed status or acceleration status switches to the deceleration status during position control whose operation pattern is "Positioning complete". This function can be used as a signal to start the operation to be performed by other equipment at each end of position control or to perform preparatory operation, etc. for the next position control.

For the "deceleration start flag function", the following will be explained.

[1] Control details
[2] Precautions during control
[3] Deceleration start flag function setting method
[4] Checking of deceleration start flag

[1] Control details

When deceleration for a stop is started in the position control whose operation pattern is "Positioning complete", "1" is stored into "[Md.48] Deceleration start flag". When the next operation start is made or the manual pulse generator operation enable status is gained, "0" is stored. (Refer to Fig. 13.47.)

(1) Start made with positioning data No. specified

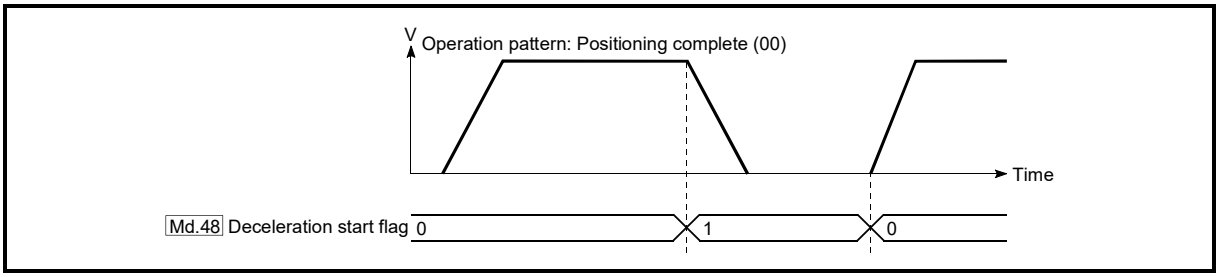

Fig. 13.47 Operation of deceleration start flag

(2) Block start

At a block start, this function is valid for only the position control whose operation pattern is "Positioning complete" at the point whose shape has been set to "End". (Refer to Fig. 13.48.)

The following table indicates the operation of the deceleration start flag in the case of the following block start data and positioning data.

Block start data	[Da.11] Shape	[Da.12] Start data No.	[Da.13] Special start instruction
1st point	1: Continue	1	0: Block start
2nd point	1: Continue	3	0: Block start
3rd point	0: End	4	0: Block start
•			
•			

Positioning Data No.	[Da.1] Operation pattern
1	01: Continuous positioning control
2	00: Positioning complete
3	00: Positioning complete
4	11: Continuous path control
5	00: Positioning complete
•	
•	

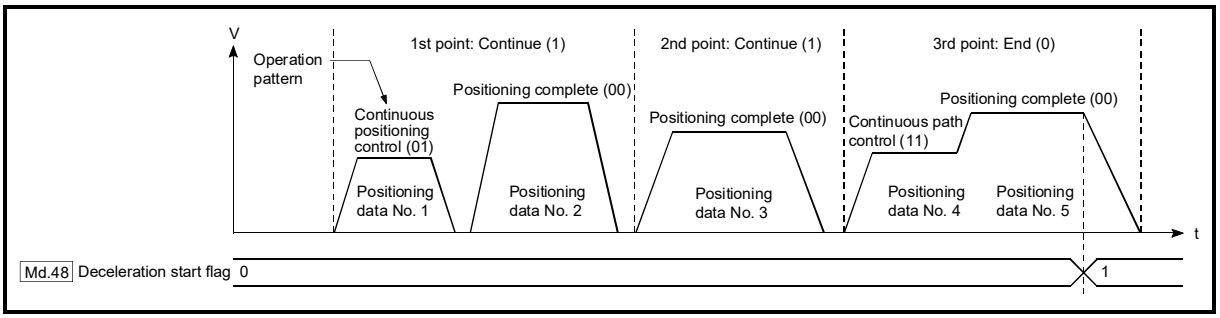

Fig. 13.48 Operation of deceleration start flag at block start

[2] Precautions during control

(1) The deceleration start flag function is valid for the control method of "1-axis linear control", "2-axis linear interpolation control", "3-axis linear interpolation control", "4-axis linear interpolation control", "speed-position switching control" or "position-speed switching control". (In the case of linear interpolation control, the function is valid for only the reference axis.) Refer to Section 3.2.5 "Combination of QD77MS main functions and sub functions".

(2) The deceleration start flag does not turn ON when the operation pattern is "continuous positioning control" or "continuous path control".

(3) The deceleration start flag function is invalid for an HPR, JOG operation, inching operation, manual pulse generator operation, speed-torque control and deceleration made with a stop signal.

(4) The deceleration start flag does not turn ON when a speed change or override is used to make deceleration.

(5) If a target position change is made while the deceleration start flag is ON, the deceleration start flag remains ON.

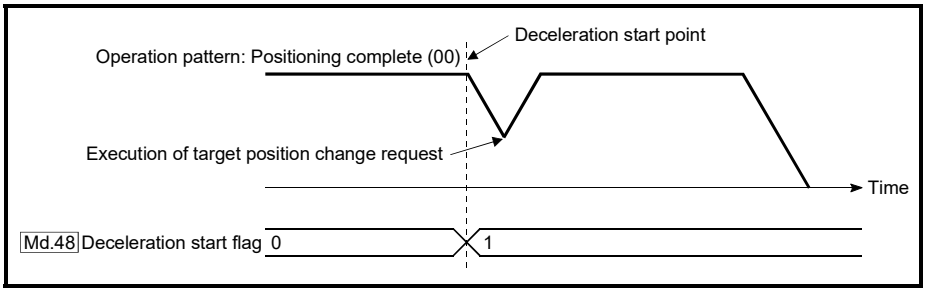

(6) When the movement direction is reversed by a target position change, the deceleration start flag turns ON.

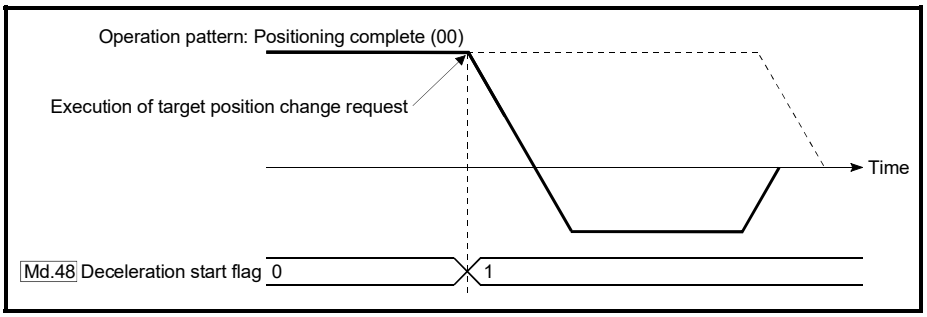

(7) During position control of position-speed switching control, the deceleration start flag is turned ON by automatic deceleration.
The deceleration start flag remains ON if position control is switched to speed control by the position-speed switching signal after the deceleration start flag has turned ON.

(8) If the condition start of a block start is not made since the condition is not satisfied, the deceleration start flag turns ON when the shape is "End".

(9) When an interrupt request during continuous operation is issued, the deceleration start flag turns ON at a start of deceleration in the positioning data being executed.

[3] Deceleration start flag function setting method

To use the "deceleration start flag function", set "1" to the following control data using a sequence program.
The set data is made valid on the rising edge (OFF to ON) of the PLC READY signal [Y0].

Setting item		Setting value	Setting details	Buffer memory address	
				QD77MS2 QD77MS4	QD77MS16
[Cd.41]	Deceleration start flag valid	→	Set whether the deceleration start flag function is made valid or invalid. 0: Deceleration start flag invalid 1: Deceleration start flag valid	1905	5905

∗: Refer to Section 5.7 "List of control data" for details on the setting details.

[4] Checking of deceleration start flag

The "deceleration start flag" is stored into the following buffer memory addresses.

Monitor item		Monitor value	Storage details	Buffer memory address	
				QD77MS2 QD77MS4	QD77MS16
[Md.48]	Deceleration start flag	→	0: Status other than below 1: Status from deceleration start to next operation start or manual pulse generator operation enable	899+100n	2499+100n

n: Axis No.-1

∗: Refer to Section 5.6 "List of monitor data" for information on the storage details.

13.7.9 Stop command processing for deceleration stop function

The "stop command processing for deceleration stop function" is provided to set the deceleration curve if a stop cause occurs during deceleration stop processing (including automatic deceleration).
This function is valid for both trapezoidal and S-curve acceleration/deceleration processing methods.
(For the stop cause, refer to Section 1.2.3 "Outline of stopping".)

The "stop command processing for deceleration stop function" performs the following two operations:

(1) Deceleration curve re-processing
Re-processes a deceleration curve starting from the speed at stop cause occurrence until at a stop, according to the preset deceleration time.

(2) Deceleration curve continuation
Continues the current deceleration curve after a stop cause has occurred.

This section explains the "stop command processing for deceleration stop function" as follows:

[1] Control
[2] Precautions for control
[3] Setting method

[1] Control

The operation of "stop command processing for deceleration stop function" is explained below.

(1) Deceleration curve re-processing

A deceleration curve is re-processed starting from the speed at stop cause occurrence until at a stop, according to the preset deceleration time.
If a stop cause occurs during automatic deceleration of position control, the deceleration stop processing stops as soon as the target has reached the positioning address specified in the positioning data that is currently executed.

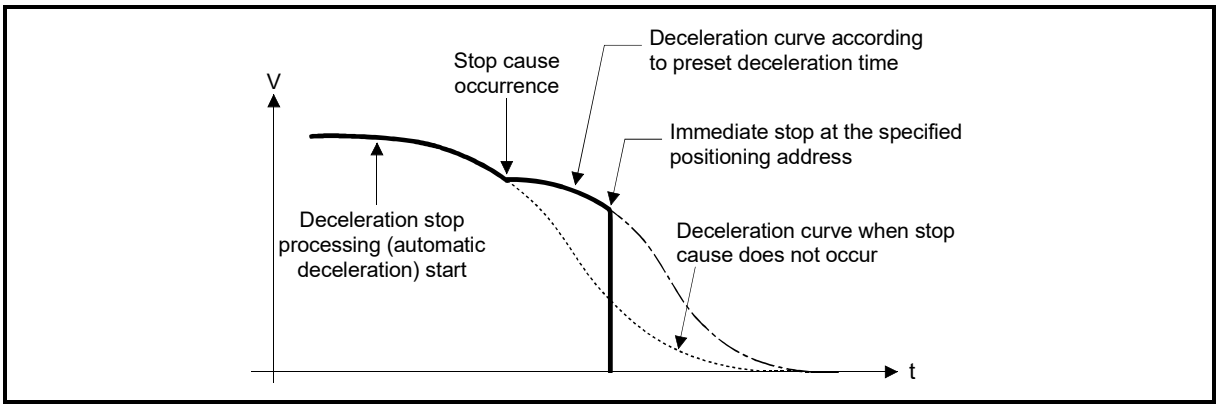

Fig. 13.49 Deceleration curve re-processing operation (for position control or S-curve acceleration/deceleration processing)

(2) Deceleration curve continuation

The current deceleration curve is continued after a stop cause has occurred. If a stop cause occurs during automatic deceleration of position control, the deceleration stop processing may be complete before the target has reached the positioning address specified in the positioning data that is currently executed.

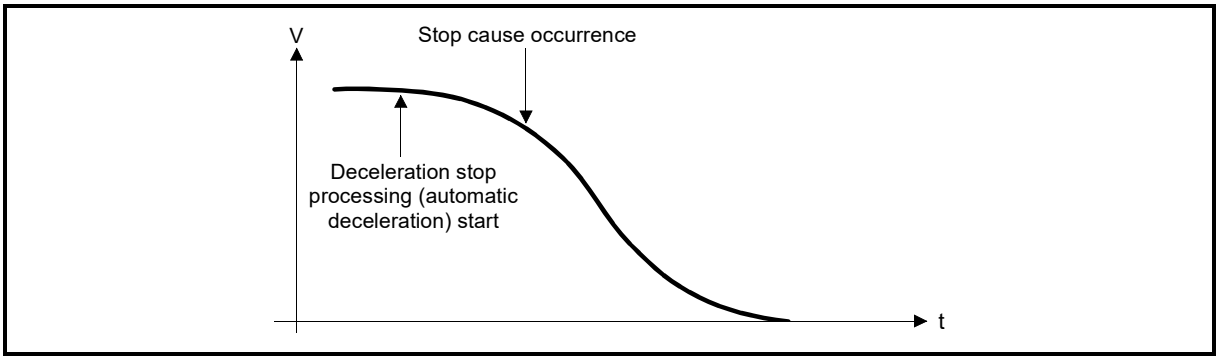

Fig. 13.50 Deceleration curve continuation operation (for position control or S-curve acceleration/deceleration processing)

[2] Precautions for control

(1) In manual control (JOG operation, inching operation, manual pulse generator operation) and speed-torque control, the stop command processing for deceleration stop function is invalid.

(2) The stop command processing for deceleration stop function is valid when "0: Normal deceleration stop" is set in "[Pr.37] Stop group 1 rapid stop selection" to "[Pr.39] Stop group 3 rapid stop selection" as the stopping method for stop cause occurrence.

(3) The stop command processing for deceleration stop function is invalid when "1: Rapid stop" is set in "[Pr.37] Stop group 1 rapid stop selection" to "[Pr.39] Stop group 3 rapid stop selection". (A deceleration curve is re-processed starting from the speed at stop cause occurrence until at a stop, according to the "[Pr.36] Rapid stop deceleration time".)
In the position control (including position control of speed/position changeover control or position/speed changeover control) mode, positioning may stop immediately depending on the stop cause occurrence timing and "[Pr.36] Rapid stop deceleration time" setting.

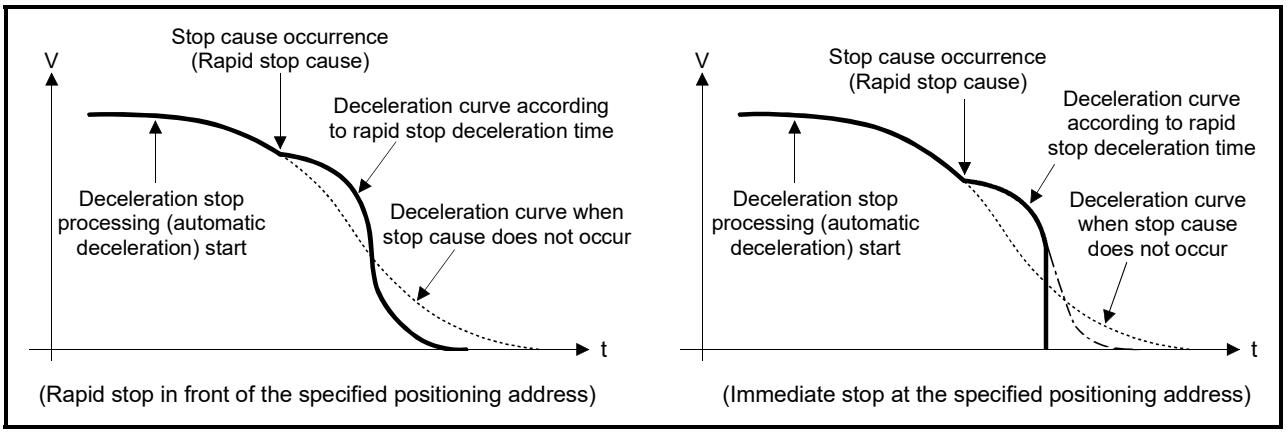

Fig. 13.51 Rapid stop operation (for position control or S-curve acceleration/deceleration processing)

[3] Setting method

To use the "stop command processing for deceleration stop function", set the following control data in a sequence program.
The set data are made valid as soon as they are written to the buffer memory.
The PLC READY signal [Y0] is irrelevant.

Setting item		Setting value	Setting details	Buffer memory address	
				QD77MS2 QD77MS4	QD77MS16
[Cd.42]	Stop command processing for deceleration stop selection	→	Set the stop command processing for deceleration stop function. 0: Deceleration curve re-processing 1: Deceleration curve continuation	1907	5907

*: For details of the setting details, refer to Section 5.7 "List of control data".

13.7.10 Speed control 10 x multiplier setting for degree axis function

The "Speed control 10 x multiplier setting for degree axis function" is provided to execute the positioning control by 10 x speed of the setting value in the command speed and the speed limit value when the setting unit is "degree".

This section explains the "speed control 10 multiplier specifying function for degree axis" as follows:

[1] Control details
[2] Setting method of "Speed control 10 x multiplier setting for degree axis function"

[1] Control details

When "Speed control 10 multiplier specifying function for degree axis" is valid, this function related to the command speed, monitor data, speed limit value, is shown below.

(1) Command speed

(a) Parameters

- "[Pr.7] Bias speed at start"
- "[Pr.46] HPR speed"
- "[Pr.47] Creep speed"
- "[Cd.14] New speed value"
- "[Cd.17] JOG speed"
- "[Cd.25] Position-speed switching control speed change register"
- "[Cd.28] Target position change value (New speed)"
- "[Cd.140] Command speed at speed control mode"
- "[Da.8] Command speed"

(b) Major positioning control

1) For "2 to 4 axis linear interpolation control" and "2 to 4 axis fixed-feed control", the positioning control is performed at decuple speed of command speed, when "[Pr.83] Speed control 10 x multiplier setting for degree axis" of reference axis is valid.

2) For "2 to 4 axis speed control", "[Pr.83] Speed control 10 x multiplier setting for degree axis" is evaluated whether it is valid for each axis. If valid, the positioning control will be performed at decuple speed of command speed.

(2) Monitor data

- "[Md.22] Speed command"
- "[Md.27] Current speed"
- "[Md.28] Axis speed command"
- "[Md.33] Target speed"
- "[Md.122] Speed during command"

*: For the above monitoring data, "[Pr.83] Speed control 10 x multiplier setting for degree axis" is evaluated whether it is valid for each axis. If valid, unit conversion value is changed ($\times 10^{-3} \rightarrow \times 10^{-2}$). The unit conversion table of monitor value is shown below.

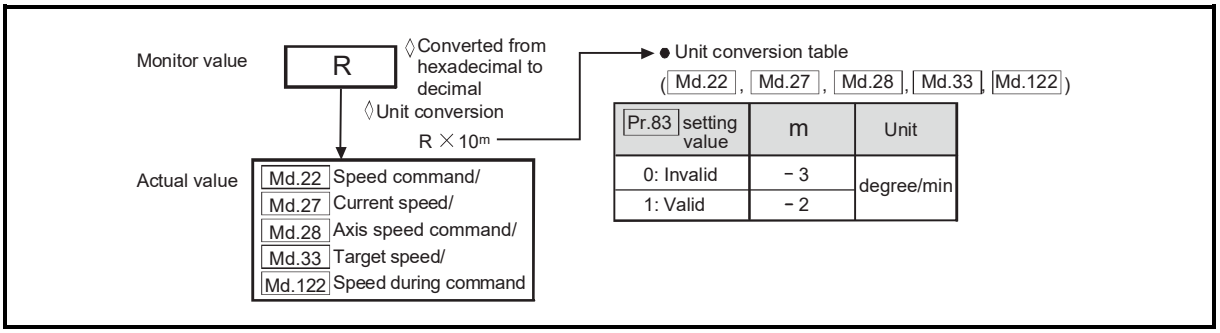

(3) Speed limit value

- "[Pr.8] Speed limit value"
- "[Pr.31] JOG speed limit value"
- "[Cd.146] Speed limit value at torque control mode"
- "[Cd.147] Speed limit value at continuous operation to torque control mode"

*: For the speed limit value, "[Pr.83] Speed control 10 x multiplier setting for degree axis" is evaluated whether it is valid for each axis. If valid, the positioning control will be performed at decuple speed of setting value (max. speed).

[2] Setting method of "Speed control 10 x multiplier setting for degree axis function"

Set "Valid/Invalid" by "[Pr.83] Speed control 10 x multiplier setting for degree axis".
Normally, the speed specification range is 0.001 to 2000000.000[degree/min], but it will be decupled and become 0.01 to 20000000.00[degree/min] by setting "[Pr.83] Speed control 10 x multiplier setting for degree axis" to valid.
To use the "Speed control 10 x multiplier setting for degree axis function", set the parameters shown in the following table.

Setting item		Setting value	Setting details	Buffer memory address	
				QD77MS2 QD77MS4	QD77MS16
[Pr.83]	Speed control 10 x multiplier setting for degree axis	→	Set the speed control 10 x multiplier setting for degree axis. 0: Invalid 1: Valid	63+150n	

n: Axis No.-1

∗: Refer to Section 5.2.4 "Detailed parameters 2" for details on the setting details.

13.7.11 Operation setting for incompletion of HPR function

The "Operation setting for incompletion of HPR function" is provided to select whether positioning control is operated or not, when HPR request flag is ON.

This section explains the "Operation setting for incompletion of HPR function" as follows:

[1] Control details
[2] Precautions during control
[3] Setting method of "Operation setting for incompletion of HPR function"

[1] Control details

When "[Pr.55] Operation setting for incompletion of HPR" is valid, this function related to the command speed, monitor data, speed limit value, is shown below.

Item	[Pr.55] Operation setting for incompletion of HPR	
	"0: Positioning control is not executed." and "HPR request flag ON"	"1: Positioning control is executed." and "HPR request flag ON"
• Machine HPR • JOG operation • Inching operation • Manual pulse generator operation • Current value changing using current value changing start No. (No. 9003).	○*1	○*1
When the following cases at block start, condition start, wait start, repeated start, multiple axes simultaneous start and pre-reading start. • 1-axis linear control • 2/3/4-axis linear interpolation control • 1/2/3/4-axis fixed-feed control • 2-axis circular interpolation control (with sub point designation/center point designation) • 1/2/3/4-axis speed control • Speed-position switching control (INC mode/ ABS mode) • Position-speed switching control • Current value changing using positioning data No. (No.1 to 600).	×	○*1
Control mode switching	×	○*1

○: Positioning start possible (Execution possible)
×: Positioning start impossible (Execution not possible)

*1: There may be restrictions in the operation for incompletion of HPR depending on the setting or specifications of the servo amplifier. Refer to the servo amplifier instruction manual or manual for details.

[2] Precautions during control

(1) The error "Start at HPR incomplete" (error code: 547) occurs if HPR request flag ([Md.31] Status: b3) is executed the positioning control by turning on, when "0: Positioning control is not executed" is selected the operation setting for incompletion of HPR setting, and positioning control will not be performed. At this time, operation with the manual control (JOG operation, inching operation, manual pulse generator operation) is available.

(2) When HPR request flag ([Md.31] Status: b3) is ON, starting Fast HPR will result in the error "HPR request ON" (error code: 207) despite the setting value of "[Pr.55] Operation setting for incompletion of HPR", and Fast HPR will not be performed.

[3] Setting method of "Operation setting for incompletion of HPR"

To use the "Operation setting for incompletion of HPR", set the following parameters using a sequence program.

Setting item		Setting value	Setting details	Buffer memory address	
				QD77MS2 QD77MS4	QD77MS16
[Pr.55]	Operation setting for incompletion of HPR	→	Set the operation setting for incompletion of HPR. 0: Positioning control is not executed. 1: Positioning control is executed.	87+150n	

n: Axis No.-1

∗: Refer to Section 5.2.6 "HPR detailed parameters" for details on the setting details.

13.8 Servo ON/OFF

13.8.1 Servo ON/OFF

This function executes servo ON/OFF of the servo amplifiers connected to the Simple Motion module.
By establishing the servo ON status with the servo ON command, servo motor operation is enabled.

The following two signals can be used to execute servo ON/OFF.

- All axis servo ON [Y1]
- [Cd.100] Servo OFF command (Buffer memory addresses: 1551+100n[QD77MS2/QD77MS4]/4351+100n[QD77MS16])

A list of the "All axis servo ON [Y1]" and "[Cd.100] Servo OFF command" is given below.

		[Cd.100] Servo OFF command			
		Setting value "0"		Setting value "1"	
			Command to servo amplifier		Command to servo amplifier
All axis servo ON: Y1	OFF	×	Servo ON command: OFF Ready ON command: OFF	×	Servo ON command: OFF Ready ON command: OFF
	ON	○	Servo ON command: ON Ready ON command: ON	×	Servo ON command: OFF Ready ON command: ON

○: Servo ON (Servo operation enabled) , ×: Servo OFF (Servo operation disabled)

POINT

When the delay time of "Electromagnetic brake sequence output (PC02)" is used, execute the servo ON to OFF by "[Cd.100] Servo OFF command". (When all axis servo ON [Y1] is turned ON to OFF, set "1" in "[Cd.100] Servo OFF command" and execute the servo OFF. Then, turn off [Y1] after delay time passes.)
Refer to the instruction manual or manual of each servo amplifier for details of servo ON command OFF and ready ON command OFF from Simple Motion module.

[1] Servo ON (Servo operation enabled)

The following shows the procedure for servo ON.

(1) Make sure that the servo amplifier LED indicates "b_".
(The initial value for "All axis servo ON [Y1]" is "OFF".)
(2) Set "0" for "[Cd.100] Servo OFF command".
(3) Turn ON "All axis servo ON [Y1]".
Now the servo amplifier turns ON the servo (servo operation enabled state).
(The servo amplifier LED indicates "d_".)

[2] Servo OFF (Servo operation disabled)

The following shows the procedure for servo OFF.

(1) Set "1" for "[Cd.100] Servo OFF command". (The servo amplifier LED indicates "c_".)
(If the "[Cd.100] Servo OFF command" set "0" again, after the servo operation enabled.)

(2) Turn OFF "All axis servo ON [Y1]".
(The servo amplifier LED indicates "b_".)

POINT

- If the servomotor is rotated by external force during the servo OFF status, follow up processing is performed.
- Change between servo ON or OFF status while operation is stopped (position control mode).
  The servo OFF command of during positioning in position control mode, manual pulse control, HPR, speed control mode, torque control mode and continuous operation to torque control mode will be ignored.
- When the servo OFF is given to all axes, "All axis servo ON [Y1]" is applied even if all axis servo ON command is turned ON to OFF with "[Cd.100] Servo OFF command" set "0".

13.8.2 Follow up function

(1) Follow up function

The follow up function monitors the number of motor rotations (actual position value) with the servo OFF and reflects the value in the command position value. If the servomotor rotates during the servo OFF, the servomotor will not just rotate for the amount of droop pulses at switching the servo ON next time, so that the positioning can be performed from the stop position.

(2) Execution of follow up

Follow up function is executed continually during the servo OFF status.

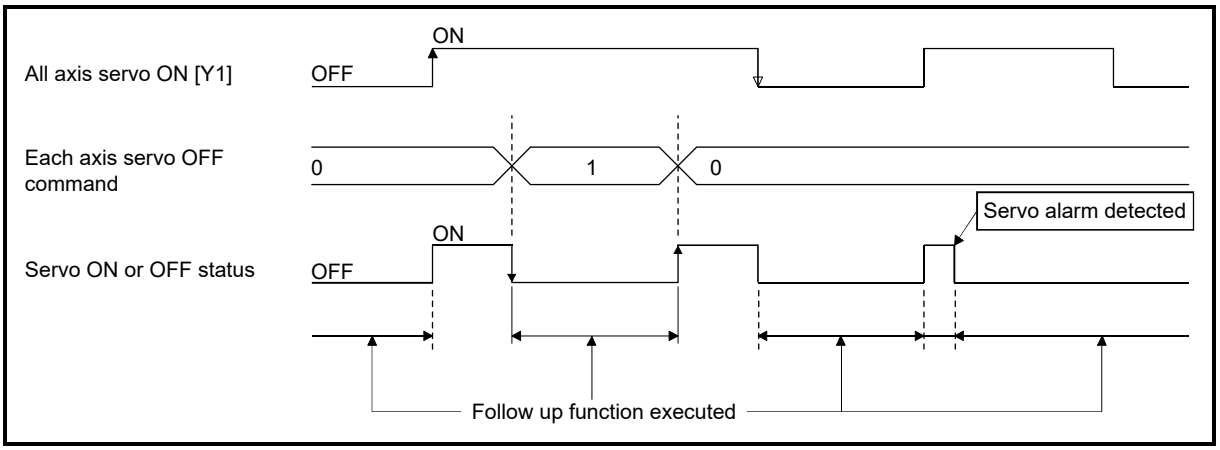

Fig. 13.52 Operation timings of follow up function

POINT

- The follow up function performs the process if the "Simple Motion module and the servo amplifier is turned ON" and "servo OFF" regardless of the presence of the absolute position system.

Chapter 14 Common Functions

The details and usage of the "common functions" executed according to the user's requirements are explained in this chapter.

Common functions include functions required when using the Simple Motion module, such as parameter initialization and execution data backup.
Read the setting and execution procedures for each common function indicated in this chapter thoroughly, and execute the appropriate function where required.

14.1 Outline of common functions 14- 2
14.2 Parameter initialization function 14- 4
14.3 Execution data backup function 14- 6
14.4 External signal selection function 14- 9
14.5 External I/O signal logic switching function 14- 15
14.6 History monitor function 14- 17
14.7 Amplifier-less operation function 14- 21
14.8 Virtual servo amplifier function 14- 28
14.9 Driver communication function 14- 32
14.10 Mark detection function 14- 40
14.11 Optional data monitor function 14- 52
14.12 Module error collection function 14- 58
14.13 Connect/disconnect function of SSCNET communication 14- 59
14.14 QD75MH initial value setting function 14- 65
14.15 Servo amplifier command value error check function 14- 67
14.16 Hot line forced stop function 14- 69

14.1 Outline of common functions

"Common functions" are executed according to the user's requirements, regardless of the control method, etc. These common functions are executed by GX Works2 or sequence programs.

The following table shows the functions included in the "common functions".

Common function	Details	Means	
		Sequence program	GX Works2
Parameter initialization function	This function returns the parameter stored in the buffer memory/internal memory and flash ROM/internal memory (nonvolatile) of Simple Motion module to the factory-set initial value.	○	○
Execution data backup function	This function writes the "execution data", currently being used for control, to the flash ROM/internal memory (nonvolatile).	○	○
External signal selection function	This function is used to select from the following signals when using the upper/lower limit signal, proximity dog signal, and stop signal. • External input signal of QD77MS • External input signal of servo amplifier • External input signal via CPU (the buffer memory of QD77MS)	○	○
External I/O signal logic switching function	This function switches I/O signal logic according to the equipment connected to the Simple Motion module. For the system in which with b-contact, upper limit switch, and lower limit switch are not used, the parameter logic setting can be controlled without wiring if it is changed to a "positive logic".	○	○
History monitor function	This function monitors start history, error history, warning history, and current value history of all axes.	—	○
Amplifier-less operation function	This function executes the positioning control of Simple Motion module without connecting to the servo amplifiers. It is used to debug the program at the start-up of the device or simulate the positioning operation.	○	—
Virtual servo amplifier function	This function executes the operation as the axis (virtual servo amplifier axis) that operates only command (instruction) virtually without servo amplifiers.	○	○
Driver communication function	This function uses the "Master-slave operation function" of servo amplifier. The Simple Motion module controls the master axis and the slave axis is controlled by data communication between servo amplifiers (driver communication) without Simple Motion module.	○	○
Mark detection function	This function is used to latch any data at the input timing of the mark detection signal (DI1 to DI4).	○	○
Optional data monitor function	This function is used to store the data selected by user up to 4 data per axis to buffer memory and monitor them.	○	○

Common function	Details	Means	
		Sequence program	GX Works2
Module error collection function	This function collects errors occurred in the Simple Motion module in the PLC CPU. Holding the error contents in the PLC CPU, this function enables to check the error history even after the PLC CPU in powered off or reset.	—	○
Connect/disconnect function of SSCNET communication	Temporarily connect/disconnect of SSCNET communication is executed during system's power supply ON. This function is used to exchange the servo amplifiers or SSCNETⅢ cables.	○	—
QD75MH initial value setting function	This function is used to set the factory-set initial value of QD75MH in the setting data set in the QD77MS buffer memory/internal memory and flash ROM/internal memory (nonvolatile).	○	—
Servo amplifier command value error check function	This function is used to check the position command value to be sent to the servo amplifier and the deviation counter value to be received from the servo amplifier, and check that there is no error in the operation of the Simple Motion module and servo amplifier.	○	○
Hot line forced stop function	This function is used to execute deceleration stop safety for other axes when the servo alarm occurs in the servo amplifier MR-JE-B.	○	○

14.2 Parameter initialization function

The "parameter initialization function" is used to return the setting data set in the buffer memory/internal memory and flash ROM/internal memory (nonvolatile) of Simple Motion module to their factory-set initial values.

The details shown below explain about the "parameter initialization function".
[1] Parameter initialization means
[2] Control details
[3] Precautions during control
[4] Parameter initialization method

[1] Parameter initialization means

- Initialization is executed with a sequence program.
- Initialization is executed by GX Works2.

Refer to the help in "Simple Motion Module Setting Tool" of GX Works2 for the execution method by GX Works2.

[2] Control details

The following table shows the setting data initialized by the "parameter initialization function".
(The data initialized are "buffer memory/internal memory" and "flash ROM/internal memory (nonvolatile)" setting data.)

Target area	
Parameters	Basic parameters
	Detailed parameters
	Home position return basic parameters
	Home position return detailed parameters
	Extended parameters
Servo parameters	Servo parameters ([Pr.100], PA, PB, PC, PD, PE, PS, PF, Po, PL)
Mark detection	Mark detection setting parameters
Synchronous control parameters	Servo input axis parameters
	Synchronous encoder axis parameters
	Command generation axis parameters
	Command generation axis positioning data
	Synchronous parameters
Positioning data	Positioning data (No.1 to 100)
	Positioning data (No.101 to 600)
Block start data	Block start data (block No.7000 to 7001)
	Condition data (block No.7000 to 7001)
	Block start data (block No.7002 to 7004)
	Condition data (block No.7002 to 7004)
Cam data	

[3] Precautions during control

(1) Parameter initialization is only executed when the positioning control is not carried out (when the PLC READY signal [Y0] is OFF).
The warning "In PLC READY" (warning code: 111) will occur if executed when the PLC READY signal [Y0] is ON.

(2) Writing to the flash ROM is up to 100,000 times. If writing to the flash ROM exceeds 100,000 times, the writing may become impossible, and the error "Flash ROM write error" (error code: 801) will occur.

(3) A "PLC CPU reset" or "PLC CPU power restart" must be carried out after the parameters are initialized.

(4) If an error occurs on the parameter set in the Simple Motion module when the PLC READY signal [Y0] is turned ON, the READY signal [X0] will not be turned ON and the control cannot be carried out.

Important

Parameter initialization takes about 10 seconds. (Up to 30 seconds are sometimes required.)
Do not turn the power ON/OFF or reset the PLC CPU during parameter initialization. If the power is turned OFF or the PLC CPU module is reset to forcibly end the process, the data backed up in the flash ROM/internal memory (nonvolatile) will be lost.

[4] Parameter initialization method

(1) Parameter initialization is carried out using the dedicated instruction "ZP.PINIT".
(Refer to Chapter 15 "Dedicated Instructions" for details.)

(2) Parameter initialization can also be carried out by the writing of the data shown in the table below to the buffer memory of Simple Motion module using the TO command/intelligent function device.
The initialization of the parameter is executed at the time point the data is written to the buffer memory of Simple Motion module.

Setting item		Setting value	Setting details	Buffer memory address	
				QD77MS2 QD77MS4	QD77MS16
[Cd.2]	Parameter initialization request	1	Set "1: Requests parameter initialization.".	1901	5901

*: Refer to Section 5.7 "List of control data" for details on the setting details.

When the initialization is complete, "0" will be set in "[Cd.2] Parameter initialization request" by the Simple Motion module automatically.

14.3 Execution data backup function

When the buffer memory data of Simple Motion module is rewritten from the PLC CPU, "the data backed up in the flash ROM/internal memory (nonvolatile)" of Simple Motion module may differ from "the execution data being used for control (buffer memory data)".
In this case, the execution data will be lost when the PLC power is turned OFF. (Refer to Chapter 7 "Memory Configuration and Data Process".)
The "execution data backup function" is used to back up the execution data by writing to the flash ROM/internal memory (nonvolatile). The data backed up will be written to the buffer memory when the power is turned ON next time.

POINT
When the Simple Motion module is replaced, all the data in the Simple Motion module including absolute position data can be backed up (read to) in the personal computer and restored to (written to) the Simple Motion module again by using the backup/restore function of GX Works2. Refer to the help in "Simple Motion Module Setting Tool" for details.

The details shown below explain about the "execution data backup function".
[1] Execution data backup (written to flash ROM) means
[2] Control details
[3] Precautions during control
[4] Execution data backup method

[1] Execution data backup (written to flash ROM) means

- The backup is executed with a sequence program.
- The data is written to the flash ROM by GX Works2.

Refer to the help in "Simple Motion Module Setting Tool" of GX Works2 for the flash ROM write method by GX Works2.

[2] Control details

The following shows the data that can be written to the flash ROM/internal memory (nonvolatile) using the "execution data backup function".

Target area	
Parameters	Basic parameters
	Detailed parameters
	Home position return basic parameters
	Home position return detailed parameters
	Extended parameters
Servo parameters	Servo parameters ([Pr.100], PA, PB, PC, PD, PE, PS, PF, Po, PL)
Mark detection	Mark detection setting parameters
Synchronous control parameters	Servo input axis parameters
	Synchronous encoder axis parameters
	Command generation axis parameters
	Command generation axis positioning data
	Synchronous parameters
Positioning data	Positioning data (No.1 to 100)
	Positioning data (No.101 to 600)
Block start data	Block start data (block No.7000 to 7001)
	Condition data (block No.7000 to 7001)
	Block start data (block No.7002 to 7004)
	Condition data (block No.7002 to 7004)

*: The cam data (cam storage area) is separately saved in the flash ROM/internal memory (nonvolatile). Therefore, it is not a target of the backup function.

[3] Precautions during control

(1) Data can only be written to the flash ROM when the positioning control is not carried out (when the PLC READY signal [Y0] is OFF).
The warning "In PLC READY" (warning code: 111) will occur if executed when the PLC READY signal [Y0] is ON.

(2) Writing to the flash ROM can be executed up to 100,000 times.
If writing to the flash ROM exceeds 100,000 times, the writing may become impossible, and in that case, the error "Flash ROM writing error" (error code: 801) will occur.

(3) After one power ON/PLC CPU reset operation, writing to the flash ROM using a sequence program is limited to up to 25 times.
If the 26th writing is executed, the error "Flash ROM write number error" (error code: 805) will occur. If this error occurs, carry out the error reset or power OFF→ON/PLC CPU reset operation again.
Refer to "[Md.19] Number of write accesses to flash ROM" of Section 5.1.9 "Types and roles of monitor data" for details.

Important

Do not turn the power ON/OFF or reset the PLC CPU during executing the flash ROM writing. If the power is turned OFF or the PLC CPU module is reset to forcibly end the process, the data backed up in the flash ROM/internal memory (nonvolatile) will be lost.

[4] Execution data backup method

(1) Execution data backup (writing to the flash ROM/internal memory (nonvolatile)) is carried out using the dedicated instruction "ZP.PFWRT". (Refer to Chapter 15 "Dedicated Instructions" for details.)

(2) Refer to Section 7.2 "Data transmission process" for the data transmission processing at the backup of the execution data.

(3) Execution data backup can also be carried out by the writing of the data shown in the table below to the buffer memory of Simple Motion module using the TO command/intelligent function device.
The writing to the flash ROM/internal memory (nonvolatile) is executed at the time point the data is written to the buffer memory of Simple Motion module.

Setting item		Setting value	Setting details	Buffer memory address	
				QD77MS2 QD77MS4	QD77MS16
[Cd.1]	Flash ROM write request	1	Set "1: Requests write access to flash ROM.".	1900	5900

*: Refer to Section 5.7 "List of control data" for details on the setting details.

When the writing to the flash ROM/internal memory (nonvolatile) is complete, "0" will be set in "[Cd.1] Flash ROM write request" by the Simple Motion module automatically.

14.4 External signal selection function

The "external signal selection function" is used to select from the following signals when using the upper/lower limit signal, proximity dog signal, and stop signal.
• External input signal of QD77MS
• External input signal of servo amplifier
• External input signal via CPU (buffer memory of QD77MS)

When the external input signal via CPU (the buffer memory of QD77MS) is used, the external input signal status of Simple Motion module can be operated by connecting the limit switch to input module and by operating the buffer memory of sequence program. When the external input signal via CPU (the buffer memory of QD77MS) is used, operation is affected by the PLC scan time.

The details shown below explain about the "External signal selection function".
[1] Parameter setting details
[2] Precautions during parameter setting
[3] Control details
[4] Program example

[1] Parameter setting details

The setting details of the "External signal selection function" are shown in the following table.

Setting item		Setting value	Setting details	Buffer memory address	
				QD77MS2 QD77MS4	QD77MS16
[Pr.80]	External input signal selection	QD77MS2 : 0 QD77MS4 : 0 QD77MS16: 1	Set the external signal selection. 0: External input signal of QD77MS QD77MS2 QD77MS4 1: External input signal of servo amplifier 2: Buffer memory of QD77MS 3: External input signal 1 of QD77MS QD77MS16 4: External input signal 2 of QD77MS QD77MS16 5: External input signal 3 of QD77MS QD77MS16 6: External input signal 4 of QD77MS QD77MS16	32+150n	

n: Axis No.-1

(1) When "0: External input signal of QD77MS", "3: External input signal 1 of QD77MS", "4: External input signal 2 of QD77MS", "5: External input signal 3 of QD77MS", or "6: External input signal 4 of QD77MS" is set, set the Pin No. of external input signal of QD77MS shown in the following table.

	Axis No. or signal No.	Pin No.	Signal name
QD77MS	Axis 1 QD77MS2 QD77MS4 External input signal 1 QD77MS16	1A3	DOG
		1A2	RLS
		1A1	FLS
		1A4	STOP
	Axis 2 QD77MS2 QD77MS4 External input signal 2 QD77MS16	1B3	DOG
		1B2	RLS
		1B1	FLS
		1B4	STOP
	Axis 3 QD77MS4 External input signal 3 QD77MS16	2A3	DOG
		2A2	RLS
		2A1	FLS
		2A4	STOP
	Axis 4 QD77MS4 External input signal 4 QD77MS16	2B3	DOG
		2B2	RLS
		2B1	FLS
		2B4	STOP

(2) When "1: External input signal of servo amplifier" is set, set the Pin No. of external input signal of servo amplifier shown in the following table.

∗: At MR-JE-B(F) use, refer to Appendix 6.5 "Connection with MR-JE-B(F)".

	Pin No.[*1]	Signal name
Servo amplifier	CN3-19 (DI3)	DOG
	CN3-12 (DI2)	RLS
	CN3-2 (DI1)	FLS
	Buffer memory[*2]	STOP

∗1: It is for MR-J4-_B_(-RJ) or MR-J5-_B_(-RJ). Refer to the servo amplifier instruction manual or manual for details.

∗2: The stop signal cannot be input from the external input signal of servo amplifier. To input the stop signal, set "[Cd.44] External input signal operation device". For setting details, refer to Section 5.7.1 "System control data".

(3) When "2: Buffer memory of QD77MS" is set, use the following control data to operate the external input signal (upper/lower limit signal, proximity dog signal and stop signal).

Setting item		Setting value	Setting details	Buffer memory address	
				QD77MS2 QD77MS4	QD77MS16
[Cd.44]	External input signal operation device	→	Set the status of the upper/lower limit signal, the proximity dog signal and the stop signal.	1928	5928 to 5931

*: Refer to Section 5.7 "List of control data" for details on the setting details.

[2] Precautions during parameter setting

(1) When the "3: External input signal 1 of QD77MS", "4: External input signal 2 of QD77MS", "5: External input signal 3 of QD77MS", or "6: External input signal 4 of QD77MS" is set in the QD77MS2/QD77MS4, the error "External input signal selection error" (error code: 936) occurs at turning the PLC READY signal [Y0] ON, and the READY signal [X0] is not turned ON.
Set "0: External input signal of QD77MS" to use the external input signal of QD77MS2/QD77MS4.

(2) When the "0: External input signal of QD77MS" is set in the QD77MS16, the error "External input signal selection error" (error code: 936) occurs at turning the PLC READY signal [Y0] ON, and the READY signal [X0] is not turned ON.
Set "3: External input signal 1 of QD77MS", "4: External input signal 2 of QD77MS", "5: External input signal 3 of QD77MS", or "6: External input signal 4 of QD77MS" to use the external input signal of QD77MS16.

[3] Control details

The following table shows the external signal that becomes valid by setting "[Pr.80] External input signal selection".

"[Pr.80] External input signal selection"	External signal that becomes valid
External input signal of QD77MS (Setting value: 0, 3, 4, 5, 6)	Upper/lower stroke limit signal : External input signal of QD77MS (FLS, RLS) Proximity dog signal : External input signal of QD77MS (DOG) Stop signal : External input signal of QD77MS (STOP) External command/switching signal: External input signal of QD77MS (DI)
External input signal of servo amplifier (Setting value: 1)	Upper/lower stroke limit signal : External input signal of servo amplifier (FLS, RLS) Proximity dog signal : External input signal of servo amplifier (DOG) Stop signal : External input signal of QD77MS (STOP) QD77MS2 QD77MS4 / Buffer memory of QD77MS (STOP) QD77MS16 External command/switching signal: External input signal of QD77MS (DI)
Buffer memory of QD77MS (Setting value: 2)	Upper/lower stroke limit signal : Buffer memory of QD77MS (FLS, RLS) Proximity dog signal : Buffer memory of QD77MS (DOG) Stop signal : Buffer memory of QD77MS (STOP) External command/switching signal: External input signal of QD77MS (DI)

[4] Program example

The following shows the program example that is used to operate "[Cd.44] External input signal operation device" of axis 1, axis 4, axis 8, and axis 16 using the limit switch connected to the input module when "2: Buffer memory of QD77MS" is set in "[Pr.80] External input signal selection".

■ System configuration

The following shows the system configuration that is used with the program example.

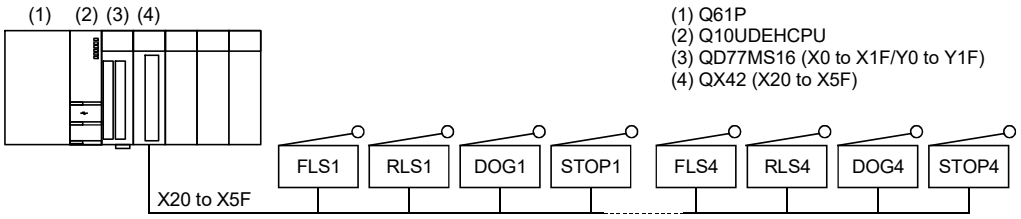

■ List of devices to be used

The following shows the device list that is used with the program example.

Device name	Device	Limit switch to be connected	Purpose	Description at device ON
External input (command)	X20	FLS 1	Axis1 FLS ON command	When "[Pr.22] Input signal logic selection" is negative logic: ON When "[Pr.22] Input signal logic selection" is positive logic: OFF
	X21	RLS 1	Axis1 RLS ON command	
	X22	DOG 1	Axis1 DOG ON command	
	X23	STOP 1	Axis1 STOP ON command	
	X24	FLS 2	Axis4 FLS ON command	
	X25	RLS 2	Axis4 RLS ON command	
	X26	DOG 2	Axis4 DOG ON command	
	X27	STOP 2	Axis4 STOP ON command	
	X28	FLS 3	Axis8 FLS ON command	
	X29	RLS 3	Axis8 RLS ON command	
	X2A	DOG 3	Axis8 DOG ON command	
	X2B	STOP 3	Axis8 STOP ON command	
	X2C	FLS 4	Axis16 FLS ON command	
	X2D	RLS 4	Axis16 RLS ON command	
	X2E	DOG 4	Axis16 DOG ON command	
	X2F	STOP 4	Axis16 STOP ON command	

■ Program example

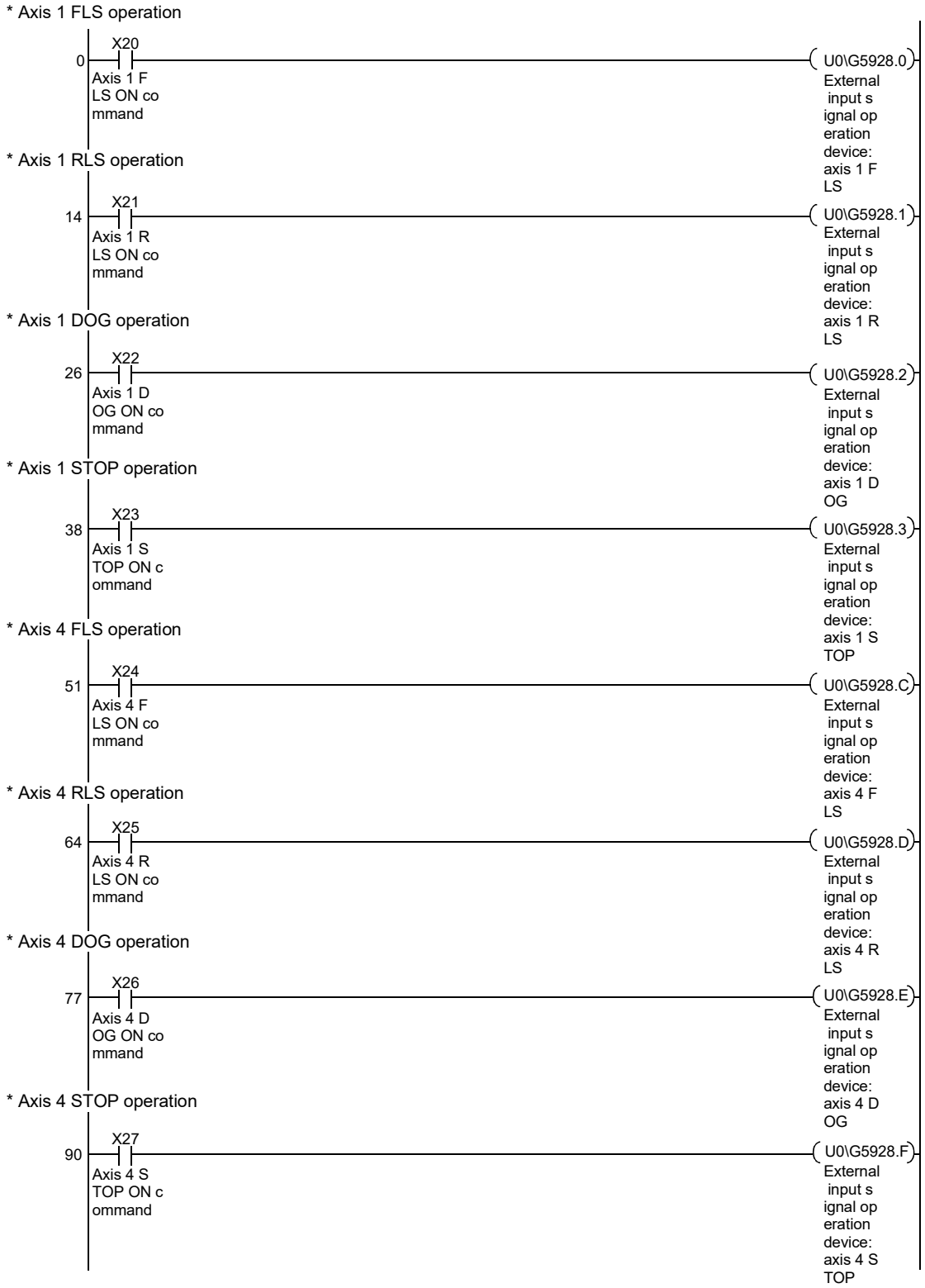

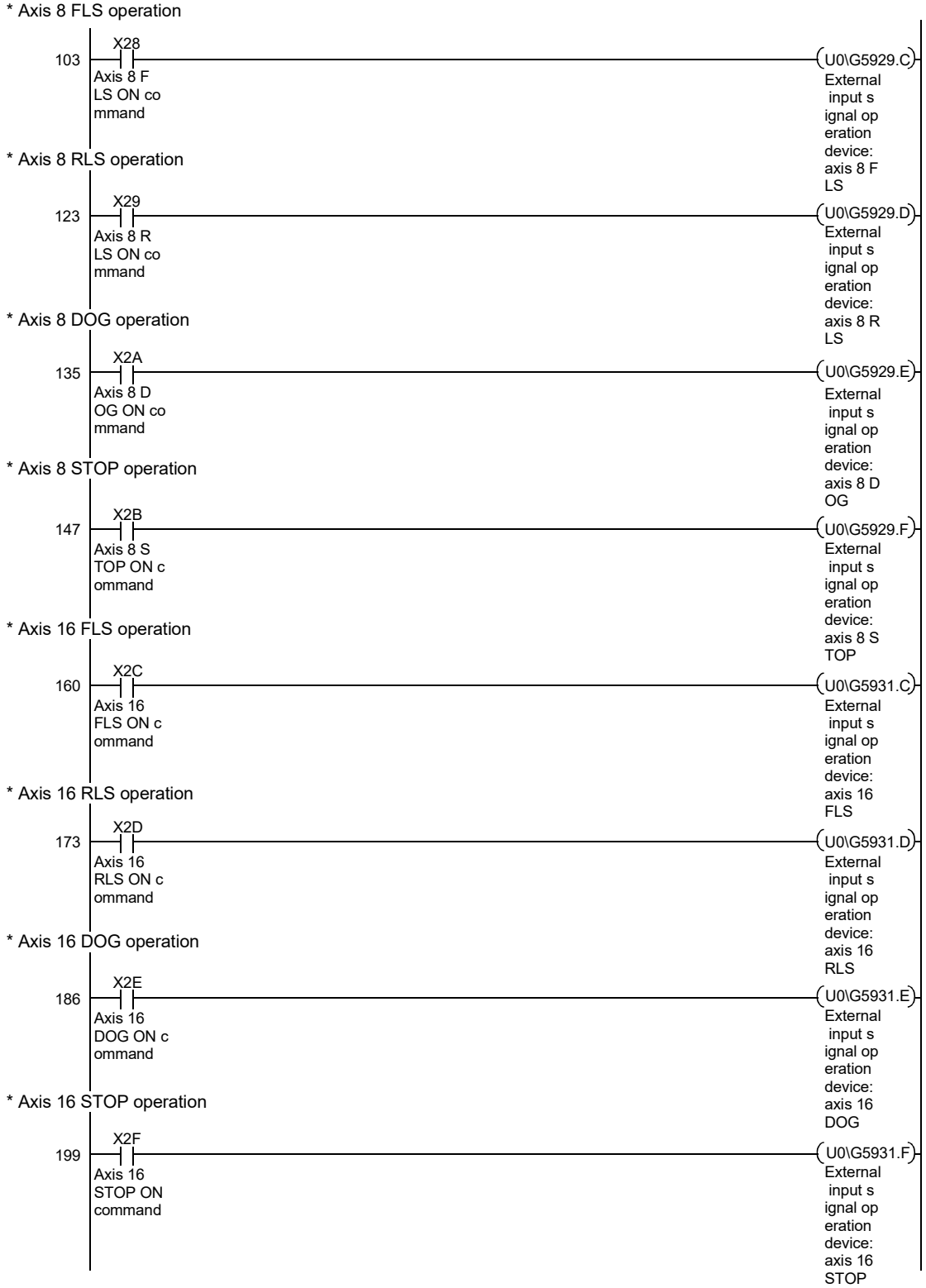
* Axis 8 FLS operation
103
X28
Axis 8 F LS ON co mmand
U0\G5929.C
External input s ignal op eration device: axis 8 F LS
* Axis 8 RLS operation
123
X29
Axis 8 R LS ON co mmand
U0\G5929.D
External input s ignal op eration device: axis 8 R LS
* Axis 8 DOG operation
135
X2A
Axis 8 D OG ON co mmand
U0\G5929.E
External input s ignal op eration device: axis 8 D OG
* Axis 8 STOP operation
147
X2B
Axis 8 S TOP ON c ommand
U0\G5929.F
External input s ignal op eration device: axis 8 S TOP
* Axis 16 FLS operation
160
X2C
Axis 16 FLS ON c ommand
U0\G5931.C
External input s ignal op eration device: axis 16 FLS
* Axis 16 RLS operation
173
X2D
Axis 16 RLS ON c ommand
U0\G5931.D
External input s ignal op eration device: axis 16 RLS
* Axis 16 DOG operation
186
X2E
Axis 16 DOG ON c ommand
U0\G5931.E
External input s ignal op eration device: axis 16 DOG
* Axis 16 STOP operation
199
X2F
Axis 16 STOP ON command
U0\G5931.F
External input s ignal op eration device: axis 16 STOP

14.5 External I/O signal logic switching function

This function switches the signal logic according to the following signals.
• External equipment connected to Simple Motion module
• [Cd.44] External input signal operation device
• External input signal of servo amplifier (upper/lower limit switch, proximity dog)

For the system in which b-contact, upper limit switch, and lower limit switch are not used, the parameter logic setting can be controlled without wiring if it is changed to a "positive logic".
When the upper limit switch, and lower limit switch are used, ensure to use them with negative logic (b-contact).

The details shown below explain about the "External I/O signal logic switching function".
[1] Parameter setting details
[2] Precautions on parameter setting

[1] Parameter setting details

To use the "External I/O signal logic switching function", set the parameters shown in the following table.

<table>
<tr><th colspan="2" rowspan="2">Setting item</th><th rowspan="2">Setting details</th><th rowspan="2">Factory-set initial value</th><th colspan="2">Buffer memory address</th></tr>
<tr><th>QD77MS2
QD77MS4</th><th>QD77MS16</th></tr>
<tr><td>[Pr.22]</td><td>Input signal logic selection</td><td>• Selection of logic of signals input from external device to Simple Motion module
<table><tr><td>b0</td><td>Lower limit</td><td rowspan="2">0: Negative logic,
1: Positive logic</td></tr><tr><td>b1</td><td>Upper limit</td></tr><tr><td>b2</td><td>Not used</td><td>Set "0".</td></tr><tr><td>b3</td><td>Stop signal</td><td>0: Negative logic,
1: Positive logic</td></tr><tr><td>b4</td><td>External command/ switching signal</td><td>0: Negative logic,
1: Positive logic</td></tr><tr><td>b5</td><td>Not used</td><td>Set "0".</td></tr><tr><td>b6</td><td>Proximity dog signal</td><td>0: Negative logic,
1: Positive logic</td></tr><tr><td>b7</td><td>Not used</td><td>Set "0".</td></tr><tr><td>b8</td><td>Manual pulse generator input ∗1</td><td>0: Negative logic,
1: Positive logic</td></tr><tr><td>b9 to b15</td><td>Not used</td><td>Set "0".</td></tr></table></td><td>0</td><td colspan="2">31+150n</td></tr>
</table>

n: Axis No.-1

∗1: Only the value specified against the axis 1 is valid for the logic selection of manual pulse generator input (b8).
∗: Refer to Section 5.2 "List of parameters" for the information on detail settings.

[2] Precautions on parameter setting

(1) The external I/O signal logic switching parameters are validated when the PLC READY signal [Y0] is turned OFF to ON. (The logic is negative right after power-on.)

(2) If the logic of each signal is set erroneously, the operation may not be carried out correctly.
Before setting, check the specifications of the equipment to be used.

(3) When the same external input signal is set to use to the multiple axes in "[Pr.80] External input signal selection" or "[Pr.95] External command signal selection" in the QD77MS16, "Input signal logic selection" of those axes should be the same. Otherwise, the error "Input signal logic selection setting error" (error code: 938) occurs when the PLC READY signal [Y0] is turned ON, and the READY signal [X0] will not be turned ON.

14.6 History monitor function

This function monitors start history, error history, warning history, and current history stored in the buffer memory of the Simple Motion module on the operation monitor of GX Works2.

[1] Start history

The start history logs of operations such as positioning operation, JOG operation, and manual pulse generator operation can be monitored. The latest history 16 logs are stored all the time. This function allows users to check the operation sequence (whether the operations have been started in a predetermined sequence) at system start-up.

For the start history check method, refer to the help in "Simple Motion Module Setting Tool" of GX Works2.

[2] Error history, warning history

The error and warning history logs can be monitored.
The latest history 16 logs are stored all the time.

For the error and warning history check method, refer to the help in "Simple Motion Module Setting Tool" of GX Works2.

POINT
Set the clock of PLC CPU. Refer to the "GX Works2 Version1 Operating Manual (Common)" for setting method.

[3] Current value history

The current value history data of each axis can be monitored. The following shows about the current value history data of each axis.

Monitor details	Monitor item
Latest backup data The number of backup: Once	Command position value
	Servo command value
	Encoder position within one revolution *2
	Encoder multiple revolution counter
	Time 1 (Year: month) *1
	Time 2 (Day: hour) *1
	Time 3 (Minute: second) *1
	Latest backup data pointer
Backup data at the power disconnection The number of backup: 4 times	Command position value
	Servo command value
	Encoder position within one revolution *2
	Encoder multiple revolution counter
	Time 1 (Year: month) *1
	Time 2 (Day: hour) *1
	Time 3 (Minute: second) *1
	Backup data pointer
Backup data at the power on The number of backup: 4 times	Command position value
	Servo command value
	Encoder position within one revolution *2
	Encoder multiple revolution counter
	Time 1 (Year: month) *1
	Time 2 (Day: hour) *1
	Time 3 (Minute: second) *1
	Error code at current value restoration
Home position return data The number of backup: Once	Command position value
	Servo command value
	Encoder position within one revolution *2
	Encoder multiple revolution counter
	Time 1 (Year: month) *1
	Time 2 (Day: hour) *1
	Time 3 (Minute: second) *1

*1: Displays a value set by the clock function of the CPU module.

*2: When MR-J5(W)-B is connected, the value is multiplied by the multiplicative inverse for the electronic gear ratio of the servo amplifier (command unit). The same data as MR-J4(W)-B can be stored by configuring the electronic gear setting of the servo amplifier.

■ Latest backup data

The latest backup data outputs the following data saved in the fixed cycle to the buffer memory.

- Command position value
- Servo command value
- Encoder position within one revolution *1
- Encoder multiple revolution counter
- Time 1 (Year: month) data
- Time 2 (Day: hour) data
- Time 3 (Minute: second) data
- Latest backup data pointer

*1: When MR-J5(W)-B is connected, the value is multiplied by the multiplicative inverse for the electronic gear ratio of the servo amplifier (command unit). The same data as MR-J4(W)-B can be stored by configuring the electronic gear setting of the servo amplifier.

The latest backup data starts outputting the data after the power on.
After the home position is established in the absolute system, the data becomes valid and outputs the current value.
The following servo amplifier and servo motor are connected artificially during amplifier-less operation. Therefore, the encoder position within one revolution and encoder multiple revolution counter made virtually by the command value are output.

[Pr.97] SSCNET setting	[Pr.100] Servo series	Servo amplifier type	Motor type (Resolution per servo motor rotation)
1: SSCNETⅢ/H	Other than "128: MR-J5-_B_(-RJ), MR-J5W_-_B (2-, 3-axis type)"	MR-J4-10B	HG-KR053 (4194304 pulses/rev)
	128: MR-J5-_B_(-RJ), MR-J5W_-_B (2-, 3-axis type)	MR-J5-10B	Rotary servo motor (4194304 pulses/rev)
0: SSCNETⅢ	Any	MR-J3-10B	HF-KP053 (262144 pulses/rev)

■ Backup data at the power disconnection

The detail of the latest backup data right before the power disconnection is output to the buffer memory.
The backup data at the power on starts being output after the power on.
The backup data at the power disconnection starts being output after the power on.
The detail of the latest backup data right before the power disconnection used in the absolute system setting is output, regardless of the setting of the absolute system or incremental system.
If the data has never been used in the absolute system in the incremental system setting, "0" is output in all storage items.

■ Backup data at the power on

After the power on, the detail of the data which restored the current value is output to the buffer memory.

The backup data at the power on starts being output after the power on.

If the current value cannot be restored in the absolute system, "0" is set to the command position value and servo command value.

The error "HPR data incorrect" (error code: 1201) is set in the error code at current value restoration.

When the incremental system is set, the detail of the backup data at the power on used in the absolute system setting is output. If the data has never been used in the absolute system, "0" is output in all storage items.

■ Home position return data

The following data saved at home position return completion to the buffer memory.

- Command position value at home position return completion
- Servo command value at home position return completion
- Encoder position within one revolution of absolute position reference point data *1
- Encoder multiple revolution counter of absolute position reference point data
- Time 1 (Year: month) data
- Time 2 (Day: hour) data
- Time 3 (Minute: second) data

*1: When MR-J5(W)-B is connected, the value is multiplied by the multiplicative inverse for the electronic gear ratio of the servo amplifier (command unit). The same data as MR-J4(W)-B can be stored by configuring the electronic gear setting of the servo amplifier.

The data becomes valid only when the absolute system is set.

If the data has never been used in the absolute system in the incremental system setting, "0" is output in all storage items.

14.7 Amplifier-less operation function

The positioning control of Simple Motion module without servo amplifiers connection can be executed in the amplifier-less function. This function is used to debug of user program or simulate of positioning operation at the start.

The details shown below explain about the "Amplifier-less operation function".
[1] Control details
[2] Restrictions
[3] Buffer memory list
[4] Operation mode switching procedure

[1] Control details

Switch the mode from the normal operation mode (with servo amplifier connection) to the amplifier-less operation mode (without servo amplifier connection) to use the amplifier-less operation function.
Operation for each axis without servo amplifier connection as the normal operation mode can be executed during amplifier-less operation mode. The start method of positioning control is also the same procedure of normal operation mode.
The normal operation (with servo amplifier connection) is possible by switching from the amplifier-less operation mode to the normal operation mode after amplifier-less operation.
The current value management (command position value, feed machine value) at the switching the normal operation mode and amplifier-less operation mode is shown below.

"Absolute position detection system (PA03)"	Current value management at the operation mode switching	
	Normal operation mode → Amplifier-less operation mode	Amplifier-less operation mode → Normal operation mode
"0: Disabled"	The command position value and feed machine value are "0".	The command position value and feed machine value are "0". (At the communication start to the servo amplifiers)
"1: Enabled"	The amplifier-less operation mode starts with the address that the servo amplifier's power supply was finally turned OFF. However, the HP is not established in the normal operation mode, the command position value and feed machine value are "0".	The command position value and feed machine value are restored according the actual position of servomotor. (At the communication start to the servo amplifiers) However, when the HP is not established in the normal operation mode before switching to the amplifier-less operation mode, the command position value and feed machine value are not restored. Execute the HPR. When the mode is switched to the normal operation mode after moving that exceeds the range "-2147483648(-2^{31}) to 2147483647(2^{31}-1) [PLS]" from the actual position of servo motor during amplifier-less operation mode, the command position value and feed machine value might be not restored correctly.

POINT

(1) Switch of the normal operation mode and amplifier-less operation mode is executed by the batch of all axes. Switch of the operation mode for each axis cannot be executed.

(2) Only axis that operated either the followings before switching to the amplifier-less operation mode becomes the connection status during amplifier-less operation.
- "[Pr.100] Servo series" is set, and then the written to flash ROM is executed. (Turn the power supply ON or PLC CPU reset after written to flash ROM.)
- "[Pr.100] Servo series" is set, and then the PLC READY signal is turned ON.) (Servo amplifier connection is unnecessary.)

(3) Suppose the following servo amplifier and servo motor are connected during amplifier-less operation mode.
- When "1: SSCNETⅢ/H" is set in "[Pr.97] SSCNET setting" and any value other than "128: MR-J5-_B_(-RJ), MR-J5W_-_B (2-, 3-axis type)" is set in "[Pr.100] Servo series"
  Servo amplifier type: MR-J4-10B
  Motor type: HG-KR053 (Resolution per servo motor rotation: 4194304PLS/rev)
- When "1: SSCNETⅢ/H" is set in "[Pr.97] SSCNET setting" and "128: MR-J5-_B_(-RJ), MR-J5W_-_B (2-, 3-axis type)" is set in "[Pr.100] Servo series"
  Servo amplifier type: MR-J5-10B
  Motor type: Rotary servo motor (Resolution per servo motor rotation: 4194304 PLS/rev)
- When "0: SSCNETⅢ" is set in "[Pr.97] SSCNET setting"
  Servo amplifier type: MR-J3-10B
  Motor type: HF-KP053 (Resolution per servo motor rotation: 262144PLS/rev)

[2] Restrictions

(1) Some monitor data differ from the actual servo amplifier during amplifier-less operation mode.

Storage item		Storage details	Buffer memory address	
			QD77MS2 QD77MS4	QD77MS16
[Md.102]	Deviation counter value	Always "0".	852+100n 853+100n	2452+100n 2453+100n
[Md.106]	Servo amplifier software No.	Always "0".	864+100n to 869+100n	2464+100n to 2469+100n
[Md.107]	Parameter error No.	Always "0".	870+100n	2470+100n
[Md.108]	Servo status	• Zero point pass (b0) : Always ON • Zero speed (b3) : Changed depending on the command speed • Speed limit (b4) : Always ON when other than "0" is set to the command torque at torque control mode. Otherwise, always OFF. • PID control (b8) : Always OFF	876+100n	2476+100n
		• READY ON(b0), Servo ON(b1): Changed depending on the all axis servo ON signal[Y1] and "[Cd.100] Servo OFF command". • Control mode (b2, b3) : Indicates control mode. • Gain switching (b4) : Always OFF • Fully closed loop control switching (b5): Always OFF • Servo alarm(b7) : Always OFF • In-position(b12) : Always ON • Torque limit(b13) : Changed depending on "[Md.104] Motor current value". (Refer to "Restrictions (2) and (3)" for details.) • Absolute position lost(b14) : Always OFF • Servo warning(b15) : Always OFF	877+100n	2477+100n
[Md.109]	Regenerative load ratio/ Optional data monitor output 1	Always "0".	878+100n	2478+100n
[Md.110]	Effective load torque/ Optional data monitor output 2	Always "0".	879+100n	2479+100n
[Md.111]	Peak torque ratio/ Optional data monitor output 3	Always "0".	880+100n	2480+100n
[Md.112]	Optional data monitor output 4	Always "0".	881+100n	2481+100n

n: Axis No.-1

(2) The operation of following function differs from the normal operation mode during amplifier-less operation mode.

Function	Operation
External signal selection function	When "1: External input signal of servo amplifier" is set in "[Pr.80] External input signal selection", the status of external signal at the amplifier-less operation mode start is shown below. • Upper/lower limit signal (FLS, RLS): ON • Proximity dog signal (DOG): OFF Change "[Md.30] External input signal" to change the signal status. (Refer to "Restrictions (3)" for details.) When "2: Buffer memory of QD77MS" is set in "[Pr.80] External input signal selection", the upper/lower limit signal (FLS, RLS) and proximity dog signal (DOG) follow the buffer memory status of Simple Motion module during amplifier-less operation mode.
Torque limit function	Turns ON/OFF torque limit ("[Md.108] Servo status" high-order buffer memory address: b13) depending on "[Md.104] Motor current value". (Refer to "Restrictions (3)" for details.)

(3) The operation of following monitor data differs from the normal operation mode during amplifier-less operation mode.

Storage item		Storage details	Buffer memory address	
			QD77MS2 QD77MS4	QD77MS16
[Md.30]	External input signal	When "1: External input signal of servo amplifier" is set in "[Pr.80] External input signal selection", the external input signal status can be operated by turning ON/OFF the "b0: Lower limit signal", "b1: Upper limit signal" or "b6: Proximity dog signal" during amplifier-less operation mode.	816+100n	2416+100n
[Md.104]	Motor current value	"0" is set at the amplifier-less operation mode start. The motor current value can be emulated by changing this monitor data in user side during amplifier-less operation mode.	856+100n	2456+100n

n: Axis No.-1

(4) When the power supply is turned OFF → ON or PLC CPU is reset during amplifier-less operation mode, the mode is switched to the normal operation mode.

(5) The operation of servo motor or the timing of operation cycle, etc. at the amplifier-less operation is different from the case where the servo amplifiers are connected at the normal operation mode. Confirm the operation finally with a real machine.

(6) The amplifier-less operation cannot be used in the test mode. Do not request to switch to the amplifier-less operation mode during test mode.

(7) The amplifier-less operation cannot be used in the fully closed loop system, linear servo or direct drive motor.

(8) Even if the PLC READY signal [Y0| is turned ON by changing "[Pr.100] Servo series" from "0: Servo series is not set" to other than "0", the setting does not become valid. (The axis connecting status remains disconnection.)

(9) The operation cannot be changed to amplifier-less operation when connected and not connected servo amplifier axes are mixed. Change to amplifier-less operation when all axes are connected, or disconnect all axes of the servo amplifier.

(10) The synchronous encoder via servo amplifier cannot be used during amplifier-less operation mode.

[3] Buffer memory list

The buffer memory used in the amplifier-less operation function is shown below.

(1) System control data

Setting item		Setting value	Setting details	Buffer memory address	
				QD77MS2 QD77MS4	QD77MS16
[Cd.137]	Amplifier-less operation mode switching request	→	Switch operation mode. ABCDh : Switch from the normal operation mode to the amplifier-less operation mode. 0000h : Switch from the amplifier-less operation mode to the normal operation mode	1926	5926

(2) System monitor data

Monitor item		Monitor value	Storage details	Buffer memory address	
				QD77MS2 QD77MS4	QD77MS16
[Md.51]	Amplifier-less operation mode status	→	Indicate the current operation mode. 0: Normal operation mode 1: Amplifier-less operation mode	1432	4232

[4] Operation mode switching procedure

(1) Switch from the normal operation mode to the amplifier-less operation mode

1) Stop all operating axes, and then confirm that the BUSY signal for all axes turned OFF.
2) Turn OFF the PLC READY signal [Y0].
3) Confirm that the READY signal [X0] turned OFF.
4) Set "ABCDh" in "[Cd.137] Amplifier-less operation mode switching request".
5) Confirm that "1: Amplifier-less operation mode" was set in "[Md.51] Amplifier-less operation mode status".

(2) Switch from the amplifier-less operation mode to the normal operation mode

1) Stop all operating axes, and then confirm that the BUSY signal for all axes turned OFF.
2) Turn OFF the PLC READY signal [Y0].
3) Confirm that the READY signal [X0] turned OFF.
4) Set "0000h" in "[Cd.137] Amplifier-less operation mode switching request".
5) Confirm that "0: Normal operation mode" was set in "[Md.51] Amplifier-less operation mode status".

(3) Operation chart

The following drawing shows the operation for the switching of the normal operation mode and amplifier-less operation mode

[QD77MS4 operation example]

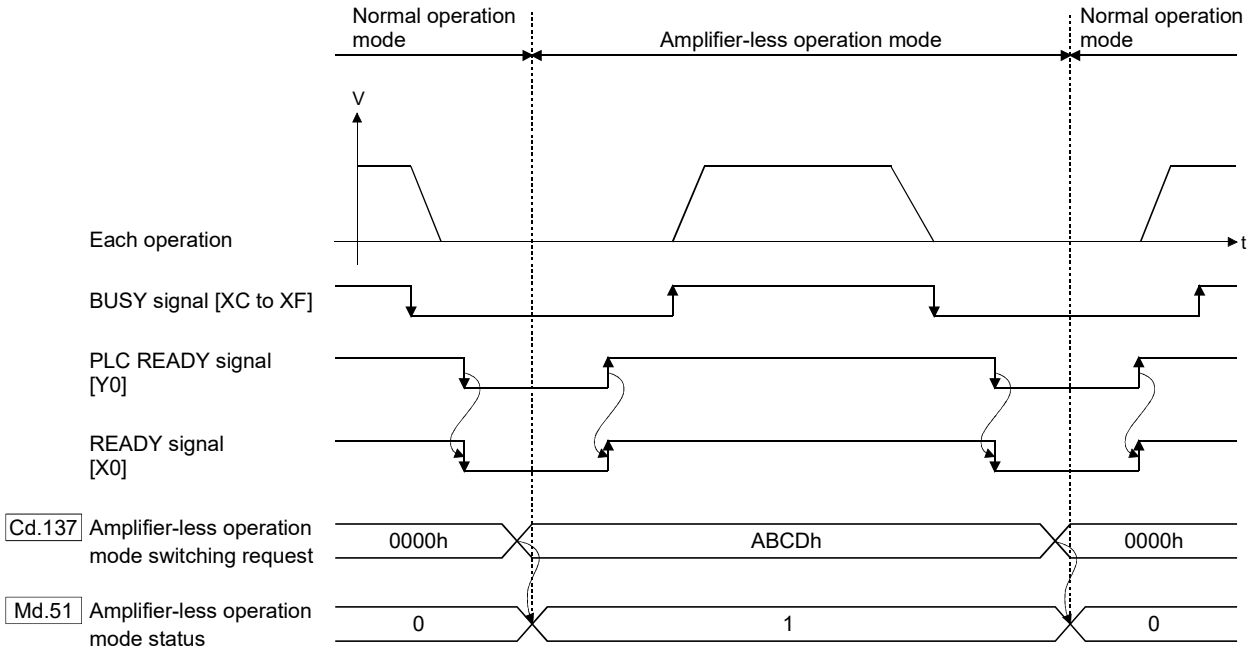

(Note): Refer to Section 3.3 for input/output signal of QD77MS16.

POINT

(1) Switch the "normal operation mode" and "amplifier-less operation mode" after confirming the all input signals except synchronization flag [X1] OFF. When switching the normal operation mode and amplifier-less operation mode in the status that any one of input signals except the synchronization flag [X1] is ON, the error "Error when switching from normal operation mode to amplifier-less operation mode" (error code: 808) or "Error when switching from amplifier-less operation mode to normal operation mode" (error code: 809) will occur, and the switching of operation mode will not execute.

(2) When the operation mode is switched with the servo amplifiers connected, the communication to the servo amplifiers is shown below.
- At switching from normal operation mode to amplifier-less operation mode: The communication for all axes during connection is disconnected. (The servo amplifier LED indicates "AA".)
- At switching from amplifier-less operation mode to normal operation mode: The communication to the servo amplifiers during connection is started.

(3) Even if the servo amplifiers are not connected, the switching of operation mode is possible.

(4) The forced stop is invalid regardless of the setting in "[Pr.82] Forced stop valid/invalid selection" during the amplifier-less operation mode.

(5) Only "0000h" and "ABCDh" are valid for the "[Cd.137] Amplifier-less operation mode switching request". The switching to amplifier-less operation mode can be accepted only when "[Cd.137] Amplifier-less operation mode switching request" is switched from "0000h" to "ABCDh". The switching to normal operation mode can be accepted only when "[Cd.137] Amplifier-less operation mode switching request" is switched from "ABCDh" to "0000h".

14.8 Virtual servo amplifier function

This function executes the operation virtually without connecting servo amplifiers (regarded as connected) by setting "4097, 4128, 4224" in servo parameter "[Pr.100] Servo series". The synchronous control with virtually input command is possible by using the virtual servo amplifier axis as servo input axis of synchronous control. Also, it can be used as simulation operation for axes without servo amplifiers.

Setting value of "[Pr.97] SSCNET setting"	Setting value of "[Pr.100] Servo series"
0: SSCNETⅢ	4097: Virtual servo amplifier (MR-J3)
1: SSCNETⅢ/H	4128: Virtual servo amplifier (MR-J4) 4224: Virtual servo amplifier (MR-J5)

The details shown below explain about the "Virtual servo amplifier function".
[1] Control details
[2] Restrictions

[1] Control details

(1) When "4097, 4128, 4224" is set in "[Pr.100] Servo series" set in the flash ROM, it operates as virtual servo amplifier immediately after power supply ON.

(2) When "0" is set in "[Pr.100] Servo series" set in the flash ROM, it operates as virtual servo amplifier by setting "4097, 4128, 4224" in "[Pr.100] Servo series" of buffer memory and by turning the PLC READY signal [Y0] OFF to ON after power supply ON.

(3) Do not connect the actual servo amplifier to axis set as virtual servo amplifier. If MR-J4(W)-B is connected, the LED display status remains "Ab." and the servo amplifier is not recognized. When MR-J5(W)-B is connected, the servo alarm "Connection mode error 1" (alarm No.: 3E.9) occurs and the servo amplifier is not recognized. If the power of MR-J5(W)-B is reset after the servo alarm occurs, the LED display status remains "Ab" and the servo amplifier is not recognized. The following servo amplifiers cannot be connected until the end station.

(4) The command position value and feed machine value of virtual servo amplifier are as follows.

(a) When the absolute position detection system is invalid
The both of command position value and feed machine value are set to "0".

(b) When the absolute position detection system is valid
HP is established: Address at latest power supply OFF
HP is not established: "0" (Command position value and feed machine value)

(5) When the virtual servo amplifier is set in the system setting of GX Works2, "0: Disabled (incremental system)" is set in "Absolute position detection system (PA03)".
Set "1: Enabled (absolute position detection system)" to the buffer memory to use as absolute position system.

POINT
Do not make to operate by switching between the actual servo amplifier and virtual servo amplifier. When a value except "0" is set in "[Pr.100] Servo series" set in the flash ROM, the servo series is not changed even if the "[Pr.100] Servo series" of buffer memory is changed after power supply ON and then the PLC READY signal [Y0] is turned OFF to ON. To change the servo series, write to the flash ROM and turn the power ON again or reset the PLC CPU.

[2] Restrictions

(1) The following monitor data of virtual servo amplifier differ from the actual servo amplifier.

Storage item		Storage details	Buffer memory address	
			QD77MS2 QD77MS4	QD77MS16
[Md.102]	Deviation counter value	Always "0".	852+100n 853+100n	2452+100n 2453+100n
[Md.106]	Servo amplifier software No.	Always "0".	864+100n to 869+100n	2464+100n to 2469+100n
[Md.107]	Parameter error No.	Always "0".	870+100n	2470+100n
[Md.108]	Servo status	• Zero point pass (b0) : Always ON • Zero speed (b3) : Changed depending on the command speed • Speed limit (b4) : Always ON when other than "0" is set to the command torque at torque control mode. Otherwise, always OFF. • PID control (b8) : Always OFF	876+100n	2476+100n
		• READY ON (b0), Servo ON (b1) : Changed depending on the all axis servo ON signal [Y1] and "[Cd.100] Servo OFF command" • Control mode (b2, b3) : Indicates control mode. • Gain switching (b4) : Always OFF • Fully closed loop control switching (b5): Always OFF • Servo alarm (b7) : Always OFF • In-position (b12) : Always ON • Torque limit (b13) : Changed depending on "[Md.104] Motor current value". (Refer to "Restrictions (2) and (3)" for details.) • Absolute position lost (b14) : Always OFF • Servo warning (b15) : Always OFF	877+100n	2477+100n
[Md.109]	Regenerative load ratio/Optional data monitor output 1	Always "0".	878+100n	2478+100n
[Md.110]	Effective load torque/Optional data monitor output 2	Always "0".	879+100n	2479+100n
[Md.111]	Peak torque ratio/Optional data monitor output 3	Always "0".	880+100n	2480+100n
[Md.112]	Optional data monitor output 4	Always "0".	881+100n	2481+100n

n: Axis No.-1

(2) The operation of the following function of virtual servo amplifier differs from the actual servo amplifier.

Function	Operation
External signal selection function	When "1: External input signal of servo amplifier" is set in "[Pr.80] External input signal selection", the external signal status immediately after power supply ON is shown below. • Upper/lower limit signal (FLS, RLS): ON • Proximity dog signal (DOG): OFF Change the signal status in "[Md.30] External input signal". (Refer to "Restrictions (3)" for details.) When "2: Buffer memory of QD77MS" is set in "[Pr.80] External input signal selection", the upper/lower limit signal (FLS, RLS) and the proximity dog signal (DOG) follow the buffer memory status of the Simple Motion module even in the virtual servo amplifier.
Torque limit function	Turns ON/OFF torque limit ("[Md.108] Servo status" high-order buffer memory address: b13) depending on "[Md.104] Motor current value". (Refer to "Restrictions (3)" for details.)

(3) The following monitor data of virtual servo amplifier differ from the actual servo amplifiers. The writing operation is possible in the virtual servo amplifier.

Storage item		Storage details	Buffer memory address	
			QD77MS2 QD77MS4	QD77MS16
[Md.30]	External input signal	When "1: External input signal of servo amplifier" is set in "[Pr.80] External input signal selection", the external input signal status can be operated by turning ON/OFF the following signals. • b0: Lower limit signal • b1: Upper limit signal • b6: Proximity dog signal	816+100n	2416+100n
[Md.104]	Motor current value	"0" is set after immediately power supply ON. The motor current value can be emulated by changing this monitor data in user side.	856+100n	2456+100n

n: Axis No.-1

14.9 Driver communication function

This function uses the "Master-slave operation function" of servo amplifier. The Simple Motion module controls master axis and the slave axis is controlled by data communication between servo amplifiers (driver communication) without Simple Motion module.

There are restrictions in the function that can be used by the version of servo amplifier. Refer to the instruction manual or manual of each servo amplifier for details.

The following shows the number of settable axes for the master axis and slave axis.

Network	Servo amplifier	Module	Combination of number of settable axes		Remark
			Master axis	Slave axis	
SSCNETⅢ	MR-J3-_B_ MR-J3-_BS_ MR-J3-_B_-RJ006 (Note-1)	QD77MS2	1 axis	1 axis or more/ 1 master axis	The axes other than the master axis and slave axis can be used as normal axis.
		QD77MS4	1 axis to 2 axes		
		QD77MS16	1 axis to 4 axes		
SSCNETⅢ/H	MR-J4-_B_ MR-J4-_B_-RJ MR-J5-_B_ MR-J5-_B_-RJ (Note-2) (Note-3)	QD77MS2	1 axis	1 axis or more/ 1 master axis	
		QD77MS4	1 axis to 2 axes		
		QD77MS16	1 axis to 8 axes		

(Note-1): The fully closed loop control servo amplifier can be set for the master axis only. It cannot be set for the slave axis.
(Note-2): In the fully closed loop system, the servo amplifier can be set for the master axis only. It cannot be set for the slave axis. Also, it cannot be used with the linear servo motors or direct drive motors. Refer to the instruction manual or manual of each servo amplifier for details.
(Note-3): When using MR-J5-_B_/MR-J5-_B_-RJ, set all the master and slave axes to be used in combination to MR-J5-_B_/MR-J5-_B_-RJ. If MR-J4-_B_/MR-J4-_B_-RJ is included, an error " Driver communication master axis servo series setting incorrect" (error code: 1005) will occur.

The details shown below explain about the "Driver communication function".

[1] Control details

[2] Precautions during control

[3] Servo parameter

[1] Control details

Set the master axis and slave axis in the servo parameter.
Execute each control of Simple Motion module for the master axis. (However, be sure to execute the servo ON/OFF of slave axis and error reset at servo alarm occurrence in the slave axis.) The servo amplifier set as master axis receives command (positioning command, speed command, torque command) from the Simple Motion module, and send the control data to the servo amplifier set as slave axis by driver communication between servo amplifiers.
The servo amplifier set as the slave axis is controlled with the control data transmitted from master axis by driver communication between servo amplifiers.

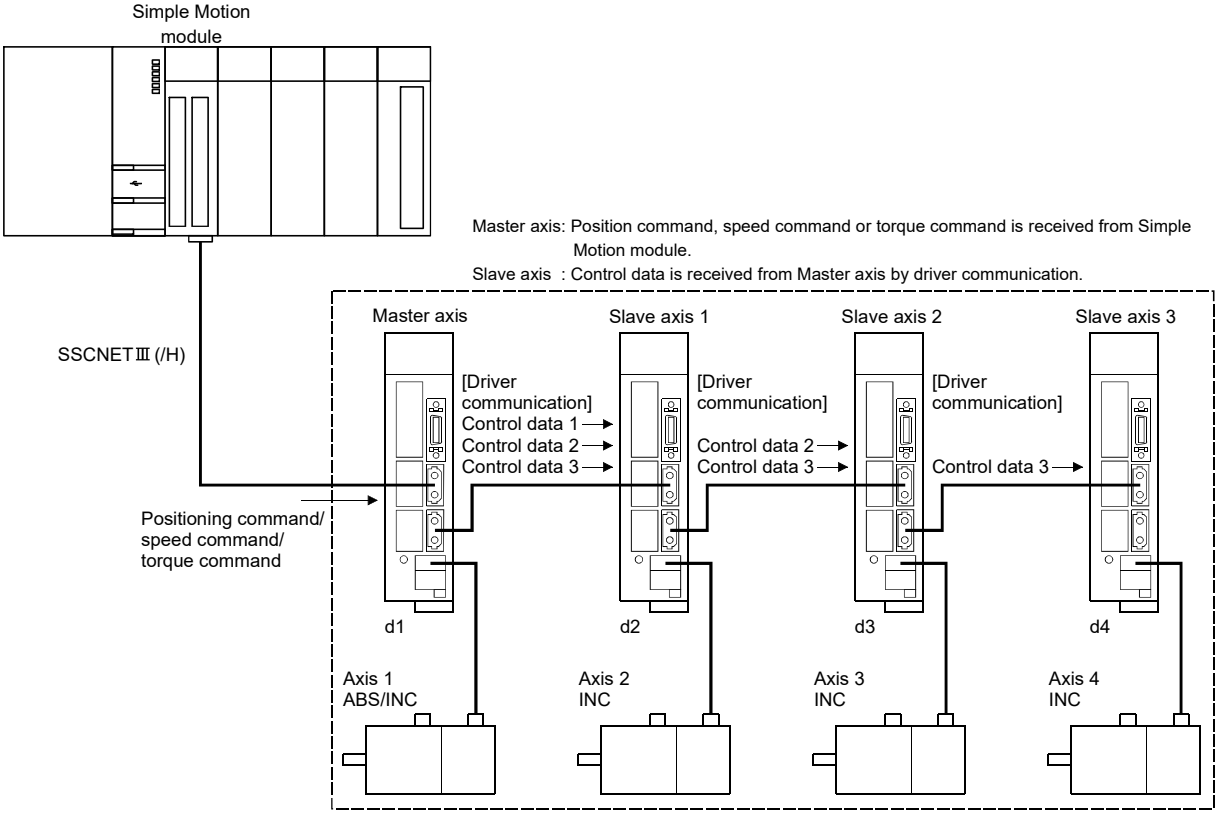

POINT

(1) When the communication is disconnected due to a fault in the servo amplifier, it is not possible to communicate with the axis after the faulty axis. Therefore, when connecting the SSCNETⅢ cable, connect the master axis in the closest position to the Simple Motion module.
(2) This function is used for the case to operate by multiple motors in one system. Connect the master axis and slave axis without slip.

[2] Precautions during control

⚠CAUTION

- In the operation by driver communication, the positioning control or JOG operation of the master axis is not interrupted even if the servo alarm occurs in the slave axis. Be sure to stop by user program.

(1) Servo amplifier

(a) Use the servo amplifiers compatible with the driver communication for the axis to execute the driver communication.

(b) The combination of the master axis and slave axis is set in the servo parameters. The setting is valid by turning ON or resetting the system's power supply after writing the servo parameters to the Simple Motion module.

(c) Check the operation enabled status of driver communication in "[Md.52] Communication between amplifiers axes searching flag". The operation cannot be changed to amplifier-less operation when connected and not connected servo amplifier axes are mixed. Change to amplifier-less operation when all axes are connected, or disconnect all axes of the servo amplifier.

(d) When connecting/disconnecting at driver communication function use, it can be executed only for the head axis (servo amplifier connected directly to the Simple Motion module). The servo amplifier other than the head axis can be disconnected, however it cannot be connected again.

(e) Differences between SSCNETⅢ connection and SSCNETⅢ/H connection in driver communication function are shown below.

	SSCNETⅢ	SSCNETⅢ/H
Communication with the servo amplifiers after controller's power supply ON	The servo amplifiers cannot be operated until the connection with all system setting axes is confirmed.	The servo amplifiers cannot be operated until the connection with all driver communication setting axes is confirmed. The normal operation axis (driver communication unset up axis) can be connected after the network is established.
Connect/ disconnect with servo amplifier	Only the first axis (servo amplifier connected directly to the Simple Motion module) can connect/disconnect. Servo amplifiers other than the first axis can be disconnected but cannot be connected.	Only the first axis (servo amplifier connected directly to the Simple Motion module) can connect/disconnect. Only normal axes (axes not set to driver communication) other than the first axis can be connected when they are disconnected. However, when axes set to driver communication are disconnected, they cannot communicate with servo amplifiers that were connected after disconnecting. (The servo amplifier's LED display remains "AA".)

(f) If all axes set to driver communication are not detected at the start of communication with the servo amplifier, all axes including independent axes cannot be operated. (The servo amplifier's LED display remains "Ab".) Check the operation enabled status with "[Md.52] Communication between amplifiers axes searching flag". When all independent axes and axes set to driver communication are connected, "0: Search end" is set in "[Md.52] Communication between amplifiers axes searching flag".

Monitor item		Monitor value	Storage details	Buffer memory address	
				QD77MS2 QD77MS4	QD77MS16
[Md.52]	Communication between amplifiers axes searching flag	→	The detection status of axis that set communication between amplifiers is stored. 0: Search end 1: Searching	1434	4234

(2) HPR control, positioning control, manual control, expansion control, and synchronous control

(a) Do not start the slave axis. The command to servo amplifier is invalid even if the slave axis is started.

(b) The HPR request flag ([Md.31] Status: b3) of slave axis is always ON. There is no influence for control of slave axis.

(c) There are some restrictions for data used as the positioning control of slave axis. The external input signals such as FLS or RLS, and the parameters such as software stroke limit are invalid.
Refer to this section (4) or (5) for details.

(d) For setting the slave axis as a servo input axis, set "2: Actual position value" or "4: Feedback value" in "[Pr.300] Servo input axis type". Otherwise, the slave axis does not operate as an input axis.

(e) At the driver communication operation, only the switching to positioning control mode, speed control mode, and torque control mode are possible. When the mode is switched to continuous operation to torque control mode for the master axis, the warning "Control mode switching not possible" (warning code: 125) will occur, and the control mode is not switched.

(3) Absolute position system

Set "0: Disabled (incremental system)" in "Absolute position detection system (PA03)" of servo parameter for slave axis. If "1: Enabled (absolute position detection system)" is set, the error "HPR data incorrect" (error code: 1201) will occur and the HPR of slave axis cannot be executed.

(4) I/O signals of slave axis

(a) Input signal

[QD77MS2]

Only the error detection signal [X8, X9] is valid. And only the servo alarm detection is valid. (The control of slave axis is not influenced even if the error other than servo alarm has been occurred.)

[QD77MS4]

Only the error detection signal [X8 to XB] is valid. And only the servo alarm detection is valid. (The control of slave axis is not influenced even if the error other than servo alarm has been occurred.)

[QD77MS16]

All signals cannot be used. The error detection signal turns ON "Error detection" ([Md.31] Status: b13).

(b) Output signal

All output signals of slave axis cannot be used.

(5) Data used for positioning control of slave axis

(a) Only the following axis monitor data are valid in slave axis.

Item		Remark
[Md.23]	Axis error No.	Valid for only servo alarm detection.
[Md.35]	Torque limit stored value/forward torque limit stored value	—
[Md.103]	Motor rotation speed	—
[Md.104]	Motor current value	—
[Md.107]	Parameter error No.	—
[Md.108]	Servo status	The following bit is valid. • b0: Zero point pass (Execute HPR to the master axis.)
		The following bits are valid. • b0: READY ON • b1: Servo ON • b7: Servo alarm (Note): The slave axis is always controlled in torque control mode, "control mode (high-order buffer memory address: b2, b3)" is set to torque control mode (0, 1).
[Md.109]	Regenerative load ratio/Optional data monitor output 1	—
[Md.110]	Effective load torque/Optional data monitor output 2	—
[Md.111]	Peak torque ratio/Optional data monitor output 3	—
[Md.112]	Optional data monitor output 4	—
[Md.114]	Servo alarm	—
[Md.120]	Reverse torque limit stored value	—

(b) Only the following axis control data are valid in slave axis.

Item		Remark
[Cd.5]	Axis error reset	Only servo alarm detection
[Cd.22]	New torque value/forward new torque value	—
[Cd.100]	Servo OFF command	—
[Cd.101]	Torque output setting value	—
[Cd.112]	Torque change function switching request	—
[Cd.113]	New reverse torque value	—

[3] Servo parameter

Set the following parameters for the axis to execute the driver communication.
(Refer to the instruction manual or manual of each servo amplifier for details.)

[MR-J3-_B_/MR-J3-_BS_/MR-J3-_B_-RJ006 use]

Setting item			Setting details	Buffer memory address	
				QD77MS2 QD77MS4	QD77MS16
Input/output setting	PA04	Forced stop deceleration function selection	Disable deceleration stop function at the master axis and slave axis.(Note-3)	30104+200n	28404+100n
	PD15	Driver communication setting	Set the master axis and slave axis.	30210+200n	Set with GX Works2
	PD16	Driver communication setting Master transmit data selection 1	Set the transmitted data at master axis setting.	30211+200n	
	PD17	Driver communication setting Master transmit data selection 2		30212+200n	
	PD20	Driver communication setting Master axis No. selection 1 for slave	Set the axis No. of master axis at slave axis setting.	30215+200n	
	PD30	Master-slave operation - Torque command coefficient on slave	Set the parameter at slave axis setting.	30225+200n	
	PD31	Master-slave operation - Speed limit coefficient on slave		30226+200n	
	PD32	Master-slave operation - Speed limit adjusted value on slave		30227+200n	

n: Axis No.-1

(Note-1): When the slave axis is not allocated for the master axis, the operation is normal operation only of master axis.
(Note-2): For QD77MS16, the above servo parameters are not allocated to the buffer memory. Write them to Simple Motion module with GX Works2.
(Note-3): At MR-J3-_B_/MR-J3-_B_-RJ006 use, it is not necessary to change the setting since the initial value is disabled. However, it is required to set disabled since the initial value is enabled at MR-J3-_BS_ use.

POINT

(1) The servo parameters are transmitted from Simple Motion module to servo amplifier after power supply ON or reset of PLC CPU. Execute flash ROM writing of Simple Motion module after writing the servo parameter to buffer memory, and then turn the power supply ON or reset the PLC CPU.
(2) The servo parameters for driver communication setting (PD15 to PD17, PD20) become valid by turning the servo amplifier's power supply OFF to ON. Turn the servo amplifier's power supply OFF to ON after executing the above (1). Then, turn the system's power supply ON again or reset the PLC CPU.
(3) In the driver communication function, the torque generation direction for slave axis can be set in "Rotation direction selection/travel direction selection (PA14)".

[MR-J4-_B_/MR-J4-_B_-RJ/MR-J5-_B_/MR-J5-_B_-RJ use]

Setting item			Setting details	Buffer memory address	
				QD77MS2 QD77MS4	QD77MS16
Input/output setting	PA04	Forced stop deceleration function selection	Disable deceleration stop function at the master axis and slave axis.	30104+200n	28404+100n
	PD15	Driver communication setting	Set the master axis and slave axis.	30210+200n	Set with GX Works2
	PD16	Driver communication setting Master transmit data selection 1	Set the transmitted data at master axis setting.	30211+200n	
	PD17	Driver communication setting Master transmit data selection 2		30212+200n	
	PD20	Driver communication setting Master axis No. selection 1 for slave	Set the axis No. of master axis at slave axis setting.	30215+200n	
	PD30	Master-slave operation - Torque command coefficient on slave	Set the parameter at slave axis setting.	30225+200n	
	PD31	Master-slave operation - Speed limit coefficient on slave		30226+200n	
	PD32	Master-slave operation - Speed limit adjusted value on slave		30227+200n	

n: Axis No.-1

(Note-1): When the slave axis is not allocated for the master axis, the operation is normal operation only of master axis.
(Note-2): For QD77MS16, the above servo parameters of PD_ are not allocated to the buffer memory. Write them to Simple Motion module with GX Works2.
(Note-3): At slave setting, set only "Driver communication setting Master axis No. selection 1 for slave (PD20)" in the master axis No. selection normally.

Since the servo parameters of MR-J5(W)-B are not in the buffer memory, use GX Works2 or axis control data to set them. Refer to "Appendix 6.6 Connection with MR-J5(W)-B" for details.

POINT

(1) The servo parameters are transmitted from Simple Motion module to servo amplifier after power supply ON or reset of PLC CPU. Execute flash ROM writing of Simple Motion module after writing the servo parameter to buffer memory, and then turn the power supply ON or reset the PLC CPU.
(2) The servo parameters for driver communication setting (PA04, PD15 to PD17, PD20) become valid by turning the servo amplifier's power supply OFF to ON. Turn the servo amplifier's power supply OFF to ON after executing the above (1). Then, turn the system's power supply ON or reset the PLC CPU.
(3) In the driver communication function, the torque generation direction for slave axis can be set in "Rotation direction selection/travel direction selection (PA14)".

14.10 Mark detection function

Any data can be latched at the input timing of the mark detection signal (DI1 to DI4). Also, only data within a specific range can be latched by specifying the data detection range.
The following three modes are available for execution of mark detection.

1) Continuous detection mode
The latched data is always stored to the first of mark detection data storage area at mark detection.

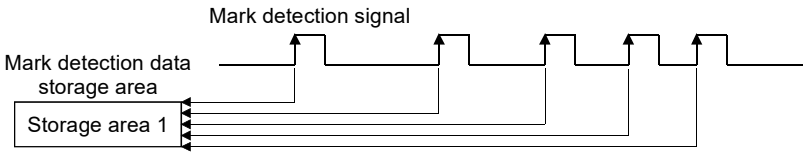

2) Specified number of detections mode
The latched data from a specified number of detections is stored.
The detected position for a specified number of detections can be collected when the mark detection signal is continuously input at high speed.

Example) Number of detections: 3

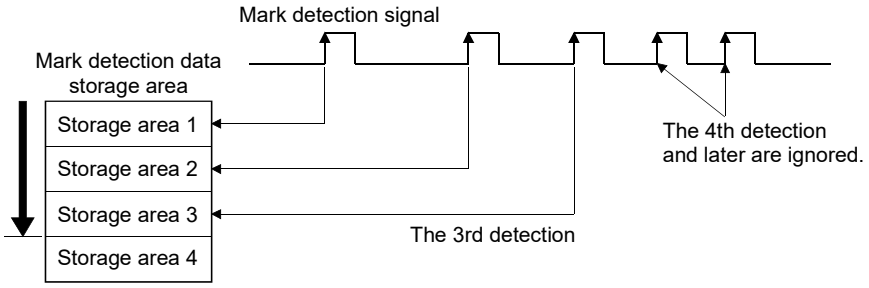

3) Ring buffer mode
The latched data is stored in a ring buffer for a specified number of detections.
The latched data is always stored at mark detection.

Example) Number of detections: 4

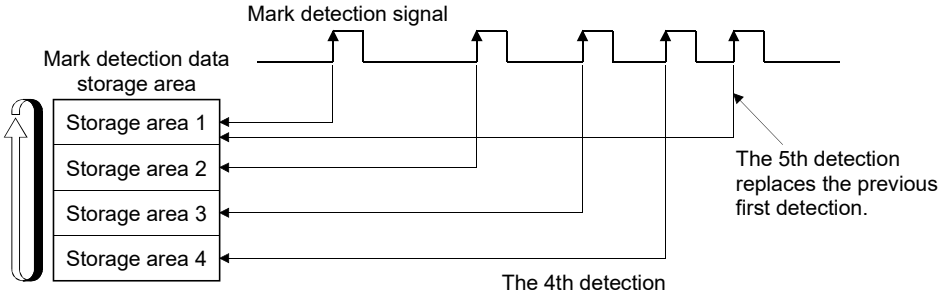

Item	Performance specifications		
	QD77MS2	QD77MS4	QD77MS16
Number of mark detection settings	Up to 4		Up to 16
Input signal	Axis 1 to Axis 2 External input signal (DI1 to DI2)	Axis 1 to Axis 4 External input signal (DI1 to DI4)	Axis 1 to Axis 16 External input signal (DI1 to DI4)
Input signal detection direction	Selectable for leading edge or trailing edge in logic setting of external input signal		
Input signal compensation time	Correctable within the range of -32768 to 32767μs		
Detection accuracy	10μs		
Latch data	11 types + Optional buffer memory data (2 word) (Command position value, Feed machine value, Actual position value, Servo input axis position value, Synchronous encoder axis position value, Synchronous encoder axis position value per cycle, Position value after composite main shaft gear, Position value per cycle after main shaft gear, Position value per cycle after auxiliary shaft gear, Cam axis position value per cycle, Cam axis position value per cycle (real position), Command position value of command generation axis, Position value per cycle of command generation axis)		
Number of continuous latch data storage	Up to 32		
Latched data range	Settable in the range of -2147483648 to 2147483647		

The details shown below explain about the "Mark detection function".

[1] Operation for mark detection function

[2] How to use mark detection function

[3] List of buffer memory

[4] Precautions

[1] Operation for mark detection function

Operations done at mark detection are shown below.

- Calculations for the mark detection data are estimated at leading edge/trailing edge of the mark detection signal.
  However, when the specified number of detections mode is set, the current number of mark detection is checked, and then it is judged whether to execute the mark detection.
- When a mark detection data range is set, it is first confirmed whether the mark detection data is within the range or not. Data outside the range are not detected.
- The mark detection data is stored in the mark detection data storage area according to the mark detection mode, and then the number of mark detection is updated.

(1) Continuous detection mode

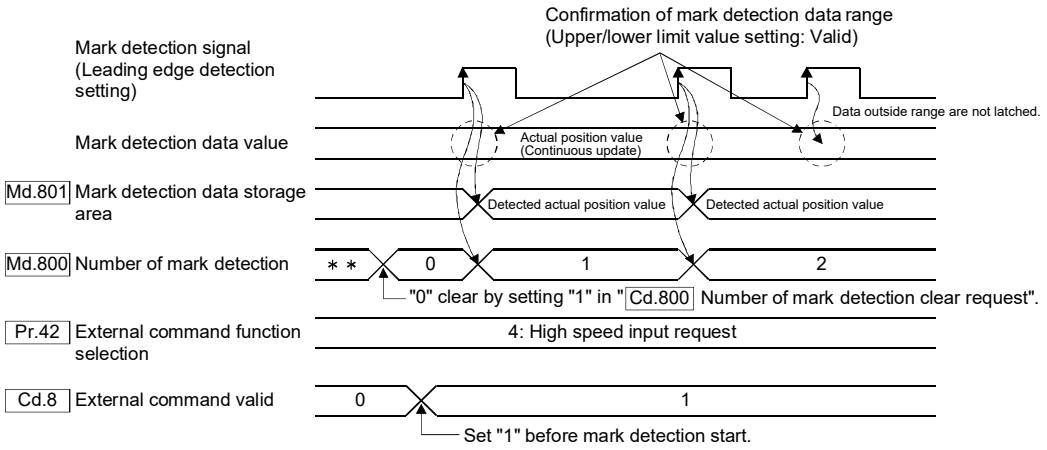

(2) Specified number of detection mode (Number of detections: 2)

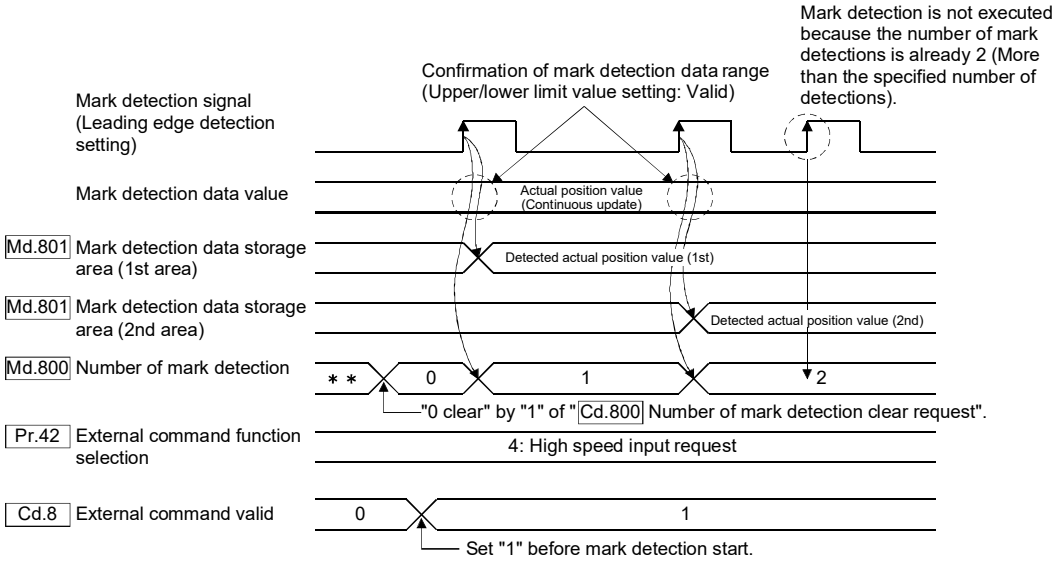

[2] How to use mark detection function

The following shows an example for mark detection by the external command signal (DI2) of axis 2.
The mark detection target is axis 1 actual position value, and the all range is detected in continuous detection mode.

(1) Allocate the input signal (DI2) to the external command signal of axis 2, and set the "high speed input request" for mark detection.

Setting item		Setting value	Setting details/setting value	Buffer memory address	
				QD77MS2 QD77MS4	QD77MS16
[Pr.95]	External command signal selection	2	Set "2: DI2" to the external command signal of axis 2.	—	219 (69+150n)
[Pr.42]	External command function selection	4	Set "4: High speed input request" as the function used in the external command signal of axis 2.	212 (62+150n)	

n: Axis No.-1

(2) Set the following mark detection setting parameters. The optional mark detection setting No. can be set.

Setting item		Setting value	Setting details/setting value	Buffer memory address	
				QD77MS2 QD77MS4	QD77MS16
[Pr.800]	Mark detection signal setting	2	Set "2: Axis 2" to the external input signal for mark detection.	54000+20k	
[Pr.801]	Mark detection signal compensation time	0	Set "0: (No compensation)" to the compensation time such as delay of sensor.	54001+20k	
[Pr.802]	Mark detection data type	2	Set "2: Actual position value" to the target data for mark detection.	54002+20k	
[Pr.803]	Mark detection data axis No.	1	Set "1: Axis 1" to the axis No. of target data for mark detection.	54003+20k	
[Pr.805]	Latch data range upper limit value	0	Set "0" to the valid upper limit value for latch data at mark detection. (Mark detection for all range is executed by setting the same value as lower limit value.)	54006+20k 54007+20k	
[Pr.806]	Latch data range lower limit value	0	Set "0" to the valid lower limit value for latch data at mark detection. (Mark detection for all range is executed by setting the same value as upper limit value.)	54008+20k 54009+20k	
[Pr.807]	Mark detection mode setting	0	Set "0: Continuous detection mode" to the mark detection mode.	54010+20k	

k: Mark detection setting No.-1

(3) Turn the power supply OFF or reset of PLC CPU to validate the setting parameters.

(4) The mark detection starts by setting "1: Validates an external command." in "[Cd.8] External command valid" of axis 2 with the sequence program.
Refer to "[Md.800] Number of mark detection" or "[Md.801] Mark detection data storage area" of mark detection setting No. set in this section (2) for the number of mark detections and mark detection data.

POINT

When "1: Valid" is set in "[Pr.114] External command signal compensation valid/invalid setting", the response time of the high-speed input signal is compensated and the latch accuracy will be enhanced.
(For details of "[Pr.114] External command signal compensation valid/invalid setting", refer to Section 5.2.7 "Expansion parameters".)

[3] List of buffer memory

The following shows the configuration of buffer memory for mark detection function.

Buffer memory address	Number of word	Item	Mark detection setting No.
54000 to 54019	20	Mark detection setting parameter [Pr.800] to [Pr.807]	Mark detection setting 1
54020 to 54039	20		Mark detection setting 2
54040 to 54059	20		Mark detection setting 3
to	to		to
54300 to 54319	20		Mark detection setting 16
54640 to 54649	10	Mark detection control data [Cd.800], [Cd.801], [Cd.802]	Mark detection setting 1
54650 to 54659	10		Mark detection setting 2
54660 to 54669	10		Mark detection setting 3
to	to		to
54790 to 54799	10		Mark detection setting 16
54960 to 55039	80	Mark detection monitor data [Md.800], [Md.801]	Mark detection setting 1
55040 to 55119	80		Mark detection setting 2
55120 to 55199	80		Mark detection setting 3
to	to		to
56160 to 56239	80		Mark detection setting 16

(Note): Refer to the table of "Performance specifications" in this section for the range of mark detection setting No. that can be used for each module.

• Guide to buffer memory address

In the buffer memory address, "k" in "54002+20k", etc. indicates a value corresponding to mark detection setting No. such as the following table.

Mark detection setting No.	k	Mark detection setting No.	k	Mark detection setting No.	k	Mark detection setting No.	k
1	0	5	4	9	8	13	12
2	1	6	5	10	9	14	13
3	2	7	6	11	10	15	14
4	3	8	7	12	11	16	15

(Note): Refer to the table of "Performance specifications" in this section for the range of mark detection setting No. that can be used for each module.

(Note): Calculate as follows for the buffer memory address corresponding to each mark detection setting No.

(Example) For mark detection setting 16

54002+20k ([Pr.802] Mark detection data type)=54002+20×15=54302

(Note): The range from mark detection setting No.1 to 4 (k=0 to 3) is valid in the QD77MS2/QD77MS4.

The following shows the buffer memory used in the mark detection function.

(1) Mark detection setting parameters

Setting item		Setting details/setting value	Default value	Buffer memory address	
				QD77MS2 QD77MS4	QD77MS16
[Pr.800]	Mark detection signal setting	Set the external input signal (high speed input request) for mark detection. 0 : Invalid 1 to 2 : External command signal of axis 1 to axis 2 (QD77MS2) 1 to 4 : External command signal of axis 1 to axis 4 (QD77MS4) 1 to 16 : External command signal of axis 1 to axis 16 (QD77MS16) Fetch cycle: Power supply ON	0	54000+20k	
[Pr.801]	Mark detection signal compensation time	Set the compensation time such as delay of sensor. Set a positive value to compensate for a delay. -32768 to 32767[μs] Fetch cycle: Power supply ON or PLC READY signal [Y0] OFF to ON	0	54001+20k	
[Pr.802]	Mark detection data type	Set the target data for mark detection. 0 to 14 : Data type -1 : Optional 2 word buffer memory Fetch cycle: Power supply ON	0	54002+20k	
[Pr.803]	Mark detection data axis No.	Set the axis No. of target data for mark detection. 1 to 2 : Axis 1 to axis 2 (QD77MS2) 1 to 4 : Axis 1 to axis 4 (QD77MS4) 1 to 16 : Axis 1 to axis 16 (QD77MS16) 801 to 804 : Synchronous encoder axis 1 to axis 4 201 to 202 : Command generation axis 1 to axis 2 (QD77MS2) 201 to 204 : Command generation axis 1 to axis 4 (QD77MS4) 201 to 208 : Command generation axis 1 to axis 8 (QD77MS16) Fetch cycle: Power supply ON	0	54003+20k	
[Pr.804]	Mark detection data buffer memory No.	Set the optional buffer memory No. Set this parameter as an even number. 0 to 65534: Optional buffer memory Fetch cycle: Power supply ON	0	54004+20k 54005+20k	
[Pr.805]	Latch data range upper limit value	Set the valid upper limit value for latch data at mark detection. -2147483648 to 2147483647 Fetch cycle: Power supply ON, PLC READY signal [Y0] OFF to ON, or latch data range change request	0	54006+20k 54007+20k	
[Pr.806]	Latch data range lower limit value	Set the valid lower limit value for latch data at mark detection -2147483648 to 2147483647 Fetch cycle: Power supply ON, PLC READY signal [Y0] OFF to ON, or latch data range change request	0	54008+20k 54009+20k	

Setting item		Setting details/setting value	Default value	Buffer memory address	
				QD77MS2 QD77MS4	QD77MS16
[Pr.807]	Mark detection mode setting	Set the continuous detection mode or specified number of detection mode. 0 : Continuous detection mode 1 to 32 : Specified number of detection mode (Set the number of detections.) -1 to -32 : Ring buffer mode (Set the value that made the number of buffers into negative value.) Fetch cycle: Power supply ON or PLC READY signal [Y0] OFF to ON	0	54010+20k	

k: Mark detection setting No.-1

POINT

The above parameters are valid with the value set in the flash ROM of the Simple Motion module when the power ON or the CPU module reset. Except for a part, the value is not fetched by turning the PLC READY signal ON from OFF. Therefore, write to the flash ROM after setting the value in the buffer memory to change.

[Pr.800] Mark detection signal setting

Set the input signal for mark detection.

0 : Invalid
1 to 2 : External command signal (DI) of axis 1 to axis 2 (QD77MS2)
1 to 4 : External command signal (DI) of axis 1 to axis 4 (QD77MS4)
1 to 16 : External command signal (DI) of axis 1 to axis 16 (QD77MS16)

If a value other than the above is set, the warning "Outside mark detection signal setting range" (warning code: 130) occurs and the target mark detection is not available.

Set "4: High speed input request" in "[Pr.42] External command function selection" and set "1: Validates an external command." in "[Cd.8] External command valid".

[Pr.801] Mark detection signal compensation time

Compensate the input timing of the mark detection signal.

Set this parameter to compensate such as delay of sensor input. (Set a positive value to compensate for a delay.)

[Pr.802] Mark detection data type

Set the data that latched at mark detection.

The target data is latched by setting "0 to 14". Set the axis No. in "[Pr.803] Mark detection data axis No.".

Optional 2 word buffer memory is latched by setting "-1". Set the buffer memory No. in "[Pr.804] Mark detection data buffer memory No.".

0 : Command position value
1 : Feed machine value
2 : Actual position value
3 : Servo input axis position value
6 : Synchronous encoder axis position value
7 : Synchronous encoder axis position value per cycle
8 : Position value after composite main shaft gear
9 : Position value per cycle after main shaft gear
10 : Position value per cycle after auxiliary shaft gear
11 : Cam axis position value per cycle
12 : Cam axis position value per cycle (Real position)
13 : Command position value of command generation axis
14 : Position value per cycle of command generation axis
-1 : Optional 2 words buffer memory

If a value other than the above is set, the warning "Outside mark detection data type setting range" (warning code: 131) occurs and the target mark detection is not available.

[Pr.803] Mark detection data axis No.

Set the axis No. of data that latched at mark detection.

<table>
<tr><th colspan="3">[Pr.802] Mark detection data type</th><th colspan="3">[Pr.803] Mark detection data axis No.</th></tr>
<tr><th>Setting value</th><th>Data name</th><th>Unit</th><th>QD77MS2</th><th>QD77MS4</th><th>QD77MS16</th></tr>
<tr><td>0</td><td>Command position value</td><td rowspan="4">10^{-1}[µm], 10^{-5}[inch], 10^{-5} [degree], [PLS]</td><td rowspan="4">1 to 2</td><td rowspan="4">1 to 4</td><td rowspan="4">1 to 16</td></tr>
<tr><td>1</td><td>Feed machine value</td></tr>
<tr><td>2</td><td>Actual position value</td></tr>
<tr><td>3</td><td>Servo input axis position value</td></tr>
<tr><td>6</td><td>Synchronous encoder axis position value</td><td rowspan="2">Synchronous encoder axis position unit</td><td colspan="3" rowspan="2">801 to 804</td></tr>
<tr><td>7</td><td>Synchronous encoder axis position value per cycle</td></tr>
<tr><td>8</td><td>Position value after composite main shaft gear</td><td>Main input axis position unit</td><td rowspan="5">1 to 2</td><td rowspan="5">1 to 4</td><td rowspan="5">1 to 16</td></tr>
<tr><td>9</td><td>Position value per cycle after main shaft gear</td><td rowspan="4">Cam axis cycle unit</td></tr>
<tr><td>10</td><td>Position value per cycle after auxiliary shaft gear</td></tr>
<tr><td>11</td><td>Cam axis position value per cycle</td></tr>
<tr><td>12</td><td>Cam axis position value per cycle (Real position) (Note)</td></tr>
<tr><td>13</td><td>Command position value of command generation axis</td><td rowspan="2">Command generation axis position unit</td><td rowspan="2">201 to 202</td><td rowspan="2">201 to 204</td><td rowspan="2">201 to 208</td></tr>
<tr><td>14</td><td>Position value per cycle of command generation axis</td></tr>
</table>

(Note): Cam axis position value per cycle that considered delay of the servo system.

If a value other than the above is set, the warning "Outside mark detection data axis No. setting range" (warning code: 132) occurs and the target mark detection is not available.

[Pr.804] Mark detection data buffer memory No.

Set the No. of optional 2 words buffer memory that latched at mark detection.
Set this No. as an even No.
If a value other than the above is set, the warning "Outside mark detection data buffer memory No. setting range" (warning code: 133) occurs and the target mark detection is not available.

[Pr.805] Latch data range upper limit value,
[Pr.806] Latch data range lower limit value

Set the upper limit value and lower limit value of the latch data at mark detection.
When the data at mark detection is within the range, they are stored in "[Md.801] Mark detection data storage area" (1 to 32) and the "[Md.800] Number of mark detection" is incremented by 1. The mark detection processing is not executed.

• Upper limit value > Lower limit value
The mark detection is executed when the mark detection data is "greater or equal to the lower limit value and less than the upper limit value".

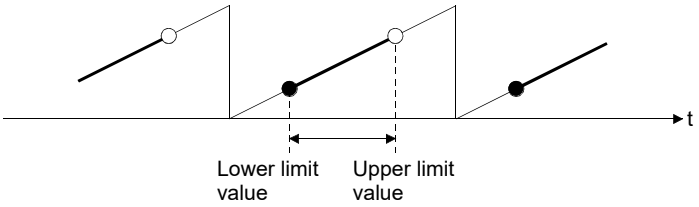

• Upper limit value < Lower limit value
The mark detection is executed when the mark detection data is "greater or equal to the lower limit value or less than the upper limit value".

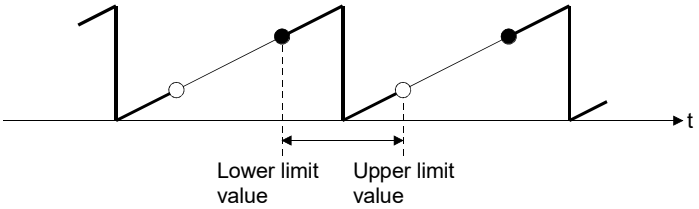

• Upper limit value = Lower limit value
The mark detection range is not checked. The mark detection is executed for all range.

[Pr.807] Mark detection mode setting

Set the data storage method of mark detection.

Mode	Setting value	Operation for mark detection	Mark detection data storage method
Continuous detection mode	0	Always	The data is updated in the mark detection data storage area 1.
Specified number of detection mode	1 to 32	Number of detections (If the number of mark detection is the number of detections or more, the mark detection is not executed.)	The data is stored to the mark detection data storage area "n". n = (1+ Number of mark detection)
Ring buffer mode	-1 to -32	Always (The mark detection data storage area 1 to 32 is used as a ring buffer for the number of detections.)	

(2) Mark detection control data

Setting item		Setting details/setting value	Default value	Buffer memory address	
				QD77MS2 QD77MS4	QD77MS16
[Cd.800]	Number of mark detection clear request	Set "1" to execute "0" clear of number of mark detections. "0" is automatically set after completion by "0" clear of number of mark detections. 1: 0 clear of number of mark detections Fetch cycle: Operation cycle	0	54640+10k	
[Cd.801]	Mark detection invalid flag	Set this flag to invalidate mark detection temporarily. 1 : Mark detection: Invalid Others : Mark detection: Valid Fetch cycle: Operation cycle	0	54641+10k	
[Cd.802]	Latch data range change request	Request the processing of latch data range change. Set the following value depending on the timing of updating the change value. 1: Change in the next Operation cycle of the requested 2: Change in the next DI input of the requested "0" is automatically set after the change is completed. Fetch cycle: Operation cycle or DI input	0	54642+10k	

k: Mark detection setting No.-1

[Cd.800] Number of mark detection clear request

Set "1" to execute "0" clear of "[Md.800] Number of mark detection". "0" is automatically set after completion by "0" clear of "[Md.800] Number of mark detection".

[Cd.801] Mark detection invalid flag

Set "1" to invalidate mark detection temporarily. The mark detection signal during invalidity is ignored.

[Cd.802] Latch data range change request

Request the processing of latch data range change. Set the following value depending on the timing of updating the change value.

1 : Change in the next Operation cycle of the requested
2 : Change in the next DI input of the requested

- "0" is automatically set after receiving the latch data range change request. (It indicates that the latch data range change is completed.)
- "[Pr.805] Latch data range upper limit value" and "[Pr.806] Latch data range lower limit value" at latch data range change request are used as the change value.
- Restrictions according to the type of latch data range change request are shown below.

Types of change request	[Cd.801] Mark detection invalid flag	Changing possibility
1: Change in the next Operation cycle of the requested	1 : Mark detection: Invalid	○
	Other than 1: Mark detection: Valid	
2: Change in the next DI input of the requested	1 : Mark detection: Invalid	×
	Other than 1: Mark detection: Valid	○

○: Possible, ×: Not possible

(3) Mark detection monitor data

Storage item		Storage details/storage value	Buffer memory address	
			QD77MS2 QD77MS4	QD77MS16
[Md.800]	Number of mark detection	The number of mark detections is stored. "0" clear is executed at power supply ON. Continuous detection mode: 0 to 65535 (Ring counter) Specified number of detection mode: 0 to 32 Ring buffer mode: 0 to (number of buffers - 1) Refresh cycle: At mark detection	54960+80k	
[Md.801]	Mark detection data storage area 1 to Mark detection data storage area 32	The latch data at mark detection is stored. Data for up to 32 times are stored in the specified number of detection mode. Data are stored as a ring buffer for number of detections in the ring buffer mode. -2147483648 to 2147483647 Refresh cycle: At mark detection	54962+80k, 54963+80k to 55024+80k, 55025+80k	

k: Mark detection setting No.-1

[Md.800] Number of mark detection

The counter value is incremented by 1 at mark detection. Preset "0" clear in "[Cd.800] Number of mark detection clear request" to execute the mark detection in specified number of detections mode or ring buffer mode.

[Md.801] Mark detection data storage area 1 to 32

The latch data at mark detection is stored. Data for up to 32 times can be stored in the specified number of detection mode or ring buffer mode.

[4] Precautions

When the data of "[Pr.802] Mark detection data type" or "[Pr.803] Mark detection data axis No." is selected incorrectly, the incorrect latch data is stored.
For the data of "[Pr.802] Mark detection data type", set the item No. instead of specifying the buffer memory No. directly.
When "8: Position value after composite main shaft gear" to "12: Cam axis position value per cycle (real position)" are set to "[Pr.802] Mark detection data type" and the mark detection is executed other than during synchronous control, the value different from the actual output monitor data may be latched.
If the operation cycle over occur before/after the mark detection signal input, the accuracy of estimation may decrease.

14.11 Optional data monitor function

The data of the registered monitor is refreshed every operation cycle.
This function is used to store the data (refer to following table) up to four points per axis to the buffer memory and monitor them.

The details shown below explain about the "Optional data monitor function".
[1] Data that can be set
[2] List of buffer memory

[1] Data that can be set

Data type		Unit	Used point	Monitoring possibility		
				MR-J3(W)-B	MR-J4(W)-B/ MR-JE-B(F)	MR-J5(W)-B
1	Effective load ratio	[%]	1 word	○	○	○
2	Regenerative load ratio	[%]		○	○	○
3	Peak load ratio	[%]		○	○	○
4	Load inertia moment ratio	[×0.1]		○	○	○
5	Model loop gain	[rad/s]		○	○	○
6	Bus voltage	[V]		○	○	○
7	Servo motor speed	[r/min]		○	○	○
8	Encoder multiple revolution counter	[rev]		○	○	○
9	Unit power consumption	[W]		—	○	○
10	Instantaneous torque	[×0.1%]		—	○	○
12	Servo motor thermistor temperature	[°C]		○	○	○
13	Torque Equivalent to Disturbance	[×0.1%]		—	○	○
14	Overload alarm margin	[×0.1%]		—	○	○
15	Excessive error alarm margin	[×16PLS]		—	○	○ (Note-2)
16	Settling time	[ms]		—	○	○
17	Overshoot amount	[PLS]		—	○	○ (Note-2)
18	Internal temperature of encoder	[°C]		—	○	○
20	Position feedback	[PLS]	2 words	○	○	○ (Note-2)
21	Encoder position within one revolution	[PLS]		○	○	○ (Note-2)
22	Selected droop pulse	[PLS]		○	○	○ (Note-2)
23	Unit total power consumption	[Wh]		—	○	○
24	Load-side encoder information 1	[PLS]		○ (Note-5)	○ (Note-5), (Note-6)	○ (Note-5), (Note-6)
25	Load-side encoder information 2	—		○ (Note-5)	○ (Note-5), (Note-6)	○ (Note-5), (Note-6)
26	Z-phase counter	[PLS]		—	○ (Note-4)	○ (Note-2), (Note-4)

Data type		Unit	Used point	Monitoring possibility		
				MR-J3(W)-B	MR-J4(W)-B/ MR-JE-B(F)	MR-J5(W)-B
27	Servo motor side /load-side position deviation	[PLS]	2 words	—	○ (Note-5)	○ (Note-2), (Note-5)
28	Servo motor side/load-side speed deviation	[×0.01r/min]		—	○ (Note-5)	○ (Note-5)
30	Unit power consumption (2 words)	[W]		—	○	○
Most significant bit + Address value	Optional address of registered monitor	—	—	○	○	○

○: Possible, — : Not possible ("0" is stored.)

(Note-1): The motor rotation speed that took the average every 227[ms].
Use the servo amplifiers of version compatible with the monitor of motor speed.
Always "0" if the monitor is executed for the servo amplifier which does not support this function.

(Note-2): The value is multiplied by the multiplicative inverse for the electronic gear ratio of the servo amplifier (command unit). The same data as MR-J4(W)-B can be stored by configuring the electronic gear setting of the servo amplifier.

(Note-3): The data set to "Droop pulse monitor selection for controller display" of "Fully closed loop function selection 3 (PE10)" is monitored.

(Note-4): It can be monitored when using the linear servo motors.

(Note-5): It can be monitored when using the fully closed control.

(Note-6): It can be monitored when using the synchronous encoder via servo amplifier.

Refer to the instruction manual or manual of each servo amplifier for details of the data monitored.

[2] List of buffer memory

The buffer memory used in the registered monitor of the optional data monitor function is shown below.

(1) Expansion parameter

<table>
<tr><th colspan="2" rowspan="2">Setting item</th><th rowspan="2">Setting details/setting value</th><th colspan="2">Buffer memory address</th></tr>
<tr><th>QD77MS2
QD77MS4</th><th>QD77MS16</th></tr>
<tr><td>[Pr.91]</td><td>Optional data monitor: Data type setting 1</td><td rowspan="4">• Set the data type monitored in optional data monitor function every data type setting. (Refer to this section [1])
• When "0: No setting" is set, the stored value of "[Md.109] Regenerative load ratio/Optional data monitor output 1" to "[Md.112] Optional data monitor output 4" is different every data type setting 1 to 4. (Refer to (2))
• Optional address of registered monitor specification
It switches whether to specify a registration monitor address directly for each data type setting of optional data monitor. Use the optional address of registered monito to acquire data other than the ones selectable in each connection device. For details, contact a manufacturer of connection devices.
 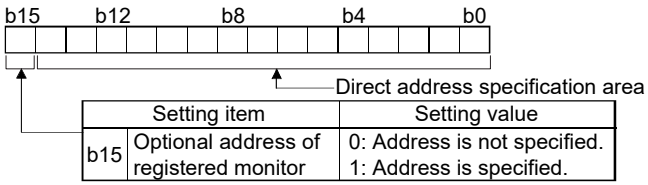

<table>
<tr><th colspan="2">Setting item</th><th>Setting value</th></tr>
<tr><td>b15</td><td>Optional address of registered monitor</td><td>0: Address is not specified.
1: Address is specified.</td></tr>
</table></td><td colspan="2">100+150n</td></tr>
<tr><td>[Pr.92]</td><td>Optional data monitor: Data type setting 2</td><td colspan="2">101+150n</td></tr>
<tr><td>[Pr.93]</td><td>Optional data monitor: Data type setting 3</td><td colspan="2">102+150n</td></tr>
<tr><td>[Pr.94]</td><td>Optional data monitor: Data type setting 4</td><td colspan="2">103+150n</td></tr>
</table>

n: Axis No.-1

POINT

(1) The monitor address of optional data monitor is registered to servo amplifier with initialized communication after power supply ON or PLC CPU reset.

(2) Set the data type of "used point: 2 words" in "[Pr.91] Optional data monitor: Data type setting 1" or "[Pr.93] Optional data monitor: Data type setting 3". If it is set in "[Pr.92] Optional data monitor: Data type setting 2" or "[Pr.94] Optional data monitor: Data type setting 4", the warning "Optional data monitor data type setting error" (warning code: 116) will occur with initialized communication to servo amplifier, and "0" is set in [Md.109] to [Md.112].

(3) Set "0" in "[Pr.92] Optional data monitor: Data type setting 2" when the data type of "used point: 2 words" is set in "[Pr.91] Optional data monitor: Data type setting 1", and set "0" in "[Pr.94] Optional data monitor: Data type setting 4" when the data type of "used point: 2 words" is set in "[Pr.93] Optional data monitor: Data type setting 3". When other than "0" is set, the warning "Optional data monitor data type setting error" (warning code: 116) will occur with initialized communication to servo amplifier, and "0" is set in [Md.109] to [Md.112].

(4) When the data type of "used point: 2 words" is set, the monitor data of low-order is "[Md.109] Regenerative load ratio/Optional data monitor output 1" or "[Md.111] Peak torque ratio/Optional data monitor output 3".

(5) When directly specifying addresses for each optional data monitor type, specify the addresses in bits 0 to 14 of "[Pr.91] Optional data monitor: Data type setting 1" to "[Pr.94] Optional data monitor: Data type setting 4", and set "1" in bit 15.

(6) When monitoring 2-word data, set the lower data to "[Pr.91] Optional data monitor: Data type setting 1" and the upper data to "[Pr.92] Optional data monitor: Data type setting 2", or the lower data to "[Pr.93] Optional data monitor: Data type setting 3" and the upper data to "[Pr.94] Optional data monitor: Data type setting 4".

(7) Refer to this Section "[1] Data that can be set" for the data type that can be monitored on each servo amplifier. When the data type that cannot be monitored is set, "0" is stored to the monitor output.

(2) Axis monitor data

Storage item		Storage details/storage value	Buffer memory address	
			QD77MS2 QD77MS4	QD77MS16
[Md.109]	Regenerative load ratio/Optional data monitor output 1	• The content set in "[Pr.91] Optional data monitor: Data type setting 1" is stored at optional data monitor data type setting. • The regenerative load ratio is stored when nothing is set.	878+100n	2478+100n
[Md.110]	Effective load torque/Optional data monitor output 2	• The content set in "[Pr.92] Optional data monitor: Data type setting 2" is stored at optional data monitor data type setting. • The effective load ratio is stored when nothing is set.	879+100n	2479+100n
[Md.111]	Peak torque ratio/Optional data monitor output 3	• The content set in "[Pr.93] Optional data monitor: Data type setting 3" is stored at optional data monitor data type setting. • The peak torque ratio is stored when nothing is set.	880+100n	2480+100n
[Md.112]	Optional data monitor output 4	• The content set in "[Pr.94] Optional data monitor: Data type setting 4" is stored at optional data monitor data type setting. • "0" is stored when nothing is set.	881+100n	2481+100n

n: Axis No.-1

POINT

When the communication interrupted by the servo amplifier's power supply OFF or disconnection of communication cable with servo amplifiers during optional data monitor, "0" is stored in [Md.109] to [Md.112].

14.12 Module error collection function

This function collects errors occurred in the Simple Motion module in the PLC CPU.
Those errors are stored in a memory (latch area) of the PLC CPU as module error logs.
The stored error logs are retained even when the PLC CPU is powered off or reset.

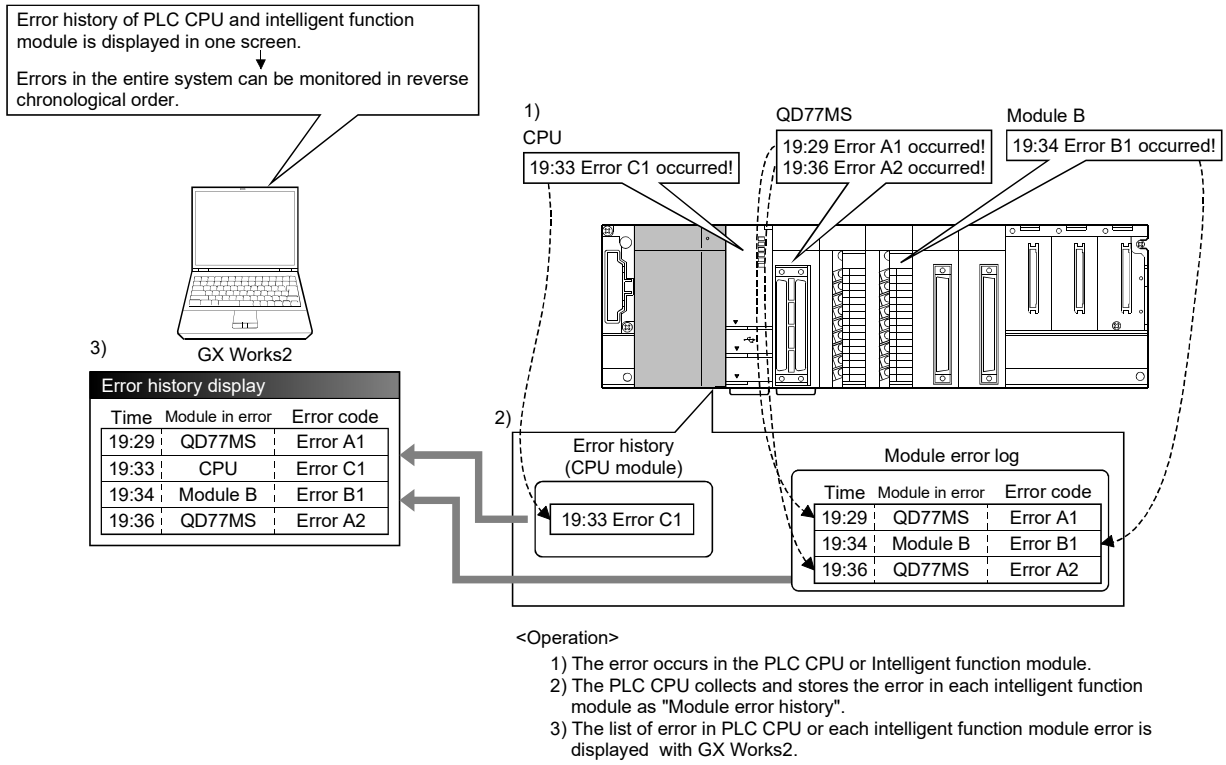

<Operation>

1) The error occurs in the PLC CPU or Intelligent function module.
2) The PLC CPU collects and stores the error in each intelligent function module as "Module error history".
3) The list of error in PLC CPU or each intelligent function module error is displayed with GX Works2.

For details on the module error collection function, refer to Section 16.1 "Checking errors using GX Works2".

14.13 Connect/disconnect function of SSCNET communication

Temporarily connect/disconnect of SSCNET communication is executed during system's power supply ON.
This function is used to exchange the servo amplifiers or SSCNETⅢ cables.

The details shown below explain about the "Connect/disconnect function of SSCNET communication".

[1] Control details
[2] Precautions during control
[3] Buffer memory list
[4] Procedure to connect/disconnect
[5] Program

[1] Control details

Set the connect/disconnect request of SSCNET communication in "[Cd.102] SSCNET control command", and the status for the command accept waiting or execute waiting is stored in "[Md.53] SSCNET control status".
Use this buffer memory to connect the servo amplifiers disconnected by this function.
When the power supply module of head axis of SSCNET system (servo amplifier connected directly to the Simple Motion module) turns OFF/ON, this function is not necessary.

[2] Precautions during control

(1) Confirm the LED display of the servo amplifier for "AA" after completion of SSCNET communication disconnect processing. And then, turn OFF the servo amplifier's power supply.

(2) The "[Md.53] SSCNET control status" only changes into the "-1: Execute waiting" even if the "Axis No.: Disconnect command of SSCNET communication" or "-10: Connect command of SSCNET communication" is set in "[Cd.102] SSCNET control command". The actual processing is not executed. Set "-2: Execute command" in "[Cd.102] SSCNET control command" to execute.

(3) When the "Axis No.: Disconnect command of SSCNET communication" is set to axis not connect or virtual servo amplifier, the status will not change without "[Md.53] SSCNET control status" becoming "-1: Execute waiting".

(4) Operation failure may occur in some axes if the servo amplifier's power supply is turned OFF without using the disconnect function. Be sure to turn OFF the servo amplifier's power supply by the disconnect function.

(5) Execute the connect/disconnect command to the A-axis for multiple-axis servo amplifier.

(6) When using the driver communication function, it can be disconnected by executing the connect/disconnect command, however it cannot be connected again.

(7) The connect/disconnect/execute command cannot be accepted during amplifier-less operation mode. "[Md.53] SSCNET control status" will be "0: Command accept waiting" (The disconnection is released.).
If being switched to the amplifier-less operation mode when "[Md.53] SSCNET control status" is "1: Disconnected axis existing", the disconnected axis is automatically connected when switching to the normal operation mode again.
If being switched to the amplifier-less operation mode when "[Md.53] SSCNET control status" is "-1: Execute waiting", the connect/disconnect command becomes invalid.

[3] Buffer memory list

The buffer memory for the connect/disconnect function of SSCNET communication is shown below.

(1) System control data

Setting item		Setting value	Setting details	Buffer memory address	
				QD77MS2 QD77MS4	QD77MS16
[Cd.102]	SSCNET control command	→	The connect/disconnect command of SSCNET communication is executed. 0 : No command Axis No. (Note-1) : Disconnect command of SSCNET communication (Axis No. to be disconnected) -2 : Execute command -10 : Connect command of SSCNET communication Except above setting: Invalid (Note-1): QD77MS2 : 1 to 2, QD77MS4 : 1 to 4, QD77MS16: 1 to 16	1932	5932

(2) System monitor data

Monitor item		Monitor value	Storage details	Buffer memory address	
				QD77MS2 QD77MS4	QD77MS16
[Md.53]	SSCNET control status	→	The connect/disconnect status of SSCNET communication is stored. 1: Disconnected axis existing 0: Command accept waiting -1: Execute waiting -2: Executing	1433	4233

[4] Procedure to connect/disconnect

Procedure to connect/disconnect at the exchange of servo amplifiers or SSCNETⅢ cables is shown below.

(1) Procedure to disconnect

1) Set the axis No. to disconnect in "[Cd.102] SSCNET control command". (Setting value: 1 to 16)

2) Check that "-1: Execute waiting" is stored in "[Md.53] SSCNET control status". (Disconnect execute waiting)

3) Set "-2: Execute command" in "[Cd.102] SSCNET control command".

4) Check that "1: Disconnected axis existing" is stored in "[Md.53] SSCNET control status". (Completion of disconnection. "20: Servo amplifier has not been connected" is stored in "[Md.26] Axis operation status".)

5) Turn OFF the servo amplifier's power supply after checking the LED display "AA" of servo amplifier to be disconnected.

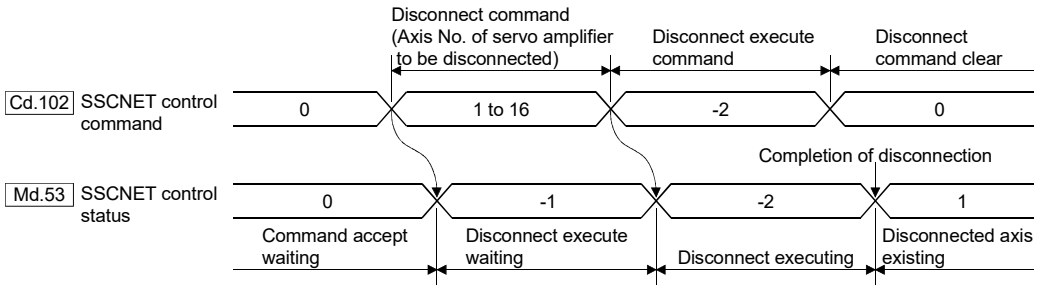

(2) Procedure to connect

1) Turn ON the servo amplifier's power supply.

2) Set "-10: Connect command of SSCNET communication" in "[Cd.102] SSCNET control command".

3) Check that "-1: Execute waiting" is set in "[Md.53] SSCNET control status".
(Connect execute waiting)

4) Set "-2: Execute command" in "[Cd.102] SSCNET control command".

5) Check that "0: Command accept waiting" is set in "[Md.53] SSCNET control status". (Completion of connection)

6) Resume operation of servo amplifier after checking "0: Standby" in "[Md.26] Axis operation status" of the connected axis.

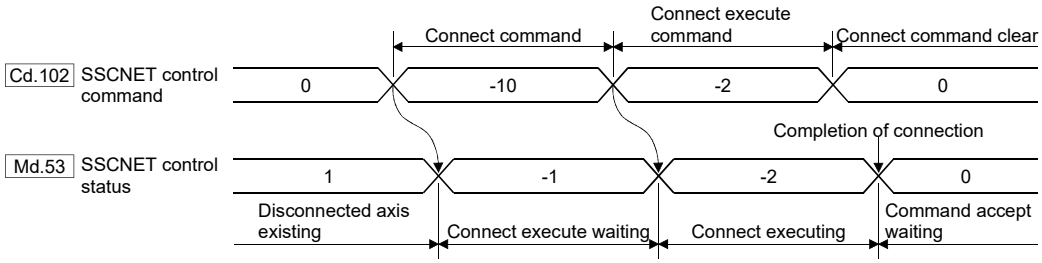

POINT
When "-1: Execute waiting" is set in "[Md.53] SSCNET control status", the command of execute waiting can be canceled if "0: No command" is set in "[Cd.102] SSCNET control command".

[5] Program

The sequence program example to connect/disconnect the servo amplifiers after Axis 5 connected to the QD77MS16 is shown next page.

Disconnect procedure : Turn OFF the servo amplifier's power supply after checking the LED display "AA" of servo amplifier by turning X50 from OFF to ON.

Connect procedure : Resume operation of servo amplifier after checking the "[Md.26] Axis operation status" of the connected servo amplifier by turning X51 from OFF to ON.

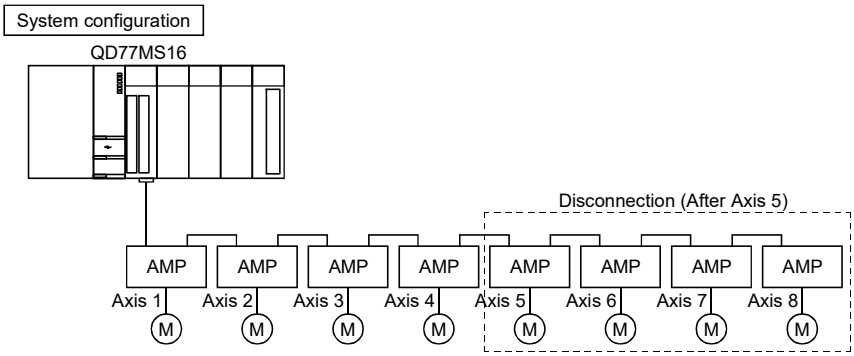

(1) Disconnect operation

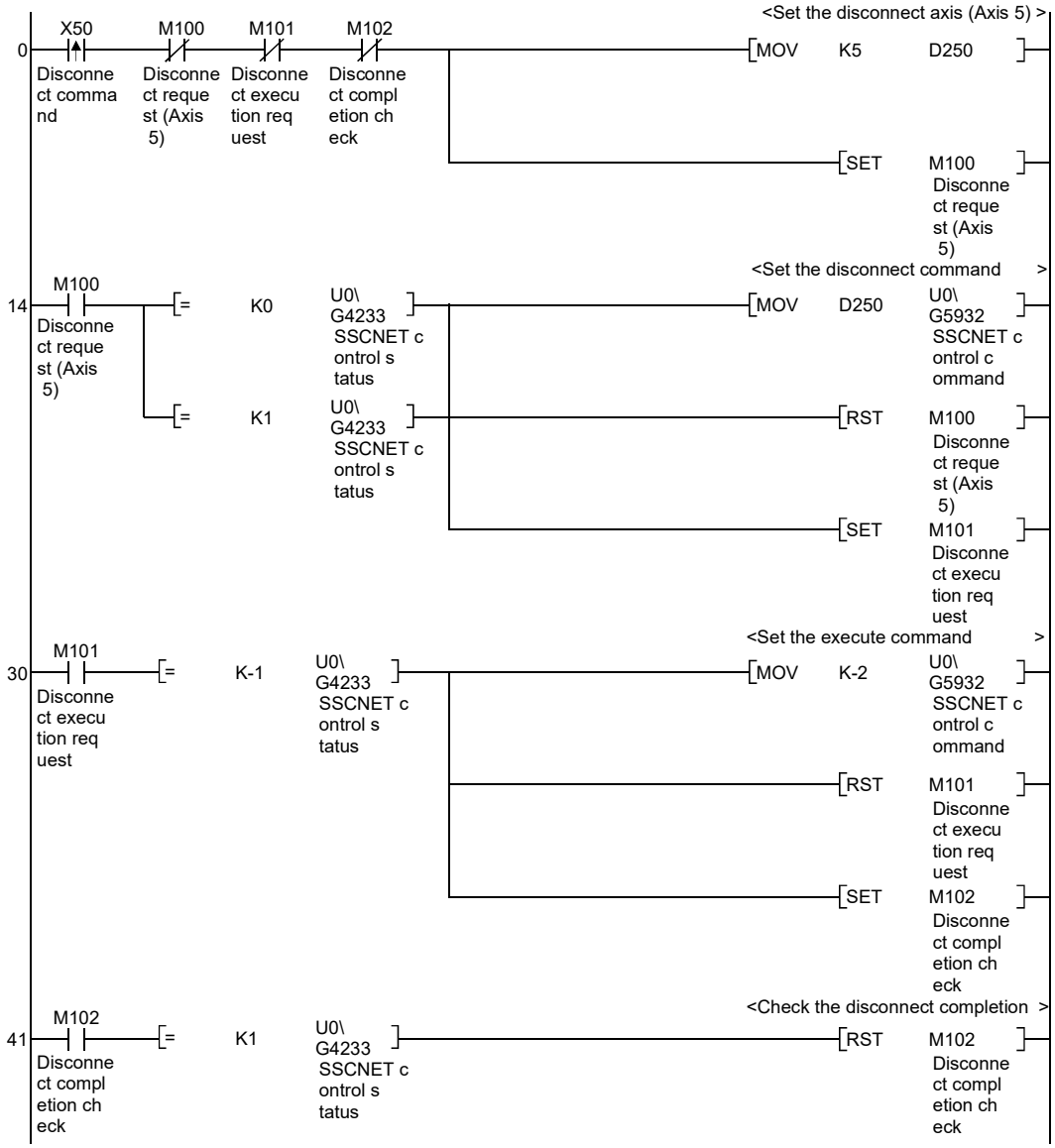

(2) Connect operation

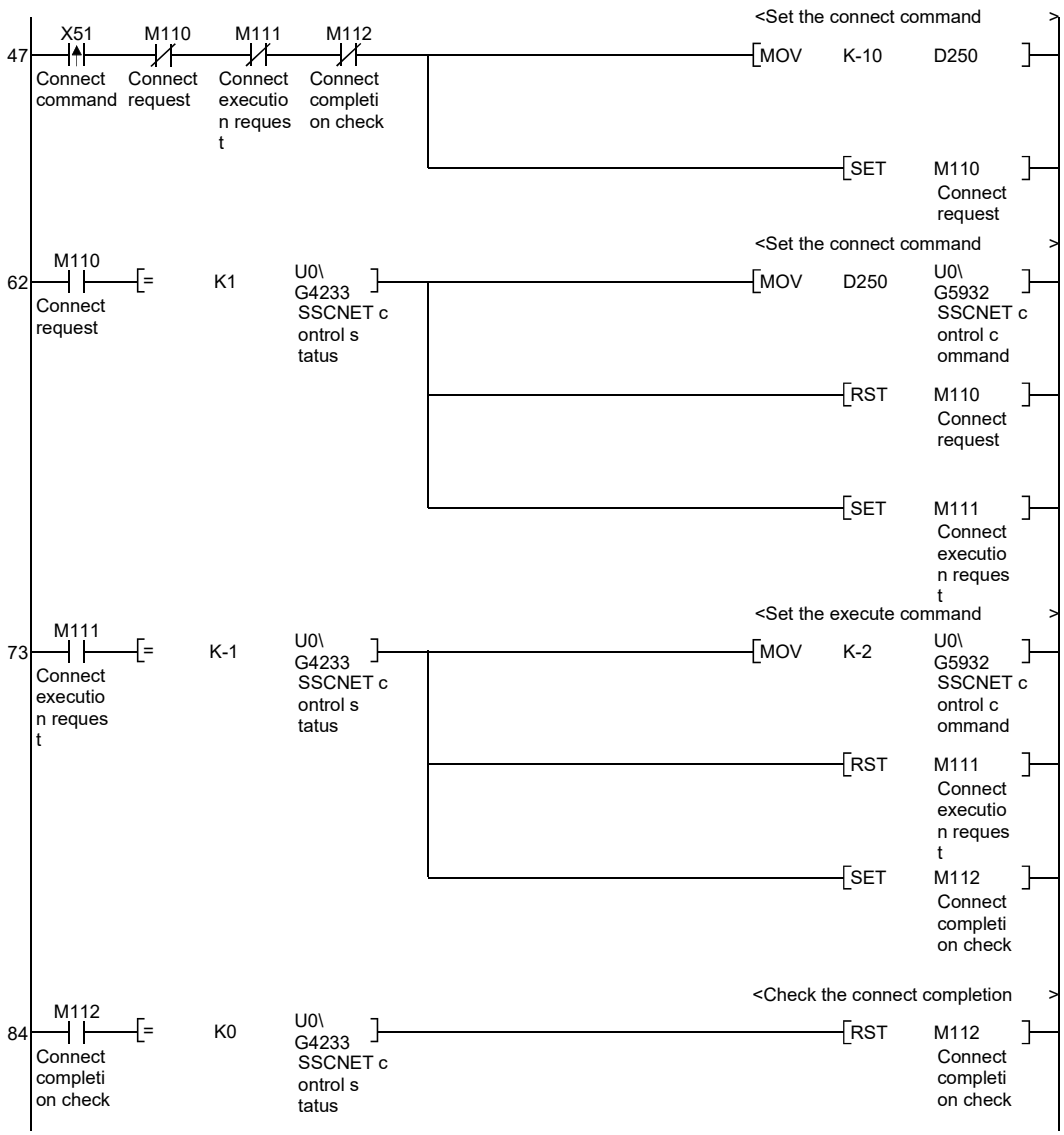

14.14 QD75MH initial value setting function

The "QD75MH initial value setting function" is used to set the factory-set initial value of QD75MH in the setting data set in the QD77MS buffer memory/internal memory and flash ROM/internal memory (nonvolatile).
Because some initial values of parameter between QD77MS and QD75MH are different, when switching to QD77MS from QD75MH without using Simple Motion Module Setting Tool of GX Works2, set the parameter value to factory-set initial value of QD75MH by this function before using. (This function does not need to be executed in case the parameter setting of QD77MS is executed using the Simple Motion Module Setting Tool of GX Works2.)

The details shown below explain about the "QD75MH initial value setting function".
[1] QD75MH initial value setting means
[2] Control details
[3] Precautions during control
[4] QD75MH initial value setting method

[1] QD75MH initial value setting means

• Initialization is executed with a sequence program.

[2] Control details

The following table shows the data that the initial value is set by the "QD75MH initial value setting function".
(The data set are "buffer memory/internal memory" and "flash ROM/internal memory (nonvolatile)" setting data.)

Setting data
Basic parameters ([Pr.1] to [Pr.10])
Detailed parameters ([Pr.11] to [Pr.42], [Pr.80] to [Pr.90], [Pr.95])
HPR basic parameters ([Pr.43] to [Pr.48])
HPR detailed parameters ([Pr.50] to [Pr.57])
Expansion parameters ([Pr.91] to [Pr.94], [Pr.96], [Pr.97], [Pr.114])
Servo parameters ([Pr.100], PA, PB, PC, PD, PE, PS, PF, Po, PL)
Positioning data (No.1 to 600)
Block start data (No.7000 to 7004)

Refer to the "Type QD75MH Positioning Module Use's Manual (Details)" for set initial value. However, the "initial value of QD77MS" is set in the data of QD77MS only.

[3] Precautions during control

(1) Parameter initialization is only executed when the positioning control is not carried out (when the PLC READY signal [Y0] is OFF).
The warning "In PLC READY" (warning code: 111) will occur if executed when the PLC READY signal [Y0] is ON.

(2) Writing to the flash ROM is up to 100,000 times. If writing to the flash ROM exceeds 100,000 times, the writing may become impossible, and the error "Flash ROM write error" (error code: 801) will occur.

(3) A "PLC CPU reset" or "PLC CPU power restart" must be carried out after the parameters are initialized.

(4) When using the QD77MS16, the setting value is set to "1" even though the initial value setting is executed by this function because the initial value of QD75MH "0" is out of the setting range in "[Pr.80] External input signal selection".

Important

Parameter initialization takes about 10 seconds. (Up to 30 seconds are sometimes required.)
Do not turn the power ON/OFF or reset the PLC CPU during parameter initialization. If the power is turned OFF or the PLC CPU module is reset to forcibly end the process, the data backed up in the flash ROM/internal memory (nonvolatile) will be lost.

[4] QD75MH initial value setting method

(1) QD75MH initial value setting is carried out by the writing of the data shown in the table below to the buffer memory using the TO command/intelligent function device.
The initialization of the parameter is executed at the time point the data is written to the buffer memory.

Setting item		Setting value	Setting details	Buffer memory address	
				QD77MS2 QD77MS4	QD77MS16
[Cd.47]	QD75MH initial value setting request	1	Set "1" (Requests QD75MH initial value setting).	1909	5909

*: Refer to Section 5.7.1 "System control data" for details on the setting details.

When the initialization is complete, "0" will be set in "[Cd.47] QD75MH initial value setting request" automatically.

14.15 Servo amplifier command value error check function

This function is used to check the position command value to be sent to the servo amplifier and the deviation counter value to be received from the servo amplifier, and check that there is no error in the operation of the Simple Motion module and servo amplifier.

The details shown below explain about the "Servo amplifier command value error check function".

[1] Control details

[2] Setting method of "Servo amplifier command value error check function"

[1] Control details

The servo amplifier command value error check function carries out the following checks.

(1) Position command monitoring*1

If the absolute value of difference between the previous and current values of the position commands to be sent to the servo amplifier is equal to or larger than "[Pr.135] Position command error check threshold" when the servo is off, it is judged as an error. Axes with established connection*2 and in which any servo alarm or warning is not occurring are targeted for monitoring.

This monitoring function can be disabled.

(2) Consistency monitoring

This function monitors the consistency between the position commands to be sent to the servo amplifier and the position commands stored in the internal memory, and judges as an error if there is a mismatch. Axes with established connection*2 are targeted for monitoring.

This monitoring function cannot be disabled.

(3) Deviation counter monitoring*1

If an absolute value of a deviation counter received from the servo amplifier during servo OFF is larger than "[Pr.136] Deviation counter error check threshold", it is judged as an error. Axes with established connection*2 and in which any servo alarm or warning is not occurring are targeted for monitoring.

This monitoring function can be disabled.

*1: (1) and (3) are for Mitsubishi servo amplifiers only. They are not monitored in Mitsubishi inverters and drivers from partner manufacturers.

*2: Established connection means that the servo amplifier LED is indicating "b_" or later.

The following table lists the error codes for each error detection.
An error is output to axes judged as an error. In addition, a servo warning "Controller forced stop warning" (warning No.: E7) occurs in all the connected servo amplifiers, and the erroneous axes are stopped with dynamic brake after forced stop deceleration. When an error occurs, it cannot be reset with "[Cd.5] Axis error reset". To recover from an error, power off and on the Simple Motion module.

No.	Error No.	Error name	Remedy
(1)	120	Position command error	• Check if the setting value of "[Pr.135] Position command error check threshold" is appropriate based on "[Md.103] Motor rotation speed". • Check the SSCNETⅢ cable for any abnormality. • Take measures against noise. • Replace the module.
(2)	122	Servo amplifier send data error	Depending on the version, the remedy to be taken differs. [If the first five digits of the serial number are before 20112] • Check "[Md.133] Operation cycle over flag", and if the operation cycle over is occurring, correct the positioning or change the setting of "[Pr.96] Operation cycle setting" to a longer value. • Replace the module. [If the first five digits of the serial number are 20112 or later] • Replace the module.
(3)	121	Deviation counter error	• Check if the setting value of "[Pr.136] Deviation counter error check threshold" is appropriate based on "[Md.102] Deviation counter value". • Check the SSCNETⅢ cable for any abnormality. • Take measures against noise. • Replace the module.

[2] Setting method of "Servo amplifier command value error check function"

To use the "servo amplifier command value error check function", set the required values to the following parameters, and write them to the Simple Motion module. Refer to Section 5.2.7 "Expansion parameters" for details of the setting values.

Setting item		Setting details	Buffer memory address	
			QD77MS2 QD77MS4	QD77MS16
[Pr.135]	Position command error check threshold	Set the threshold to check the position command for errors with the servo amplifier command value error check function.	136+150n 137+150n	
[Pr.136]	Deviation counter error check threshold	Set the threshold to check the deviation counter for errors with the servo amplifier command value error check function.	138+150n 139+150n	

n: Axis No. - 1

14.16 Hot line forced stop function

This function is used to execute deceleration stop safety for other axes when the servo alarm occurs in the servo amplifier MR-JE-B.

The details shown below explain about the "Hot line forced stop function".
[1] Control details
[2] Precautions during control

[1] Control details

The hot line forced stop function is set in the servo parameter. This function can execute deceleration stop for other axes without via Simple Motion module by notifying the servo alarm occurrence.
For details, refer to "MR-JE-_B Servo Amplifier Instruction Manual".

This function is enabled at the MR-JE-B factory-set.
To disable this function, set "1: Disabled" in the servo parameter "Hot line forced stop function Hot line forced stop function selection (PA27)".
Also, when the system is configured with MR-JE-B and MR-J4-B/MR-JE-BF, this function can execute deceleration stop for MR-J4-B/MR-JE-BF at the servo alarm occurrence in MR-JE-B. To execute deceleration stop for MR- J4-B/ MR-JE-BF, set "2: Enabled" in the servo parameter of MR-J4-B/MR-JE-BF "Hot line forced stop function Deceleration to stop selection (PA27)". ("0: Disabled" is set at factory-set.)

The following shows the setting value of the servo parameter (PA27) and the operation of servo amplifier.

[MR-JE-B]

Setting value of " Hot line forced stop function Hot line forced stop function selection (PA27)"	Output hot line	Deceleration stop when receiving the hot line signal
0: Enabled (Initial value)	Enabled	Enabled
1: Disabled	Disabled	Disabled

[MR-J4-B/MR-JE-BF]

Setting value of "Hot line forced stop function Deceleration to stop selection (PA27)"	Output hot line	Deceleration stop when receiving the hot line signal
0: Disabled (Initial value)	Disabled	Disabled
2: Enabled	Disabled	Enabled

Use the software version that supports the hot line forced stop function for the servo amplifier to use the hot line forced stop function.
The following table shows the software version of servo amplifier that supports the hot line forced stop function.

Servo amplifier type	Software version
MR-J4(W)-B	B7 or later
MR-JE-B	B6 or later

Note): The servo amplifier except above does not support the hot line forced stop function. Therefore, it does not output the hot line or execute deceleration stop by receiving the hot line signal.

[2] Precautions during control

(1) The servo warning "Controller forced stop warning" (warning No.: E7) occurs in the axis where the hot line forced stop function executes deceleration stop.

(2) To clear the servo warning "Controller forced stop warning" (warning No.: E7) occurred by the hot line forced stop function, set "1" in "[Cd.5] Axis error reset" for each axis after the factor is removed in the axis where the servo alarm occurred. Even if "1" is set in "[Cd.5] Axis error reset" before the factor is not removed, the servo warning "Controller forced stop warning" (warning No.: E7) is not cleared.

[3] Operation chart

The following shows the timing at the servo alarm occurrence.

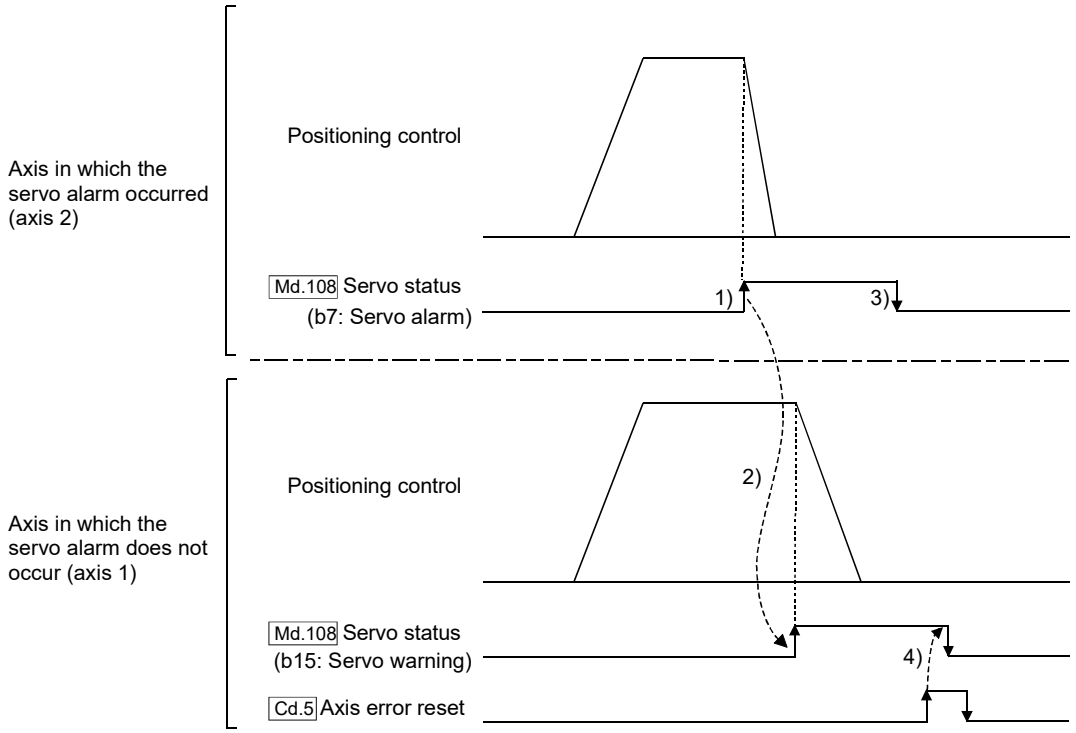

1) The servo alarm occurs in axis 2 and the servomotor stops with dynamic brake.
2) The notification from the alarm occurrence axis is received in axis 1. The servo warning ("[Md.108] Servo status": b15) is turned ON and the deceleration stop is executed.
3) The servo alarm ("[Md.108] Servo status": b7) is turned OFF by removing the servo alarm factor of axis 2.
4) The warning ("[Md.108] Servo status": b15) is turned OFF by "[Cd.5] Axis error reset" of axis 1.

Chapter 15 Dedicated Instructions

The dedicated instructions of Simple Motion module are explained in this chapter.

These instructions are used to facilitate the programming for the use of the functions of the intelligent function module.
Using the dedicated instructions, the programming can be carried out without being aware of the buffer memory address of Simple Motion module and interlock signal.

15.1 List of dedicated instructions 15- 2
15.2 Interlock during dedicated instruction is executed 15- 2
15.3 ZP.PSTRT1, ZP.PSTRT2, ZP.PSTRT3, ZP.PSTRT4 ..... 15- 3
15.4 ZP.TEACH1, ZP.TEACH2, ZP.TEACH3, ZP.TEACH4 ..... 15- 7
15.5 ZP.PFWRT 15- 11
15.6 ZP.PINIT 15- 15

15.1 List of dedicated instructions

The dedicated instructions explained in this Chapter are listed in Table 15.1.

Table 15.1 List of dedicated instructions

Application	Dedicated instruction	Outline of functions	Reference
Positioning start	ZP.PSTRT1	This function starts the positioning control of the designated axis of the Simple Motion module.	Section 15.3
	ZP.PSTRT2		
	ZP.PSTRT3		
	ZP.PSTRT4		
Teaching	ZP.TEACH1	This function carries out teaching the designated axis of the Simple Motion module.	Section 15.4
	ZP.TEACH2		
	ZP.TEACH3		
	ZP.TEACH4		
Writing to flash ROM	ZP.PFWRT	This function writes the buffer memory parameters, positioning data and block start data to the flash ROM.	Section 15.5
Parameter initialization	ZP.PINIT	This function initializes the buffer memory and flash ROM setting data to the factory-set data (initial values of the Simple Motion module).	Section 15.6

POINT

The dedicated instructions of QD77MS16 can be used for only axis 1 to 4. They cannot be used for axis 5 to 16. If the ZP.PSTRT5 to ZP.PSTRT16 or ZP.TEACH5 to ZP.TEACH16 is executed, the error "Program code error" (error code: 4002) for PLC CPU and the error "PLC CPU error" (error code: 803) for QD77MS16 will occur and positioning cannot be started.
Refer to "QCPU User's Manual (Hardware Design, Maintenance and Inspection) for error of PLC CPU".

15.2 Interlock during dedicated instruction is executed

The positioning start instruction (ZP.PSTRT_) and teaching instruction (ZP.TEACH_) cannot be executed simultaneously in each axis. If they are executed at the same time, the second and later instructions are ignored by an internal interlock (no error will occur).
The timing of the positioning start instruction (ZP.PSTRT_) is as shown below.

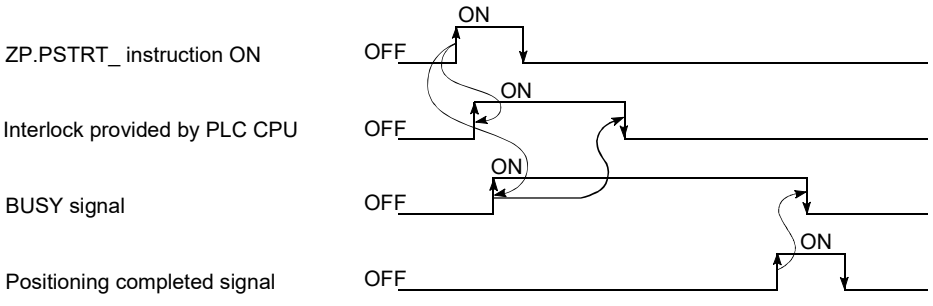

15.3 ZP.PSTRT1, ZP.PSTRT2, ZP.PSTRT3, ZP.PSTRT4

These dedicated instructions are used to start the positioning of the designated axis.

Setting data	Usable device								
	Internal device		File register	Link direct device J__		Intelligent function module U_\G_	Index register Zn	Constant	Others
	Bit	Word		Bit	Word			K, H	
(S)	–	○		–				–	–
(D)	○	○	–	–				–	–

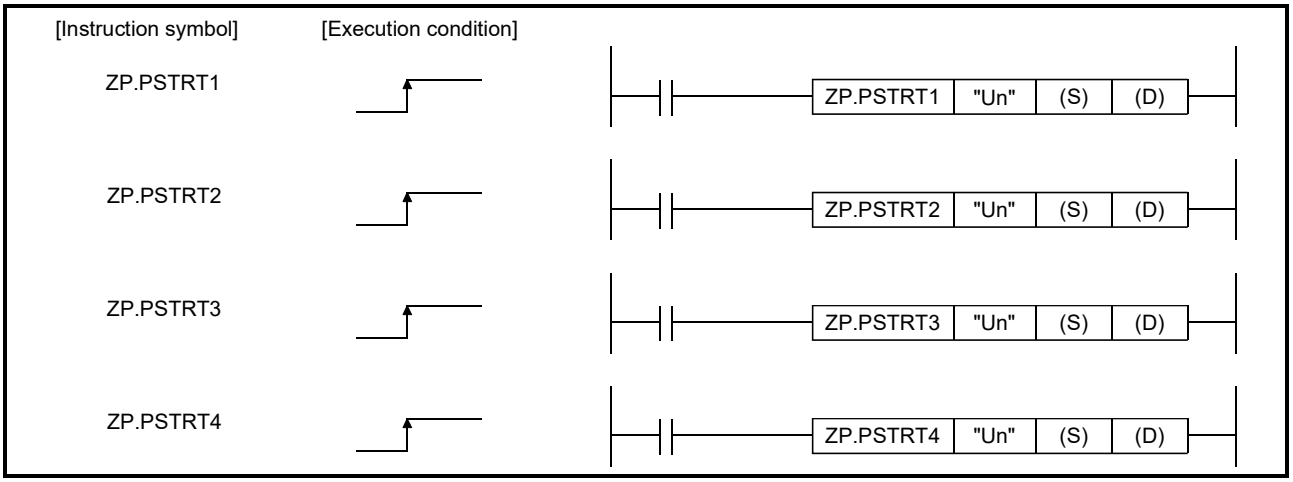

Note) When ZP.PSTRT1, ZP.PSTRT2, ZP.PSTRT3, and ZP.PSTRT4 are common to each other, they are designated as "ZP.PSTRT_".

[Setting data]

Setting data	Setting details	Setting side (Note-1)	Data type
"Un"	Head I/O number of Simple Motion module (00 to FE: High-order two digits of I/O number expressed in three digits)	User	BIN 16 bits
(S)	Head number of a device in which control data is stored	–	Device name
(D)	Head number of a bit device which turns ON the operation by one scan at the time of completion of the instruction. If the instruction is completed abnormally, ((D) + 1) will also be turned ON.	System	Bit

Note) The file register of each of the local device and the program cannot be used as a device for setting data.

(Note-1): The data on the setting side is as follows.

- User : Data before the execution of dedicated instructions is stored by user.
- System: Data after the execution of dedicated instruction is stored by PLC CPU.

[Control data]

Device	Item	Setting data	Setting range	Setting side (Note-1)
(S)+0	System area	–	–	–
(S)+1	Complete status	The state at the time of completion is stored. • 0 : Normal completion • Other than 0: Abnormal completion (error code) (Note-2)	–	System
(S)+2	Start No.	The following data Nos. to be started by the ZP.PSTRT_ instruction are designated. • Positioning data No. : 1 to 600 • Block start : 7000 to 7004 • Machine HPR : 9001 • Fast HPR : 9002 • Current value changing : 9003 • Multiple axes simultaneous start : 9004	1 to 600 7000 to 7004 9001 to 9004	User

(Note-1): The data on the setting side is as follows.
- User : Data before the execution of dedicated instructions is stored by user.
- System: Data after the execution of dedicated instruction is stored by PLC CPU.

(Note-2): Refer to Section 16.4 for error codes at abnormal completion.

[Functions]

(1) The positioning start of the axes to be processed (See below) is carried out.
- ZP.PSTRT1: Axis 1
- ZP.PSTRT2: Axis 2
- ZP.PSTRT3: Axis 3
- ZP.PSTRT4: Axis 4

(2) The block start, HPR start, current value changing, and multiple axes simultaneous start can be carried out by the setting of "start number" 7000 to 7004/9001 to 9004 in ((S)+2).

(3) The ZP.PSTRT_ instruction completion can be confirmed using the complete devices ((D)+0) and ((D)+1).

(a) Complete device ((D)+0)
This device is turned ON by the END processing of the scan for which ZP.PSTRT_ instruction is completed, and turned OFF by the next END processing.

(b) Complete state display device ((D)+1)
This device is turned ON and OFF according to the state in which ZP.PSTRT_ instruction is completed.
- When completed normally :Kept unchanged at OFF.
- When completed abnormally: This device is turned ON by the END processing of the scan for which ZP.PSTRT_ instruction is completed, and turned OFF by the next END processing. (Same ON/OFF operation as the complete device.)

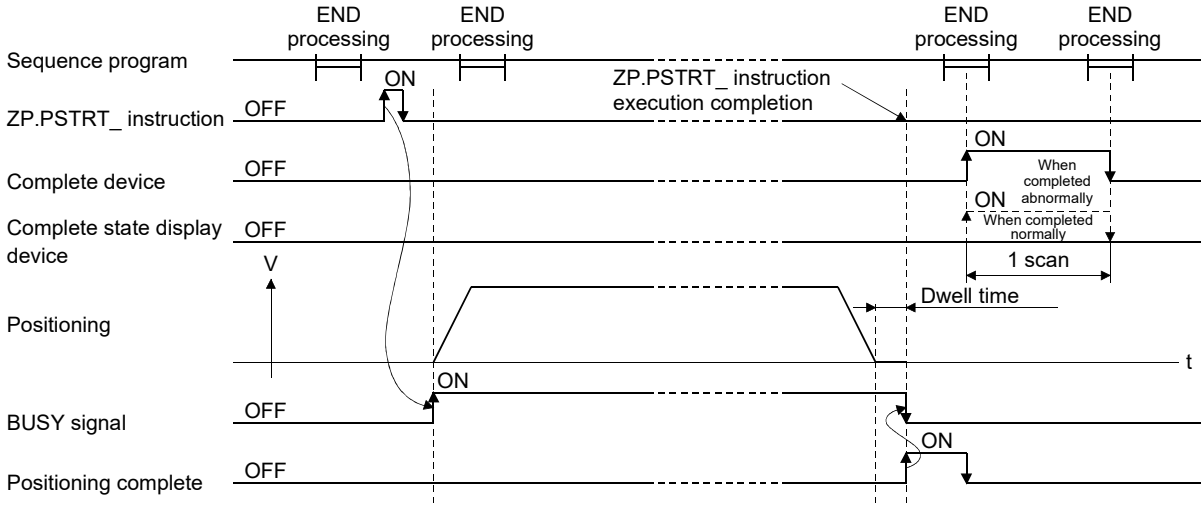

[Errors]

(1) When a ZP.PSTRT_ instruction is completed abnormally, the error complete signal ((D)+1) is turned ON, and the error code is stored in the complete status ((S)+1).
Check and take a measure against the error referring to Section 16.4 "List of errors".

[Precautions]

(1) If the positioning is started by the ZP.PSTRT_ instruction, the start complete signals turn ON. However, since the ON time is short, the ON status may not to be detected in the program.
Confirm the operation during the positioning control using the ZP.PSTRT_ start instruction and BUSY signals.

(2) If the stop instruction is input before completion of the positioning which has been started by the ZP.PSTRT_ instruction, the completion device (D) turns the 1-scan ON to complete execution of the ZP.PSTRT_ instruction.

(3) The following dedicated instructions cannot be executed simultaneously for the same axis.
(The instructions can be executed simultaneously for different axes.)
• Positioning start instructions (ZP.PSTRT1 to ZP.PSTRT4)
• Teaching instructions (ZP.TEACH1 to ZP.TEACH4)

(4) The ZP.PSTRT_ instruction can only be executed when the READY signal [X0] is turned ON.
Even if the ZP.PSTRT_ instruction execution request is given when the READY signal [X0] is turned OFF, the ZP.PSTRT_ instruction will not be executed. (Not processed.)
Before executing the ZP.PSTRT_ instruction, turn ON the PLC READY signal [Y0], and turn ON the READY signal [X0].

(5) If the ZP.PSTRT_ instruction is executed in the following cases, an error "Dedicated instruction error" (error code: 804) will occur and positioning cannot be started.
- Any value other than 1 to 600, 7000 to 7004, and 9001 to 9004 is set to "Starting number" (device: (S)+2) of the control data.

(6) When the multiple axes simultaneous start is executed by ZP.PSTRT_ instruction, the completion device (D) will turn ON when the positioning of the axes executed by ZP.PSTRT_ instructions (when the instructions is ZP.PSTRT1, the axis will be 1.) is completed.

(7) When "[Cd.3] Positioning start No." is changed from ZP.PSTRT_ instruction is executed until the positioning start is completed, the changed positioning is started. When starting the positioning using ZP.PSTRT_ instruction, do not change "[Cd.3] Positioning start No." until the start complete signal is turned ON.

[Program examples]

- The following program executes the positioning start of positioning data No. 1 when X100 turns ON in QD77MS4.
  Use D30 to D32 as the control data devices of positioning data No. 1, and M32 and M33 as the completion devices.

(1) Positioning start program

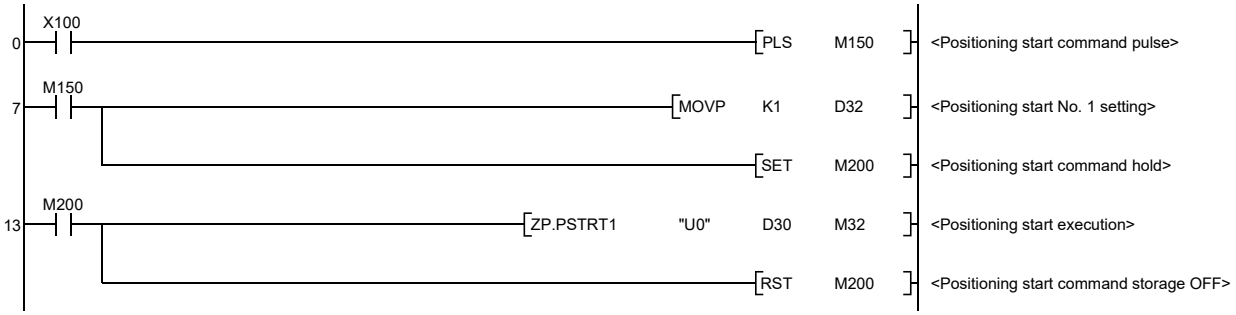

(2) Positioning start program (when dedicated instruction is not used)

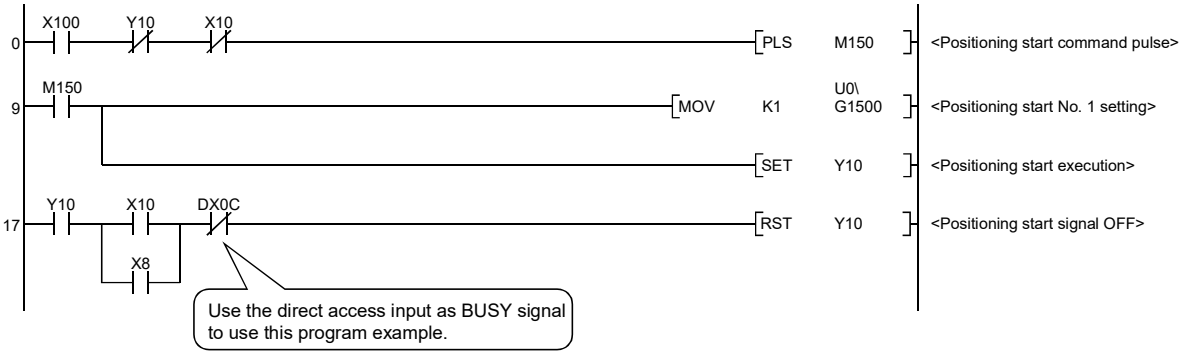

15.4 ZP.TEACH1, ZP.TEACH2, ZP.TEACH3, ZP.TEACH4

These dedicated instructions are used to teach the designated axis.

Setting data	Usable device								
	Internal device		File register	Link direct device J__		Intelligent function module U_\G_	Index register Zn	Constant	Others
	Bit	Word		Bit	Word			K, H	
(S)	–	○		–				–	–
(D)	○	○	–	–				–	–

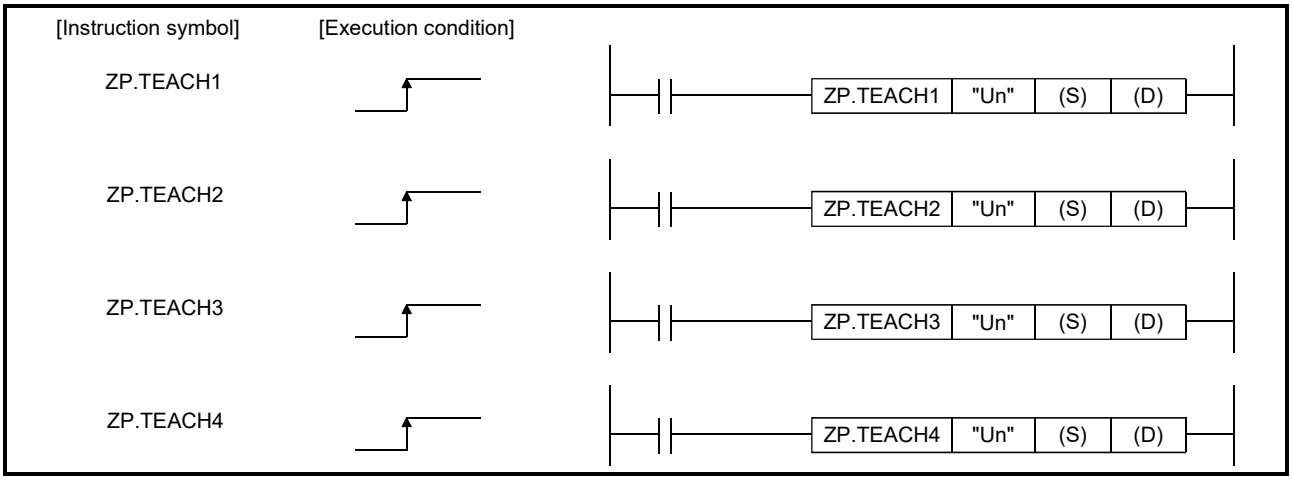

Note) When ZP.TEACH1, ZP.TEACH2, ZP.TEACH3, and ZP.TEACH4 are common to each other, they are designated as "ZP.TEACH_".

[Setting data]

Setting data	Setting details	Setting side (Note-1)	Data type
"Un"	Head I/O number of Simple Motion module (00 to FE: High-order two digits of I/O number expressed in three digits)	User	BIN 16 bits
(S)	Head number of a device in which control data is stored	–	Device name
(D)	Head number of a bit device which turns ON the operation by one scan at the time of completion of the instruction. If the instruction is completed abnormally, ((D) + 1) will also be turned ON.	System	Bit

Note) The file register of each of the local device and the program cannot be used as a device for setting data.

(Note-1): The data on the setting side is as follows.

- User : Data before the execution of dedicated instructions is stored by user.
- System: Data after the execution of dedicated instruction is stored by PLC CPU.

[Control data]

Device	Item	Setting data	Setting range	Setting side (Note-1)
(S)+0	System area	–	–	–
(S)+1	Complete status	The state at the time of completion is stored. 0 : Normal completion Other than 0 : Abnormal completion (error code) (Note-2)	–	System
(S)+2	Teaching data selection	The address (positioning address/arc address) to which the command position value is written is set. 0: Command position value is written to positioning address. 1: Command position value is written to arc address.	0, 1	User
(S)+3	Positioning data No.	The positioning data No. for which teaching is carried out is set.	1 to 600	User

(Note-1): The data on the setting side is as follows.
- User : Data before the execution of dedicated instructions is stored by user.
- System: Data after the execution of dedicated instruction is stored by PLC CPU.

(Note-2): Refer to Section 16.4 for error codes at abnormal completion.

[Functions]

(1) The "command position value" of the axes to be set (See below) is set in the positioning address or arc address.
The positioning data other than the positioning addresses and arc addresses are set by GX Works2 or using a sequence program.
- ZP.TEACH1: Axis 1
- ZP.TEACH2: Axis 2
- ZP.TEACH3: Axis 3
- ZP.TEACH4: Axis 4

(2) Teaching can be carried out for the positioning data No. 1 to 600.

(3) The movement of the machine to the address (position) set in the positioning address/arc address of the positioning data is carried out by the JOG operation, inching operation, or manual pulse generator operation.

(4) The ZP.TEACH_ instruction completion can be confirmed using the complete devices ((D)+0) and ((D)+1).

(a) Complete device ((D)+0)
This device is turned ON by the END processing of the scan for which ZP.TEACH_ instruction is completed, and turned OFF by the next END processing.

(b) Complete state display device ((D)+1)
This device is turned ON and OFF according to the state in which ZP.TEACH_ instruction is completed.
- When completed normally :Kept unchanged at OFF.
- When completed abnormally: This device is turned ON by the END processing of the scan for which ZP.TEACH_ instruction is completed, and turned OFF by the next END processing. (Same ON/OFF operation as the complete device.)

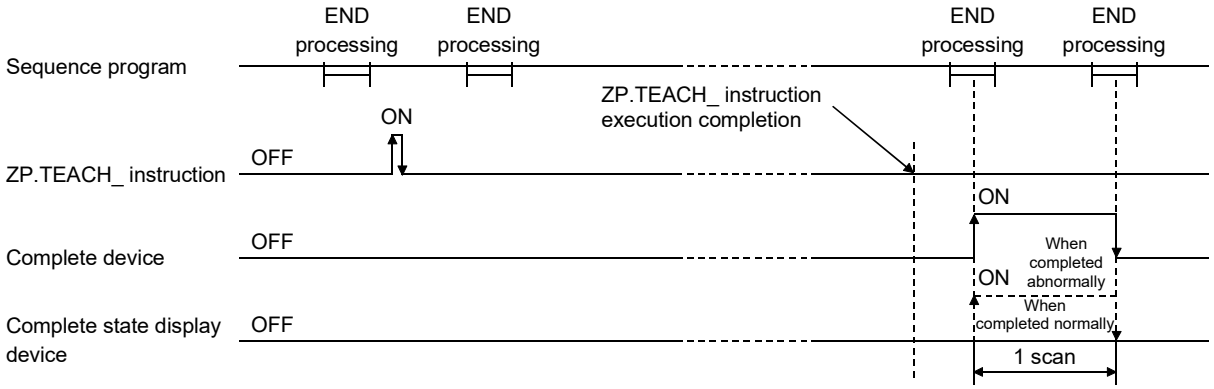

[Errors]

(1) When a ZP.TEACH_ instruction is completed abnormally, the error complete signal ((D)+1) is turned ON, and the error code is stored in the complete status (S)+1.
Check and take a measure against the error referring to Section 16.4 "List of errors".

[Precautions]

(1) The following dedicated instructions cannot be executed simultaneously for the same axis.
(The instructions can be executed simultaneously for different axes.)
- Positioning start instructions (ZP.PSTRT1 to ZP.PSTRT4)
- Teaching instructions (ZP.TEACH1 to ZP.TEACH4)

(2) The ZP.TEACH_ instruction can only be executed when the BUSY signal is turned OFF.
When the BUSY signal is turned ON, the ZP.TEACH_ instruction will not be executed. (Not processed.)
Before executing the ZP.TEACH_ instruction, make sure that the BUSY signal for the axis to be processed is turned OFF.

(3) If the ZP.TEACH_ instruction is executed in any of the following cases, an error "Dedicated instruction error" (error code: 804) will occur and teaching cannot be performed.
- Any value other than 0 and 1 is set to "Teaching selection" (device: (S)+2) of the control data.
- Any value other than 1 to 600 is set to "Positioning No." (device: (S)+3) of the control data.

[Program example]

Program to execute the teaching of the positioning data No. 3 of the axis 1 when X39 is turned ON in QD77MS4.

(1) Teaching program

Positioned manually to target position.

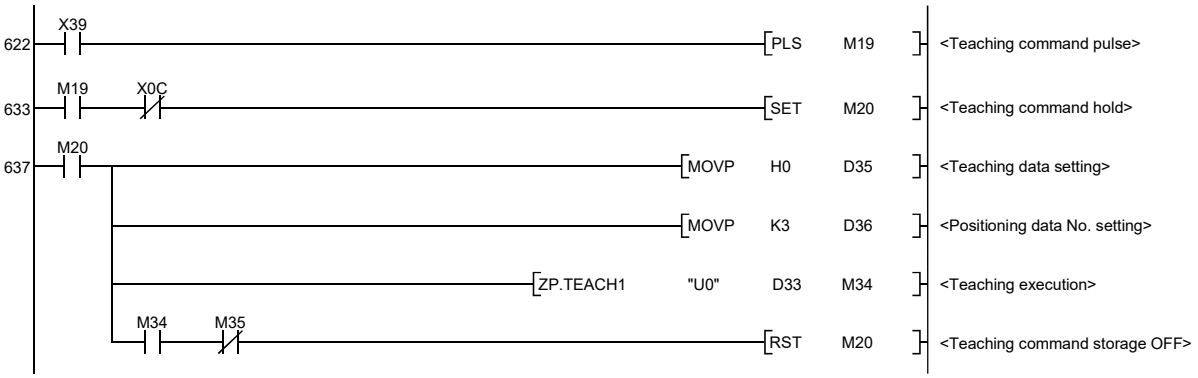

(2) Teaching program (when dedicated instruction is not used)

Positioned manually to target position.

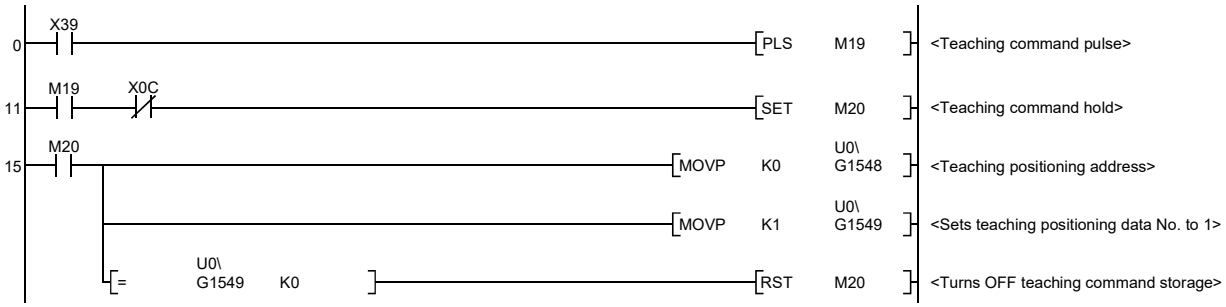

15.5 ZP.PFWRT

These dedicated instructions are used to write the parameters, positioning data, and block start data of Simple Motion module to the flash ROM.

Setting data	Usable device								
	Internal device		File register	Link direct device J__		Intelligent function module U_\G_	Index register Zn	Constant	Others
	Bit	Word		Bit	Word			K, H	
(S)	–	○		–				–	–
(D)	○	○	–	–				–	–

[Instruction symbol] [Execution condition]

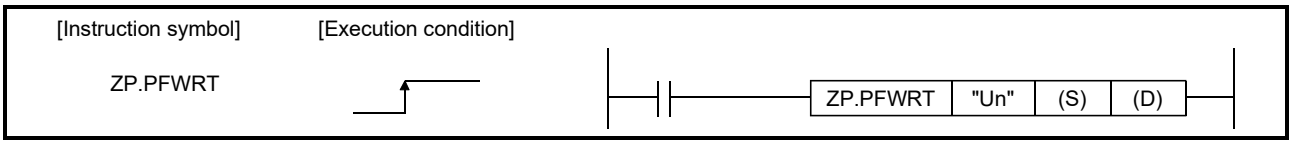

[Setting data]

Setting data	Setting details	Setting side (Note-1)	Data type
"Un"	Head I/O number of Simple Motion module (00 to FE: High-order two digits of I/O number expressed in three digits)	User	BIN 16 bits
(S)	Head number of a device in which control data is stored	–	Device name
(D)	Head number of a bit device which turns ON the operation by one scan at the time of completion of the instruction. If the instruction is completed abnormally, ((D) + 1) will also be turned ON.	System	Bit

Note) The file register of each of the local device and the program cannot be used as a device for setting data.

(Note-1): The data on the setting side is as follows.

- User : Data before the execution of dedicated instructions is stored by user.
- System: Data after the execution of dedicated instruction is stored by PLC CPU.

[Control data]

Device	Item	Setting data	Setting Range	Setting side (Note-1)
(S)+0	System area	–	–	–
(S)+1	Complete status	The state at the time of completion is stored. 0 : Normal completion Other than 0 : Abnormal completion (error code) (Note-2)	–	System

(Note-1): The data on the setting side is as follows.

- User : Data before the execution of dedicated instructions is stored by user.
- System: Data after the execution of dedicated instruction is stored by PLC CPU.

(Note-2): Refer to Section 16.4 for error codes at abnormal completion.

[Functions]

(1) The ZP.PFWRT instruction completion can be confirmed using the complete devices ((D)+0) and ((D)+1).

(a) Complete device ((D)+0)
This device is turned ON by the END processing of the scan for which ZP.PFWRT instruction is completed, and turned OFF by the next END processing.

(b) Complete state display device ((D)+1)
This device is turned ON and OFF according to the state in which ZP.PFWRT instruction is completed.
- When completed normally : Kept unchanged at OFF.
- When completed abnormally : This device is turned ON by the END processing of the scan for which ZP.PFWRT instruction is completed, and turned OFF by the next END processing. (Same ON/OFF operation as the complete device.)

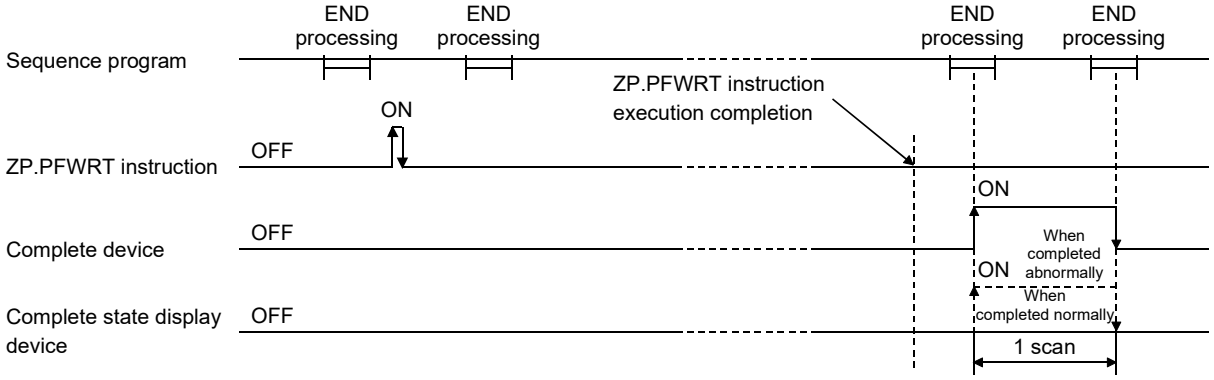

[Errors]

(1) When a dedicated instruction is completed abnormally, the error complete signal ((D)+1) is turned ON, and the error code is stored in the complete status ((S)+1). Check and take measures against the error referring to Section 16.4 "List of errors".

[Precautions]

(1) Do not turn ON the power and reset the PLC CPU while parameters, positioning data and block start data are written to the flash ROM using the ZP.PFWRT instruction.
A parameter error will occur or normal positioning start will become impossible because the parameters, positioning data and block start data are not written normally to the flash ROM.
If this occurs, restart the operation by the method shown below.
- For GX Works2, write the parameters, positioning data and block start data again to the flash ROM.
- For a sequence program, write the parameters, positioning data and block start data to the Simple Motion module after initializing the parameters (ZP.PINIT instruction execution and others).
Then execute the ZP.PFWRT instruction again.

(2) Writing to the flash ROM is up to 100,000 times.
If writing to the flash ROM exceeds 100,000 times, the writing to the flash ROM will become impossible.

(3) After the power ON and PLC CPU reset operation, writing to the flash ROM using a sequence program is limited to up to 25 times. (Not limited to up to 25 times when writing to the flash ROM is carried out by GX Works2.)
If the 26th or more writing is requested after the power ON/PLC CPU reset operation, the error "Flash ROM write number error" (error code: 805) will occur, and the writing will be disabled. If a flash ROM write error occurs by one writing to the flash ROM, check and correct the flash ROM writing program. Then reset the error or turn ON the power and reset the PLC CPU again.

(4) The ZP.PFWRT instruction can only be executed when the READY signal [X0] is turned OFF.
When the READY signal [X0] is turned ON, the ZP.PFWRT instruction cannot be executed.
Before executing the ZP.PFWRT instruction, turn OFF the PLC READY signal [Y0] and then turn OFF the READY signal [X0].

(5) When the PLC READY signal [Y0] is turned ON, the error "SSCNET communication error" (error code: 1205) occurs, "Rotation direction selection/travel direction selection (PA14)" is changed by sequence program or the GX Works2 after the servo parameter is transmitted to servo amplifier (LED of the servo amplifier is indicated "b_", "C_", or "d_").
When "Rotation direction selection/travel direction selection (PA14)" is changed, transmit the servo parameter to servo amplifier.

[Program example]

Program used to write the parameters and positioning data stored in the buffer memory to the flash ROM when X3D is turned ON in QD77MS4.

(1) Flash ROM write program

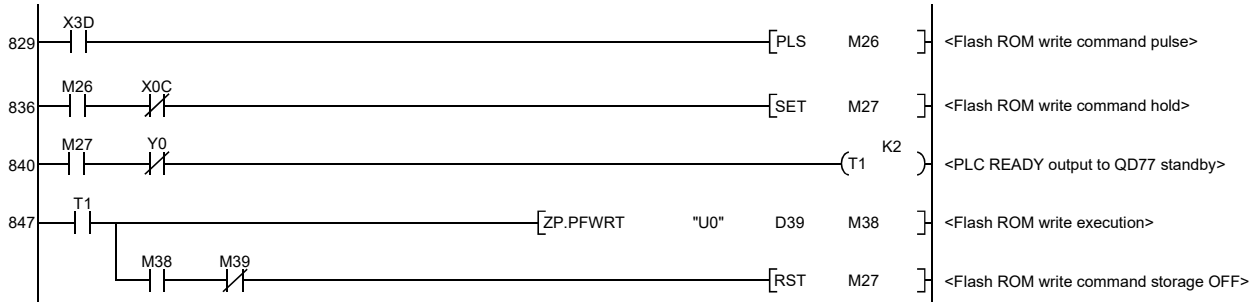

(2) Flash ROM write program (when dedicated instruction is not used)

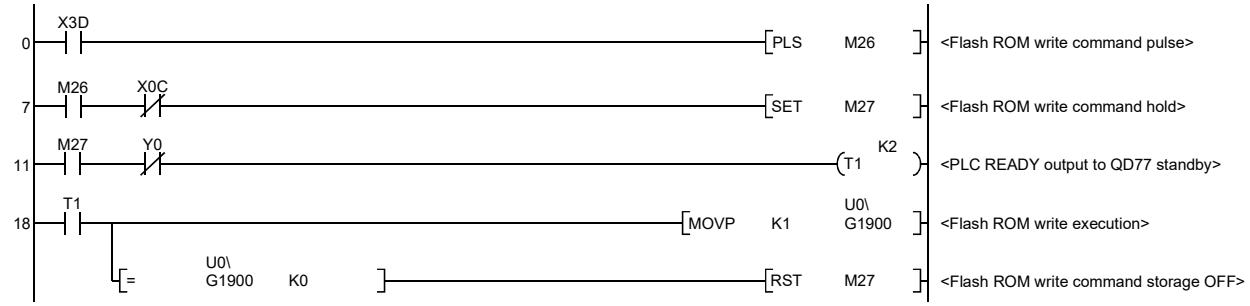

15.6 ZP.PINIT

This dedicated instruction is used to initialize the setting data of the Simple Motion module.

Setting data	Usable device								
	Internal device		File register	Link direct device J__		Intelligent function module U_\G_	Index register Zn	Constant	Others
	Bit	Word		Bit	Word			K, H	
(S)	–	○		–				–	–
(D)	○	○	–	–				–	–

[Instruction symbol] [Execution condition]

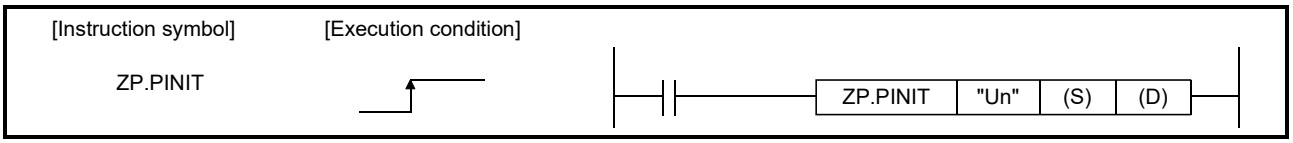

[Setting data]

Setting data	Setting details	Setting side (Note-1)	Data type
"Un"	Head I/O number of Simple Motion module (00 to FE: High-order two digits of I/O number expressed in three digits)	User	BIN 16 bits
(S)	Head number of a device in which control data is stored	–	Device name
(D)	Head number of a bit device which turns ON the operation by one scan at the time of completion of the instruction. If the instruction is completed abnormally, ((D) + 1) will also be turned ON.	System	Bit

Note) The file register of each of the local device and the program cannot be used as a device for setting data.

(Note-1): The data on the setting side is as follows.
- User : Data before the execution of dedicated instructions is stored by user.
- System: Data after the execution of dedicated instruction is stored by PLC CPU.

[Control data]

Device	Item	Setting data	Setting range	Setting side (Note-1)
(S)+0	System area	–	–	–
(S)+1	Complete status	The state at the time of completion is stored. 0 : Normal completion Other than 0: Abnormal completion (error code) (Note-2)	–	System

(Note-1): The data on the setting side is as follows.
- User : Data before the execution of dedicated instructions is stored by user.
- System: Data after the execution of dedicated instruction is stored by PLC CPU.

(Note-2): Refer to Section 16.4 for error codes at abnormal completion.

[Functions]

(1) This dedicated instruction is used to return the setting data set in the buffer memory of Simple Motion module and flash ROM to their factory-set data (initial values).
Refer to Section 14.2 for initialized setting data.

(2) The ZP.PINIT instruction completion can be confirmed using the complete devices ((D)+0) and ((D)+1).

(a) Complete device ((D)+0)
This device is turned ON by the END processing of the scan for which ZP.PINIT instruction is completed, and turned OFF by the next END processing.

(b) Complete state display device ((D)+1)
This device is turned ON and OFF according to the state in which ZP.PINIT instruction is completed.
- When completed normally : Kept unchanged at OFF.
- When completed abnormally : This device is turned ON by the END processing of the scan for which ZP.PINIT instruction is completed, and turned OFF by the next END processing. (Same ON/OFF operation as the complete device.)

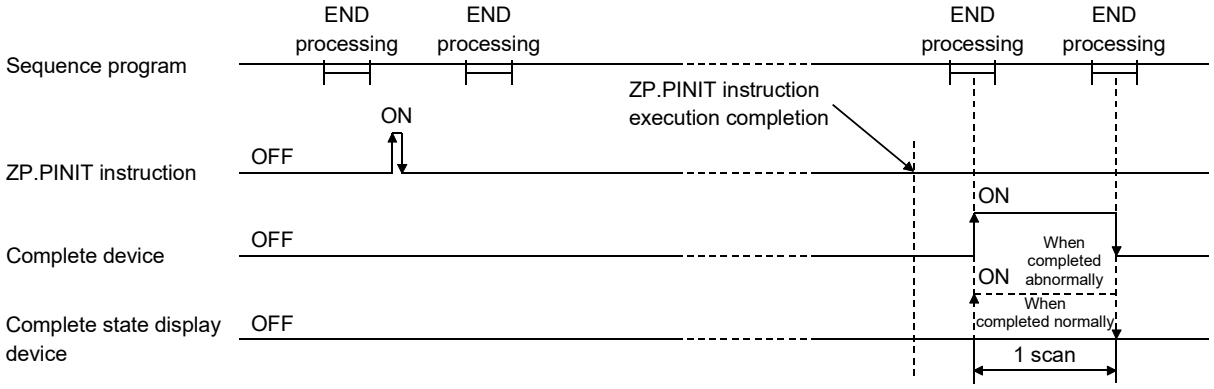

[Errors]

(1) When a dedicated instruction is completed abnormally, the error complete signal ((D)+1) is turned ON, and the error code is stored in the complete status ((S)+1). Check and take measures against the error referring to Section 16.4 "List of errors".

[Precautions]

(1) The ZP.PINIT instruction can only be executed when the READY signal [X0] is turned OFF.
When the READY signal [X0] is turned ON, the ZP.PINIT instruction cannot be executed.
Before executing the ZP.PINIT instruction, turn OFF the PLC READY signal [Y0] and then turn OFF the READY signal [X0].

(2) Writing to the flash ROM is up to 100,000 times.
If writing to the flash ROM exceeds 100,000 times, the writing to the flash ROM will become impossible.

(3) After the power ON and PLC CPU reset operation, writing to the flash ROM using a sequence program is limited to up to 25 times. (Not limited to up to 25 times when writing to the flash ROM is carried out by GX Works2.)
If the 26th or more writing is requested after the power ON/PLC CPU reset operation, the error "Flash ROM write number error" (error code: 805) will occur, and the writing will be disabled. If a flash ROM write error occurs by one writing to the flash ROM, check and correct the flash ROM writing program. Then reset the error or turn ON the power and reset the PLC CPU again.

[Program example]

The following program initializes the parameters in buffer memory and flash ROM when X3C turns ON in QD77MS4.

(1) Parameter initialization program

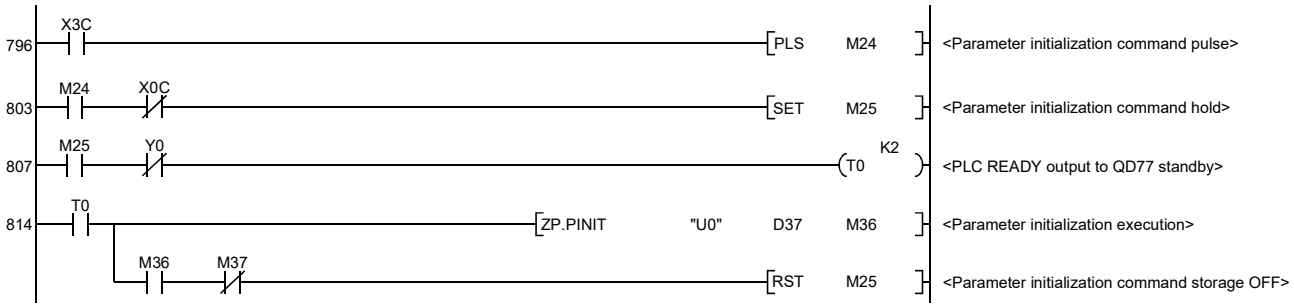

(2) Parameter initialization program (when dedicated instruction is not used)

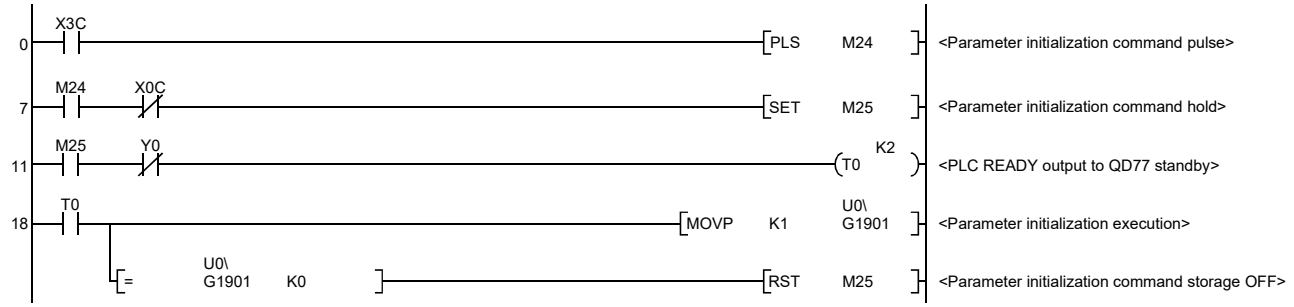

MEMO

Chapter 16 Troubleshooting

The "errors" and "warnings" detected by the Simple Motion module are explained in this chapter.

Errors can be confirmed with the LED display of Simple Motion module and GX Works2. When an error or warning is detected, confirm the detection details and carry out the required measures.

16.1 Checking errors using GX Works2 ..... 16- 2
16.2 Troubleshooting 16- 5
16.3 Error and warning details 16- 9
16.4 List of errors 16- 16
16.4.1 QD77MS detection error 16- 16
16.4.2 Servo amplifier detection error 16- 52
16.5 List of warnings 16- 54
16.5.1 QD77MS detection warning 16- 54
16.5.2 Servo amplifier detection warning 16- 66

16.1 Checking errors using GX Works2

Error codes corresponding to the errors occurred in the Simple Motion module can be checked either on the following screen of GX Works2.
Select the screen according to the purpose and usage.
• "Module's Detailed Information" screen
• "Error History" screen

(1) Checking errors on the "Module's Detailed Information" screen

Select [Diagnostics]→ [System Monitor] on GX Works2.
Select "QD77MS" for "Main block" and click the [Detailed information] button.
The "Module's Detailed Information" screen for the QD77MS appears and error code, error details, and corrective actions can be checked.

(2) Checking errors on the "Error History" screen.

POINT

The PLC CPU and GX Works2 that support the module error collection function are required to confirm errors on the "Error History" screen. Refer to each PLC CPU manual for the version of the PLC CPU or GX Works2 that supports the module error collection function.

On the "Error History" screen, the error logs of the QD77MS are displayed in a list together with the error logs of other modules. The logs can be output to a CSV format file. The error codes and the time of error occurrence can be checked even after the PLC CPU is powered off and then on or reset.
Select [Diagnostics] → [System Monitor] → [System Error History] button on GX Works2.

(a) Error History List
Module error logs are displayed in a list.

(b) Error and Solution, Intelligent Module Information

• Error and Solution

Details of the selected in the "Error History List" and its corrective action are displayed.

• Intelligent Module Information

The status of Simple Motion module when the error selected in the "Error History List" occurred is displayed.

Item	Description
Start axis	The axis No. requested to start is stored.
Positioning start No.	The start No. at positioning start is stored. (Note-1)
Axis in which the error occurred	The axis No. in which the error occurred is stored.
Axis error occurrence (Data No.)	The positioning data No. currently being executed in which the error occurred is stored. (Note-1), (Note-2)
Command position value	The command position value of the axis in which the error occurred (at error occurrence) is stored.
State of the input signal [X0 to XF]	The status of input signals [X0 to XF] (at error occurrence) is stored (in binary). (Note-5)
State of the input signal [X10 to X1F]	The status of input signals [X10 to X1F] (at error occurrence) is stored (in binary). (Note-5)
State of the output signal [Y0 to YF]	The status of output signals [Y0 to YF] (at error occurrence) is stored (in binary). (Note-5)
State of the output signal [Y10 to Y1F]	The status of output signals [Y10 to Y1F] (at error occurrence) is stored (in binary). (Note-5)
• Axis in which the error occurred (Upper limit signal) • Axis in which the error occurred (Lower limit signal) • Axis in which the error occurred (Stop signal) • Axis in which the error occurred (External command signal/switching signal) • Axis in which the error occurred (Proximity signal)	The status of external input signals of the axis in which the error occurred (at error occurrence) is stored. (Note-5)
Servo alarm	The alarm code detected by servo amplifier is stored. (Note-3), (Note-5)
Driver operation alarm	The driver operation alarm detected by servo amplifier is stored. (Note-4), (Note-5)

(Note-1): "0" is stored at the servo alarm occurrence.

(Note-2): The current cam data No. is displayed for output axis of synchronous control.

(Note-3): "0" is stored unless the servo alarm occurs.

(Note-4): "0" is stored unless the driver operation alarm occurs.

(Note-5): Always "0" is output for the command generation axis.

(c) [Create CSV File] button

The module error logs are output to a CSV format file.

POINT

(1) If errors frequently occur in the Simple Motion module, "*HST.LOSS*" (instead of an actual error code) may be displayed in the Error Code column.
(Display example)

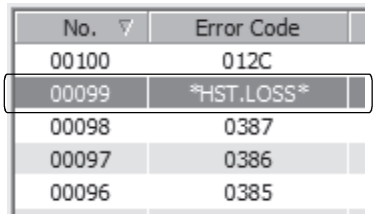

No.	Error Code
00100	012C
00099	*HST.LOSS*
00098	0387
00097	0386
00096	0385

If "*HST.LOSS*" is frequently displayed, set a larger value for the number of errors collected per scan in the PLC RAS tab of the PLC Parameter dialog box.
For the setting, refer to the "User's Manual (Function Explanation, Program Fundamentals)" of the CPU module in use.

(2) If the error occurred at the simultaneous start, the axis No. in which the error is detected is stored in the "Starting axis" in Error History.

16.2 Troubleshooting

(1) Troubleshooting using the LEDs

Check items and corrective actions for troubleshooting using the indicator LEDs of the Simple Motion module are described below.

(a) When the RUN LED turns off.

Check item	Action
Is the power supplied?	Check that the voltage supplied to the power supply module is within the rated range.
Is the power supply capacity sufficient?	Calculate the total current consumption of the connected modules (PLC CPU module, I/O modules, and intelligent function modules) and check that the power supply capacity is not insufficient.
Is the module connected correctly?	Check the state of connection with the module.

If there is no problem on the above check items, a watchdog timer error may have occurred. Reset the PLC CPU and check that the RUN LED turns on. If not, the possible cause is a hardware failure. Please consult your local Mitsubishi representative, explaining a detailed description of the problem.

(b) When the ERR. LED turns on

Check item	Action
Is there a system error?	An error may have occurred in the PLC CPU. Check the error code and take a corrective action.

(c) When the ERR. LED and axis LED flash

Check item	Action
Is there an axis error?	Check the error code and take the action described in Section 16.4.

(d) When the ERR. LED flashes

Check item	Action
Is there a synchronous encoder axis error?	Check the error code and take the action described in Section 16.4.
Is there a command generation axis error?	Check the error code and take the action described in Section 16.4.

(e) When all LEDs turn on

Reset the PLC CPU and check that the module is in the normal status. If all LEDs still turn on, the possible cause is a hardware failure. Please consult your local Mitsubishi representative, explaining a detailed description of the problem.

(2) Troubleshooting when a motor does not rotate

Check items and corrective actions for troubleshooting when a motor does not rotate are described below.

POINT

The following signals must be ON for the Simple Motion module to operate (excluding when the "positioning test function" of GX Works2 is used).

- READY signal [X0]
- Servo READY signal
- Upper limit signal and Lower limit signal

The ON status of signals can be checked by the following monitor data.

- Servo READY signal: "[Md.108] Servo status (high-order buffer memory address)" (b0, b1).
- Upper limit signal and Lower limit signal: "[Md.30] External input signal" (b0, b1).

	Buffer memory address (high-order)	
	QD77MS2/QD77MS4	QD77MS16
[Md.108] Servo status: b0, b1	877+100n	2477+100n

n: Axis No.-1

Check item	Action
Is the PLC READY signal turned ON?	Review the program to turn ON the PLC READY signal.
Is the servo amplifier powered ON?	Power on the servo amplifier.
Is there an error in the servo amplifier?	Check the error code of the servo amplifier and take a corrective action.
Is the wiring between the Simple Motion module and servo amplifier correct?	Check the wiring between the Simple Motion module and servo amplifier, and correct it.
Is the wiring between the servo amplifier and motor correct?	Check the wiring between the servo amplifier and motor, and correct it.
Is the wiring of the limit signal correct?	Check the wiring and logic setting of the limit signal, and correct the wiring.
Is there an error in the Simple Motion module? (ERR. LED is on or flashing)	Check the error code and take a corrective action.
Isn't the value in "[Md.26] Axis operation status" "1: stopped"?	• Review the stop program. • Review whether the stop signal (STOP) is not input erroneously.
Is the value in "[Md.20] Command position value" changed after positioning control is performed?	Review the start program.
Is the cumulative pulse of servo amplifier changed after positioning control is performed?	Refer to the instruction manual or manual of each servo amplifier and check that the function to suppress the motor rotation is not working.
Is the speed change 0 flag ([Md.31] Status: b10) ON?	When the speed is changed 0 by the speed change function, review the speed value to be changed.

If a motor does not rotate even after the above items are checked, the possible cause is a hardware failure.
Please consult your local Mitsubishi representative, explaining a detailed description of the problem.

(3) Troubleshooting when a motor does not rotate as intended.

Check items and corrective actions for troubleshooting when a motor does not rotate as intended are described below.

(a) When a motor rotates only in the opposite direction

Check item	Action
Is the value in "Rotation direction selection/ travel direction selection (PA14)" correct?	Check that the value in "Rotation direction selection/ travel direction selection (PA14)" matches the settings of servo amplifier. When "Rotation direction selection/travel direction selection (PA14)" has been changed, turn the servo amplifier power supply ON again from OFF or reset the controller, and execute the home position return.

(b) When a motor does not rotate at the set speed

<table>
<tr><th>Check item</th><th>Action</th></tr>
<tr><td rowspan="2">Does the value in "[Md.28] Axis speed command" (Note) indicate the set speed?</td><td>[When "[Md.28] Axis speed command" (Note) indicates the set speed]
• Check that the values in "[Pr.2] Number of pulses per rotation (AP)", "[Pr.3] Movement amount per rotation (AL)", and "[Pr.4] Unit magnification (AM)" meet the system.
• When the servo amplifier has the electronic gear function, check that the settings meet the system.</td></tr>
<tr><td>[When "[Md.28] Axis speed command" (Note) does not indicate the set speed]
• Check that the speed is not limited by the value in "[Pr.8] Speed limit value".
• In the JOG operation, check that the speed is not limited by the value in "[Pr.31] JOG speed limit value".
• In the JOG operation, check that Forward run JOG start signal and Reverse run JOG start signal do not repeatedly turn ON and OFF.
<table>
<tr><th>Signal</th><th>QD77MS2/QD77MS4</th><th>QD77MS16</th></tr>
<tr><td>Forward run JOG start signal</td><td>Y8, YA, YC, YE</td><td>[Cd.181] Forward run JOG start</td></tr>
<tr><td>Reverse run JOG start signal</td><td>Y9, YB, YD, YF</td><td>[Cd.182] Reverse run JOG start</td></tr>
</table>
</td></tr>
</table>

(Note): Speed control mode and continuous operation to torque control mode: "[Md.122] Speed during command"

(c) When the set position is not reached

<table>
<tr><th>Check item</th><th>Action</th></tr>
<tr><td rowspan="2">Does the value in "[Md.20] Command position value" indicate the intended position when the motor stops?</td><td>[When the position set in "[Md.20] Command position value" is reached]
• Check that the values in "[Pr.2] Number of pulses per rotation (AP)", "[Pr.3] Movement amount per rotation (AL)", and "[Pr.4] Unit magnification (AM)" meet the system.
• When the servo amplifier has the electronic gear function, check that the settings meet the system.</td></tr>
<tr><td>[When the position set in "[Md.20] Command position value" is not reached]
• Check that the motor is not stopped by Axis stop signals. If a motor is stopped by them, the value "1: stopped" is stored in "[Md.26] Axis operation status".
<table>
<tr><th>Signal</th><th>QD77MS2/QD77MS4</th><th>QD77MS16</th></tr>
<tr><td>Axis stop signal</td><td>Y4 to Y7</td><td>[Cd.180] Axis stop</td></tr>
</table>
</td></tr>
</table>

(d) When a communication timeout occurs in GX Works2

Check item	Action
Is the operation cycle set for the operation cycle time sufficiently long?	Correct the positioning or change the setting of "[Pr.96] Operation cycle setting" to a longer value. In addition, if a communication timeout occurs when flash ROM writing or parameter initialization is performed from GX Works2, reduce the communication load by measures such as powering off the connected servo amplifier to shorten the operation processing time.

(e) When a servo amplifier cannot be connected

Check item	Action
Is there any poor contact of a connector or cable disconnection?	Check the SSCNETⅢ cable. (Check for connection failure and damage)

16.3 Error and warning details

[1] Errors

■ Types of errors

Errors detected by the Simple Motion module include parameter setting range errors, errors at the operation start or during operation and errors detected by servo amplifier.

(1) Errors detected by the Simple Motion module include parameter setting range errors
The parameters are checked when the power is turned ON and at the rising edge (OFF → ON) of the PLC READY signal [Y0]. An error will occur if there is a mistake in the parameter setting details at that time.
When this kind of error occurs, the READY signal [X0] does not turn ON.
To cancel this kind of error, set the correct value in the parameter for which the error occurred, and then turn ON the PLC READY signal [Y0].

POINT
Re-set the parameters after parameter initialization (refer to Section 14.2) if errors (error code: 900 to 999) frequently occur and the Simple Motion module does not start.

(2) Errors at the operation start or during operation (Simple Motion module detection errors)
These are errors that occur at the operation start or during operation when the positioning control, JOG operation, or inching operation is used. If an axis error occurs during interpolation operation, the error code will be stored in both the reference axis and the interpolation axis.
Note that, in the following cases (a) and (b), the axis error No. will be stored only in the reference axis during analysis of the positioning data set in each point of the positioning start data table.
(a) When the interpolation axis is BUSY.
(b) When the error occurs in positioning data or parameters unrelated to interpolation control.

If the error occurs at the simultaneous start of a positioning operation, the axis error storage details will differ depending on whether the error occurred before or after the simultaneous start.
- If the error (illegal axis No., other axis BUSY, etc.) occurs before the simultaneous start, the error "Error before simultaneous start" (error code: 501) will occur for the start axis.
- If the error (positioning data error, software stroke limit error, etc.) occurs after the simultaneous start, an error code corresponding to the axis in which the error occurred will be stored. Because a simultaneous start cannot be carried out due to this, the error "Simultaneous start not possible" (error code: 532) will be stored in all axes in which an error has not occurred.

The axis operation status will be displayed as "error occurring" for axes in which an error occurred.
If an error occurs during operation, any moving axes will deceleration stop, and their operation status will be displayed as "error occurring".
All axes will decelerate to a stop during interpolation operations, even if the error occurs in only one axis.

(3) Servo amplifier detection errors
The errors that occur when the hardware error of the servo amplifier or servo motor or the servo parameter error occurs.
The servo is turned off at the error occurrence and the axis stops.
Remove the error factor and reset the error, reset the controller, or turn the servo amplifier power supply ON again from OFF.

(4) Types of error codes

Error code	Classification of errors
001 to 009	Fatal errors
100 to 199	Common errors
200 to 299	HPR errors
300 to 399	JOG operation errors
400 to 499	Manual pulse generator operation errors
500 to 599	Positioning operation errors
600 to 699	Synchronous control input axis errors
700 to 799	Synchronous control output axis errors
800 to 899	I/F (Interface) errors
900 to 1099	Parameter setting range errors
1201 to 1209	Encoder errors
2000 to 2999	Servo amplifier errors
61440 to 61695	Errors for servo driver VCII series
61696 to 61951	Errors for inverter
61952 to 62207	Errors for stepping driver AlphaStep/5-phase
62208 to 62463	Errors for IAI electric actuator controller
62464 to 62719	Errors for servo driver VPH series

■ Error storage

When an error occurs, the error detection signal turns ON, and the error code corresponding to the error details is stored in the following buffer memory address ([Md.23] Axis error No.) for axis error No. storage. Note that there is a delay of up to operation cycle after the error detection signal turns ON until the error code is stored.

Axis No.	QD77MS2		QD77MS4		QD77MS16	
	Error detection signal	Buffer memory address	Error detection signal	Buffer memory address	Error detection signal	Buffer memory address
1	X8	806	X8	806	[Md.31] Status: b13	2406
2	X9	906	X9	906		2506
3			XA	1006		2606
4			XB	1106		2706
5						2806
to						to
16						3906
201	[Md.31] Status: b13	60917	[Md.31] Status: b13	60917		60917
202		61037		61037		61037
203				61157		61157
204				61277		61277
to						to
208						61757

A new error code is stored in the buffer memory address ([Md.23] Axis error No.) for axis error storage every time an error occurs.

POINT

When any of the following errors that are independent of an axis is detected, it is stored in the axis error No. of axis 1. (These errors are stored in the axis error No. of axis 1 for the system which does not use the axis 1.)
Error code: 001, 002, 107, 190, 800, 802, 805, 999

When an alarm occurs on servo amplifier, the alarm No. displayed in LED of servo amplifier is stored in the following buffer memory address ([Md.114] Servo alarm). Check the error details and remedies by this servo alarm details.

Axis No.	Buffer memory address		
	QD77MS2	QD77MS4	QD77MS16
1	888	888	2488
2	988	988	2588
3		1088	2688
4		1188	2788
5			2888
to			to
16			3988

[2] Warnings

■ Types of warnings

Warnings detected by the Simple Motion module include system warnings, axis warnings and warnings detected by servo amplifier.

(1) Simple Motion module detection system warnings
The types of system warnings are shown below.
- System control data setting warnings
  An axis warning for axis 1 will occur.
- Positioning data setting warnings
  An axis warning for each axis will occur.
  Note that a warning will occur for the reference axis when an interpolation designation or axis setting warning occurs.

(2) Simple Motion module detection axis warnings
- Axis warnings occur due to setting warnings from operations such as positioning operations, JOG operations or manual pulse generator operations.
- Axis warnings occur due to system warnings.
  The axis operation status does not change even if an axis warning occurs.

(3) Servo amplifier detection warnings
The warnings that occur when the hardware error of the servo amplifier or servo motor occurs or the servo parameter is inapplicable.
The servo may not be turned off depending on the warning. However, an error occurs or the operation cannot be executed normally if the warning is remained.
When the warning cause is removed, warning is automatically released in the servo amplifier. However, the state that the warning occurs is continued in the Simple Motion module.
Reset it if necessary.

(4) Types of warning codes

Warning code	Classification of warnings
100 to 199	Common warnings
200 to 299	HPR warnings
300 to 399	JOG operation warnings
400 to 499	Manual pulse generator operation warnings
500 to 599	Positioning operation warnings
600 to 699	Synchronous control input axis warnings
700 to 799	Synchronous control output axis warnings
800 to 899	Cam data operation warnings
900 to 999	System control data setting range check warnings
2000 to 2999	Servo amplifier warnings (The contents of warnings vary in the model of servo amplifier.)
61440 to 61695	Warnings for servo driver VCII series
61696 to 61951	Warnings for inverter
62464 to 62719	Warnings for servo driver VPH series

■ Warning storage

(1) When an axis warning occurs, the warning code corresponding to the warning details is stored in the following buffer memory ([Md.24] Axis warning No.) for axis warning No. storage.

	Buffer memory address		
Axis No.	QD77MS2	QD77MS4	QD77MS16
1	807	807	2407
2	907	907	2507
3		1007	2607
4		1107	2707
5			2807
to			to
16			3907
201	60917	60917	60917
202	61037	61037	61037
203		61157	61157
204		61277	61277
to			to
208			61757

A new warning code is stored in the buffer memory address ([Md.24] Axis warning No.) for axis warning storage every time a warning occurs.

(2) When an axis warning occurs in a positioning operation, etc., "axis warning detection ([Md.31] Status: b9)" of the following buffer memory for axis status storage turns ON.

	Buffer memory address		
Axis No.	QD77MS2	QD77MS4	QD77MS16
1	817	817	2417
2	917	917	2517
3		1017	2617
4		1117	2717
5			2817
to			to
16			3917

When a warning occurs on servo amplifier, the warning No. displayed in LED of servo amplifier is stored in the following buffer memory address ([Md.114] Servo alarm). Check the warning details and remedies by this servo alarm details.

Axis No.	Buffer memory address		
	QD77MS2	QD77MS4	QD77MS16
1	888	888	2488
2	988	988	2588
3		1088	2688
4		1188	2788
5			2888
to			to
16			3988

[3] Resetting errors and warnings

Remove the cause of error or warning following the actions described in Section 16.4 and 16.5, before cancel an error or warning state by resetting the error.

■ How to clear errors or warnings

An error or warning state is canceled after the following processing is carried out by setting "1" in the address of the buffer memory for resetting axis error ([Cd.5] Axis error reset).

- Axis error detection signal is turned OFF.
- "[Md.23] Axis error No." is cleared.
- "[Md.24] Axis warning No." is cleared.
- "[Md.26] Axis operation status" is changed from "Error" to "Standby".
- "Axis warning detection ([Md.31] Status: b9)" is turned OFF.

POINT
When servo alarms cannot be reset even if error reset is requested, "0" is not stored in "[Cd.5] Axis error reset" by Simple Motion module. It remains "1". Set "0" in "[Cd.5] Axis error reset" and then set "1" to execute the error reset again by user side.

[4] Confirming the error and warning definitions

The error and warning definitions can be confirmed with the error codes and warning codes. Confirming them requires GX Works2.

■ Confirming the error definitions

- System monitor of GX Works2 (Refer to Section 16.1.)
- Error history screen of GX Works2 (Simple Motion Module Setting Tool) (Refer to the help in "Simple Motion Module Setting Tool".)

■ Confirming the warning definitions

- Warning history screen of GX Works2 (Simple Motion Module Setting Tool) (Refer to the help in "Simple Motion Module Setting Tool".)

16.4 List of errors

The following table shows the error details and remedies to be taken when an error occurs.

16.4.1 QD77MS detection error

Classification of errors	Error code	Error name	Error	Operation status at error occurrence	
—	000	(Normal status)	—	—	
Fatal errors	001	Faults	Hardware is faulty.	The system stops.	
	002	Internal circuit fault			
Common errors	101	PLC READY OFF during operation	The PLC READY signal [Y0] is turned OFF during operation.	The system stops with the setting (deceleration stop/rapid stop) of the detailed parameter 2 rapid stop selection (stop group 2). (Note that the deceleration stop only occurs during the manual pulse generator operation.)	
	102	Servo READY signal OFF during operation	The servo READY signal is turned OFF during operation.	During operation: The system stops immediately.	
	103	Test mode faults during operation	The personal computer cannot communicate with the CPU module.	The system stops with the setting (deceleration stop/rapid stop) of the detailed parameter 2 rapid stop selection (stop group 2). (Note that the deceleration stop only occurs during the manual pulse generator operation.)	
	104	Hardware stroke limit (+)	The hardware stroke limit (upper limit signal FLS) is turned OFF during operation.	The system stops with the setting (deceleration stop/rapid stop) of the detailed parameter 2 rapid stop selection (stop group 1). (Note that the deceleration stop only occurs during the manual pulse generator operation.)	
			Start is requested when the hardware stroke limit (upper limit signal FLS) is turned OFF.	The system does not start.	
	105	Hardware stroke limit (–)	The hardware stroke limit (lower limit signal RLS) is turned OFF during operation.	The system stops with the setting (deceleration stop/rapid stop) of the detailed parameter 2 rapid stop selection (stop group 1). (Note that the deceleration stop only occurs during the manual pulse generator operation.)	
			Start is requested when the hardware stroke limit (lower limit signal RLS) is turned OFF.	The system does not start.	
	106	Stop signal ON at start	Start is requested when a stop signal is turned ON.	The system does not start.	

	Related buffer memory address		Set range (Setting with sequence program)	Remedy
	QD77MS2 QD77MS4	QD77MS16		
	—	—	—	—
	—	—	—	Check that there is no influence from noise.
	—	—	—	Review the program which turns ON/OFF PLC READY signal [Y0].
	—	—	—	Check the servo amplifier power, wiring with the servo amplifier, and connection of connectors.
	—	—	—	Check that there is no error on the personal computer side I/F to which a cable is connected.
	—	—	—	After making an axis error reset (refer to [3] in Section 16.3), perform manual control operation (refer to Chapter 11) to move the axis to the other position in order that the upper limit signal (FLS) will not turn OFF.
	—	—	—	• Check the wiring of upper limit signal FLS. • Check if the specification of the limit switch and the setting of the "[Pr.22] Input signal logic selection" match. • If hardware stroke limit (limit switch) is unnecessary system for installation, wire to always turn ON the upper limit signal (FLS) input of the Simple Motion module.
	—	—	—	After making an axis error reset (refer to [3] in Section 16.3), perform manual control operation (refer to Chapter 11) to move the axis to the other position in order that the lower limit signal (RLS) will not turn OFF.
	—	—	—	• Check the wiring of lower limit signal RLS. • Check if the specification of the limit switch and the setting of the "[Pr.22] Input signal logic selection" match. • If hardware stroke limit (limit switch) is unnecessary system for installation, wire to always turn ON the lower limit signal (RLS) input of the Simple Motion module.
	—	—	—	After confirming the stop command status, then review the timing of start.

n: Axis No.-1

Classification of errors	Error code	Error name	Error	Operation status at error occurrence	
Common errors	107	READY OFF → ON during BUSY	The PLC READY signal is turned from OFF to ON when BUSY signal is turned ON.	The READY signal [X0] is not turned ON.	
	108	Start not possible	Start is requested when start is not possible in the axis operation state.	The system does not start positioning.	
	109	Servo amplifier series error	The set series of the servo parameter "[Pr.100] Servo series" and the series of connected servo amplifier are mismatch.	The communication between servo amplifiers or later of target axis is not executed. (The servo amplifier's LED display remains "Ab".)	
	110	Unsupported servo amplifier connection	A servo amplifier/driver which is not supported is connected.	The target axis is not connected to the servo amplifier.	
	120	Position command error	A position command to be sent to the servo amplifier is equal to or larger than "[Pr.135] Position command error check threshold".	A servo warning "Controller forced stop warning" (warning No.: E7) occurs, and all axes are stopped immediately.	
	121	Deviation counter error	An absolute value of a deviation counter received from the servo amplifier is larger than "[Pr.136] Deviation counter error check threshold".		
	122	Servo amplifier send data error	An error has occurred in the consistency check of data to be sent to the servo amplifier.		
	190	Operation cycle time over error	The calculation process time of the positioning etc. exceeds the operation cycle.	The operation continues.	
Home position return (HPR)	201	Start at HP	• When the HPR retry invalid is set, the proximity dog method machine HPR is started with the HPR complete flag turned ON. • Scale origin signal detection method machine HPR is started with the HPR complete flag turned ON and the proximity dog signal turned ON.	The machine HPR does not start.	
	203	Dog detection timing fault	The proximity dog signal is turned OFF during the deceleration from an HPR speed to a creep speed by the proximity dog method machine HPR.	The system stops with the setting (deceleration stop/rapid stop) of the detailed parameter 2 rapid stop selection (stop group 3). (Note that the deceleration stop only occurs during the manual pulse generator operation.)	

	Related buffer memory address		Set range (Setting with sequence program)	Remedy
	QD77MS2 QD77MS4	QD77MS16		
	—	—	—	Turn ON the PLC READY signal [Y0] with the BUSY signals of all axes OFF.
	—	—	—	Do not request the start when the axis operation state is other than "standby", "stop", and "step standby".
	30100+200n	28400+100n	<Servo series> 0, 1, 3, 4, 6, 7, 32, 48, 64, 96, 97, 98, 99, 128	Match the set series of the servo parameter "[Pr.100] Servo series" to the series of connected servo amplifier.
	30100+200n	28400+100n	<Servo series> 97	Connect supported servo amplifier/driver.
	136+150n 137+150n		<Position command error check threshold> 1 to 2147483647 [rpm or mm/s (when a linear servo is used)]	1. Check the value of "[Pr.135] Position command error check threshold". 2. Check the SSCNETⅢ cable. 3. Check the servo motor and encoder cable. 4. Take measures against noise. If the same error is displayed again even after taking the above measures, the hardware of the Simple Motion module is faulty. Please consult your sales representative.
	138+150n 139+150n		<Deviation counter error check threshold> 1 to 2147483647 [PLS]	1. Check the value of "[Pr.136] Deviation counter error check threshold". 2. Check the SSCNETⅢ cable. 3. Check the servo motor and encoder cable. 4. Take measures against noise. If the same error is displayed again even after taking the above measures, the hardware of the Simple Motion module is faulty. Please consult your sales representative.
	—	—	—	Check "[Md.133] Operation cycle over flag", and if an operation cycle over has occurred, then review the content of the positioning or change "[Pr.96] Operation cycle setting" to a longer setting than the current one. If the same error is displayed again even after taking the above measures, the hardware of the Simple Motion module is faulty. Please consult your sales representative.
	147	105	—	Review the content of the positioning or "[Pr.96] Operation cycle setting" longer than the current setting.
	78+150n		<HPR retry> 0, 1	• Validate the HPR retry function (set value: 1). (Refer to Section 13.2.1). • Move the work piece from the current position (on HP) using the manual control operation (refer to Chapter 11), then carry out a machine HPR again.
	74+150n 75+150n		<HPR speed> 1 to 1000000000 [PLS/s] 1 to 2000000000 [×10^{-2}mm/min or others]	• Lower the HPR speed. • Increase the dog signal input time. (Refer to Section 8.2.3)

n: Axis No.-1

Classification of errors	Error code	Error name	Error	Operation status at error occurrence	
Home position return (HPR)	206	Count method movement amount fault	In the count method 1) and 2) machine HPR, a parameter "Setting for the movement amount after proximity dog ON" is smaller than a distance necessary for deceleration stop from an HPR speed.	At start : The system does not operate. During operation: The system stops with the setting (deceleration stop/rapid stop) of the detailed parameter 2 rapid stop selection (stop group 3).	
	207	HPR request ON	The HPR request flag is turned ON when a fast -HPR is started (positioning start No. 9002).	The fast -HPR does not start.	
	209	HPR restart not possible	The restart command is turned ON after the machine HPR is stopped using a stop signal.	The restart is not carried out.	
	210	HPR zero point not passed	The zero point is not passed when the dog method, count method or scale origin signal detection method HPR is re-started, or data set method HPR is executed.	The HPR does not complete.	
	211	ZCT read error	The data is not loaded from the servo amplifier properly upon the HPR.		
	212	ABS reference point read error	• The data is not loaded from the servo amplifier properly upon the HPR. • The in-position signal is not turned ON within 1.5 seconds after moving an axis to the HP.		
	230	Encoder ABS data not established	HPR is started on the direct drive motor when the absolute position data of the encoder has not been established.	The HPR does not start.	
	231	Z-phase passing parameter invalid	Servo parameter "Function selection C-4 (PC17)" is not set to "0: Need to pass servo motor Z-phase after power on" in the machine HPR of scale origin signal detection method.		
	232	HPR method invalid	HPR is started with the HPR method which is not supported by the connected device.		
	233	Driver HPR error	A driver alarm was detected during HPR for the stepping motor driver.	The HPR completes at the error occurrence position.	
	234	HPR mode timeout error	The data is not loaded from the stepping motor driver properly upon the HPR.		
	235	HPR operation timeout error			
	236	HPR finish timeout error			

	Related buffer memory address		Set range (Setting with sequence program)	Remedy
	QD77MS2 QD77MS4	QD77MS16		
	80+150n 81+150n		<Movement amount setting after proximity dog ON> 0 to 2147483647	• Calculate the movement distance using a speed limit, HPR speed, and deceleration time, and set the movement amount after proximity dog ON so that the distance becomes a deceleration distance or longer. • Lower the HPR speed. • Adjust the proximity dog position so that the movement amount after proximity dog ON becomes longer. (Refer to Section 8.2.4, 8.2.5)
	74+150n 75+150n		<HPR speed> 1 to 1000000000 [PLS/s] 1 to 2000000000 [×10^{-2}mm/min]	
	1500+100n	4300+100n	<Positioning start No.> 1 to 600, 7000 to 7004, 9001 to 9004	Execute the machine HPR (positioning start No. 9001). (Refer to Section 8.2)
	1500+100n	4300+100n	<Positioning start No.> 1 to 600, 7000 to 7004, 9001 to 9004	Start the machine HPR (positioning start No. 9001) again. (Refer to Section 8.2)
	—	—	—	Turn the motor more than one revolution using JOG or positioning operation.
	—	—	—	• Execute HPR again. • When the servo parameter "Function selection C-4 (PC17)" is changed to "1: Not need to pass servo motor Z-phase after power on", transfer the parameter from the Simple Motion module to the servo amplifier and turn the power supply of the servo amplifier OFF. Then, turn it ON and execute HPR again.
	—	—	—	• Execute HPR again. • Adjust the servo gain and in-position range, and execute HPR again.
	—	—	—	Turn the power supplies of the system or servo amplifier from OFF to ON after passing the zero point of the motor by the JOG operation, etc.
	30180+200n	28480+100n	—	Set "0: Need to pass servo motor Z-phase after power on" in the servo parameter "Function selection C-4 (PC17)".
	70+150n		<HPR method> 0, 4, 5, 6, 7, 8	Correct to the available HPR method.
	—	—	—	Check the contents of driver alarm, and then execute HPR again.
	—	—	—	Execute HPR again. If the same error is displayed again, the hardware of the Simple Motion module or the stepping motor driver is faulty. Please consult your sales representative.
	—	—	—	
	—	—	—	

n: Axis No.-1

<table>
<tr><th>Classification of errors</th><th>Error code</th><th>Error name</th><th>Error</th><th>Operation status at error occurrence</th><th></th></tr>
<tr><td rowspan="2">JOG operation or inching operation errors</td><td>300</td><td>Outside JOG speed range</td><td>At the time of JOG starting, the JOG speed comes out of a specified range.</td><td>The JOG operation is not carried out when the JOG speed is outside the setting range at the time of JOG start.</td><td></td></tr>
<tr><td>301</td><td>Inching movement amount error</td><td>The inching movement amount dose not satisfy the setting conditions. (The setting value is large.)
Setting condition:
"Inching movement amount × (A) ≤ JOG speed limit value"
Use the following values for (A). Unit [ms]
<table>
<tr><th></th><th colspan="2">Operation cycle</th></tr>
<tr><th></th><th>0.88</th><th>1.77</th></tr>
<tr><td>When unit is set to PLS</td><td>1125</td><td>562.5</td></tr>
<tr><td>When unit is set to degree and "[Pr.83] Speed control 10 x multiplier setting for degree axis" is valid</td><td>67.5</td><td>33.75</td></tr>
<tr><td>When unit setting is other than the above</td><td>675</td><td>337.5</td></tr>
</table></td><td>The inching operation is not carried out when the inching movement amount exceeds a JOG speed limit at the time of inching start.</td><td></td></tr>
<tr><td>Positioning operation errors</td><td>500</td><td>Illegal condition data No.</td><td>The condition data No. is outside the setting range when a block using the condition data is started by a special starting (conditional start, wait start, simultaneous start, FOR (condition)).
(1 ≤ Condition data No. ≤ 10)</td><td>The operation is terminated.</td><td></td></tr>
</table>

	Related buffer memory address		Set range (Setting with sequence program)	Remedy
	QD77MS2 QD77MS4	QD77MS16		
	1518+100n 1519+100n	4318+100n 4319+100n	<JOG speed> 1 to 1000000000 [PLS/s] 1 to 2000000000 [×10^{-2}mm/min or others]	Bring the JOG speed into the setting range. (Refer to Section 11.2)
	1517+100n	4317+100n	<Inching movement amount> 0 to 65535	Set a smaller inching movement amount so that the setting condition is satisfied. (Refer to Section 11.3)
	Refer to Section 5.4 "List of block start data"		<Condition data No.> 1 to 10	Review the condition data No. (Refer to Section 5.4 [Da.14])

n: Axis No.-1

Classification of errors	Error code	Error name	Error	Operation status at error occurrence	
Positioning operation errors	501	Error before simultaneous start QD77MS2 QD77MS4	<When blocks are started simultaneously> • The partner axis for simultaneous start is BUSY.	At start : The system does not operate. During operation: The system stops immediately.	
			<When multiple axes are started and controlled simultaneously> • The partner axis for simultaneous start is BUSY. • The "Simultaneous starting axis start data No." of the start axis is 0 or is outside the setting range. • The "Simultaneous starting axis start data No." of those axes other than the start axis is outside the setting range.		
		Error before simultaneous start QD77MS16	<When blocks are started simultaneously> • The partner axis for simultaneous start is BUSY.		
			<When multiple axes are started and controlled simultaneously> • The same axis number is set to multiple simultaneous start axes. • The own axis number is set to a simultaneous start axis. • The number of simultaneous start axes is outside the setting range of 2 to 4. • The partner axis for simultaneous start is BUSY. • The "Simultaneous starting axis start data No." of the start axis and the partner axis for simultaneous start is 0 or is outside the setting range.		
	502	Illegal data No.	• The positioning data No. tried to be executed is outside the ranges of 1 to 600, 7000 to 7004, and 9001 to 9004. • The designation of a JUMP destination is executed currently. • The designation of a JUMP destination is outside the ranges of 1 to 600.	The positioning data is not executed.	
	503	No command speed	• At the start of positioning, a current speed (–1) is set for the command speed of the positioning data to be initially executed. • The current speed is set by speed control. • The current speed is set for speed-position or position-speed switching control.	The operation does not start at positioning start.	

	Related buffer memory address		Set range (Setting with sequence program)		Remedy
	QD77MS2 QD77MS4	QD77MS16			
	Refer to Section 5.5 "List of condition data"		<Condition operators> Axis designation: 10H, 20H, 30H, 40H, 50H, 60H, 70H, 80H, 90H, A0H, B0H, C0H, D0H, E0H		Normalize the condition operators. (Refer to Section 5.5 [Da.16])
	1540+100n		Axis 1 start data No.	Simultaneous starting axis start data No. 1 to 600	Normalize the simultaneous starting axis start data No. (Refer to Section 10.5)
	1541+100n		Axis 2 start data No.		
	1542+100n		Axis 3 start data No.		
	1543+100n		Axis 4 start data No.		
		4339+100n	<Simultaneous starting axis> b12 to b15 : 2 to 4 b8 to b11 : 0h to Fh b4 to b7 : 0h to Fh b0 to b3 : 0h to Fh		Normalize the simultaneous start axis.
		4339+100n	<Simultaneous starting axis> b12 to b15 : 2 to 4 b8 to b11 : 0h to Fh b4 to b7 : 0h to Fh b0 to b3 : 0h to Fh		Normalize the simultaneous starting own axis start data No. and the simultaneous starting axis start data No. (1 to 3). (Refer to Section 10.5)
		4340+100n	<Simultaneous starting own axis start data No.> 1 to 600		
		4341+100n	Simultaneous starting axis start data No.1	<Simultaneous starting axis start data No. (1 to 3)> 1 to 600	
		4342+100n	Simultaneous starting axis start data No.2		
		4343+100n	Simultaneous starting axis start data No.3		
	1500+100n	4300+100n	<Positioning start No.> 1 to 600, 7000 to 7004, 9001 to 9004		Normalize the positioning start No., positioning start data (in block start), and positioning data (in JUMP instruction).
	Refer to Section 5.3 "List of positioning data"		<JUMP destination> 1 to 600		
			<Command speed> 1 to 1000000000 [PLS/s] 1 to 2000000000 [$\times 10^{-2}$mm/min or others]		Normalize the positioning data.

n: Axis No.-1

Classification of errors	Error code	Error name	Error	Operation status at error occurrence	
Positioning operation errors	504	Outside linear movement amount range	• When the parameter "interpolation speed designation method" performs a linear interpolation in setting a "composite speed", the axis movement amount for each positioning data exceeds 1073741824(2^{30}). • The positioning address is –360.00000 or less or 360.00000 or more using INC instruction, where the control unit is set to "degree" and software stroke limit upper limit is not equal to the software stroke limit lower limit.	At start : The system does not operate. During operation: The system stops immediately.	
	506	Large arc error deviation	When an arc is interpolated by the designation of the center point, a difference between a radius of start point-center point and a radius of end point-center point exceeds the parameter "Circular interpolation error allowable limit".	At start : The circular interpolation control by center point designation is not executed. During operation: The system stops immediately.	
	507	Software stroke limit+	• The positioning is executed at a position exceeding the upper limit of the software stroke limit. • The positioning address and the new position value exceed the upper limit of the software stroke limit. • In the circular interpolation with sub points designated, the sub point exceeds the upper limit of the software stroke limit. • During the speed control mode/the torque control mode/the continuous operation to torque control mode, the command position value exceeded the upper limit of the software stroke limit.	At operation start: The system does not operate. In the analysis of new current value: Current value is not changed. During operation: • The system stops immediately when the positioning address during position control (including position control in speed-position switching control or position-speed switching control) is switched to the data outside the software stroke limit range. • During speed control (including speed control in speed-position switching control or position-speed switching control), the system stops at the setting (normal deceleration stop only) of rapid stop selection (stop group 3) in the detailed parameter 2 when the command position value or feed machine value during manual control is outside the software stroke limit range. At speed control mode/torque control mode/ continuous operation to torque control mode: The system switches to the position control mode and stops immediately when the command position value is outside the software stroke limit range.	
	508	Software stroke limit–	• The positioning is executed at a position exceeding the lower limit of the software stroke limit. • The positioning address and the new position value exceed the lower limit of the software stroke limit. • In the circular interpolation with sub points designated, the sub point exceeds the lower limit of the software stroke limit. • During the speed control mode/the torque control mode/the continuous operation to torque control mode, the command position value exceeded the lower limit of the software stroke limit.		

	Related buffer memory address		Set range (Setting with sequence program)	Remedy
	QD77MS2 QD77MS4	QD77MS16		
	Refer to Section 5.3 "List of positioning data"		<Positioning address/movement amount> • ABS unit [mm] [inch] [PLS] –2147483648 to 2147483647 Unit [degree] 0 to 35999999 • INC (When software stroke limits are valid) Unit [mm], [inch] [PLS]: –2147483648 to 2147483647 Unit [degree]: –35999999 to 35999999 (When software stroke limits are invalid) –2147483648 to 2147483647 • Speed-position switching INC mode: 0 to 2147483647 ABS mode: 0 to 35999999 ([degree] only) • Position-speed switching 0 to 2147483647 <Arc address> –2147483648 to 2147483647	Review the positioning address.
				• Correct the center point address (arc address) • Correct the end address (positioning address)
	60+150n 61+150n		<Circular interpolation error allowable limit> 0 to 1000000	Correct the circular interpolation error allowable limit value.
	New current value		<New position value> <Software stroke upper and lower limits> • [mm] [inch] [PLS] –2147483648 to 2147483647 • [degree] 0 to 35999999	At operation start : • Set the command position value within the software stroke limit by the manual control operation. (Refer to Chapter 11) • Correct the positioning address. (At circular interpolation with sub points designated, also check the arc address.) New current value: Set the new position value within the software stroke limit. (Refer to Section 9.2.19) During operation : Correct the positioning address. (For the positioning and arc addresses, refer to [Da.6] and [Da.7] in Section 5.3) At speed control mode/torque control mode/continuous operation to torque control mode: Review the operation so that the command position value does not exceed the software stroke limit.
	1506+100n 1507+100n	4306+100n 4307+100n		
	Software stroke limit upper limit			
	18+150n 19+150n			
	Software stroke limit lower limit			
	20+150n 21+150n			

n: Axis No.-1

Classification of errors	Error code	Error name	Error	Operation status at error occurrence	
Positioning operation errors	514	Outside new current value range	The new current address is outside the ranges of 0 to 359.99999, where the control unit is set to "degree".	Current value is not changed.	
	515	New current value not possible	• The control method sets an operation pattern (continuous path control) using new current positioning data. • The operation pattern sets a "new current value" in the control method using the data following the "continuous path control" positioning data.		
	516	Continuous path control not possible	• The continuous path control is designated using a control method which is not allowed to use for continuous path control such as speed control, speed-position switching control, position-speed switching control, fixed-feed, and current value changing. • The previous data such as those on speed control, speed-position switching control, position-speed switching control, fixed-feed, and current value changing shows a continuous path control. • The continuous positioning control is designated for speed control or position-speed switching control.	The system does not operate at start.	
	518	Outside operation pattern range	The operation pattern set value is 2.	At start : The system does not operate. During operation: The system stops with the setting (deceleration stop/rapid stop) of the detailed parameter 2 rapid stop selection (stop group 3). (Note that the deceleration stop only occurs during the manual pulse generator operation.)	
	519	Interpolation while interpolation axis BUSY	Interpolation is started during the operation of the interpolation axis.		
	520	Unit group unmatched	The reference and interpolation axis units are different at the parameter "interpolation speed designation method" setting of "composite speed".		
	521	Illegal interpolation description command	In 2-axis interpolation, the axis to be interpolated is the self axis or an axis not present.		
	522	Command speed setting error	The command speed is outside the setting range. Linear interpolation, circular interpolation: Reference axis is outside the setting range. Speed control interpolation: Either of reference axis and interpolation axis is outside the speed range.		

	Related buffer memory address		Set range (Setting with sequence program)	Remedy
	QD77MS2 QD77MS4	QD77MS16		
	1506+100n 1507+100n	4306+100n 4307+100n	<New position value> [degree] 0 to 35999999	Bring the new position value into the setting range. (Refer to Section 9.2.19)
	Refer to Section 5.3 "List of positioning data"		<Control method> 01H to 1EH, 80H to 84H • 03H, 0CH, 17H, 1CH: 1 to 4 axis fixed-feed control • 04H, 05H, 13H, 14H, 18H, 19H, 1DH, 1EH: 1 to 4 axis speed control • 81H: current value changing • Speed-position switching control: 06H, 07H • Position-speed switching control: 08H, 09H <Operation pattern> 00, 01, 11 • 01: Continuous positioning control • 11: Continuous path control	• Do not designate a current value changing using the positioning data following the continuous path control. • Do not designate positioning data following continuous path control using a "current value changing". (Refer to Section 9.2.19)
				• Do not designate a speed control, fixed-feed, speed-position switching control, position-speed switching control, and current value changing using the positioning data following the continuous path control data. • Do not carry out the fixed-feed, speed control, speed-position switching control, position-speed switching control, and current value changing using the continuous path control operation pattern. • Do not carry out the speed control and position-speed switching control using the continuous path control operation pattern. (Refer to Chapter 9)
	Same as error codes 515 to 516			Correct the operation pattern. (Refer to Section 5.3 [Da.1])
				Correct the control method. (Refer to Section 5.3 [Da.2])
	0+150n		<Unit setting> 0, 1, 2, 3	Correct the positioning data or change the parameter "Unit setting" of the axis to be interpolated. (Refer to Section 9.1.6)
	Same as error codes 515 to 516			• Correct the control method. (Refer to Section 5.3 [Da.2]) • Correct the axis to be interpolated. (Refer to Section 5.3 [Da.5], [Da.20] to [Da.22])
	Command speed storage addresses of positioning data No. 1 to 600		<Command speed> 1 to 1000000000 [PLS/s] 1 to 2000000000 [×10^{-2}mm/min or others]	Correct the command speed. (Refer to Section 5.3 [Da.8])

n: Axis No.-1

Classification of errors	Error code	Error name	Error	Operation status at error occurrence	
Positioning operation errors	523	Interpolation mode error	• For starting, a composite speed is designated in the reference axis parameter "Interpolation speed designation method" using the speed interpolation control or 4-axis linear interpolation control. • For starting, a reference axis speed is designated in the reference axis parameter "Interpolation speed designation method" using the circular interpolation control.	At start : The system does not operate. During operation: The system stops with the setting (deceleration stop/rapid stop) of the detailed parameter 2 rapid stop selection (stop group 3). (Note that the deceleration stop only occurs during the manual pulse generator operation.)	
	524	Control method setting error	• The control method setting value is outside the setting range. • The number of control axes or the axis to be interpolated differs from the previous data when continuous positioning control or continuous path control is to be exercised for continuously. • The NOP instruction was set to the control method of positioning data No. 600.		
	525	Sub point setting error	Either of the following applies in the circular interpolation with sub points designated. • Start point = sub point • End point = sub point • Start point, end point, and sub point are in line with each other. • Sub point address and center point address are outside the range of –2147483648 to 2147483647.	At start : The system does not operate. During operation: The system stops immediately.	
	526	End point setting error	• Start point is equal to end point in the circular interpolation with sub points designated. • End point address is outside the range of –2147483648 to 2147483647 in the circular interpolation with auxiliary point designation and center point designation.		
	527	Center point setting error	Circular interpolation with center point designation applicable to one of the followings. • Start point = Center point • End point = Center point • Center point address is outside the range of –2147483648 to 2147483647.		

	Related buffer memory address		Set range (Setting with sequence program)	Remedy
	QD77MS2 QD77MS4	QD77MS16		
	29+150n		<Interpolation speed designation method> 0: Composite speed 1: Reference axis speed	Set the "Interpolation speed designation method" correctly. (Refer to Section 9.1.6)
	Same as error codes 515 to 516			Correct the control method, axis to be interpolated or parameter. (Refer to Section 9.1.6, 9.2.20)
	Refer to Section 5.3 "List of positioning data"		<Positioning address/movement amount> • Unit [mm] [PLS] [inch] –2147483648 to 2147483647 (Unit [degree]) cannot be set. <Arc address> –2147483648 to 2147483647	Correct the sub address (arc address). (Refer to Section 9.2.10)
				Correct the end address (positioning address). (Refer to Section 9.2.10)
	Same as in error codes 525 to 526.			Correct the center point address (arc address). (Refer to Section 9.2.11)

n: Axis No.-1

Classification of errors	Error code	Error name	Error	Operation status at error occurrence	
Positioning operation errors	530	Outside address range	• In the speed-position switching control and the position-speed switching control, the setting value of a positioning address is negative. • In ABS1, ABS2, ABS3 and ABS4, the setting value of a positioning address is outside the range of 0 to 359.99999 degrees.	At start : The system does not operate. During operation: The system stops immediately with the setting (deceleration stop/rapid stop) of the detailed parameter 2 rapid stop selection (stop group 3). (Note that the deceleration stop only occurs during the manual pulse generator operation.)	
	532	Simultaneous start not possible	Among the axes to be started simultaneously, there is an axis on which an error other than this error occurs.		
	533	Condition data error	• The condition setting values are not set or outside the setting range. • The condition operator setting values are not set or outside the setting range. • The condition operator is a bit operator, and the parameter 1 is 32 or more. • An unusable condition operator is set for the set condition. • The conditional operator has been [parameter 1 is greater than to parameter 2] with 05H (P1 ≤ ** ≤ P2). • The setting value of "address" is outside the setting range when the condition target is set to "Buffer memory (1-word/2-word)". (1-word: 0 to 32767, 2-word: 0 to 32766) • The setting value of "simultaneous starting axis" is outside the setting range when the condition target is set to "positioning data No.". QD77MS16	The operation is terminated.	
	534	Special start instruction error	No applicable special start instruction is present.		
	535	Circular interpolation not possible	Circular interpolation is carried out on an axis in the unit of degree.		
	536	M code ON signal start	The positioning start is carried out when an M code ON signal is turned ON.	The system does not operate at start.	
	537	PLC READY OFF start	The positioning start is carried out when the PLC READY signal [Y0] is turned OFF.		
	538	READY OFF start	The positioning start is carried out when the READY signal [X0] is turned OFF.		
	543	Outside start No. range	• At the start of positioning, the setting value of the "positioning start No." of the axis control data is outside the ranges of 1 to 600, 7000 to 7004, and 9001 to 9004. • At a Pre-reading start, the "positioning start No." setting of the axis control data is other than 1 to 600.		

	Related buffer memory address		Set range (Setting with sequence program)	Remedy
	QD77MS2 QD77MS4	QD77MS16		
	Same as in error codes 504, 506.			Correct the positioning address. (Refer to Section 9.2.16, 9.2.17, or 9.2.18)
	Refer to Section 5.3 "List of positioning data" and Section 5.4 "List of block start data"		—	In the error history, check the axis where the error other than this error occurred, and remove the error factor. Correct the block start data and positioning data.
	Refer to Section 5.4 "List of block start data"		—	Normalize the block start data.
	Refer to Section 5.4 "List of block start data"		<Special start instruction> 00H to 06H	Correct the instruction code of the special start. (Refer to Section 5.4 [Da.13])
	Refer to Section 5.3 "List of positioning data"		—	Correct the control method. (Refer to Section 5.3 [Da.2])
	1504+100n	4304+100n	<M code OFF request> 1: M code ON signal is turned OFF	After turning OFF the M code ON signal, start the system. (Refer to Section 13.7.3)
	—	—	—	Check the program which turns ON/OFF the PLC READY signal [Y0], and turn ON the PLC READY signal. Then start the system.
	—	—	—	Check the READY ON signal, and then start the system. (Refer to Section 3.3.2)
	1500+100n	4300+100n	<Positioning start No.> 1 to 600, 7000 to 7004, 9001 to 9004	Normalize the positioning start No. (Refer to Section 13.7.7)

n: Axis No.-1

Classification of errors	Error code	Error name	Error	Operation status at error occurrence	
Positioning operation errors	544	Outside radius range	The arc radius exceeds 536870912.	At start : The system does not operate. During operation: The system stops immediately.	
	545	Control method LOOP setting error	A "0" is set in the repeating times of the control method "LOOP".	The operation is terminated.	
	546	Illegal setting of ABS direction in unit of degree	The setting value of ABS direction in the unit of degree is as follows. • Set outside the setting range. • A figure other than "0" is set when the software stroke limit is valid.	At start : The system does not operate. During operation: The system decelerates to a stop. (Note that, in the continuous positioning control and continuous path control, the system continues operating with the setting set at the time of start even if the setting is changed during the operation.)	
	547	Start at HPR incomplete	• When executing operation setting at HPR incomplete, positioning was started at HPR request ON. • When executing operation setting at HPR incomplete, control mode switching was executed at HPR request ON.	At start : The system does not operate. At control mode switching: The mode does not change.	
	550	Continuous operation to torque control not supported	Switching to the continuous operation to torque control mode is requested to a servo amplifier which does not support the continuous operation to torque control.	During positioning control: The system stops with the setting of the detailed parameter 2 rapid stop selection (stop group 3). During speed control mode: The mode is switched to position control mode, and the system stops immediately.	
	551	Outside control mode auto-shift switching parameter range	When setting the control mode auto-shift switching selection, the control mode auto-shift switching parameter is outside the range.		
I/F errors	800	Hold error	In the CPU module parameter "Output at error stop", the setting for the Simple Motion module is "Hold".	At start : The system does not operate. During operation: The system stops with the setting (deceleration stop/rapid stop) of the detailed parameter 2 rapid stop selection (stop group 3). (Note that the deceleration stop only occurs during the manual pulse generator operation.)	
	801	Flash ROM write error	Data is not written to the flash ROM.	At start: The system does not operate.	
	802	Flash ROM sum check error	While data is written to the flash ROM, the power is turned OFF.		

	Related buffer memory address		Set range (Setting with sequence program)	Remedy
	QD77MS2 QD77MS4	QD77MS16		
	Refer to Section 5.3 "List of positioning data"		<Maximum radius> 536870912	Correct the positioning data. (Refer to Section 9.2.10, or 9.2.11)
			<LOOP to LEND> 1 to 65535	Set 1 to 65535 in the repeating time of LOOP. (Refer to Section 9.2.22)
	ABS setting direction in the unit of degree		0: Shortcut 1: Clockwise 2: Counterclockwise	• Set the ABS setting direction in the unit of degree within the setting range. • Set "0" when the software stroke limits are valid. (Refer to Section 9.1.5)
	1550+100n	4350+100n		
	Software stroke limit upper limit		• [mm] [inch] [PLS] –2147483648 to 2147483647 • [degree] 0 to 35999999	Invalidate the software stroke limit. (To invalidate, set the software stroke limit upper limit value to the software stroke limit lower limit value.) (Refer to Section 9.1.5)
	18+150n 19+150n			
	Software stroke limit lower limit			
	20+150n 21+150n			
	Operation setting for incompletion of HPR		<Operation setting for incompletion of HPR> 0, 1	• Start after the HPR is executed. • Switch the control mode after the HPR is executed. • For systems which can operate the positioning control and speed-torque control though the HPR request is ON, set "1" to the setting value of the operation setting at HPR incomplete.
	87+150n			
	—	—	—	Use a servo amplifier which supports the continuous operation to torque control.
	1594+100n 1595+100n	4394+100n 4395+100n	< Outside control mode auto-shift switching parameter range > When "1" or "2" is set in "[Cd.153] Control mode auto-shift selection". • [mm] [inch] [PLS] –2147483648 to 2147483647 • [degree] 0 to 35999999	Set the control mode auto-shift switching parameter within the range and switch to the continuous operation to torque control mode.
	—	—	—	Clear the setting of the CPU module parameter "Output at error stop".
	—	—	—	The flash ROM is expected to be at the end of its writable life.
	1901	5901	<Parameter initialization request> 1: Parameter initialization is requested	Return the parameter to that set at the time of delivery from the plant. (Refer to Section 14.2)

n: Axis No.-1

Classification of errors	Error code	Error name	Error	Operation status at error occurrence	
I/F errors	803	PLC CPU error	The CPU module resulted in an error.	At start : The system does not operate. During operation: The system stops with the setting (deceleration stop/rapid stop) of the detailed parameter 2 rapid stop selection (stop group 2). (Note that the deceleration stop only occurs during the manual pulse generator operation.)	
	804	Dedicated instruction error	• The ZP.PSTRT_ instruction is executed with the start No. set to other than 1 to 600, 7000 to 7004 and 9001 to 9004. • The ZP.TEACH_ instruction is executed with the teaching data selection set to other than 0 and 1. • The ZP.TEACH_ instruction is executed with the positioning data No. set to other than 1 to 600. • The instruction of a non-existent axis is specified by the ZP.PSTRT_ or ZP.TEACH_ instruction.	The function for each instruction is not executed.	
	805	Flash ROM write number error	Data is written to the flash ROM continuously 25 times or more from the program.	At start: The system does not operate.	
	806	Dedicated instruction I/F error	Mismatching occurs between the CPU module and the Simple Motion module.		
	808	Error when switching from normal operation mode to amplifier-less operation mode	Input signals other than synchronization flag [X1] are ON when switching from the normal operation mode to the amplifier-less operation mode.	The operation mode is not changed.	
	809	Error when switching from amplifier-less operation mode to normal operation mode	Input signals other than synchronization flag [X1] are ON when switching from the amplifier-less operation mode to the normal operation mode.		
Parameter setting range errors	900	Outside unit setting range	The set value of the basic parameter 1 "Unit setting" is outside the setting range.	The READY signal [X0] is not turned ON.	
	901	Outside pulse number per rotation range	The set value of the basic parameter 1 "Number of pulses per rotation" is outside the setting range.		
	902	Outside movement amount per rotation range	The set value of the basic parameter 1 "Movement amount per rotation" is outside the setting range.		

	Related buffer memory address		Set range (Setting with sequence program)	Remedy
	QD77MS2 QD77MS4	QD77MS16		
	—	—	—	Check the error code in CPU module. (Refer to the "QCPU User's Manual (Hardware Design, Maintenance and Inspection)".)
	—	—	< ZP.PSTRT_ start No.> 1 to 600, 7000 to 7004, 9001 to 9004 < ZP.TEACH_ teaching data selection> 0: The command position value is written to the positioning address. 1: The command position value is written to the arc address. < ZP.TEACH_ positioning data No.> 1 to 600	• When executing the ZP.PSTRT_ instruction, set the start No. within the setting range. (Refer to Section 15.3) • When executing the ZP.TEACH_ instruction, set the teaching data selection and positioning data No. within the setting range. (Refer to Section 15.4) • Do not specify the instruction of a non-existent axis by the ZP.PSTRT_ and ZP.TEACH_ instructions. (Refer to Section 15.3 to Section 15. 4)
	—	—	—	Review the program so that data is not written continuously to the flash ROM. (Using "[Md.19]" in Section 5.6.1, the number of flash ROM write times can be monitored.) (If this error has occurred in a proper using method, writing is enabled by resetting the error, switching power OFF, then ON, or resetting the CPU module.)
	—	—	—	A trouble occurs. Repair.
	—	—	—	Switch the operation mode after confirming that all input signals other than synchronization flag [X1] are OFF.
	—	—	—	
	0+150n		0, 1, 2, 3	With the setting brought into the setting range, turn the PLC READY signal [Y0] from OFF to ON.
	2+150n 3+150n		1 to 200000000	
	4+150n 5+150n		1 to 200000000	

n: Axis No.-1

Classification of errors	Error code	Error name	Error	Operation status at error occurrence	
Parameter setting range errors	903	Outside unit magnification range	• The set value of the basic parameter 1 "Unit magnification" is outside the setting range. • "Movement amount per rotation (AL)" × "Unit magnification (AM)" exceeds 2147483648.	The READY signal [X0] is not turned ON.	
	906	Outside bias speed range	• The set value of the basic parameter 1 "Bias speed at start" is outside the setting range. • The bias speed exceeds the speed limit.	The READY signal [X0] is not turned ON.	
	907	Outside electronic gear setting range	The set value of the electronic gear is outside the setting range.		
	910	Outside speed limit value range	• The set value of the basic parameter 2 "Speed limit value" is outside the setting range. • The speed limit value is smaller than the HPR speed.	When the PLC READY signal [Y0] is turned from OFF to ON : READY signal [X0] is not turned ON. At start : The system does not operate.	
	911	Outside acceleration time 0 range	The set value of the basic parameter 2 "Acceleration time 0" is outside the setting range.		
	912	Outside deceleration time 0 range	The set value of the basic parameter 2 "Deceleration time 0" is outside the setting range.		
	920	Backlash compensation amount error	The calculation result of the following equation is smaller than 0 or larger than 4194304. $0 \leq \frac{\boxed{Pr.11} \times \boxed{Pr.2}}{\boxed{Pr.3} \times \boxed{Pr.4}} \leq 4194303$	The READY signal [X0] is not turned ON.	
	921	Software stroke limit upper limit	• In the unit of "degree", the set value of the detailed parameter 1 "Software stroke limit upper limit value" is outside the setting range. • In a unit other than "degree", the software stroke limit upper limit value is smaller than the software stroke limit lower limit value.		
	922	Software stroke limit lower limit	• In the unit of "degree", the set value of the detailed parameter 1 "Software stroke limit lower limit value" is outside the setting range. • In a unit other than "degree", the software stroke limit upper limit value is smaller than the software stroke limit lower limit value.		

	Related buffer memory address		Set range (Setting with sequence program)	Remedy
	QD77MS2 QD77MS4	QD77MS16		
	1+150n		1,10,100,1000	• Set AL and AM values which make "Movement amount per rotation (AL)" × "Unit magnification (AM)" within 2147483647, and then turn the PLC READY signal [Y0] from OFF to ON. • With the setting brought into the setting range, turn the PLC READY signal [Y0] from OFF to ON.
	6+150n 7+150n		0 [PLS/s] 0 [×10^{-2}mm/min or others]	• Set the bias speed to not more than the speed limit value. • With the setting brought into the setting range, turn the PLC READY signal [Y0] from OFF to ON.
	Unit magnification 1+150n Number of pulses per rotation 2+150n 3+150n Movement amount per rotation 4+150n 5+150n		0.001 ≤ Electronic gear ≤ 320000 Electronic gear = $\frac{[Pr.2]}{[Pr.3] \times [Pr.4]}$	"[Pr.2] Number of pulses per rotation (AP)", "[Pr.3] Movement amount per rotation (AL)", "[Pr.4] Unit magnification (AM)" Review these parameters. (Refer to Section 5.2.1)
	10+150n 11+150n		<Speed limit value> 1 to 1000000000 [PLS/s] 1 to 2000000000 [×10^{-2}mm/min or others]	• Set a value which is not less than the HPR speed. • With the setting brought into the setting range, turn the PLC READY signal [Y0] from OFF to ON.
	12+150n 13+150n		1 to 8388608	With the setting brought into the setting range, turn the PLC READY signal [Y0] from OFF to ON.
	14+150n 15+150n		1 to 8388608	
	17+150n		$0 \leq \frac{[Pr.11] \times [Pr.2]}{[Pr.3] \times [Pr.4]} \leq 4194303$	"[Pr.2] Number of pulses per rotation (AP)", "[Pr.3] Movement amount per rotation (AL)", "[Pr.4] Unit magnification (AM)" "[Pr.11] Backlash compensation amount" Review the items above. (Refer to Section 5.2.1 or Section 5.2.3)
	18+150n 19+150n		• [mm] [inch] [PLS] –2147483648 to 2147483647 • [degree] 0 to 35999999	• Bring the setting into the setting range. • In a unit other than "degree", set so that the lower limit value is smaller than the upper limit value.
	20+150n 21+150n		• [mm] [inch] [PLS] –2147483648 to 2147483647 • [degree] 0 to 35999999	

n: Axis No.-1

Classification of errors	Error code	Error name	Error	Operation status at error occurrence	
Parameter setting range errors	923	Software stroke limit selection	• The set value of the detailed parameter 1 "Software stroke limit selection" is outside the setting range. • In the unit of "degree", "1: Apply software stroke limit on feed machine value" is set.	The READY signal [X0] is not turned ON.	
	924	Software stroke limit valid/invalid setting	The set value of the detailed parameter 1 "Software stroke limit valid/invalid setting" is outside the setting range.		
	925	Command in-position width	The set value of the detailed parameter 1 "Command in-position width" is outside the setting range.		
	926	Illegal torque limit setting value	The set value of the detailed parameter 1 "Torque limit setting value" is outside the setting range.		
	927	M code ON timing error	The set value of the detailed parameter 1 "M code ON signal output timing" is outside the setting range.		
	928	Speed switching mode error	The set value of the detailed parameter 1 "Speed switching mode" is outside the setting range.		
	929	Interpolation speed designation method error	The set value of the detailed parameter 1 "Interpolation speed designation method" is outside the setting range.		
	930	Current value update request error	The set value of the detailed parameter 1 "Command position value during speed control" is outside the setting range.		
	932	Manual pulse generator input mode error	The set value of the detailed parameter 1 "Manual pulse generator/Incremental synchronous encoder input selection" is outside the setting range.		
	935	Speed-position function selection error	The detailed parameter 1 "Speed-position function selection" is preset to 2 and the following three conditions are not satisfied: 1) Unit is "degree". 2) Software stroke limits are invalid. 3) Update command position value.		
	936	External input signal selection error	The set value of the detailed parameter 1 "External input signal selection" is outside the setting range.		
	937	Forced stop valid/invalid setting error	The set value of the detailed parameter 1 "Forced stop valid/invalid setting" is outside the setting range.		
	938	Input signal logic selection setting error	The set values of the detailed parameter 1 "Input signal logic selection" are different in the axis that uses the same input signal.		

	Related buffer memory address		Set range (Setting with sequence program)	Remedy
	QD77MS2 QD77MS4	QD77MS16		
	22+150n		0, 1	• Bring the setting into the setting range. • In the unit of "degree", set "0: Apply software stroke limit on command position value".
	23+150n		0, 1	With the setting brought into the setting range, turn the PLC READY signal [Y0] from OFF to ON.
	24+150n 25+150n		1 to 2147483647	With the setting brought into the setting range, turn the PLC READY signal [Y0] from OFF to ON.
	26+150n		1 to 1000	
	27+150n		0, 1	
	28+150n		0, 1	
	29+150n		0, 1	
	30+150n		0, 1, 2	
	33		0, 1, 2, 3	
	34+150n		0, 2	• Speed-position switching control (ABS mode) should satisfy the conditions 1) to 3) given on the left. • When speed-position switching control (ABS mode) is not to be exercised, set 0 to speed-position function selection and turn the PLC READY signal [Y0] from OFF to ON.
	32+150n		0, 1, 2, 3, 4, 5, 6	With the setting brought into the setting range, turn the PLC READY signal [Y0] from OFF to ON.
	35		0, 1, 2	
	31+150n		0, 1	With the setting of the axis is matched, turn the PLC READY signal [Y0] from OFF to ON.

n: Axis No.-1

Classification of errors	Error code	Error name	Error	Operation status at error occurrence	
Parameter setting range errors	950	Acceleration time 1 setting error	The set value of the detailed parameter 2 "Acceleration time 1" is outside the setting range.	When the PLC READY signal [Y0] is turned from OFF to ON: The READY signal [X0] is not turned ON. At start : The system does not operate. During operation : The system stops with the setting (deceleration stop/rapid stop) of the detailed parameter 2 rapid stop selection (stop group 3). (Note that the deceleration stop only occurs during the manual pulse generator operation.)	
	951	Acceleration time 2 setting error	The set value of the detailed parameter 2 "Acceleration time 2" is outside the setting range.		
	952	Acceleration time 3 setting error	The set value of the detailed parameter 2 "Acceleration time 3" is outside the setting range.		
	953	Deceleration time 1 setting error	The set value of the detailed parameter 2 "Deceleration time 1" is outside the setting range.		
	954	Deceleration time 2 setting error	The set value of the detailed parameter 2 "Deceleration time 2" is outside the setting range.		
	955	Deceleration time 3 setting error	The set value of the detailed parameter 2 "Deceleration time 3" is outside the setting range.		
	956	JOG speed limit value error	• The set value of the detailed parameter 2 "JOG speed limit value" is outside the setting range. • The set value of the detailed parameter 2 "JOG speed limit value" exceeds the speed limit.	When the PLC READY signal [Y0] is turned from OFF to ON: The READY signal [X0] is not turned ON. At start : The system does not operate. During operation : The system stops with the setting (deceleration stop/rapid stop) of the detailed parameter 2 rapid stop selection (stop group 3). (Note that the deceleration stop only occurs during the manual pulse generator operation.)	

	Related buffer memory address		Set range (Setting with sequence program)	Remedy
	QD77MS2 QD77MS4	QD77MS16		
	36+150n 37+150n		1 to 8388608	With the setting brought into the setting range, turn the PLC READY signal [Y0] from OFF to ON.
	38+150n 39+150n		1 to 8388608	
	40+150n 41+150n		1 to 8388608	
	42+150n 43+150n		1 to 8388608	
	44+150n 45+150n		1 to 8388608	
	46+150n 47+150n		1 to 8388608	
	48+150n 49+150n		<JOG speed limit value> 1 to 1000000000 [PLS/s] 1 to 2000000000 [×10^{-2}mm/min or others]	• With the setting brought into the setting range, turn the PLC READY signal [Y0] from OFF to ON. • Bring the setting into the speed limit value or below.

n: Axis No.-1

Classification of errors	Error code	Error name	Error	Operation status at error occurrence	
Parameter setting range errors	957	JOG acceleration time selection setting error	The set value of the detailed parameter 2 "JOG operation acceleration time selection" is outside the setting range.	When the PLC READY signal [Y0] is turned from OFF to ON: The READY signal [X0] is not turned ON. At start : The system does not operate. During operation : The system stops with the setting (deceleration stop/rapid stop) of the detailed parameter 2 rapid stop selection (stop group 3). (Note that the deceleration stop only occurs during the manual pulse generator operation.)	
	958	JOG deceleration time selection setting error	The set value of the detailed parameter 2 "JOG operation deceleration time selection" is outside the setting range.		
	959	Acceleration/ deceleration process selection setting error	The set value of the detailed parameter 2 "Acceleration/deceleration process selection" is outside the setting range.		
	960	S-curve ratio setting error	The set value of the detailed parameter 2 "S-curve ratio" is outside the setting range.		
	961	Illegal rapid stop deceleration time	The set value of the detailed parameter 2 "Rapid stop deceleration time" is outside the setting range.		
	962	Stop group 1 rapid stop selection error	The set value of the detailed parameter 2 "Stop group 1 rapid stop selection" is outside the setting range.		
	963	Stop group 2 rapid stop selection error	The set value of the detailed parameter 2 "Stop group 2 rapid stop selection" is outside the setting range.		
	964	Stop group 3 rapid stop selection error	The set value of the detailed parameter 2 "Stop group 3 rapid stop selection" is outside the setting range.		
	966	Outside allowance circular interpolation error width	The set value of the detailed parameter 2 "Allowance circular interpolation error width" is outside the setting range.		
	967	External command function selection error	The set value of the detailed parameter 2 "External command function selection" is outside the setting range.		
	970	Restart allowable range error	The set value of the detailed parameter 2 "Restart allowable range when servo OFF to ON" is outside the setting range.	The READY signal [X0] is not turned ON.	
	971	Speed control 10 x multiplier setting for degree axis error	The set value of the detailed parameter 2 "Speed control 10 x multiplier setting for degree axis" is outside the setting range.		
	972	Number of master axis error	Number of axes set for the master axis in servo parameter "Driver communication setting (PD15)" exceed the setting range.		
	973	Master axis No. error	Servo parameters "Driver communication setting Master axis No. selection (1 to 4) for slave (PD20 to PD23)" are set the self axis.		
	974	Master axis setting error	Not setting the master axis in Servo parameters "Driver communication setting Master axis No. selection (1 to 4) for slave (PD20 to PD23) ".		
	975	Driver communication setting error	• Setting the driver communication to servo amplifier which does not support the driver communication. • The driver communication setting is different in the module and the servo amplifier.	The communication between servo amplifiers of target axis is not executed. (The servo amplifier's LED display remains "Ab".)	

	Related buffer memory address		Set range (Setting with sequence program)	Remedy
	QD77MS2 QD77MS4	QD77MS16		
	50+150n		0, 1, 2, 3	With the setting brought into the setting range, turn the PLC READY signal [Y0] from OFF to ON.
	51+150n		0, 1, 2, 3	
	52+150n		0, 1	
	53+150n		1 to 100	
	54+150n 55+150n		1 to 8388608	
	56+150n		0, 1	
	57+150n		0, 1	
	58+150n		0, 1	
	60+150n 61+150n		0 to 100000	
	62+150n		0, 1, 2, 3, 4	
	64+150n 65+150n		0 to 327680	
	63+150n		0, 1	
	30210+200n	Set with GX Works2	—	Set the number of master axis not more than the number can be set in servo parameter "PD15".
	30215+200n 30216+200n 30217+200n 30218+200n	Set with GX Works2	—	Review the master axis No. of servo parameters "PD20 to PD23".
	—	—	—	• Confirm the driver communication and the actually connected servo amplifier. • After setting 'The driver communication setting', write to a flash ROM and switch the power on again or reset the PLC. After that turning the power of servo amplifier on again, switch the power on again or reset the PLC.

n: Axis No.-1

Classification of errors	Error code	Error name	Error	Operation status at error occurrence	
Parameter setting range errors	976	Manual pulse generator/Incremental synchronous encoder input type selection error	The set value of the detailed parameter 2 "Manual pulse generator/Incremental synchronous encoder input type selection" is outside the setting range.	The READY signal [X0] is not turned ON.	
	977	Operation setting for speed-torque control mode error	The set value of the detailed parameter 2 "Operation setting for speed-torque control mode" is outside the setting range.		
	978	External command signal selection error	The set value of the detailed parameter 2 "External command signal selection" is outside the setting range.		
	979	Synchronous encoder via servo amplifier invalid error	• The servo amplifier axis set as synchronous encoder via servo amplifier is not supported with scale measurement mode. • In system construction, the unset up servo amplifier axis is set as the synchronous encoder via servo amplifier. • In system construction, the axis set to "Invalid" at the external synchronization encoder input is set as the synchronous encoder via servo amplifier. • The servo amplifier axis set as synchronous encoder via servo amplifier is connected to the linear scale.		
	980	HPR method error	The set value of the HPR basic parameter "HPR method" is outside the setting range.		
	981	HPR direction error	The set value of the HPR basic parameter "HPR direction" is outside the setting range.		
	982	HP address setting error	The set value of the HPR basic parameter "HP address" is outside the setting range.		
	983	HPR speed error	• The set value of the HPR basic parameter "HPR speed" is outside the setting range. • The set value of the HPR basic parameter "HPR speed" is smaller than the bias speed at start.		

	Related buffer memory address		Set range (Setting with sequence program)	Remedy
	QD77MS2 QD77MS4	QD77MS16		
	67		0, 1	With the setting brought into the setting range, turn the PLC READY signal [Y0] from OFF to ON.
	68+150n		<Torque initial value selection (b4 to b7)> 0, 1	
			<Speed initial value selection (b8 to b11)> 0, 1, 2	
			<Condition selection at mode switching (b12 to b15)> 0, 1	
		69+150n	0, 1, 2, 3, 4	
	30100+200n	28400+100n	32	With the setting brought into the setting range, switch the power on again or reset the PLC.
	70+150n		0, 4, 5, 6, 7, 8	With the setting brought into the setting range, turn the PLC READY signal [Y0] from OFF to ON.
	71+150n		0, 1	
	72+150n 73+150n		• [mm] [inch] [PLS] –2147483648 to 2147483647 • [degree] 0 to 35999999	
	74+150n 75+150n		<HPR speed> 1 to 1000000000 [PLS/s] 1 to 2000000000 [×10^{-2}mm/min or others]	• Bring the setting into the setting range. • Set the speed to the bias speed at start or higher. (Refer to Section 5.2.5)

n: Axis No.-1

Classification of errors	Error code	Error name	Error	Operation status at error occurrence	
Parameter setting range errors	984	Creep speed error	• The set value of the HPR basic parameter "Creep speed" is outside the setting range. • The set value of the HPR basic parameter "Creep speed" is larger than the HPR speed. • The set value of the HPR basic parameter "Creep speed" is smaller than the bias speed at start.	The READY signal [X0] is not turned ON.	
	985	HPR retry error	The set value of the HPR basic parameter "HPR retry" is outside the setting range.		
	991	Setting for the movement amount after proximity dog ON error	The set value of the HPR detailed parameter "Setting for the movement amount after proximity dog ON" is outside the setting range.		
	992	HPR acceleration time selection error	The set value of the HPR detailed parameter "HPR acceleration time selection" is outside the setting range.		
	993	HPR deceleration time selection error	The set value of the HPR detailed parameter "HPR deceleration time selection" is outside the setting range.		
	995	HPR torque limit value error	• The set value of the HPR detailed parameter "HPR torque limit value" is outside the setting range. • The HPR detailed parameter "HPR torque limit value" has exceeded the detailed parameter 1 "Torque limit setting value".		
	997	Speed designation during HP shift error	The set value of the HPR detailed parameter "Speed designation during HP shift" is outside the setting range.		
	998	Operation setting for incompletion of HPR error	The set value of the HPR detailed parameter "Operation setting for incompletion of HPR" is outside the setting range.		
	999	Operation cycle setting error	The set value of the expansion parameter "Operation cycle setting" is outside the setting range.		
	1003	SSCNET setting error	The set values of the expansion parameter "SSCNET setting" and the servo parameter "Servo series" are mismatch.		
	1004	Servo amplifier electronic gear incorrect	When the resolution of the rotary servo motor is 67108864 pulse/rev using MR-J5(W)-B, the set values of the servo parameter "Electronic gear numerator (PA06)" and "Electronic gear denominator (PA07)" are mismatch.	The communication start process with the servo amplifier of the corresponding axis does not finish. (The servo amplifier's LED display remains "A_".)	

	Related buffer memory address		Set range (Setting with sequence program)	Remedy
	QD77MS2 QD77MS4	QD77MS16		
	76+150n 77+150n		<Creep speed> 1 to 1000000000 [PLS/s] 1 to 2000000000 [×10^{-2}mm/min or others]	• Bring the setting into the setting range. • Set the speed to that below the HPR speed. • Set the value to the bias speed at start or higher. (Refer to Section 5.2.5)
	78+150n		0, 1	With the setting brought into the setting range, turn the PLC READY signal [Y0] from OFF to ON.
	80+150n 81+150n		0 to 2147483647	With the setting brought into the setting range, turn the PLC READY signal [Y0] from OFF to ON.
	82+150n		0, 1, 2, 3	
	83+150n		0, 1, 2, 3	
	86+150n		1 to 1000	
	88+150n		0, 1	
	87+150n		0, 1	
	147	105	0, 1	With the setting brought into the setting range, write to the flash ROM and switch the power on again or reset the PLC.
	106		<SSCNET setting> 0, 1 <Servo series> 0, 1, 3, 4, 6, 7, 32, 64, 96, 97, 98, 99, 128, 4097, 4128, 4224	With "SSCNET setting" and "Servo series" set by a correct combination, write to the flash ROM and switch the power on again or reset the PLC.
	—		<Electronic gear numerator (PA06)> 16 <Electronic gear denominator (PA07)> 1	With "Electronic gear numerator (PA06)" and "Electronic gear denominator (PA07)" set by a correct combination, turn the PLC READY signal [Y0] from OFF to ON. After that reconnect the servo amplifier. <Electronic gear numerator (PA06)> 16 <Electronic gear denominator (PA07)> 1

n: Axis No.-1

Classification of errors	Error code	Error name	Error	Operation status at error occurrence	
Parameter setting range errors	1005	Driver communication master axis servo series setting incorrect	The servo series of the master axis corresponding to the slave axis is different.	The READY signal [X0] is not turned ON.	
Encoder errors	1201	HPR data incorrect	• The backup data for absolute position restoration is illegal. • The home position return has never been executed after the system start. • The home position return is started, but not completed correctly. • The servo alarm "Absolute position erased" (alarm No.: 25) or the servo warning "Absolute position counter warning" (warning No.: E3) occurred. • The servo parameter "Rotation direction selection/travel direction selection (PA14)" is changed.	The operation continues.	
Absolute position	1205	SSCNET communication error	Data received from servo amplifier is in error.	The operation continues.	
Servo amplifier	2000	Servo amplifier error	Alarm occurs in the servo amplifier.	The operation stops.	
	2999	Stepping driver fault	Hardware is faulty.	At start : The system does not operate. During operation : The system stops immediately.	

	Related buffer memory address		Set range (Setting with sequence program)	Remedy
	QD77MS2 QD77MS4	QD77MS16		
	—	—	—	• If the slave axis is MR-J4(W)-B, set MR-J4(W)-B for the master axis. • If the slave axis is MR-J5(W)-B, set MR-J5(W)-B for the master axis.
	—	—	—	Execute HPR.
	—	—	—	• Check the SSCNETⅢ cable. • Check the servomotor and encoder cable. • Take measures against noise. • Check whether the rotation direction selection/travel direction selection (PA14) is set "0 → 1" or "1 → 0" in the user program or the GX Works2. (Refer to Section 15.5) • Check whether "Absolute position detection system (PA03)" has been changed from invalid to valid after SSCNET communication establishment.
	888+100n	2488+100n	—	Confirm the alarm code by "[Md.114] Servo alarm", and refer to the MR Configurator2 help or the servo amplifier manual for details.
	—	—	—	Cycle the power. Contact your nearest Oriental Motor sales office.

n: Axis No.-1

16.4.2 Servo amplifier detection error

The detection error list for servo amplifier is shown below.
Refer to each servo amplifier instruction manual or manual for details.

(1) MR-J4(W)-B/MR-J3(W)-B/MR-J3-_BS_/MR-JE-B(F)

Classification of errors	Error code	Servo amplifier LED display
Servo amplifier errors	2010	10_
	2011	11_ (Note-1)
	2012	12_
	2013	13_
	2014	14_
	2015	15_
	2016	16_
	2017	17_
	2019	19_
	2020	20_
	2021	21_
	2024	24_
	2025	25_
	2027	27_
	2028	28_
	2030	30_
	2031	31_
	2032	32_
	2033	33_
	2034	34_
	2035	35_
	2036	36_
	2037	37_
	2042	42_
	2045	45_
	2046	46_
	2047	47_
	2050	50_
	2051	51_
	2052	52_
	2054	54_
	2056	56_
	2060	1A_
	2061	2A_
	2063	63_
		1E_
	2064	64_
		1F_
	2065	65_
	2066	66_
	2067	67_
	2068	68_

Classification of errors	Error code	Servo amplifier LED display
Servo amplifier errors	2070	70_
	2071	71_
	2072	72_ (Note-1)
	2079	79_
	2082	82_
	2088	88_
	2907	1B_
	2913	2B_
	2918	3A_ (Note-1)
	2921	3D_
	2922	3E_ (Note-1)
	2942	7A_
	2943	7B_
	2944	7C_
	2945	7D_
	2948	8A_
	2952	8E_

(Note-1): For MR-J4W_-_B or MR-J3W-_B.

(2) MR-J5(W)-B

When an error has occurred in the servo amplifier, an error code "2000" is stored in "[Md.23] Axis error No.", and an alarm code of the servo amplifier is stored in "[Md.114] Servo alarm".

Check the contents of "[Md.114] Servo alarm" for the error contents and remedy.

16.5 List of warnings

The following table shows the warning details and remedies to be taken when a warning occurs.

16.5.1 QD77MS detection warning

Classification of warnings	Warning code	Warning name	Warning	Operation status at warning occurrence	
—	000	(Normal status)	—	—	
Common warnings	100	Start during operation	• The start request is issued while the axis is BUSY. • Positioning was started during speed control mode/torque control mode.	Position control mode: The operation continues. Speed control mode/torque control mode: The operation continues. (Positioning start is not executed.)	
	104	Restart not possible	The restart command is issued when the axis operation status is not "Stopped".	Continue the operation.	
	109	Teaching in BUSY	The teaching request is issued while the axis is BUSY.	The warning is issued for the axis designated at the time of the teaching request.	
	110	Less than minimum speed	The overridden speed becomes “0”.	The system is controlled with the currently executing unit of 1.	
	111	In PLC READY	The request for writing to the flash ROM is issued when the PLC READY is turned ON.	The warning for axis 1 is issued.	
	112	Illegal override value	A value other than 1 to 300 is set for the override value.	• When a setting value is 0: Controlled at 100. • When a setting value is 301 or more: Controlled at 300.	
	113	Outside new torque value range/outside forward new torque value range	A new torque value/forward new torque value is exceeded the torque limit setting value. (Note): When the individual setting is used for new torque value and new reverse torque value, it indicates outside forward new torque value.	The torque change is not carried out.	
	114	Below bias speed	The command speed is below the bias speed at start.	Operate by the bias speed at start.	
	115	Outside new reverse torque value range	A new reverse torque value is exceeded the torque limit setting value.	The torque change is not carried out.	

	Related buffer memory address		Set range (Setting with sequence program)	Remedy
	QD77MS2 QD77MS4	QD77MS16		
	—	—	—	—
	—	—	—	• Normalize the start request ON timing. • When in speed control mode/torque control mode, start positioning after switching to the position control mode.
	1503+100n	4303+100n	<Restart command> 1: Restart	Normalize the start request ON timing. (Refer to Section 6.5.5) (Do not issue the restart command when the axis operation is not stopped.)
	1548+100n 1549+100n	4348+100n 4349+100n	<Teaching data selection> 0, 1 <Teaching positioning data No.> 1 to 600	Carry out the teaching request when the axis is not BUSY. (Refer to Section 13.7.4)
	1513+100n	4313+100n	<Positioning operation speed override> 1 to 300	Prevent the overridden speed from being reduced to 0. (Refer to Section 13.5.2)
	Same as warning code 109			Request to write when the PLC READY signal [Y0] is OFF.
	1513+100n	4313+100n	<Positioning operation speed override> 1 to 300	Set a value within the setting range.
	1525+100n	4325+100n	<New torque value/forward new torque value > 0 to [Torque limit setting value]	Set a new torque value or a forward new torque value less than the limit value.
	26+150n		<Torque limit setting value> 1 to 1000	
	Refer to Section 5.3 "List of positioning data" for command speed		<Command speed> 1 to 1000000000 [PLS/s] 1 to 2000000000 [×10^{-2}mm/min or another]	Re-set the command speed/bias speed at start so that the command speed is equal to or larger than the bias speed at start.
	Bias speed at start		<Bias speed at start> 0 [PLS/s] 0 [×10^{-2}mm/min or another]	
	6+150n 7+150n			
	1564+100n	4364+100n	<New reverse torque value> 0 to [Torque limit setting value]	Set a value which does not exceed the torque limit setting value as the new reverse torque value.
	26+150n		<Torque limit setting value> 1 to 1000	

n: Axis No.-1

Classification of warnings	Warning code	Warning name	Warning	Operation status at warning occurrence	
Common warnings	116	Optional data monitor data type setting error	In the optional data monitor, 2-word data is not set correctly.	Monitoring is not carried out. "0" is stored in [Md.109] to [Md.112] (Optional data monitor output 1 to 4).	
	120	Control mode switching during BUSY	Control mode switching was executed from the position control mode to the speed control mode/torque control mode while BUSY was turned ON.	The control mode is not switched. (Positioning during operation continues.)	
	121	Control mode switching during zero speed OFF	Control mode was changed when "Zero speed" ([Md.108] Servo status) was turned OFF.	The control mode is not switched. (Current operation continues.)	
	122	Outside control mode range	Control mode switching request was performed by specifying a value outside the range for "[Cd.139] Control mode setting".		
	123	Control mode switching	Control mode switching request was performed during the control mode switching.	Control mode switching request is not accepted.	
	124	Illegal control mode switching	• Switching to the speed-torque control mode is requested to the axis which does not support the control mode switching. • Switching to the continuous operation to torque control mode is requested to the axis which does not support the control mode switching.		
	125	Control mode switching not possible	• Control mode switching was performed from the position control mode to the continuous operation to torque control mode and then from the continuous operation to torque control mode to the speed control mode. • Control mode switching was performed from the speed control mode to the continuous operation to torque control mode and then from the continuous operation to torque control mode to the position control mode. • Control mode switching was performed between the torque control mode and continuous operation to torque control mode.	The control mode is not switched. (Current operation continues.)	

	Related buffer memory address		Set range (Setting with sequence program)	Remedy
	QD77MS2 QD77MS4	QD77MS16		
	Optional data monitor: Data type setting 1		—	Set the 2-word data to "[Pr.91] Optional data monitor: Data type setting 1" or "[Pr.93] Optional data monitor: Data type setting 3" and 0 to "[Pr.92] Optional data monitor: Data type setting 2" or "[Pr.94] Optional data monitor: Data type setting 4".
	100+150n			
	Optional data monitor: Data type setting 2			
	101+150n			
	Optional data monitor: Data type setting 3			
	102+150n			
	Optional data monitor: Data type setting 4			
	103+150n			
	—	—	—	Switch the control mode after turning BUSY OFF.
	—	—	—	Switch the control mode after turning "Zero speed" ([Md.108] Servo status) ON.
	1575+100n	4375+100n	<Control mode setting> 0, 10, 20, 30	Switch the control mode after setting a value within the range for "[Cd.139] Control mode setting".
	—	—	—	Carry out the control mode switching request after completing the control mode switching.
	—	—	—	• Do not use the speed-torque control to the axis which does not support the control mode switching. • Do not use the continuous operation to torque control to the axis which does not support the control mode switching.
	—	—	—	Review so that control mode switching is performed between the position control mode and continuous operation to torque control mode or between the speed control mode and continuous operation to torque control mode.

n: Axis No.-1

Classification of warnings	Warning code	Warning name	Warning	Operation status at warning occurrence	
Common warnings	126	VCII series parameter setting error	The servo parameter "Absolute position detection system (PA03)" is different from VCII series.	The operation is executed by the setting of VCII series.	
	130	Outside mark detection signal setting range	The mark detection signal setting is outside the range.	All mark detections are not operated.	
	131	Outside mark detection data type setting range	The mark detection data type setting is outside the range.		
	132	Outside mark detection data axis No. setting range	When the mark detection data type setting is not "Optional 2 word buffer memory", the mark detection data type setting is outside the range.	All mark detections are not operated.	
	133	Outside mark detection data buffer memory No. setting range	When the mark detection data type setting is "Optional 2 word buffer memory", the mark detection data buffer memory No. is outside the range or odd number.		
JOG operation warnings	300	Speed change during deceleration	The speed change request is issued during deceleration stop with JOG start signal OFF.	The speed change is not carried out.	
	301	JOG speed limit value	• The JOG speed (Note-1) is exceeded the speed limit value at start. • The new speed value (Note-1) exceeds the JOG speed limit value when the speed is changed during operation. (Note-1): This speed is a value in which override value is considered when override function is used. ("[Cd.13] Positioning operation speed override" is set other than 100[%].)	• When the speed exceeds the JOG speed limit, the JOG operation is carried out with the JOG speed limit value. • While the speed is limited by the JOG speed limit value, the "[Md.39] In speed limit flag" is turned ON.	
Manual pulse generator operation warnings	401	Outside manual pulse generator input magnification range	The manual pulse generator 1 pulse input magnification is set to 0, 10001 or more, or negative value.	• When input magnification is set at 10001 or more, or negative value: Re-set to 10000. • When input magnification is set at 0: Re-set to 1.	

	Related buffer memory address		Set range (Setting with sequence program)	Remedy
	QD77MS2 QD77MS4	QD77MS16		
	30103+200n	28403+100n	<Servo parameter "Absolute position detection system (PA03)"> 0, 1	Match the setting of the servo parameter "Absolute position detection system (PA03)" to the setting of VCII series, and turn the PLC READY signal [Y0] from OFF to ON.
	54000+20k		< Mark detection signal setting > 0 to 16	Set a value within the setting range.
	54002+20k		< Mark detection data type > -1 to 14	
	54003+20k		< Mark detection data axis No.> 1 to 16, 801 to 804, 201 to 208	Set a value within the setting range.
	54004+20k 54005+20k		<Mark detection data buffer memory No.> 0 to 65534	Set a value with an even number within the setting range.
	JOG speed		<JOG speed> 1 to 1000000000 [PLS/s] 1 to 2000000000 [×10^{-2}mm/min or another]	Do not carry out the JOG speed change during deceleration with the JOG start signal OFF.
	1518+100n 1519+100n	4318+100n 4319+100n		
	New speed value		<New speed value> 0 to 1000000000 [PLS/s] 0 to 2000000000 [×10^{-2}mm/min or another]	Set a value within the setting range.
	1514+100n 1515+100n	4314+100n 4315+100n		
	JOG speed limit value		<JOG speed limit value> 1 to 1000000000 [PLS/s] 1 to 2000000000 [×10^{-2}mm/min or another]	
	48+150n 49+150n			
	Positioning operation speed override		< Positioning operation speed override > 1 to 300 [%]	
	1513+100n	4313+100n		
	1522+100n 1523+100n	4322+100n 4323+100n	<Manual pulse generator 1 pulse input magnification> 1 to 1000	Set the manual pulse generator 1 pulse input magnification to within the setting range.

n: Axis No.-1

k: Mark detection setting No.-1

Classification of warnings	Warning code	Warning name	Warning	Operation status at warning occurrence	
Positioning operation warnings	500	Deceleration/stop speed change	The speed change request is issued during deceleration stop.	The speed change is not carried out.	
	501	Speed limit value over	• Setting speeds (Note-2) exceed the speed limit value when starting/restarting the positioning or when changing the speed at the positioning (Note-1). (At the interpolation control, either of reference axes or interpolation axes exceeds the speed limit value.) • "[Cd.140] Command speed at speed control mode" exceeds "[Pr.8] Speed limit value" during the speed control mode. • "[Cd.146] Speed limit value at torque control mode" exceeds "[Pr.8] Speed limit value" during the torque control mode. • "[Cd.147] Speed limit value at continuous operation to torque control mode" exceeds "[Pr.8] Speed limit value" during the continuous operation to torque control mode. (Note-1): The speed change by position-speed switching control, target position change function, or override function is contained. (Note-2): This speed is a value in which override value is considered when override function is used. ("[Cd.13] Positioning operation speed override" is set other than 100[%].)	[Position control mode] • The speed is controlled with the speed limit value. • The "[Md.39] In speed limit flag" is turned ON. [Speed control mode/Torque control mode/Continuous operation to torque control] • The speed is controlled with the speed limit value. (The "[Md.39] In speed limit flag" is not turned ON.)	
	503	M code ON signal ON	The M code ON signal is turned ON when the positioning data is executed.	Continue executing the positioning data.	
	505	No operation termination setting	In the positioning by block starting, the 50th point of the positioning start data is set to CONTINUE.	The operation is terminated.	

	Related buffer memory address		Set range (Setting with sequence program)	Remedy
	QD77MS2 QD77MS4	QD77MS16		
	1516+100n	4316+100n	<Speed change request> 1: Speed change is requested	Do not carry out the speed change during deceleration with a stop command, during stoppage, or during automatic deceleration with position control.
	HPR speed 74+150n 75+150n		<HPR speed> 1 to 1000000000 [PLS/s] 1 to 2000000000 [×10^{-2}mm/min or another]	Review each speed so that setting speeds do not exceed the speed limit value.
	Command speed Refer to Section 5.3 "List of positioning data"		<Command speed> 1 to 1000000000 [PLS/s] 1 to 2000000000 [×10^{-2}mm/min or another]	
	New speed value 1514+100n 1515+100n	 4314+100n 4315+100n	<New speed value> 0 to 1000000000 [PLS/s] 0 to 2000000000 [×10^{-2}mm/min or another]	
	Position-speed switching control speed change register 1530+100n 1531+100n	 4330+100n 4331+100n	<Position-speed switching control speed change register> 0 to 1000000000 [PLS/s] 0 to 2000000000 [×10^{-2}mm/min or another]	
	Target position change value (New speed) 1536+100n 1537+100n	 4336+100n 4337+100n	<Target position change value (New speed)> 0 to 1000000000 [PLS/s] 0 to 2000000000 [×10^{-2}mm/min or another]	
	Speed limit value 10+150n 11+150n		<JOG speed limit value> 1 to 1000000000 [PLS/s] 1 to 2000000000 [×10^{-2}mm/min or another]	
	Positioning operation speed override 1513+100n	 4313+100n	<Positioning operation speed override> 1 to 300[%]	
	Command speed at speed control mode 1576+100n 1577+100n	 4376+100n 4377+100n	<Command speed at speed control mode> -1000000000 to 1000000000 [PLS/s] -2000000000 to 2000000000 [×10^{-2}mm/min or another]	
	Speed limit value at torque control mode 1584+100n 1585+100n	 4384+100n 4385+100n	<Speed limit value at torque control mode> 0 to 1000000000 [PLS/s] 0 to 2000000000 [×10^{-2}mm/min or another]	
	Speed limit value at continuous operation to torque control mode 1586+100n 1587+100n	 4386+100n 4387+100n	< Speed limit value at continuous operation to torque control mode > -1000000000 to 1000000000 [PLS/s] -2000000000 to 2000000000 [×10^{-2}mm/min or another]	
	1504+100n	4304+100n	<M code OFF request> 1: M code ON signal is turned OFF	Normalize the ON and OFF timings of the "M code OFF request". (Refer to Section 13.7.3)
	Refer to Section 5.3 "List of positioning data"		<Operation pattern> 00: Positioning end 01: Continuous positioning control 11: Continuous path control	Set the operation termination to the 50th point. (Refer to Chapter 10)

n: Axis No.-1

Classification of warnings	Warning code	Warning name	Warning	Operation status at warning occurrence	
Positioning operation warnings	506	FOR to NEXT nest construction	FOR to NEXT is nested.	The operation is continued.	
	508	Speed-position switching (during acceleration) signal ON	The switching signal for speed-position switching control (INC mode) is turned ON during acceleration.		
	509	Insufficient remaining distance	• At a continuous operation interrupt request, the distance required deceleration stop is not long enough. • At a speed change request, the remaining distance is shorter than the distance required for speed change.	• When a command speed is changed: Change to a value as near a new speed value as possible. • When a target position is changed: Adjust the speed to a value as near the command speed as possible, and then change to a target position. (When the operation pattern is a continuous path control, ignore the operations stated above.)	
	511	Step not possible	Code 1 is set for the step start information when the step is outside standby.	The step will not start.	
	512	Illegal external command function	The detailed parameter 2 "External command function selection" setting range is exceeded.	Even if the external command signal is turned ON, the system will not perform anything.	
	513	Insufficient movement amount	The movement amount is not large enough for automatic deceleration.	The system stops immediately after it reaches the positioning address.	
	514	Outside command speed range	• The speed change value is outside the setting range when changing the speed during operation. (Note-1) • "[Cd.140] Command speed at speed control mode" is outside the setting range during the speed control mode. • "[Cd.146] Speed limit value at torque control mode" is outside the setting range during the torque control mode. (Note-1): The speed change by position-speed switching control or target position change function is contained.	• The speed change value is controlled as the "maximum value within the setting range". • The "[Md.39] In speed limit flag" is turned ON.	
	516	Illegal teaching data No.	The positioning data No. is set outside the setting range.	Teaching is not carried out when the set value is 0 or 601 or more. (The set value is automatically reset to "0" by the Simple Motion module even when a "0" or "601" or more is set.)	
	517	Illegal teaching data selection	The teaching data selection set value is outside the setting range.	Teaching is not carried out.	

	Related buffer memory address		Set range (Setting with sequence program)	Remedy
	QD77MS2 QD77MS4	QD77MS16		
	—	—	—	Make 1 nest construction for FOR to NEXT. (Refer to Section 10.3.8)
	—	—	—	Turn ON the speed-position switching signal in the speed stabilization region (constant speed status). (Refer to Section 9.2.16)
	—	—	—	Give a request at the position where there is an enough remaining distance.
	1546+100n	4346+100n	<Step start information> 1: Step is continued 2: Re-start is carried out	Do not set a "1" to the step start information when the step is not in standby state. (Refer to Section 13.7.1)
	62+150n		<External command function selection> 0, 1, 2, 3, 4	Set the detailed parameter 2 "External command function selection" to within the setting range.
	Refer to Section 5.3 "List of positioning data"		—	Set a decelerating address or a movement amount to the positioning data.
	New speed value		<New speed value> 0 to 1000000000 [PLS/s] 0 to 2000000000 [×10^{-2}mm/min or another]	• Set the speed change value to within the setting range. • Set "[Cd.140] Command speed at speed control mode" to within the setting range during the speed control mode. • Set "[Cd.146] Speed limit value at torque control mode" to within the setting range during the torque control mode.
	1514+100n 1515+100n	4314+100n 4315+100n		
	Position-speed switching control speed change register		<Position-speed switching control speed change register> 0 to 1000000000 [PLS/s] 0 to 2000000000 [×10^{-2}mm/min or another]	
	1530+100n 1531+100n	4330+100n 4331+100n		
	Target position change value (New speed)		<Target position change value (New speed)> 0 to 1000000000 [PLS/s] 0 to 2000000000 [×10^{-2}mm/min or another]	
	1536+100n 1537+100n	4336+100n 4337+100n		
	Command speed at speed control mode		<Command speed at speed control mode> -1000000000 to 1000000000 [PLS/s] -2000000000 to 2000000000 [×10^{-2}mm/min or another]	
	1576+100n 1577+100n	4376+100n 4377+100n		
	Speed limit value at torque control mode		<Speed limit value at torque control mode> 0 to 1000000000 [PLS/s] 0 to 2000000000 [×10^{-2}mm/min or another]	
	1584+100n 1585+100n	4384+100n 4385+100n		
	1549+100n	4349+100n	<Teaching positioning data No.> 1 to 600	Set the positioning data No. to within the setting range.
	1548+100n	4348+100n	<Teaching data selection> 0, 1	Set the teaching data selection set value to within the setting range.

n: Axis No.-1

Classification of warnings	Warning code	Warning name	Warning	Operation status at warning occurrence	
Positioning operation warnings	518	Target position change not possible	• A target position change request was given for the control method other than ABS1 and INC1. • A target position change request is turned ON during continuous path control. • A new target position address is outside the software stroke limit range. • A target position change request was given during deceleration to a stop. • A target position change request was issued when speed change 0 flag ([Md.31] Status: b10) was ON. • A target position change request was given during speed control mode, torque control mode or continuous operation to torque control mode.	The target position change is not carried out.	
	520	Torque limit value over	• A value exceeding "[Pr.17] Torque limit setting value" is set to "[Cd.143] Command torque at torque control mode" at torque control mode. • A value exceeding "[Pr.17] Torque limit setting value" is set to "[Cd.150] Target torque at continuous operation to torque control mode" at continuous operation to torque control mode.	The torque is controlled with the torque limit setting value.	
	521	Torque initial value selection invalid	• The servo parameter "Function selection C-B POL reflection selection at torque control (PC29)" is "0: Enabled" on the axis that set feedback torque into the torque initial value selection.	The initial value selection is controlled as the command torque.	
Servo amplifier	2100	Servo amplifier warning	Warning occurs in the servo amplifier.	The operation continues.	

	Related buffer memory address		Set range (Setting with sequence program)	Remedy
	QD77MS2 QD77MS4	QD77MS16		
	1538+100n	4338+100n	<Target position change request flag> 1: Target position change request	• Do not turn ON the target position change request in the following cases. 1) An operating pattern "continuous path control" is used. 2) A control method other than ABS1, and INC1 is used. 3) During deceleration stop. 4) When speed change 0 flag ([Md.31] Status: b10) is ON. 5) During speed control mode 6) During torque control mode 7) During continuous operation to torque control mode • When the target position change address is outside the software stroke limit range, correct the target position change address. (Refer to Section 13.5.5)
	Command torque at torque control mode		<Command torque at torque control mode> -10000 to 10000 [$\times 10^{-1}$%]	Review the setting value so that the setting torque is not exceeded the torque limit setting value.
	1580+100n	4380+100n		
	Target torque at continuous operation to torque control		< Target torque at continuous operation to torque control > -10000 to 10000 [$\times 10^{-1}$%]	
	1590+100n	4390+100n		
	Torque limit setting value		<Torque limit setting value> 1 to 1000[%]	
	26+150n			
	Operation setting for speed-torque control mode		<Torque initial value selection (b4 to b7)> 0, 1	• Use a servo amplifier which supports the servo parameter "Function selection C-B POL reflection selection at torque control (PC29)" and set (PC29) to "1: Disabled". • Set the torque initial value selection to command torque.
	68+150n			
	POL reflection setting at torque control		<POL reflection setting at torque control> 0, 1	
	30192+200n	28492+100n		
	888+100n	2488+100n	—	Confirm the warning code by "[Md.114] Servo alarm" and refer to the MR Configurator2 help or the servo amplifier instruction manual for details."

n: Axis No.-1

16.5.2 Servo amplifier detection warning

The detection warning list for Servo amplifier is shown below.
Refer to each servo amplifier instruction manual or manual for details.

(1) MR-J4(W)-B/MR-J3(W)-B/MR-J3-_BS_/MR-JE-B(F)

Classification of warnings	Warning code	Servo amplifier LED display
Servo amplifier warnings	2095	95_
	2101	91_
	2102	92_
	2106	96_
	2116	9F_
	2140	E0_
	2141	E1_
	2142	E2_
	2143	E3_
	2144	E4_
	2146	E6_
	2147	E7_
	2148	E8_
	2149	E9_
	2151	EB_ (Note-1)
	2152	EC_
	2153	ED_
	2160	F0_
	2162	F2_
	2163	F3_
	2955	9B_
	2956	9C_

(Note-1): For MR-J4W_-_B or MR-J3W-_B.

(2) MR-J5(W)-B

When a warning has occurred in the servo amplifier, an error code "2100" is stored in "[Md.24] Axis error No.", and a warning code of the servo amplifier is stored in "[Md.114] Servo alarm".
Check the contents of "[Md.114] Servo alarm" for the warning contents and remedy.

Appendices

Appendix 1 List of buffer memory addresses ..... Appendix- 2
Appendix 2 Connection with servo amplifiers ..... Appendix- 29
Appendix 2.1 SSCNETⅢ cables ..... Appendix- 30
Appendix 2.2 Serial absolute synchronous encoder cable ..... Appendix- 34
Appendix 2.3 SSCNETⅢ cable (SC-J3BUS_M-C) manufactured by Mitsubishi Electric System & Service ..... Appendix- 38
Appendix 3 Connection with external device ..... Appendix- 39
Appendix 3.1 Connector ..... Appendix- 39
Appendix 3.2 External input signal cable ..... Appendix- 41
Appendix 3.3 Manual pulse generator (MR-HDP01) ..... Appendix- 47
Appendix 4 Comparisons with positioning modules/LD77MH models ..... Appendix- 48
Appendix 4.1 Differences with QD75MH models ..... Appendix- 48
Appendix 4.2 Differences with LD77MH models ..... Appendix- 63
Appendix 5 When using GX Works2 ..... Appendix- 69
Appendix 6 Compatible devices with SSCNETⅢ(/H) ..... Appendix- 70
Appendix 6.1 Servo driver VCII series/VPH series manufactured by CKD NIKKI DENSO CO., LTD. ..... Appendix- 70
Appendix 6.2 Inverter FR-A700 series ..... Appendix- 77
Appendix 6.3 AlphaStep/5-phase stepping motor driver manufactured by ORIENTAL MOTOR Co., Ltd. ..... Appendix- 86
Appendix 6.4 IAI electric actuator controller manufactured by IAI Corporation ..... Appendix- 95
Appendix 6.5 Connection with MR-JE-B(F) ..... Appendix- 103
Appendix 6.6 Connection with MR-J5(W)-B ..... Appendix- 112
Appendix 7 External dimension drawing ..... Appendix- 120

Appendix 1 List of buffer memory addresses

The following shows the relation between the buffer memory addresses and the various items.

(Note-1): Do not use the buffer memory address that not been described here for a "Maker setting".

(Note-2): For the list of buffer memory addresses for positioning data, refer to the help in "Simple Motion Module Setting Tool" of GX Works2.

(Note-3): For the list of buffer memory addresses used in synchronous control, refer to the "MELSEC-Q/L QD77MS/QD77GF/LD77MS/LD77MH Simple Motion Module User's Manual (Synchronous Control)".

(Note-4): Guide to buffer memory address

- In the buffer memory address, "n" in "1+150n", etc. indicates a value corresponding to axis No.
  Calculate as follows for the buffer memory address corresponding to each axis.
  (Example) For axis No. 16
  1+150n ([Pr.4] Unit magnification (AM))=1+150×15=2251
- In the buffer memory address, "p" in "4012+5p", etc. indicates a pointer No.
  Calculate as follows for the buffer memory address corresponding to each pointer No.
  (Example) For pointer No. 15
  4012+5p ([Md.3] Start information)=4012+5×15=4087

Buffer memory address		Compatibility of setting value of QD77MS2/ QD77MS4 and QD77MS16	Item	Memory area	
QD77MS2 QD77MS4	QD77MS16				
0+150n		○	[Pr.1] Unit setting	Basic parameters 1	Positioning parameters
1+150n		○	[Pr.4] Unit magnification (AM)		
2+150n 3+150n		○	[Pr.2] Number of pulses per rotation (AP)		
4+150n 5+150n		○	[Pr.3] Movement amount per rotation (AL)		
6+150n 7+150n		○	[Pr.7] Bias speed at start		
10+150n 11+150n		○	[Pr.8] Speed limit value	Basic parameters 2	
12+150n 13+150n		○	[Pr.9] Acceleration time 0		
14+150n 15+150n		○	[Pr.10] Deceleration time 0		

n: Axis No.-1

○: Compatible △: Partly compatible ×: Not compatible

Buffer memory address		Compatibility of setting value of QD77MS2/ QD77MS4 and QD77MS16	Item	Memory area	
QD77MS2 QD77MS4	QD77MS16				
17+150n		○	[Pr.11] Backlash compensation amount	Detailed parameters 1	Positioning parameters
18+150n 19+150n		○	[Pr.12] Software stroke limit upper limit value		
20+150n 21+150n		○	[Pr.13] Software stroke limit lower limit value		
22+150n		○	[Pr.14] Software stroke limit selection		
23+150n		○	[Pr.15] Software stroke limit valid/invalid setting		
24+150n 25+150n		○	[Pr.16] Command in-position width		
26+150n		○	[Pr.17] Torque limit setting value		
27+150n		○	[Pr.18] M code ON signal output timing		
28+150n		○	[Pr.19] Speed switching mode		
29+150n		○	[Pr.20] Interpolation speed designation method		
30+150n		○	[Pr.21] Command position value during speed control		
31+150n		○	[Pr.22] Input signal logic selection		
32+150n		△	[Pr.80] External input signal selection		
33		○	[Pr.24] Manual pulse generator/Incremental synchronous encoder input selection		
34+150n		○	[Pr.81] Speed-position function selection		
35		○	[Pr.82] Forced stop valid/invalid selection		

n: Axis No.-1

○: Compatible △: Partly compatible ×: Not compatible

Buffer memory address		Compatibility of setting value of QD77MS2/ QD77MS4 and QD77MS16	Item	Memory area	
QD77MS2 QD77MS4	QD77MS16				
36+150n 37+150n		○	[Pr.25] Acceleration time 1	Detailed parameters 2	Positioning parameters
38+150n 39+150n		○	[Pr.26] Acceleration time 2		
40+150n 41+150n		○	[Pr.27] Acceleration time 3		
42+150n 43+150n		○	[Pr.28] Deceleration time 1		
44+150n 45+150n		○	[Pr.29] Deceleration time 2		
46+150n 47+150n		○	[Pr.30] Deceleration time 3		
48+150n 49+150n		○	[Pr.31] JOG speed limit value		
50+150n		○	[Pr.32] JOG operation acceleration time selection		
51+150n		○	[Pr.33] JOG operation deceleration time selection		
52+150n		○	[Pr.34] Acceleration/deceleration process selection		
53+150n		○	[Pr.35] S-curve ratio		
54+150n 55+150n		○	[Pr.36] Rapid stop deceleration time		
56+150n		○	[Pr.37] Stop group 1 rapid stop selection		
57+150n		○	[Pr.38] Stop group 2 rapid stop selection		
58+150n		○	[Pr.39] Stop group 3 rapid stop selection		
59+150n		○	[Pr.40] Positioning complete signal output time		
60+150n 61+150n		○	[Pr.41] Allowable circular interpolation error width		
62+150n		○	[Pr.42] External command function selection		
63+150n		○	[Pr.83] Speed control 10 x multiplier setting for degree axis		
64+150n 65+150n		○	[Pr.84] Restart allowable range when servo OFF to ON		
67		○	[Pr.89] Manual pulse generator/incremental synchronous encoder input type selection		
68+150n		○	[Pr.90] Operation setting for speed-torque control mode		
	69+150n	×	[Pr.95] External command signal selection		
70+150n		○	[Pr.43] HPR method	HPR basic parameters	HPR parameters
71+150n		○	[Pr.44] HPR direction		
72+150n 73+150n		○	[Pr.45] HP address		
74+150n 75+150n		○	[Pr.46] HPR speed		
76+150n 77+150n		○	[Pr.47] Creep speed		
78+150n		○	[Pr.48] HPR retry		

n: Axis No.-1

○: Compatible △: Partly compatible ×: Not compatible

Buffer memory address		Compatibility of setting value of QD77MS2/ QD77MS4 and QD77MS16	Item	Memory area	
QD77MS2 QD77MS4	QD77MS16				
80+150n 81+150n		○	[Pr.50] Setting for the movement amount after proximity dog ON	HPR detailed parameters	HPR parameters
82+150n		○	[Pr.51] HPR acceleration time selection		
83+150n		○	[Pr.52] HPR deceleration time selection		
84+150n 85+150n		○	[Pr.53] HP shift amount		
86+150n		○	[Pr.54] HPR torque limit value		
87+150n		○	[Pr.55] Operation setting for incompletion of HPR		
88+150n		○	[Pr.56] Speed designation during HP shift		
89+150n		○	[Pr.57] Dwell time during HPR retry		
100+150n		○	[Pr.91] Optional data monitor: Data type setting 1	Expansion parameter	
101+150n		○	[Pr.92] Optional data monitor: Data type setting 2		
102+150n		○	[Pr.93] Optional data monitor: Data type setting 3		
103+150n		○	[Pr.94] Optional data monitor: Data type setting 4		
147	105	○	[Pr.96] Operation cycle setting		
106		○	[Pr.97] SSCNET setting		
114		○	[Pr.114] External command signal compensation valid/invalid setting		
136+150n 137+150n		○	[Pr.135] Position command error check threshold		
138+150n 139+150n		○	[Pr.136] Deviation counter error check threshold		

n: Axis No.-1

○: Compatible △: Partly compatible ×: Not compatible

Buffer memory address		Compatibility of setting value of QD77MS2/ QD77MS4 and QD77MS16	Item		Memory area	
QD77MS2 QD77MS4	QD77MS16					
1200	4000	○	[Md.1] In test mode flag		System monitor data	Monitor data
1206 1207	4006 4007	○	[Md.130] OS version			
1208	4008	○	[Md.134] Operation time			
1209	4009	○	[Md.135] Maximum operation time			
1211	4011	○	[Md.131] Digital oscilloscope running flag			
1212+5p	4012+5p	○	[Md.3] Start information	Start history		
1213+5p	4013+5p	○	[Md.4] Start No.			
1440+p	4240+p	○	[Md.54] Start Year: month			
1214+5p	4014+5p	○	[Md.5] Start Day: hour			
1215+5p	4015+5p	○	[Md.6] Start Minute: second			
1216+5p	4016+5p	○	[Md.7] Error judgment			
1292	4092	○	[Md.8] Start history pointer			
1293+4p	4093+4p	○	[Md.9] Axis in which the error occurred	Error history		
1294+4p	4094+4p	○	[Md.10] Axis error No.			
31300+p		○	[Md.57] Servo alarm			
31333+p		○	[Md.61] Driver operation alarm number			
1456+p	4256+p	○	[Md.55] Axis error occurrence (Year: month)			
129 5+4p	4095+4p	○	[Md.11] Axis error occurrence (Day: hour)			
1296+4p	4096+4p	○	[Md.12] Axis error occurrence (Minute: second)			
1357	4157	○	[Md.13] Error history pointer			
1358+4p	4158+4p	○	[Md.14] Axis in which the warning occurred	Warning history		
1359+4p	4159+4p	○	[Md.15] Axis warning No.			
31316+p		○	[Md.58] Servo warning			
1472+p	4272+p	○	[Md.56] Axis warning occurrence (Year: month)			
1360+4p	4160+4p	○	[Md.16] Axis warning occurrence (Day: hour)			
1361+4p	4161+4p	○	[Md.17] Axis warning occurrence (Minute: second)			
1422	4222	○	[Md.18] Warning history pointer			
1424 1425	4224 4225	○	[Md.19] Number of write accesses to flash ROM			
1431	4231	○	[Md.50] Forced stop input			
1432	4232	○	[Md.51] Amplifier–less operation mode status			
1433	4233	○	[Md.53] SSCNET control status			
1434	4234	○	[Md.52] Communication between amplifiers axes searching flag			
1435	4235	○	[Md.59] Module information			
1438	4238	○	[Md.132] Operation cycle setting			
1439	4239	○	[Md.133] Operation cycle over flag			

p: Pointer No.-1

○: Compatible △: Partly compatible ×: Not compatible

Buffer memory address[*1]		Compatibility of setting value of QD77MS2/ QD77MS4 and QD77MS16	Item	Memory area	
QD77MS2 QD77MS4	QD77MS16				
800+100n 801+100n	2400+100n 2401+100n	○	[Md.20] Command position value	Axis monitor data	Monitor data
802+100n 803+100n	2402+100n 2403+100n	○	[Md.21] Feed machine value		
804+100n 805+100n	2404+100n 2405+100n	○	[Md.22] Speed command		
806+100n	2406+100n	○	[Md.23] Axis error No.		
807+100n	2407+100n	○	[Md.24] Axis warning No.		
808+100n	2408+100n	○	[Md.25] Valid M code		
809+100n	2409+100n	○	[Md.26] Axis operation status		
810+100n 811+100n	2410+100n 2411+100n	○	[Md.27] Current speed		
812+100n 813+100n	2412+100n 2413+100n	○	[Md.28] Axis speed command		
814+100n 815+100n	2414+100n 2415+100n	○	[Md.29] Speed-position switching control positioning movement amount		
816+100n	2416+100n	○	[Md.30] External input signal		
817+100n	2417+100n	△	[Md.31] Status		
818+100n 819+100n	2418+100n 2419+100n	○	[Md.32] Target value		
820+100n 821+100n	2420+100n 2421+100n	○	[Md.33] Target speed		
824+100n 825+100n	2424+100n 2425+100n	○	[Md.34] Movement amount after proximity dog ON		
826+100n	2426+100n	○	[Md.35] Torque limit stored value/forward torque limit stored value		
827+100n	2427+100n	○	[Md.36] Special start data instruction code setting value		
828+100n	2428+100n	○	[Md.37] Special start data instruction parameter setting value		
829+100n	2429+100n	○	[Md.38] Start positioning data No. setting value.		
830+100n	2430+100n	○	[Md.39] In speed limit flag		
831+100n	2431+100n	○	[Md.40] In speed change processing flag		
832+100n	2432+100n	○	[Md.41] Special start repetition counter		
833+100n	2433+100n	○	[Md.42] Control system repetition counter		
834+100n	2434+100n	○	[Md.43] Start data pointer being executed		
835+100n	2435+100n	○	[Md.44] Positioning data No. being executed		
836+100n	2436+100n	○	[Md.45] Block No. being executed		
837+100n	2437+100n	○	[Md.46] Last executed positioning data No.		

n: Axis No.-1

○: Compatible △: Partly compatible ×: Not compatible

Buffer memory address[*1]		Compatibility of setting value of QD77MS2/ QD77MS4 and QD77MS16	Item		Memory area	
QD77MS2 QD77MS4	QD77MS16					
838+100n	2438+100n	△	[Md.47] Positioning data being executed	Positioning identifier	Axis monitor data	Monitor data
839+100n	2439+100n	○		M code		
840+100n	2440+100n	○		Dwell time		
	2441+100n	×		Axis to be interpolated		
842+100n 843+100n	2442+100n 2443+100n	○		Command speed		
844+100n 845+100n	2444+100n 2445+100n	○		Positioning address		
846+100n 847+100n	2446+100n 2447+100n	○		Arc address		
848+100n 849+100n	2448+100n 2449+100n	○	[Md.100] HPR re-travel value			
850+100n 851+100n	2450+100n 2451+100n	○	[Md.101] Actual position value			
852+100n 853+100n	2452+100n 2453+100n	○	[Md.102] Deviation counter value			
854+100n 855+100n	2454+100n 2455+100n	○	[Md.103] Motor rotation speed			
856+100n	2456+100n	○	[Md.104] Motor current value			
858+100n	2458+100n	○	[Md.125] Servo status3			
859+100n	2459+100n	○	[Md.126] Servo status4			
860+100n	2460+100n	○	[Md.127] Servo status5			
864+100n 865+100n 866+100n 867+100n 868+100n 869+100n	2464+100n 2465+100n 2466+100n 2467+100n 2468+100n 2469+100n	○	[Md.106] Servo amplifier software No.			
870+100n	2470+100n	○	[Md.107] Parameter error No.			
876+100n	2476+100n	○	[Md.108] Servo status			
877+100n	2477+100n	○				
878+100n	2478+100n	○	[Md.109] Regenerative load ratio/Optional data monitor output 1			
879+100n	2479+100n	○	[Md.110] Effective load torque/Optional data monitor output 2			
880+100n	2480+100n	○	[Md.111] Peak torque ratio/Optional data monitor output 3			

n: Axis No.-1

○: Compatible △: Partly compatible ×: Not compatible

Buffer memory address*1		Compatibility of setting value of QD77MS2/ QD77MS4 and QD77MS16	Item	Memory area	
QD77MS2 QD77MS4	QD77MS16				
881+100n	2481+100n	○	[Md.112] Optional data monitor output 4	Axis monitor data	Monitor data
887+100n	2487+100n	○	[Md.113] Semi/Fully closed loop status		
888+100n	2488+100n	○	[Md.114] Servo alarm		
890+100n	2490+100n	○	[Md.116] Encoder option information		
891+100n	2491+100n	○	[Md.120] Reverse torque limit stored value		
892+100n 893+100n	2492+100n 2493+100n	○	[Md.122] Speed during command		
894+100n	2494+100n	○	[Md.123] Torque during command		
895+100n	2495+100n	○	[Md.124] Control mode switching status		
899+100n	2499+100n	○	[Md.48] Deceleration start flag		
59300+100n		○	[Md.500] Servo status7		
59302+100n		○	[Md.502] Driver operation alarm number		

n: Axis No.-1

○: Compatible △: Partly compatible ×: Not compatible

*1: The buffer memory addresses may differ from the ones for the command generation axis used for synchronous control. For the specifications of the command generation axis, refer to "MELSEC-Q/L QD77MS/QD77GF/LD77MS/LD77MH Simple Motion Module User's Manual (Synchronous Control)".

Buffer memory address[*1]		Compatibility of setting value of QD77MS2/ QD77MS4 and QD77MS16	Item	Memory area	
QD77MS2 QD77MS4	QD77MS16				
1500+100n	4300+100n	○	[Cd.3] Positioning start No.	Axis control data	Control data
1501+100n	4301+100n	○	[Cd.4] Positioning starting point No.		
1502+100n	4302+100n	○	[Cd.5] Axis error reset		
1503+100n	4303+100n	○	[Cd.6] Restart command		
1504+100n	4304+100n	○	[Cd.7] M code OFF request		
1505+100n	4305+100n	○	[Cd.8] External command valid		
1506+100n 1507+100n	4306+100n 4307+100n	○	[Cd.9] New position value		
1508+100n 1509+100n	4308+100n 4309+100n	○	[Cd.10] New acceleration time value		
1510+100n 1511+100n	4310+100n 4311+100n	○	[Cd.11] New deceleration time value		
1512+100n	4312+100n	○	[Cd.12] Acceleration/deceleration time change value during speed change, enable/disable		
1513+100n	4313+100n	○	[Cd.13] Positioning operation speed override		
1514+100n 1515+100n	4314+100n 4315+100n	○	[Cd.14] New speed value		
1516+100n	4316+100n	○	[Cd.15] Speed change request		
1517+100n	4317+100n	○	[Cd.16] Inching movement amount		
1518+100n 1519+100n	4318+100n 4319+100n	○	[Cd.17] JOG speed		
1520+100n	4320+100n	○	[Cd.18] Interrupt request during continuous operation		
1521+100n	4321+100n	○	[Cd.19] HPR request flag OFF request		
1522+100n 1523+100n	4322+100n 4323+100n	○	[Cd.20] Manual pulse generator 1 pulse input magnification		
1524+100n	4324+100n	○	[Cd.21] Manual pulse generator enable flag		
1525+100n	4325+100n	○	[Cd.22] New torque value/forward new torque value		
1526+100n 1527+100n	4326+100n 4327+100n	○	[Cd.23] Speed-position switching control movement amount change register		
1528+100n	4328+100n	○	[Cd.24] Speed-position switching enable flag		
1530+100n 1531+100n	4330+100n 4331+100n	○	[Cd.25] Position-speed switching control speed change register		
1532+100n	4332+100n	○	[Cd.26] Position-speed switching enable flag		
1534+100n 1535+100n	4334+100n 4335+100n	○	[Cd.27] Target position change value (New address)		
1536+100n 1537+100n	4336+100n 4337+100n	○	[Cd.28] Target position change value (New speed)		
1538+100n	4338+100n	○	[Cd.29] Target position change request flag		
	4339+100n	×	[Cd.43] Simultaneous starting axis		
1540+100n		×	[Cd.30] Simultaneous starting axis start data No. (axis 1 start data No.)		
	4340+100n		[Cd.30] Simultaneous starting own axis start data No.		

n: Axis No.-1

○: Compatible △: Partly compatible ×: Not compatible

Buffer memory address[*1]		Compatibility of setting value of QD77MS2/ QD77MS4 and QD77MS16	Item	Memory area	
QD77MS2 QD77MS4	QD77MS16				
1541+100n		×	[Cd.31] Simultaneous starting axis start data No. (axis 2 start data No.)	Axis control data	Control data
	4341+100n		[Cd.31] Simultaneous starting axis start data No.1		
1542+100n		×	[Cd.32] Simultaneous starting axis start data No. (axis 3 start data No.)		
	4342+100n		[Cd.32] Simultaneous starting axis start data No.2		
1543+100n		×	[Cd.33] Simultaneous starting axis start data No. (axis 4 start data No.)		
	4343+100n		[Cd.33] Simultaneous starting axis start data No.3		
1544+100n	4344+100n	○	[Cd.34] Step mode		
1545+100n	4345+100n	○	[Cd.35] Step valid flag		
1546+100n	4346+100n	○	[Cd.36] Step start information		
1547+100n	4347+100n	○	[Cd.37] Skip command		
1548+100n	4348+100n	○	[Cd.38] Teaching data selection		
1549+100n	4349+100n	○	[Cd.39] Teaching positioning data No.		
1550+100n	4350+100n	○	[Cd.40] ABS direction in degrees		
1551+100n	4351+100n	○	[Cd.100] Servo OFF command		
1552+100n	4352+100n	○	[Cd.101] Torque output setting value		
1554+100n	4354+100n	○	[Cd.130] Servo parameter read/write request		
1555+100n	4355+100n	○	[Cd.131] Parameter No. (Setting for servo parameters to be changed)		
1556+100n 1557+100n	4356+100n 4357+100n	○	[Cd.132] Change data		
1558+100n	4358+100n	○	[Cd.133] Semi/Fully closed loop switching request		
1559+100n	4359+100n	○	[Cd.108] Gain switching command flag		
1563+100n	4363+100n	○	[Cd.112] Torque change function switching request		
1564+100n	4364+100n	○	[Cd.113] New reverse torque value		
1565+100n	4365+100n	○	[Cd.136] PI-PID switching request		
1566+100n	4366+100n	○	[Cd.45] Speed-position switching device selection		
1567+100n	4367+100n	○	[Cd.46] Speed-position switching command		
1574+100n	4374+100n	○	[Cd.138] Control mode switching request		
1575+100n	4375+100n	○	[Cd.139] Control mode setting		
1576+100n 1577+100n	4376+100n 4377+100n	○	[Cd.140] Command speed at speed control mode		
1578+100n	4378+100n	○	[Cd.141] Acceleration time at speed control mode		
1579+100n	4379+100n	○	[Cd.142] Deceleration time at speed control mode		
1580+100n	4380+100n	○	[Cd.143] Command torque at torque control mode		

n: Axis No.-1

○: Compatible △: Partly compatible ×: Not compatible

Buffer memory address*1		Compatibility of setting value of QD77MS2/ QD77MS4 and QD77MS16	Item	Memory area	
QD77MS2 QD77MS4	QD77MS16				
1581+100n	4381+100n	○	[Cd.144] Torque time constant at torque control mode (Forward direction)	Axis control data	Control data
1582+100n	4382+100n	○	[Cd.145] Torque time constant at torque control mode (Negative direction)		
1584+100n 1585+100n	4384+100n 4385+100n	○	[Cd.146] Speed limit value at torque control mode		
1586+100n 1587+100n	4386+100n 4387+100n	○	[Cd.147] Speed limit value at continuous operation to torque control mode		
1588+100n	4388+100n	○	[Cd.148] Acceleration time at continuous operation to torque control mode		
1589+100n	4389+100n	○	[Cd.149] Deceleration time at continuous operation to torque control mode		
1590+100n	4390+100n	○	[Cd.150] Target torque at continuous operation to torque control mode		
1591+100n	4391+100n	○	[Cd.151] Torque time constant at continuous operation to torque control mode (Forward direction)		
1592+100n	4392+100n	○	[Cd.152] Torque time constant at continuous operation to torque control mode (Negative direction)		
1593+100n	4393+100n	○	[Cd.153] Control mode auto-shift selection		
1594+100n 1595+100n	4394+100n 4395+100n	○	[Cd.154] Control mode auto-shift parameter		
	30100+10n	×	[Cd.180] Axis stop		
	30101+10n	×	[Cd.181] Forward run JOG start		
	30102+10n	×	[Cd.182] Reverse run JOG start		
	30103+10n	×	[Cd.183] Execution prohibition flag		
1900	5900	○	[Cd.1] Flash ROM write request	System control data	
1901	5901	○	[Cd.2] Parameter initialization request		
1905	5905	○	[Cd.41] Deceleration start flag valid		
1907	5907	○	[Cd.42] Stop command processing for deceleration stop selection		
1909	5909	○	[Cd.47] QD75MH initial value setting request		
1926	5926	○	[Cd.137] Amplifier-less operation mode switching request		
1928	5928 5929 5930 5931	△	[Cd.44] External input signal operation device (Axis 1 to 16)		
1932	5932	○	[Cd.102] SSCNET control command		
1945	5945	○	[Cd.158] Forced stop input		

n: Axis No.-1

○: Compatible △: Partly compatible ×: Not compatible

*1: The buffer memory addresses may differ from the ones for the command generation axis used for synchronous control. For the specifications of the command generation axis, refer to "MELSEC-Q/L QD77MS/QD77GF/LD77MS/LD77MH Simple Motion Module User's Manual (Synchronous Control).

Buffer memory address		Compatibility of setting value of QD77MS2/ QD77MS4 and QD77MS16	Item		Memory area		
QD77MS2 QD77MS4	QD77MS16						
2000+6000n	6000+1000n	○	[Da.1] Operation pattern	Positioning identifier	No.1	Positioning data	Positioning data
		○	[Da.2] Control method				
		○	[Da.3] Acceleration time No.				
		○	[Da.4] Deceleration time No.				
		×	[Da.5] Axis to be interpolated				
2001+6000n	6001+1000n	○	[Da.10] M code/condition data No. /Number of LOOP to LEND repetitions				
2002+6000n	6002+1000n	○	[Da.9] Dwell time/JUMP destination positioning data No.				
	6003+1000n	×	[Da.20] Axis to be interpolated No.1	Axis to be interpolated			
			[Da.21] Axis to be interpolated No.2				
			[Da.22] Axis to be interpolated No.3				
2004+6000n 2005+6000n	6004+1000n 6005+1000n	○	[Da.8] Command speed				
2006+6000n 2007+6000n	6006+1000n 6007+1000n	○	[Da.6] Positioning address/movement amount				
2008+6000n 2009+6000n	6008+1000n 6009+1000n	○	[Da.7] Arc address				
2010+6000n to 2019+6000n	6010+1000n to 6019+1000n	△	No.2				
2020+6000n to 2029+6000n	6020+1000n to 6029+1000n	△	No.3				
to	to	to	to				
2990+6000n to 2999+6000n	6990+1000n to 6999+1000n	△	No.100				
3000+6000n to 3009+6000n	Set with GX Works2	△	No.101				
to		to	to				
7990+6000n to 7999+6000n		△	No.600				

n: Axis No.-1

○: Compatible △: Partly compatible ×: Not compatible

<table>
<tr><th colspan="4">Buffer memory address</th><th rowspan="2">Compatibility of setting value of QD77MS2/ QD77MS4 and QD77MS16</th><th rowspan="2">Item</th><th colspan="4" rowspan="2">Memory area</th></tr>
<tr><th colspan="2">QD77MS2
QD77MS4</th><th colspan="2">QD77MS16</th></tr>
<tr><td>26000+
1000n</td><td></td><td>22000+
400n</td><td></td><td>○</td><td>[Da.11] Shape
[Da.12] Start data No.</td><td rowspan="2">1st point</td><td rowspan="8">Block start data</td><td rowspan="17">Starting block 0</td><td rowspan="19">Positioning data (Starting block data)</td></tr>
<tr><td></td><td>26050+
1000n</td><td></td><td>22050+
400n</td><td>○</td><td>[Da.13] Special start instruction
[Da.14] Parameter</td></tr>
<tr><td>26001+
1000n</td><td>26051+
1000n</td><td>22001+
400n</td><td>22051+
400n</td><td>○</td><td colspan="2">2nd point</td></tr>
<tr><td>26002+
1000n</td><td>26052+
1000n</td><td>22002+
400n</td><td>22052+
400n</td><td>○</td><td colspan="2">3rd point</td></tr>
<tr><td colspan="2">to</td><td colspan="2">to</td><td>to</td><td colspan="2">to</td></tr>
<tr><td>26049+
1000n</td><td>26099+
1000n</td><td>22049+
400n</td><td>22099+
400n</td><td>○</td><td colspan="2">50th point</td></tr>
<tr><td colspan="2" rowspan="2">26100+1000n</td><td colspan="2" rowspan="2">22100+400n</td><td>○</td><td>[Da.15] Condition target</td><td rowspan="10">No.1</td><td rowspan="11">Condition data</td></tr>
<tr><td>△</td><td>[Da.16] Condition operator</td></tr>
<tr><td colspan="2" rowspan="4"></td><td colspan="2" rowspan="4">22101+400n</td><td rowspan="4">×</td><td>[Da.23] Number of simultaneous starting axes</td></tr>
<tr><td>[Da.24] Simultaneous starting axis No.1</td></tr>
<tr><td>[Da.25] Simultaneous starting axis No.2</td></tr>
<tr><td>[Da.26] Simultaneous starting axis No.3</td></tr>
<tr><td colspan="2">26102+1000n
26103+1000n</td><td colspan="2">22102+400n
22103+400n</td><td>○</td><td>[Da.17] Address</td></tr>
<tr><td colspan="2">26104+1000n
26105+1000n</td><td colspan="2">22104+400n
22105+400n</td><td>△</td><td>[Da.18] Parameter 1</td></tr>
<tr><td colspan="2">26106+1000n
26107+1000n</td><td colspan="2">22106+400n
22107+400n</td><td>△</td><td>[Da.19] Parameter 2</td></tr>
<tr><td colspan="2">26110+1000n
to
26119+1000n</td><td colspan="2">22110+400n
to
22119+400n</td><td>△</td><td colspan="2">No.2</td></tr>
<tr><td colspan="2">26120+1000n
to
26129+1000n</td><td colspan="2">22120+400n
to
22129+400n</td><td>△</td><td colspan="2">No.3</td></tr>
<tr><td colspan="2">to</td><td colspan="2">to</td><td>to</td><td colspan="2">to</td></tr>
<tr><td colspan="2">26190+1000n
to
26199+1000n</td><td colspan="2">22190+400n
to
22199+400n</td><td>△</td><td colspan="2">No.10</td></tr>
<tr><td colspan="2">26200+1000n
to
26299+1000n</td><td colspan="2">22200+400n
to
22299+400n</td><td>○</td><td colspan="3">Block start data</td><td rowspan="2">Starting block 1</td></tr>
<tr><td colspan="2">26300+1000n
to
26399+1000n</td><td colspan="2">22300+400n
to
22399+400n</td><td>△</td><td colspan="3">Condition data</td></tr>
</table>

n: Axis No.-1

○: Compatible △: Partly compatible ×: Not compatible

Buffer memory address		Compatibility of setting value of QD77MS2/ QD77MS4 and QD77MS16	Item	Memory area	
QD77MS2 QD77MS4	QD77MS16				
26400+1000n to 26499+1000n	Set with GX Works2	○	Block start data	Starting block 2	Positioning data (Starting block data)
26500+1000n to 26599+1000n		△	Condition data		
26600+1000n to 26699+1000n		○	Block start data	Starting block 3	
26700+1000n to 26799+1000n		△	Condition data		
26800+1000n to 26899+1000n		○	Block start data	Starting block 4	
26900+1000n to 26999+1000n		△	Condition data		

n: Axis No.-1

○: Compatible △: Partly compatible ×: Not compatible

The following shows the relation between the buffer memory addresses of servo parameter and the various items.
Since the servo parameters of MR-J5(W)-B are not in the buffer memory, use GX Works2 or axis control data to set them. Refer to "Appendix 6.6 Connection with MR-J5(W)-B" for details.
(Note): The setting range is different depending on the servo amplifier model. Refer to the instruction manual or manual of each servo amplifier for details.

Buffer memory address		Compatibility of setting value of QD77MS2/ QD77MS4 and QD77MS16	Item	Servo amplifier parameter No.	Memory area
QD77MS2 QD77MS4	QD77MS16				
30100+200n	28400+100n	○	[Pr.100] Servo series	–	Servo parameters
30101+200n	28401+100n	○	–	PA01	
30102+200n	28402+100n	○	–	PA02	
30103+200n	28403+100n	○	–	PA03	
30104+200n	28404+100n	○	–	PA04	
30105+200n	28405+100n	○	–	PA05	
30106+200n	28406+100n	○	–	PA06	
30107+200n	28407+100n	○	–	PA07	
30108+200n	28408+100n	○	–	PA08	
30109+200n	28409+100n	○	–	PA09	
30110+200n	28410+100n	○	–	PA10	
30111+200n	28411+100n	○	–	PA11	
30112+200n	28412+100n	○	–	PA12	
30113+200n	28413+100n	○	–	PA13	
30114+200n	28414+100n	○	–	PA14	
30115+200n	28415+100n	○	–	PA15	
30116+200n	28416+100n	○	–	PA16	
30117+200n	28417+100n	○	–	PA17	
30118+200n	28418+100n	○	–	PA18	
30932+50n	Set with GX Works2	○	–	PA19	
64400+250n	64400+70n	○	–	PA20	
64401+250n	64401+70n	○	–	PA21	
64402+250n	64402+70n	○	–	PA22	
64403+250n	64403+70n	○	–	PA23	
64404+250n	64404+70n	○	–	PA24	
64405+250n	64405+70n	○	–	PA25	
64406+250n	64406+70n	○	–	PA26	
64407+250n	64407+70n	○	–	PA27	
64408+250n	64408+70n	○	–	PA28	
64409+250n	64408+70n	○	–	PA29	
64410+250n	64410+70n	○	–	PA30	
64411+250n	64411+70n	○	–	PA31	
64412+250n	64412+70n	○	–	PA32	

n: Axis No.-1

○: Compatible △: Partly compatible ×: Not compatible

Buffer memory address		Compatibility of setting value of QD77MS2/ QD77MS4 and QD77MS16	Item	Servo amplifier parameter No.	Memory area
QD77MS2 QD77MS4	QD77MS16				
30119+200n	28419+100n	○	–	PB01	Servo parameters
30120+200n	28420+100n	○	–	PB02	
30121+200n	28421+100n	○	–	PB03	
30122+200n	28422+100n	○	–	PB04	
30123+200n	28423+100n	○	–	PB05	
30124+200n	28424+100n	○	–	PB06	
30125+200n	28425+100n	○	–	PB07	
30126+200n	28426+100n	○	–	PB08	
30127+200n	28427+100n	○	–	PB09	
30128+200n	28428+100n	○	–	PB10	
30129+200n	28429+100n	○	–	PB11	
30130+200n	28430+100n	○	–	PB12	
30131+200n	28431+100n	○	–	PB13	
30132+200n	28432+100n	○	–	PB14	
30133+200n	28433+100n	○	–	PB15	
30134+200n	28434+100n	○	–	PB16	
30135+200n	28435+100n	○	–	PB17	
30136+200n	28436+100n	○	–	PB18	
30137+200n	28437+100n	○	–	PB19	
30138+200n	28438+100n	○	–	PB20	
30139+200n	28439+100n	○	–	PB21	
30140+200n	28440+100n	○	–	PB22	
30141+200n	28441+100n	○	–	PB23	
30142+200n	28442+100n	○	–	PB24	
30143+200n	28443+100n	○	–	PB25	
30144+200n	28444+100n	○	–	PB26	
30145+200n	28445+100n	○	–	PB27	
30146+200n	28446+100n	○	–	PB28	
30147+200n	28447+100n	○	–	PB29	
30148+200n	28448+100n	○	–	PB30	
30149+200n	28449+100n	○	–	PB31	
30150+200n	28450+100n	○	–	PB32	
30151+200n	28451+100n	○	–	PB33	
30152+200n	28452+100n	○	–	PB34	
30153+200n	28453+100n	○	–	PB35	
30154+200n	28454+100n	○	–	PB36	
30155+200n	28455+100n	○	–	PB37	
30156+200n	28456+100n	○	–	PB38	
30157+200n	28457+100n	○	–	PB39	
30158+200n	28458+100n	○	–	PB40	

n: Axis No.-1

○: Compatible △: Partly compatible ×: Not compatible

Buffer memory address		Compatibility of setting value of QD77MS2/ QD77MS4 and QD77MS16	Item	Servo amplifier parameter No.	Memory area
QD77MS2 QD77MS4	QD77MS16				
30159+200n	28459+100n	○	–	PB41	Servo parameters
30160+200n	28460+100n	○	–	PB42	
30161+200n	28461+100n	○	–	PB43	
30162+200n	28462+100n	○	–	PB44	
30163+200n	28463+100n	○	–	PB45	
64413+250n	64413+70n	○	–	PB46	
64414+250n	64414+70n	○	–	PB47	
64415+250n	64415+70n	○	–	PB48	
64416+250n	64416+70n	○	–	PB49	
64417+250n	64417+70n	○	–	PB50	
64418+250n	64418+70n	○	–	PB51	
64419+250n	64419+70n	○	–	PB52	
64420+250n	64420+70n	○	–	PB53	
64421+250n	64421+70n	○	–	PB54	
64422+250n	64422+70n	○	–	PB55	
64423+250n	64423+70n	○	–	PB56	
64424+250n	64424+70n	○	–	PB57	
64425+250n	64425+70n	○	–	PB58	
64426+250n	64426+70n	○	–	PB59	
64427+250n	64427+70n	○	–	PB60	
64428+250n	64428+70n	○	–	PB61	
64429+250n	64429+70n	○	–	PB62	
64430+250n	64430+70n	○	–	PB63	
64431+250n	64431+70n	○	–	PB64	
30164+200n	28464+100n	○	–	PC01	
30165+200n	28465+100n	○	–	PC02	
30166+200n	28466+100n	○	–	PC03	
30167+200n	28467+100n	○	–	PC04	
30168+200n	28468+100n	○	–	PC05	
30169+200n	28469+100n	○	–	PC06	
30170+200n	28470+100n	○	–	PC07	
30171+200n	28471+100n	○	–	PC08	
30172+200n	28472+100n	○	–	PC09	
30173+200n	28473+100n	○	–	PC10	
30174+200n	28474+100n	○	–	PC11	
30175+200n	28475+100n	○	–	PC12	
30176+200n	28476+100n	○	–	PC13	
30177+200n	28477+100n	○	–	PC14	
30178+200n	28478+100n	○	–	PC15	

n: Axis No.-1

○: Compatible △: Partly compatible ×: Not compatible

Buffer memory address		Compatibility of setting value of QD77MS2/ QD77MS4 and QD77MS16	Item	Servo amplifier parameter No.	Memory area
QD77MS2 QD77MS4	QD77MS16				
30179+200n	28479+100n	○	–	PC16	Servo parameters
30180+200n	28480+100n	○	–	PC17	
30181+200n	28481+100n	○	–	PC18	
30182+200n	28482+100n	○	–	PC19	
30183+200n	28483+100n	○	–	PC20	
30184+200n	28484+100n	○	–	PC21	
30185+200n	28485+100n	○	–	PC22	
30186+200n	28486+100n	○	–	PC23	
30187+200n	28487+100n	○	–	PC24	
30188+200n	28488+100n	○	–	PC25	
30189+200n	28489+100n	○	–	PC 26	
30190+200n	28490+100n	○	–	PC 27	
30191+200n	28491+100n	○	–	PC28	
30192+200n	28492+100n	○	–	PC29	
30193+200n	28493+100n	○	–	PC30	
30194+200n	28494+100n	○	–	PC31	
30195+200n	28495+100n	○	–	PC32	
64432+250n	64432+70n	○	–	PC33	
64433+250n	64433+70n	○	–	PC34	
64434+250n	64434+70n	○	–	PC35	
64435+250n	64435+70n	○	–	PC36	
64436+250n	64436+70n	○	–	PC37	
64437+250n	64437+70n	○	–	PC38	
64438+250n	64438+70n	○	–	PC39	
64439+250n	64439+70n	○	–	PC40	
64440+250n	64440+70n	○	–	PC41	
64441+250n	64441+70n	○	–	PC42	
64442+250n	64442+70n	○	–	PC43	
64443+250n	64443+70n	○	–	PC44	
64444+250n	64444+70n	○	–	PC45	
64445+250n	64445+70n	○	–	PC46	
64446+250n	64446+70n	○	–	PC47	
64447+250n	64447+70n	○	–	PC48	
64448+250n	64448+70n	○	–	PC49	
64449+250n	64449+70n	○	–	PC50	
64450+250n	64450+70n	○	–	PC51	
64451+250n	64451+70n	○	–	PC52	
64452+250n	64452+70n	○	–	PC53	
64453+250n	64453+70n	○	–	PC54	

n: Axis No.-1

○: Compatible △: Partly compatible ×: Not compatible

Buffer memory address		Compatibility of setting value of QD77MS2/ QD77MS4 and QD77MS16	Item	Servo amplifier parameter No.	Memory area
QD77MS2 QD77MS4	QD77MS16				
64454+250n	64454+70n	○	–	PC55	Servo parameters
64455+250n	64455+70n	○	–	PC56	
64456+250n	64456+70n	○	–	PC57	
64457+250n	64457+70n	○	–	PC58	
64458+250n	64458+70n	○	–	PC59	
64459+250n	64459+70n	○	–	PC60	
64460+250n	64460+70n	○	–	PC61	
64461+250n	64461+70n	○	–	PC62	
64462+250n	64462+70n	○	–	PC63	
64463+250n	64463+70n	○	–	PC64	
30196+200n	Set with GX Works2	○	–	PD01	
30197+200n		○	–	PD02	
30198+200n		○	–	PD03	
30199+200n		○	–	PD04	
30200+200n		○	–	PD05	
30201+200n		○	–	PD06	
30202+200n		○	–	PD07	
30203+200n		○	–	PD08	
30204+200n		○	–	PD09	
30205+200n		○	–	PD10	
30206+200n		○	–	PD11	
30207+200n		○	–	PD12	
30208+200n		○	–	PD13	
30209+200n		○	–	PD14	
30210+200n		○	–	PD15	
30211+200n		○	–	PD16	
30212+200n		○	–	PD17	
30213+200n		○	–	PD18	
30214+200n		○	–	PD19	
30215+200n		○	–	PD20	
30216+200n		○	–	PD21	
30217+200n		○	–	PD22	
30218+200n		○	–	PD23	
30219+200n		○	–	PD24	
30220+200n		○	–	PD25	
30221+200n		○	–	PD26	
30222+200n		○	–	PD27	
30223+200n		○	–	PD28	
30224+200n		○	–	PD29	
30225+200n		○	–	PD30	

n: Axis No.-1

○: Compatible △: Partly compatible ×: Not compatible

Buffer memory address		Compatibility of setting value of QD77MS2/ QD77MS4 and QD77MS16	Item	Servo amplifier parameter No.	Memory area
QD77MS2 QD77MS4	QD77MS16				
30226+200n	Set with GX Works2	○	–	PD31	Servo parameters
30227+200n		○	–	PD32	
64464+250n		○	–	PD33	
64465+250n		○	–	PD34	
64466+250n		○	–	PD35	
64467+250n		○	–	PD36	
64468+250n		○	–	PD37	
64469+250n		○	–	PD38	
64470+250n		○	–	PD39	
64471+250n		○	–	PD40	
64472+250n		○	–	PD41	
64473+250n		○	–	PD42	
64474+250n		○	–	PD43	
64475+250n		○	–	PD44	
64476+250n		○	–	PD45	
64477+250n		○	–	PD46	
64478+250n		○	–	PD47	
64479+250n		○	–	PD48	
30228+200n		○	–	PE01	
30229+200n		○	–	PE02	
30230+200n		○	–	PE03	
30231+200n		○	–	PE04	
30232+200n		○	–	PE05	
30233+200n		○	–	PE06	
30234+200n		○	–	PE07	
30235+200n		○	–	PE08	
30236+200n		○	–	PE09	
30237+200n		○	–	PE10	
30238+200n		○	–	PE11	
30239+200n		○	–	PE12	
30240+200n		○	–	PE13	
30241+200n		○	–	PE14	
30242+200n		○	–	PE15	
30243+200n		○	–	PE16	
30244+200n		○	–	PE17	
30245+200n		○	–	PE18	
30246+200n		○	–	PE19	
30247+200n		○	–	PE20	
30248+200n		○	–	PE21	
30249+200n		○	–	PE22	

n: Axis No.-1

○: Compatible △: Partly compatible ×: Not compatible

Buffer memory address		Compatibility of setting value of QD77MS2/ QD77MS4 and QD77MS16	Item	Servo amplifier parameter No.	Memory area
QD77MS2 QD77MS4	QD77MS16				
30250+200n	Set with GX Works2	○	–	PE23	Servo parameters
30251+200n		○	–	PE24	
30252+200n		○	–	PE25	
30253+200n		○	–	PE26	
30254+200n		○	–	PE27	
30255+200n		○	–	PE28	
30256+200n		○	–	PE29	
30257+200n		○	–	PE30	
30258+200n		○	–	PE31	
30259+200n		○	–	PE32	
30260+200n		○	–	PE33	
30261+200n		○	–	PE34	
30262+200n		○	–	PE35	
30263+200n		○	–	PE36	
30264+200n		○	–	PE37	
30265+200n		○	–	PE38	
30266+200n		○	–	PE39	
30267+200n		○	–	PE40	
64480+250n		○	–	PE41	
64481+250n		○	–	PE42	
64482+250n		○	–	PE43	
64483+250n		○	–	PE44	
64484+250n		○	–	PE45	
64485+250n		○	–	PE46	
64486+250n		○	–	PE47	
64487+250n		○	–	PE48	
64488+250n		○	–	PE49	
64489+250n		○	–	PE50	
64490+250n		○	–	PE51	
64491+250n		○	–	PE52	
64492+250n		○	–	PE53	
64493+250n		○	–	PE54	
64494+250n		○	–	PE55	
64495+250n		○	–	PE56	
64496+250n		○	–	PE57	
64497+250n		○	–	PE58	
64498+250n		○	–	PE59	
64499+250n		○	–	PE60	
64500+250n		○	–	PE61	
64501+250n		○	–	PE62	
64502+250n		○	–	PE63	
64503+250n		○	–	PE64	

n: Axis No.-1

○: Compatible △: Partly compatible ×: Not compatible

Buffer memory address		Compatibility of setting value of QD77MS2/ QD77MS4 and QD77MS16	Item	Servo amplifier parameter No.	Memory area
QD77MS2 QD77MS4	QD77MS16				
30268+200n	Set with GX Works2	○	–	PS01	Servo parameters
30269+200n		○	–	PS02	
30270+200n		○	–	PS03	
30271+200n		○	–	PS04	
30272+200n		○	–	PS05	
30273+200n		○	–	PS06	
30274+200n		○	–	PS07	
30275+200n		○	–	PS08	
30276+200n		○	–	PS09	
30277+200n		○	–	PS10	
30278+200n		○	–	PS11	
30279+200n		○	–	PS12	
30280+200n		○	–	PS13	
30281+200n		○	–	PS14	
30282+200n		○	–	PS15	
30283+200n		○	–	PS16	
30284+200n		○	–	PS17	
30285+200n		○	–	PS18	
30286+200n		○	–	PS19	
30287+200n		○	–	PS20	
30288+200n		○	–	PS21	
30289+200n		○	–	PS22	
30290+200n		○	–	PS23	
30291+200n		○	–	PS24	
30292+200n		○	–	PS25	
30293+200n		○	–	PS26	
30294+200n		○	–	PS27	
30295+200n		○	–	PS28	
30296+200n		○	–	PS29	
30297+200n		○	–	PS30	
30298+200n		○	–	PS31	
30299+200n		○	–	PS32	

n: Axis No.-1

○: Compatible △: Partly compatible ×: Not compatible

Buffer memory address		Compatibility of setting value of QD77MS2/ QD77MS4 and QD77MS16	Item	Servo amplifier parameter No.	Memory area
QD77MS2 QD77MS4	QD77MS16				
30900+50n	Set with GX Works2	○	–	PF01	Servo parameters
30901+50n		○	–	PF02	
30902+50n		○	–	PF03	
30903+50n		○	–	PF04	
30904+50n		○	–	PF05	
30905+50n		○	–	PF06	
30906+50n		○	–	PF07	
30907+50n		○	–	PF08	
30908+50n		○	–	PF09	
30909+50n		○	–	PF10	
30910+50n		○	–	PF11	
30911+50n		○	–	PF12	
30912+50n		○	–	PF13	
30913+50n		○	–	PF14	
30914+50n		○	–	PF15	
30915+50n		○	–	PF16	
64504+250n		○	–	PF17	
64505+250n		○	–	PF18	
64506+250n		○	–	PF19	
64507+250n		○	–	PF20	
64508+250n		○	–	PF21	
64509+250n		○	–	PF22	
64510+250n		○	–	PF23	
64511+250n		○	–	PF24	
64512+250n		○	–	PF25	
64513+250n		○	–	PF26	
64514+250n		○	–	PF27	
64515+250n		○	–	PF28	
64516+250n		○	–	PF29	
64517+250n		○	–	PF30	
64518+250n		○	–	PF31	
64519+250n		○	–	PF32	
64520+250n		○	–	PF33	
64521+250n		○	–	PF34	
64522+250n		○	–	PF35	
64523+250n		○	–	PF36	
64524+250n		○	–	PF37	
64525+250n		○	–	PF38	
64526+250n		○	–	PF39	
64527+250n		○	–	PF40	

n: Axis No.-1

○: Compatible △: Partly compatible ×: Not compatible

Buffer memory address		Compatibility of setting value of QD77MS2/ QD77MS4 and QD77MS16	Item	Servo amplifier parameter No.	Memory area
QD77MS2 QD77MS4	QD77MS16				
64528+250n	Set with GX Works2	○	−	PF41	Servo parameters
64529+250n		○	−	PF42	
64530+250n		○	−	PF43	
64531+250n		○	−	PF44	
64532+250n		○	−	PF45	
64533+250n		○	−	PF46	
64534+250n		○	−	PF47	
64535+250n		○	−	PF48	
30916+50n		○	−	Po01	
30917+50n		○	−	Po02	
30918+50n		○	−	Po03	
30919+50n		○	−	Po04	
30920+50n		○	−	Po05	
30921+50n		○	−	Po06	
30922+50n		○	−	Po07	
30923+50n		○	−	Po08	
30924+50n		○	−	Po09	
30925+50n		○	−	Po10	
30926+50n		○	−	Po11	
30927+50n		○	−	Po12	
30928+50n		○	−	Po13	
30929+50n		○	−	Po14	
30930+50n		○	−	Po15	
30931+50n		○	−	Po16	
64536+250n		○	−	Po17	
64537+250n		○	−	Po18	
64538+250n		○	−	Po19	
64539+250n		○	−	Po20	
64540+250n		○	−	Po21	
64541+250n		○	−	Po22	
64542+250n		○	−	Po23	
64543+250n		○	−	Po24	
64544+250n		○	−	Po25	
64545+250n		○	−	Po26	
64546+250n		○	−	Po27	
64547+250n		○	−	Po28	
64548+250n		○	−	Po29	
64549+250n		○	−	Po30	
64550+250n		○	−	Po31	
64551+250n		○	−	Po32	

n: Axis No.-1

○: Compatible △: Partly compatible ×: Not compatible

Buffer memory address		Compatibility of setting value of QD77MS2/ QD77MS4 and QD77MS16	Item	Servo amplifier parameter No.	Memory area
QD77MS2 QD77MS4	QD77MS16				
64552+250n	Set with GX Works2	○	–	PL01	Servo parameters
64553+250n		○	–	PL02	
64554+250n		○	–	PL03	
64555+250n		○	–	PL04	
64556+250n		○	–	PL05	
64557+250n		○	–	PL06	
64558+250n		○	–	PL07	
64559+250n		○	–	PL08	
64560+250n		○	–	PL09	
64561+250n		○	–	PL10	
64562+250n		○	–	PL11	
64563+250n		○	–	PL12	
64564+250n		○	–	PL13	
64565+250n		○	–	PL14	
64566+250n		○	–	PL15	
64567+250n		○	–	PL16	
64568+250n		○	–	PL17	
64569+250n		○	–	PL18	
64570+250n		○	–	PL19	
64571+250n		○	–	PL20	
64572+250n		○	–	PL21	
64573+250n		○	–	PL22	
64574+250n		○	–	PL23	
64575+250n		○	–	PL24	
64576+250n		○	–	PL25	
64577+250n		○	–	PL26	
64578+250n		○	–	PL27	
64579+250n		○	–	PL28	
64580+250n		○	–	PL29	
64581+250n		○	–	PL30	
64582+250n		○	–	PL31	
64583+250n		○	–	PL32	
64584+250n		○	–	PL33	
64585+250n		○	–	PL34	
64586+250n		○	–	PL35	
64587+250n		○	–	PL36	
64588+250n		○	–	PL37	
64589+250n		○	–	PL38	
64590+250n		○	–	PL39	
64591+250n		○	–	PL40	

n: Axis No.-1

○: Compatible △: Partly compatible ×: Not compatible

Buffer memory address		Compatibility of setting value of QD77MS2/ QD77MS4 and QD77MS16	Item	Servo amplifier parameter No.	Memory area
QD77MS2 QD77MS4	QD77MS16				
64592+250n	Set with GX Works2	○	–	PL41	Servo parameters
64593+250n		○	–	PL42	
64594+250n		○	–	PL43	
64595+250n		○	–	PL44	
64596+250n		○	–	PL45	
64597+250n		○	–	PL46	
64598+250n		○	–	PL47	
64599+250n		○	–	PL48	

n: Axis No.-1

○: Compatible △: Partly compatible ×: Not compatible

The following shows the relation between the buffer memory addresses for mark detection function and the various items.

(Note): Do not use the buffer memory address that not been described here for a "Maker setting".

Buffer memory address		Compatibility of setting value of QD77MS2/ QD77MS4 and QD77MS16	Item		Memory area
QD77MS2 QD77MS4	QD77MS16				
54000+20k		○	[Pr.800] Mark detection signal setting		Mark detection setting parameters
54001+20k		○	[Pr.801] Mark detection signal compensation time		
54002+20k		○	[Pr.802] Mark detection data type		
54003+20k		○	[Pr.803] Mark detection data axis No.		
54004+20k 54005+20k		○	[Pr.804] Mark detection data buffer memory No.		
54006+20k 54007+20k		○	[Pr.805] Latch data range upper limit value		
54008+20k 54009+20k		○	[Pr.806] Latch data range lower limit value		
54010+20k		○	[Pr.807] Mark detection mode setting		
54640+10k		○	[Cd.800] Number of mark detection clear request		Mark detection control data
54641+10k		○	[Cd.801] Mark detection invalid flag		
54642+10k		○	[Cd.802] Latch data range change request		
54960+80k		○	[Md.800] Number of mark detection		Mark detection monitor data
54962+80k 54963+80k		○	[Md.801] Mark detection data storage area (1 to 32)	1	
54964+80k 54965+80k				2	
54966+80k 54967+80k				3	
to				to	
55024+80k 55025+80k				32	

k: Mark detection setting No.-1

○: Compatible △: Partly compatible ×: Not compatible

Appendix 2 Connection with servo amplifiers

SSCNETⅢ cables are used to connect between Simple Motion module and servo amplifier or between servo amplifiers.
Install the battery to servo amplifier to execute absolute position detection control.
Refer to the servo amplifier instruction manual or manual for details.

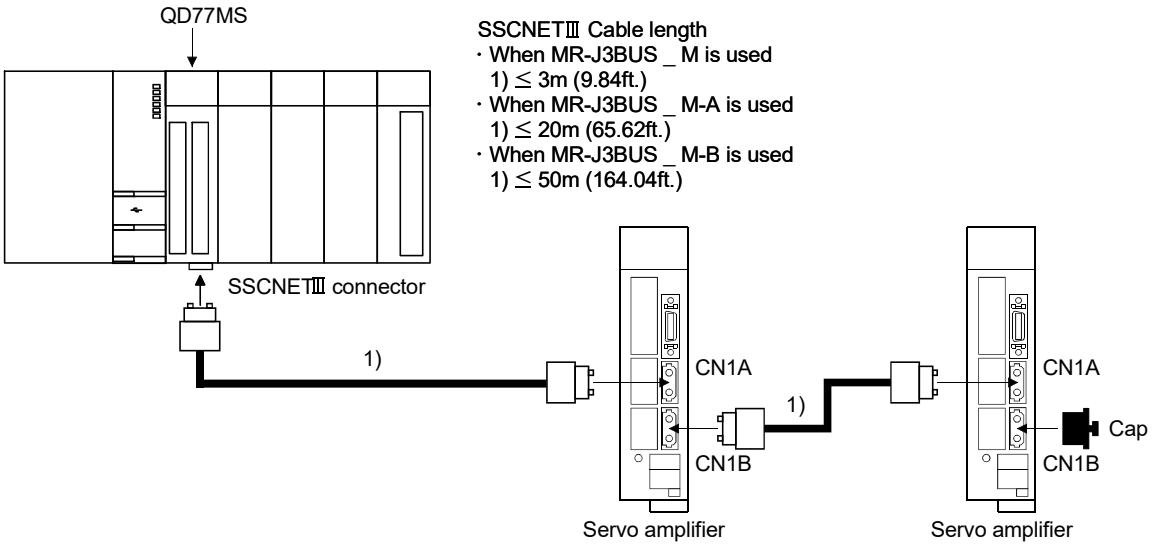

(Note): It cannot communicate with that the connection of CN1A and CN1B is mistaken.

⚠CAUTION

- Be sure to connect SSCNETⅢ cable with the above connector. If the connection is mistaken, between the Simple Motion module and servo amplifier cannot be communicated.
- SSCNETⅢ connector to connect the SSCNETⅢ cable is put a cap to protect light device inside connector from dust. For this reason, do not remove a cap until just before connecting SSCNETⅢ cable. Then, when removing SSCNETⅢ cable, make sure to put a cap.
- Keep the cap and the tube for protecting light cord end of SSCNETⅢ cable in a plastic bag with a zipper of SSCNETⅢ cable to prevent them from becoming dirty.
- Do not remove the SSCNETⅢ cable while turning on the power supply of Simple Motion module and servo amplifier. Do not see directly the light generated from SSCNETⅢ connector of Simple Motion module or servo amplifier and the end of SSCNETⅢ cable. When the light gets into eye, may feel something is wrong for eye. (The light source of SSCNETⅢ cable complies with class1 defined in JISC6802 or IEC60825-1.)
- When exchanging the Simple Motion module or servo amplifier, make sure to put a cap on SSCNETⅢ connector. When asking repair of Simple Motion module or servo amplifier for some troubles, make also sure to put a cap on SSCNETⅢ connector. When the connector is not put a cap, the light device may be damaged at the transit. In this case, exchange and repair of light device is required.

Appendix 2.1 SSCNETⅢ cables

Generally use the SSCNETⅢ cables available as our products.
Refer to Appendix 2.3 for long distance cables exceeding 50[m] (164.04 ft.) and ultra-long bending life cable.

(1) Model explanation

Numeral in the column of cable length on the table is a symbol put in the "_" part of cable model. Cables of which symbol exists are available.

Table 2.1 SSCNETⅢ cable list

Cable model	Cable length [m(ft.)]											Bending life	Application/ remark
	0.15 (0.49)	0.3 (0.98)	0.5 (1.64)	1 (3.28)	3 (9.84)	5 (16.40)	10 (32.81)	20 (65.62)	30 (98.43)	40 (131.23)	50 (164.04)		
MR-J3BUS_M	015	03	05	1	3							Standard	Standard cord for inside panel
MR-J3BUS_M-A						5	10	20				Standard	Standard cable for outside panel
MR-J3BUS_M-B (Note-1)									30	40	50	Long bending life	Long distance cable

(Note-1): For the cable of less than 30m (98.43ft.), contact your nearest Mitsubishi sales representative.

(2) Specification

Table 2.2 SSCNETⅢ cable list

		Description			
SSCNETⅢ cable model		MR-J3BUS_M		MR-J3BUS_M-A	MR-J3BUS_M-B
SSCNETⅢ cable length [m(ft.)]		0.15 (0.49)	0.3 to 3 (0.98 to 9.84)	5 to 20 (16.40 to 65.62)	30 to 50 (98.43 to 164.04)
Optical cable (Cord)	Minimum bend radius [mm(inch)]	25(0.98)		Enforced covering cord: 50 (1.97) Cord: 25 (0.98)	Enforced covering cord: 50 (1.97) Cord: 30(1.18)
	Tension strength [N]	70	140	420 (Enforced covering cord)	980 (Enforced covering cord)
	Temperature range for use [°C] (Note-1)	-40 to 80			-20 to 70
	Ambient	Indoors (no direct sunlight), No solvent or oil			
	External appearance [mm(inch)]	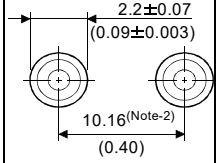	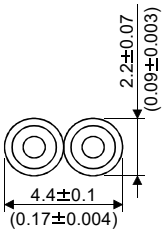	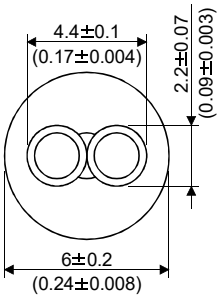	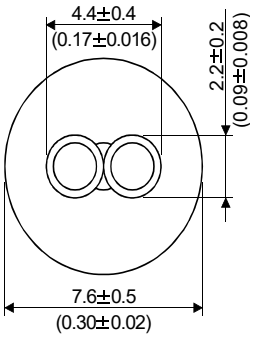

(Note-1): This temperature range for use is the value for optical cable (cord) only.
(Note-2): Dimension of connector fiber insert location. The distance of two cords is changed by how to bend it.

⚠CAUTION

- Please use the processing method and the processing treatment device that exists in the connector when you fix the cord part of the SSCNETⅢ cable to the connector.
- It must not cut squarely when you cut the cord part of the SSCNETⅢ cable, the cutting edge side must not be made smooth, and garbage etc. must not adhere.
- The damage etc. must not adhere to the optical cord part when you peel off the film of the cable of the SSCNETⅢ cable.
- If the end face of cord tip for the SSCNETⅢ cable is dirty, optical transmission is interrupted and it may cause malfunctions. If it becomes dirty, wipe with a bonded textile, etc. Do not use solvent such as alcohol.
- Do not add impossible power to the connector of the SSCNETⅢ cable.
- When incinerating the SSCNETⅢ cable (optical fiber), hydrogen fluoride gas or hydrogen chloride gas which is corrosive and harmful may be generated. For disposal of the SSCNETⅢ cable (optical fiber), request for specialized industrial waste disposal services who has incineration facility for disposing hydrogen fluoride gas or hydrogen chloride gas.

(a) MR-J3BUS_M

1) Model explanation

Type: MR-J3BUS _ M - ＊

Symbol	Cable type
None	Standard cord for inside panel
A	Standard cable for outside panel
B	Long distance cable

Symbol	Cable length [m(ft.)]
015	0.15(0.49)
03	0.3(0.98)
05	0.5(1.64)
1	1(3.28)
3	3(9.84)
5	5(16.40)
10	10(32.81)
20	20(65.62)
30	30(98.43)
40	40(131.23)
50	50(164.04)

2) Exterior dimensions

• MR-J3BUS015M

[Unit: mm(inch)]

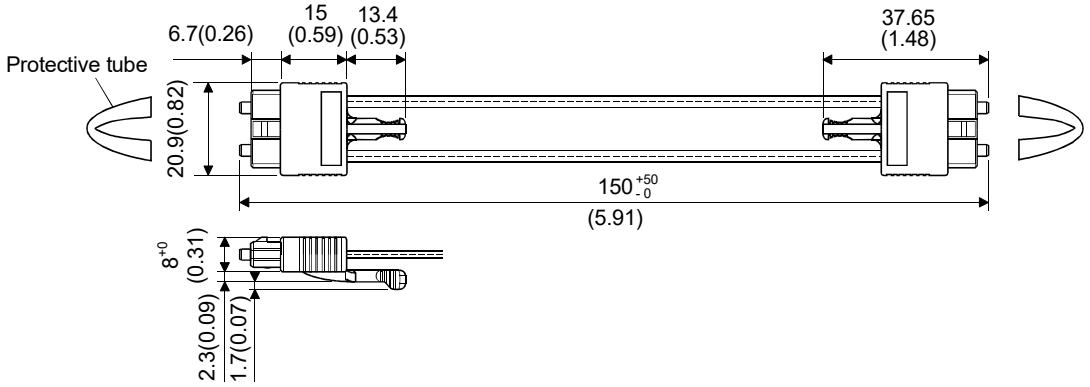

• MR-J3BUS03M to MR-J3BUS3M

Refer to the table of this section (1) for cable length (L).

[Unit: mm(inch)]

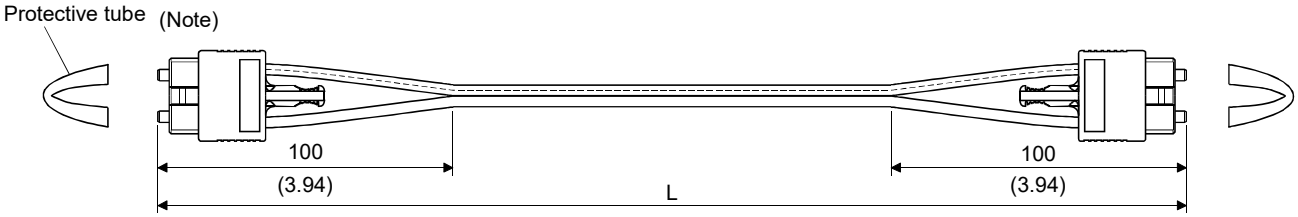

(Note): Dimension of connector part is the same as that of MR-J3BUS015M.

• MR-J3BUS5M-A to MR-J3BUS20M-A
• MR-J3BUS30M-B to MR-J3BUS50M-B
Refer to the table of this section (1) for cable length (L).

SSCNETⅢ Cable	Variation [mm(inch)]	
	A	B
MR-J3BUS5M-A to MR-J3BUS20M-A	100(3.94)	30(1.18)
MR-J3BUS30M-B to MR-J3BUS50M-B	150(5.91)	50(1.97)

[Unit: mm(inch)]

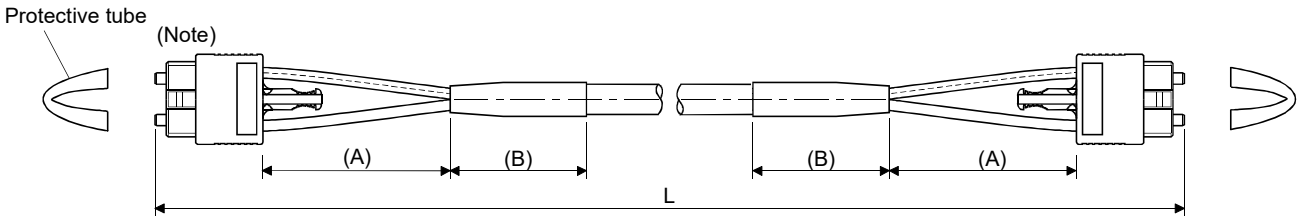

(Note): Dimension of connector part is the same as that of MR-J3BUS015M.

POINT
Keep the cap and the tube for protecting light cord end of SSCNETⅢ cable in a plastic bag with a zipper of SSCNETⅢ cable to prevent them from becoming dirty.

(b) SSCNETⅢ cable connector

[Unit: mm(inch)]

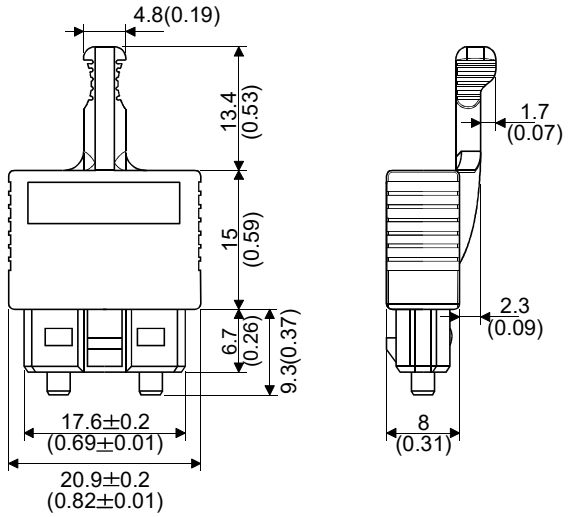

Appendix 2.2 Serial absolute synchronous encoder cable

Generally use the serial absolute synchronous encoder cables available as our products. If the required length is not found in our products, fabricate the cable on the customer side.

(1) Selection

The following table indicates the serial absolute synchronous encoder cables used with the serial absolute synchronous encoder.
Connector sets (MR-J3CN2) are also available for your fabrication.

Table 2.3 Cable models

Cable model	Cable length [m(ft.)]
Q170ENCCBL_M-A	2(6.56), 5(16.40), 10(32.81), 20(65.62), 30(98.43), 50(164.04)

Use the following or equivalent twisted pair cables as the serial absolute synchronous encoder cables.

Table 2.4 Connector sets

Connector sets type	Description
MR-J3CN2	Servo amplifier connector

Table 2.5 Wire specifications

Core size [mm^2]	Number of cores	Characteristics of one core			Finished OD [mm](Note-2)
		Structure [Number of wires/mm]	Conductor resistance [Ω/km]	Insulating sheath OD d[mm](Note-1)	
0.2	24(12 pair)	40/0.08	105 or less	0.88	9.0

(Note-1): d is as shown below.

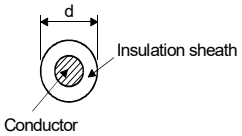

(Note-2): Standard OD (Outside Diameter). Maximum OD is about 10% larger.

⚠CAUTION

- When fabricating the encoder cable, do not make incorrect connection. Wrong connection will cause runaway or explosion.

(a) Q170ENCCBL_M-A

1) Model explanation

Type: Q170ENCCBL_M - A

Symbol	Cable length [m(ft.)]
2	2(6.56)
5	5(16.40)
10	10(32.81)
20	20(65.62)
30	30(98.43)
50	50(164.04)

2) Connection diagram

When fabricating a cable, use the recommended wire and connector set MR-J3CN2 for encoder cable given on this section (1), and make the cable as show in the following connection diagram. Maximum cable length is 50m(164.04ft.).

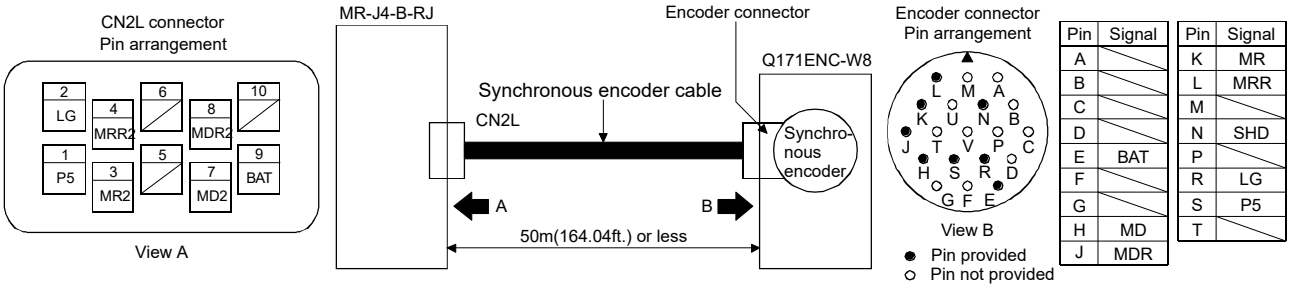

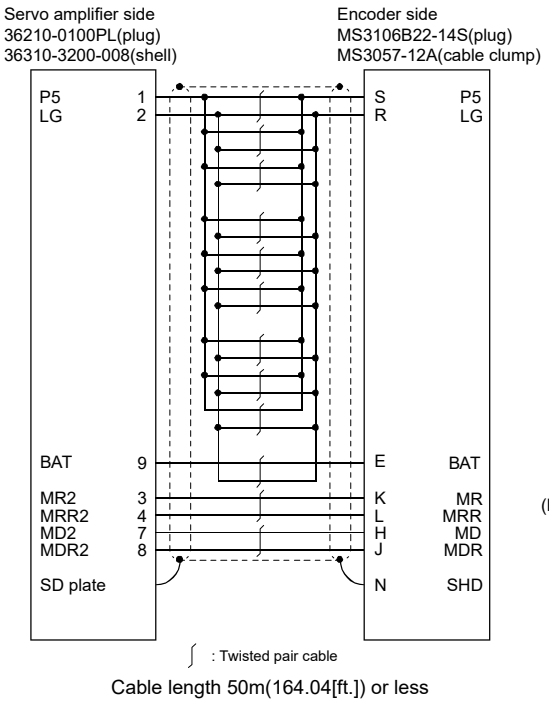

Cable length 50m(164.04[ft.]) or less

(Note): Layout twisted pair for signal to avoid contact.

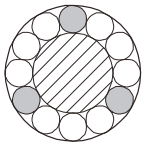

Cable cross-section diagram

: Twisted pair for signal (BAT/LG, MR/MRR, MD/MDR)

: Twisted pair (P5/LG)

: Core

(2) External dimension drawing

(a) Serial absolute synchronous encoder (Q171ENC-W8)

[Unit: mm (inch)]

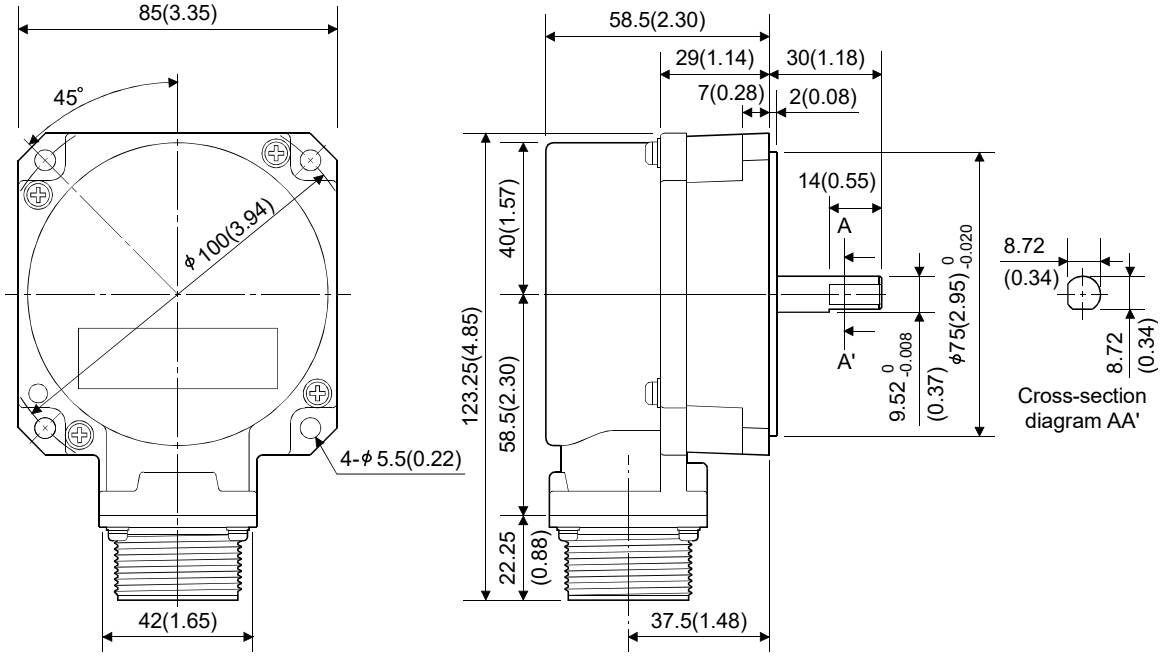

(3) Serial absolute synchronous encoder cable connector (made by 3M Japan Limited, SCR type)

(a) Model

Plug: 36210-0100PL

Shell: 36310-3200-008

[Unit: mm (inch)]

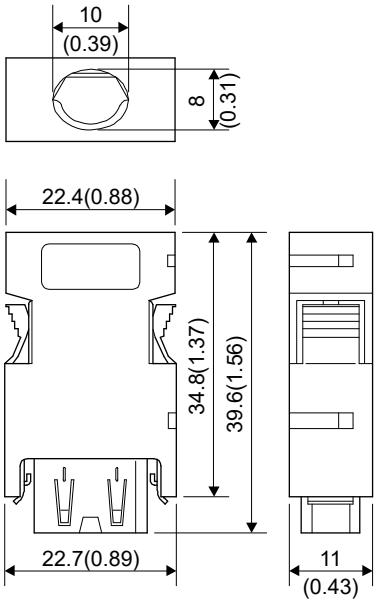

(4) Mounting of serial absolute synchronous encoder

This section describes precautions for handling the serial absolute synchronous encoder.

- If the serial absolute synchronous encoder is linked to a chain, timing belt, or gears, the machine rotating shaft should be supported by a separate bearing and connected to serial absolute synchronous encoder through a bellows coupling. Ensure that excessive force (greater than the permitted shaft load) is not applied to the shaft of serial absolute synchronous encoder.

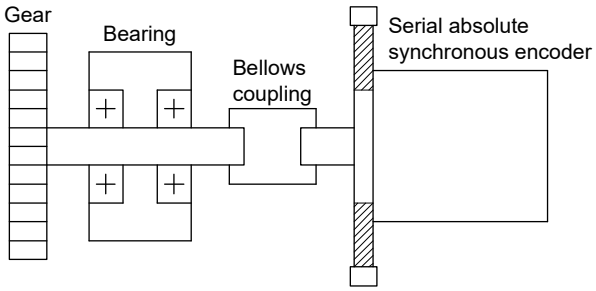

Item	Radial direction	Thrust direction
Permitted shaft load	Up to 19.6 N	Up to 9.8 N

- Excessive load is applied to the shaft of serial absolute synchronous encoder by the large mounting errors in eccentricity and angle of deviation. As a result, it might damage the machine or shorten extremely the life. Minimize loads applied to the shaft such that they make within the permitted shaft load range.

⚠CAUTION

- The serial absolute synchronous encoder contains a glass disk and precision mechanism. Take care when handling it. The encoder performance may deteriorate if it is dropped or subjected to shocks or vibration exceeding the prescribed limits.
- Do not connect the shaft of serial absolute synchronous encoder directly to machine side rotary shaft. Always after connecting the shaft of serial absolute synchronous encoder to another bearing once, connect the shaft through a flexible bellows coupling.
- Never hit the end of the serial absolute synchronous encoder shaft with a hammer when connecting the bellows coupling to it. The large loads applied to serial absolute synchronous encoder will damage it.
- The serial absolute synchronous encoder uses optical parts. Mount it in an atmosphere where there are extremely few water drops and little oil and dust.
- When mounting the serial absolute synchronous encoder to any place where it is exposed to water and/or oil, provide protection from oil and water, e.g. mount a cover. In addition, run the cable downward to prevent oil and/or water from running on the cable into the serial absolute synchronous encoder. When it is inevitable to mount the serial absolute synchronous encoder vertically or obliquely, trap for the cable.
- Use the serial absolute synchronous encoder within the specified temperature range (-5 to 55°C).
- Do not use rigid couplings. Doing so applies an excessive bending load to the axis, and may break the axis of the servo motor or cause deterioration of the bearings.

Appendix 2.3 SSCNETⅢ cable (SC-J3BUS_M-C) manufactured by Mitsubishi Electric System & Service

POINT

- For the details of the SSCNETⅢ cables, contact your local sales office.
- Do not look directly at the light generated from CN1A/CN1B connector of servo amplifier or the end of SSCNETⅢ cable. The light can be a discomfort when it enters the eye.

The cable is available per 1[m] up to 100[m]. The number of the length (1 to 100) will be in the "_" part in the cable model.

Cable model	Cable length [m(ft.)]	Bending life	Application/ remark
SC-J3BUS_M-C	1 to 100 (3.28 to 328.08)	Ultra-long bending life	Long distance cable

Appendix 3 Connection with external device

Appendix 3.1 Connector

Mounted onto an external input connection connector of the QD77MS and used for wiring an external device. The "external device connector" includes the following 4 types.

(1) Appearance

A6CON1 A6CON2 A6CON4

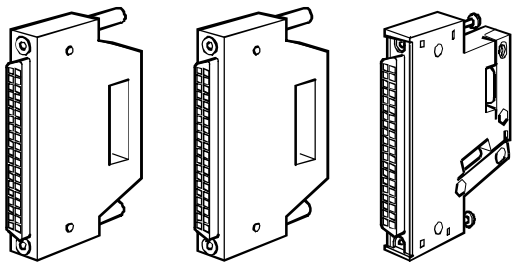

(2) Connector type

Type	Model
	Connector
Soldering type, useable for straight out	A6CON1
Crimp-contact type, useable for straight out	A6CON2
Soldering type, useable for straight out and diagonal out	A6CON4

(3) Specifications of the connector

Part name	Specification	
Applicable connector	A6CON1, A6CON4	A6CON2
Applicable wire size	0.3 mm^2	AWG28 to 24

(Note): The external input wiring connector has been prepared. Please purchase them by customer.

Specialized tool
- Pressure-bonding tool for A6CON2
  Model name: FCN-363T-T005/H
- Contact for the specialized tool:
  Fujitsu component LTD.

(4) External dimension drawing

A6CON1/A6CON2

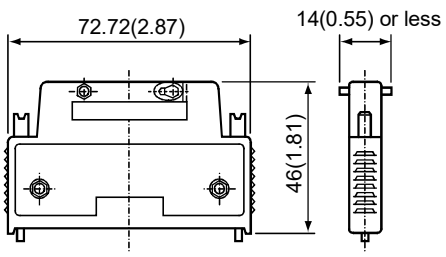

A6CON4

Unit: mm (inch)

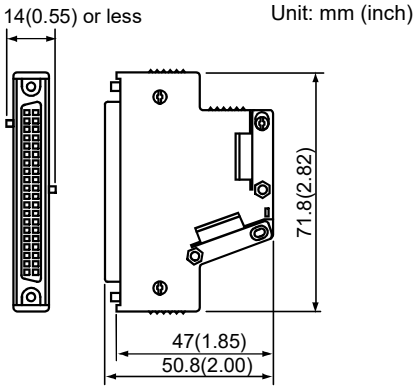

Appendix 3.2 External input signal cable

The external input signal cable is not prepared as an option. Fabricate the cable on the customer side. The connection diagram differs depending on the type of the manual pulse generator/incremental synchronous encoder to be used and the connected power supply.
Make the cable as shown in the following connection diagram.

When using the external power supply (Recommended)

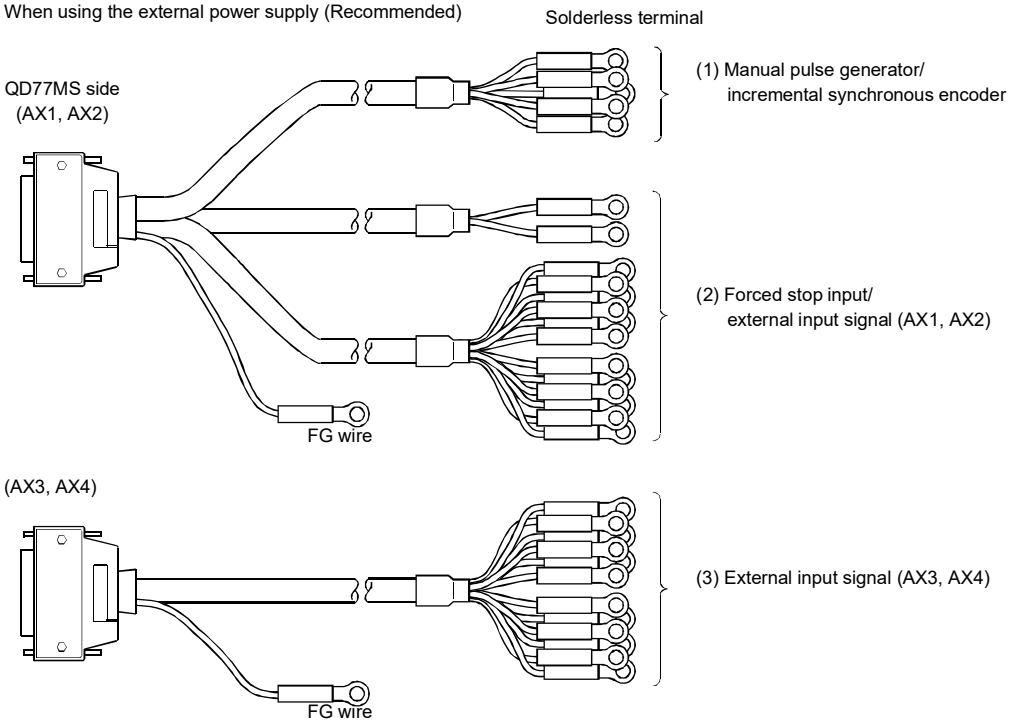

When using the internal power supply

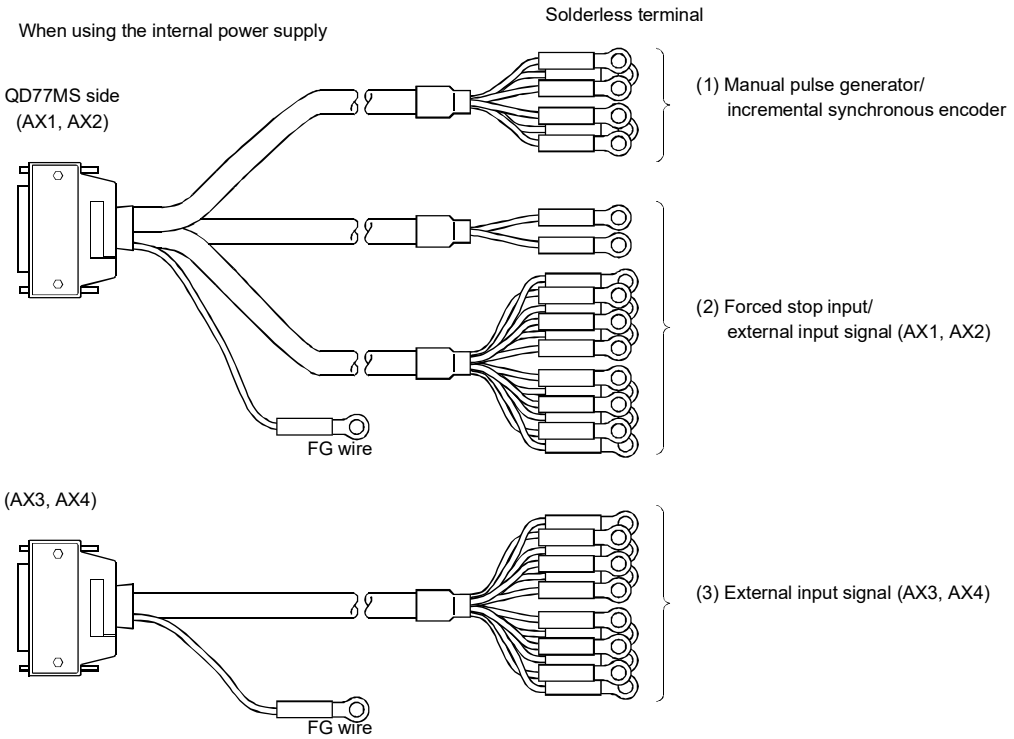

(1) Manual pulse generator/ Incremental synchronous encoder

(a) Differential-output type

Make the cable within 30m (98.43ft.).

When using the external power supply (Recommended

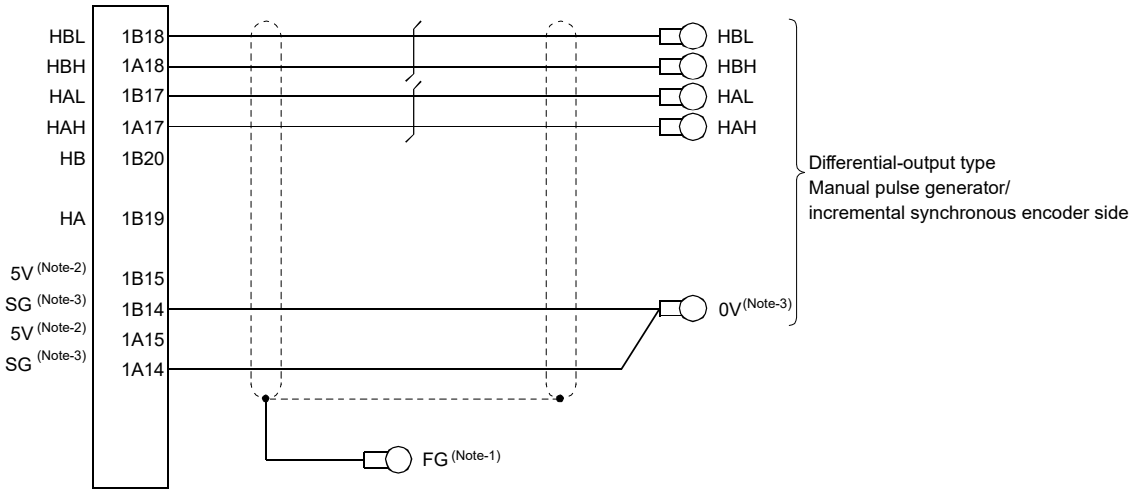

When using the internal power supply

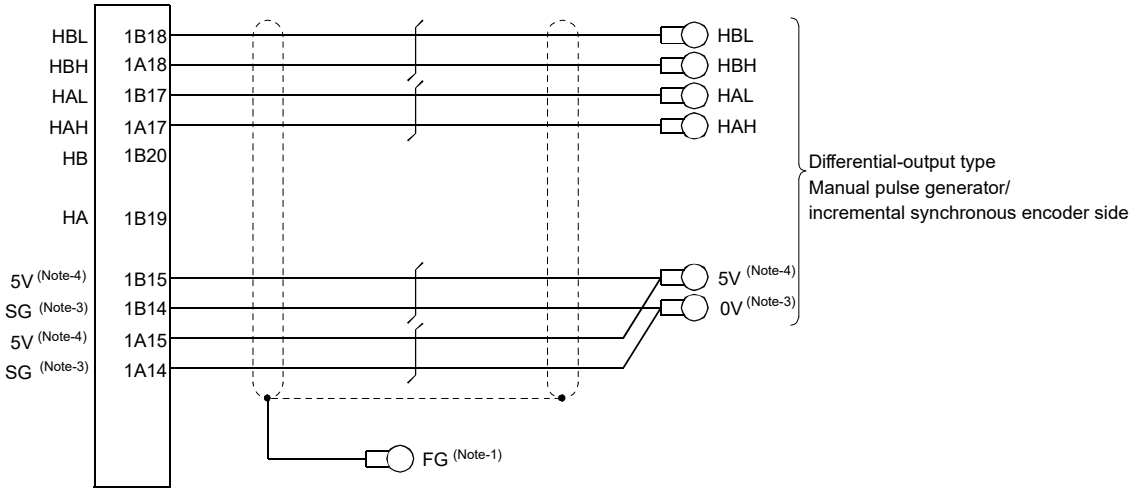

∫ : Twisted pair cable

(Note-1): Ground FG terminal on the used equipment side.
(Note-2): The 5VDC power supply from the Simple Motion module must not be used.
(Note-3): Be sure to connect the 0 V (-) of the manual pulse generator/incremental synchronous encoder and the SG of the Simple Motion module.
(Note-4): Be sure not to be used except for supplying the power to the manual pulse generator.

(b) Voltage-output/Open-collector type

Make the cable within 10m (32.81ft.).

When using the external power supply (Recommended)

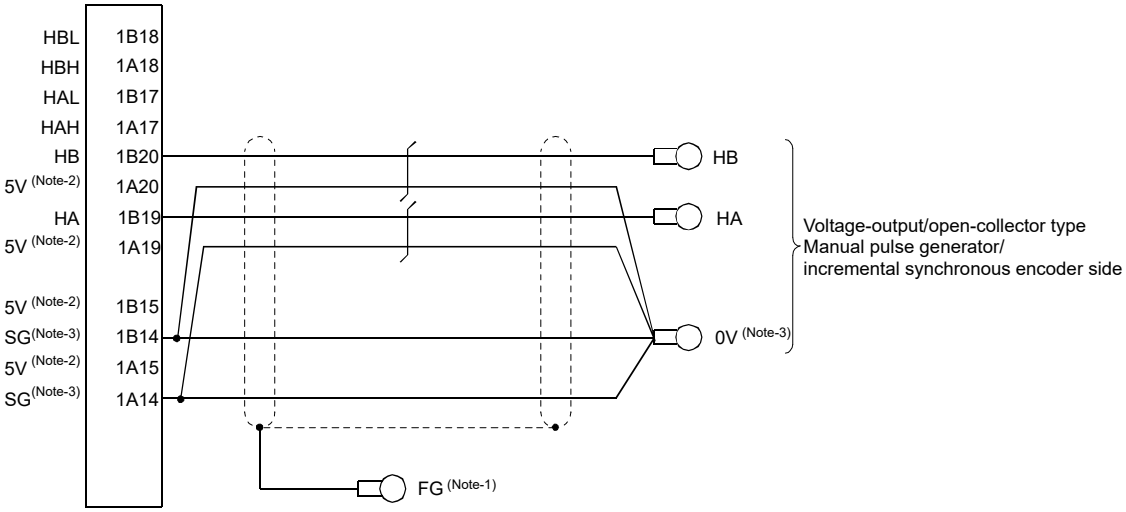

When using the internal power supply

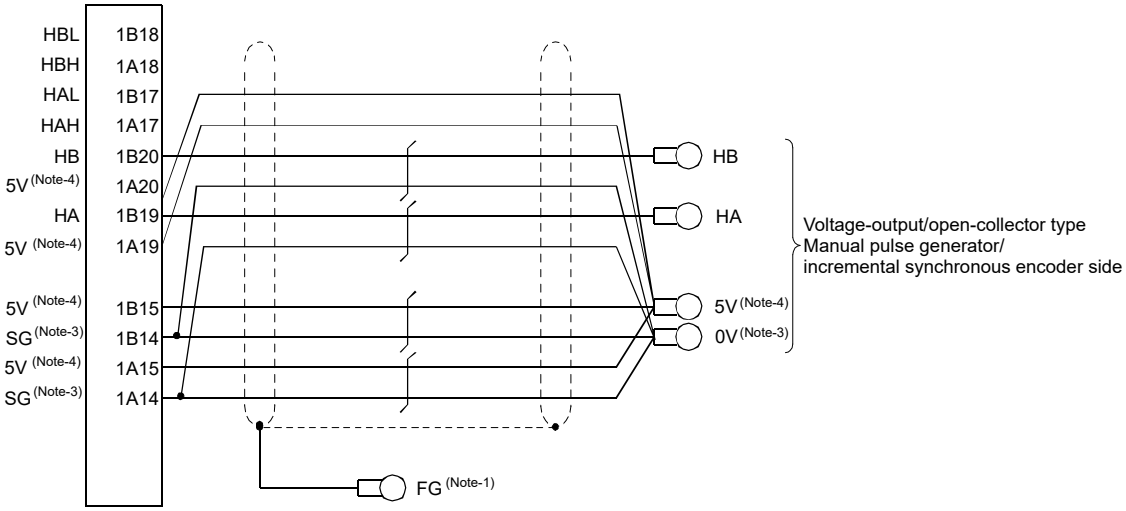

⌠: Twisted pair cable

(Note-1): Ground FG terminal on the used equipment side.
(Note-2): The 5VDC power supply from the Simple Motion module must not be used.
(Note-3): Be sure to connect the 0 V (-) of the manual pulse generator/incremental synchronous encoder and the SG of the Simple Motion module.
(Note-4): Be sure not to be used except for supplying the power to the manual pulse generator.

(2) Forced stop input/ External input signal (AX1, AX2)

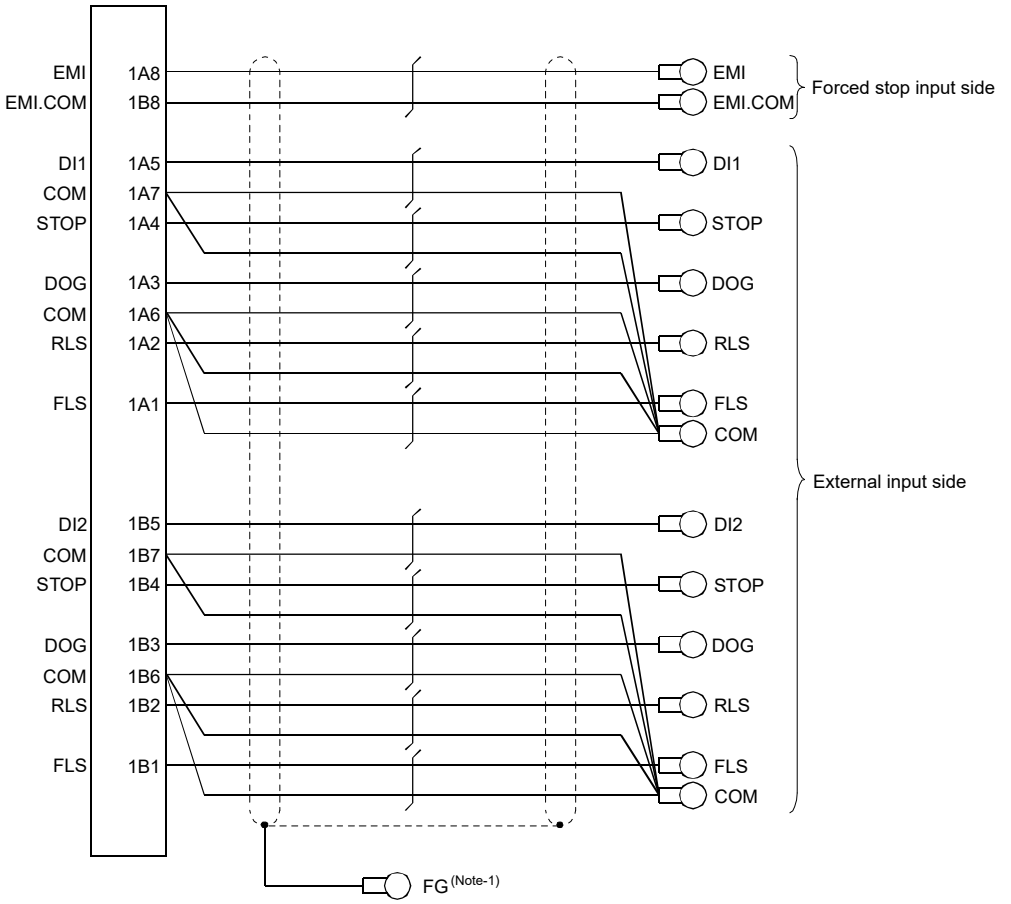

∫: Twisted pair cable

(Note-1): Ground FG terminal on the used equipment side.

(3) External input signal (AX3, AX4)

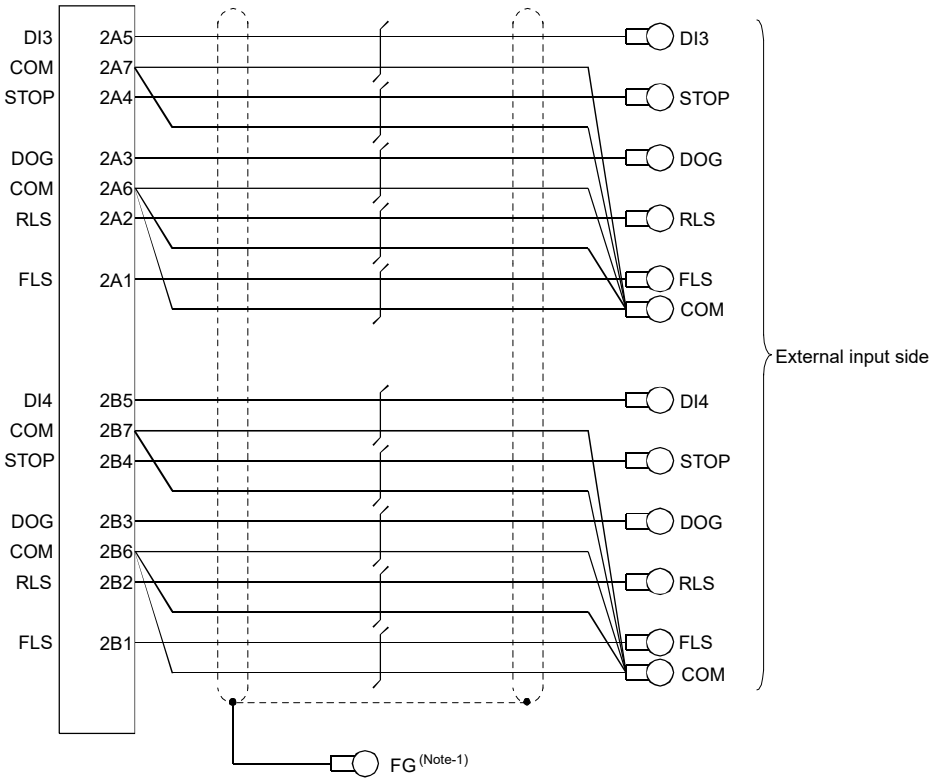

(Note-1): Ground FG terminal on the used equipment side.

1) The following table indicates the external input wiring cables. Make selection according to your operating conditions.

Table 3.1 Table of wire specifications

Wire model	Core size [mm^2]	Number of cores	Characteristics of one core			Finish OD [mm](Note-2)
			Structure [Number of wires/mm]	Conductor resistance [Ω/km]	Insulating sheath OD d[mm](Note-1)	
17/0.16 1P SRV-SV(2464)-K	0.3mm^2	2(1 pairs)	17/0.16	57.5	0.77	5.3
17/0.16 4P SRV-SV(2464)-K	0.3mm^2	8(4 pairs)	17/0.16	57.5	0.77	7.6
17/0.16 10P SRV-SV(2464)-K	0.3mm^2	20(10 pairs)	17/0.16	57.5	0.77	10.0

(Note-1): d is as shown below.

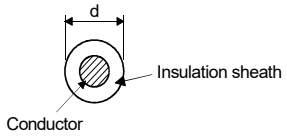

(Note-2): Standard OD. Max. OD is about 10% larger.

⚠CAUTION

- When fabricating the cable, do not make incorrect connection. Wrong connection will cause runaway or explosion.

Appendix 3.3 Manual pulse generator (MR-HDP01)

(1) External dimension drawing

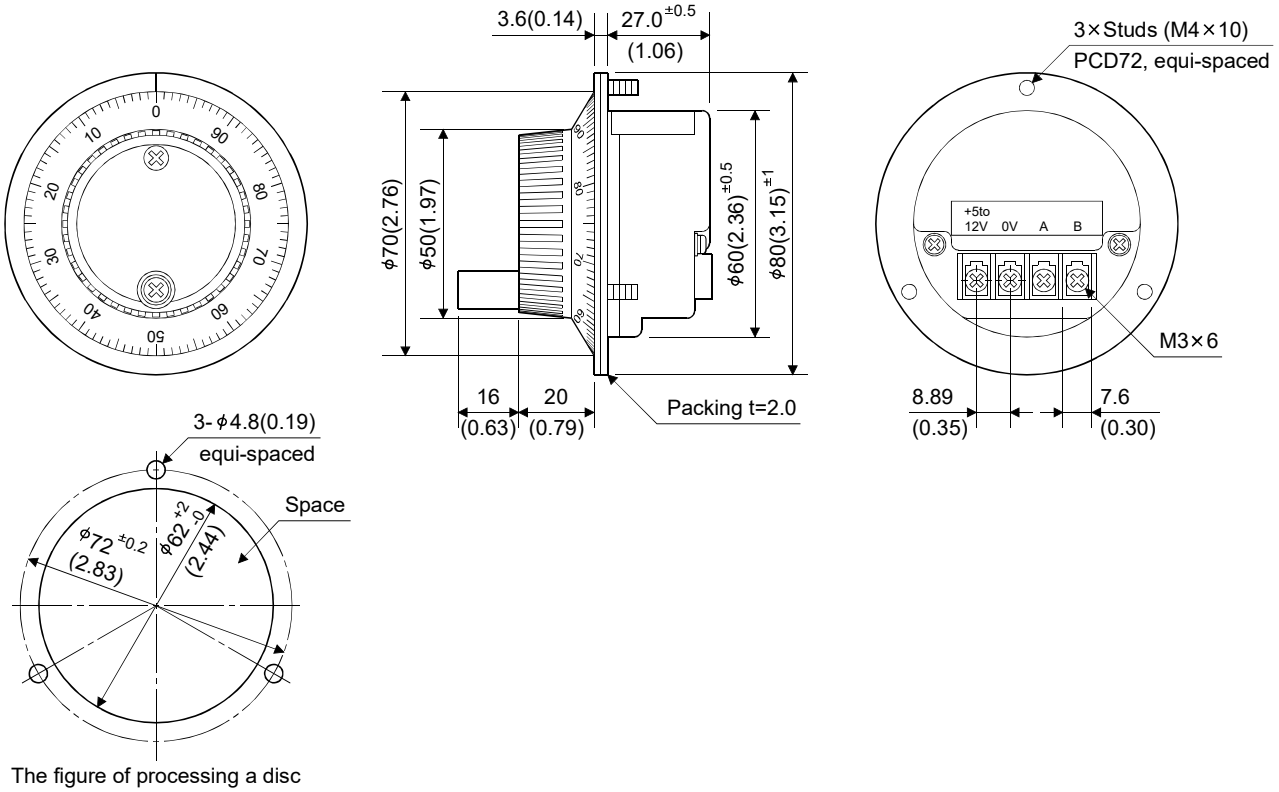

The figure of processing a disc

Appendix 4 Comparisons with positioning modules/LD77MH models

Appendix 4.1 Differences with QD75MH models

(1) Differences of performance specifications

Item \ Model		QD77MS2	QD77MS4	QD77MS16	QD75MH2	QD75MH4
Number of control axes		2	4	16	2	4
Operation cycle [ms]		0.88/1.77			1.77	
Control method	Speed-torque control	○			×	
Synchronous control		○			×	
Starting time (1-axis linear)	Trapezoidal acceleration/ deceleration	0.88ms		1.77ms	3.5ms	
	S-curve acceleration/ deceleration				4.0ms	
SSCNET communication		SSCNETⅢ/H or SSCNETⅢ			SSCNETⅢ	
Compatible servo amplifier		MR-J5-_B_/MR-J5W_-_B/MR-J5-_B_-RJ/ MR-J4-_B_/MR-J4W_-_B/MR-J4-_B_-RJ/ MR-J3-_B_/MR-J3W-_B/MR-J3-_B_-RJ006/ MR-J3-_BS_/MR-J3-_B_-RJ004/ MR-J3-_B-RJ080W/MR-JE-_B(F)			MR-J3-_B_/MR-J3W-_B/MR-J3-_B_-RJ006/ MR-J3-_BS_/MR-J3-_B_-RJ004/ MR-J3-_B-RJ080W (Note-1)	
Controlled servo parameter group	SSCNETⅢ/H	PA, PB, PC, PD, PE, PS, PF, Po, PL			×	
	SSCNETⅢ	PA, PB, PC, PD, PE, PS, PF, Po			PA, PB, PC, PD, PE, PS	
Monitor data refresh cycle [ms]		Operation cycle			1.77	Other than the following
					56.8	Feed machine value, Speed command, Axis speed command, External input signal, Forced stop input
Manual pulse generator	Signal input form	Set "differential-output type" or "voltage-output/open-collector type" by parameter ([Pr.89]).			Automatic recognition of "differential-output type" or "voltage-output/open-collector type" by hardware	
	1 pulse input magnification	1 to 10000			1 to 1000 (Note-1)	
Machine HPR function (HPR method)		6 types (Proximity dog method, Count method 1) 2), Data set method, Scale origin signal detection method, Driver HPR method)			4 types (Proximity dog method, Count method 1) 2), Data set method)	
External signal selection function		External input signal of QD77MS (FLS, RLS, DOG, STOP, DI) / External input signal of servo amplifier (FLS, RLS, DOG) / external input signal via CPU (buffer memory : FLS, RLS, DOG)			External input signal of QD75MH (FLS, RLS, DOG, STOP, CHG) / external input signal of servo amplifier (FLS, RLS, DOG)	
Torque change function		Forward/reverse same setting and individual setting			Forward/reverse same setting only (Note-1)	
Amplifier-less operation function		○			× (Note-1)	
Virtual servo amplifier function		○			×	
Mark detection function		○			×	
Optional data monitor function		○			×	
Module error collection function		○			×	

Differences of performance specifications (Continued)

Item \ Model	QD77MS2	QD77MS4	QD77MS16	QD75MH2	QD75MH4
Connect/disconnect function of SSCNET communication	○			×	
Hot line forced stop function	○			×	
History data (Start, Error, Warning, Current value)	Information display of "Year, Month, Day, Hour, Minute, Second"			Information display of "Hour, Minute, Second"	
5VDC internal current consumption [A]	0.6		0.75	0.60	
Mass [kg]	0.15	0.16		0.15	0.16
External command signal: Switching signal	DI signal (External start or speed-position switching can be selected by parameter.)			CHG signal (External start or speed-position switching can be selected by parameter.)	
Speed-position/position-speed switching control	Speed-position switching can be selected by external command signal (DI), proximity dog signal (DOG) or "[Cd.46] Speed-position switching command".			Speed-position switching by external command signal (CHG).	
Programming tool	GX Works2, MR Configurator2			GX Works2/ GX Developer, GX Configurator-QP	
Upper limit value of electronic gear setting range	(Note-2)			10000	

○ : Possible, × : Not possible

(Note-1): These functions are equal to the QD77MS's specification in the following version of QD75MH.
Rating plate: 110720000000000-B or later, Product information: 110520000000000-B or later

(Note-2): The value varies depending on the product information as follows.
Before 150320000000000 : 20000,
150320000000000 or later: 320000

(2) Differences of function

(a) Added functions

Functions	Remarks
Scale origin signal detection method HPR	Refer to Section 8.2.7.
Driver HPR method	Refer to Appendix 6.3.
Speed-torque control	Refer to Section 12.1.
Virtual servo amplifier function	Refer to Section 14.8.
Driver communication function	Refer to Section 14.9.
Mark detection function	Refer to Section 14.10.
Optional data monitor function	Refer to Section 14.11.
Module error collection function	Refer to Section 14.12.
Connect/disconnect function of SSCNET communication	Refer to Section 14.13.
QD75MH initial value setting function	Refer to Section 14.14.
Servo amplifier command value error check function	Refer to Section 14.15.
Hot line forced stop function	Refer to Section 14.16.
Compatible with servo driver VCII series/VPH series manufactured by CKD NIKKI DENSO CO., LTD.	Refer to Appendix 6.1.
Compatible with inverter FR-A700 series	Refer to Appendix 6.2.
AlphaStep/5-phase stepping motor driver manufactured by ORIENTAL MOTOR Co., Ltd.	Refer to Appendix 6.3.
IAI electric actuator controller manufactured by IAI Corporation	Refer to Appendix 6.4.
Synchronous encoder via servo amplifier	Refer to "MELSEC-Q/L QD77MS/QD77GF/LD77MS/LD 77MH Simple Motion Module User's Manual (Synchronous Control)".
Command generation axis	

(b) Changed functions

Function	Description	Specification				
		QD77MS2	QD77MS4	QD77MS16	QD75MH2	QD75MH4
Input signal [X0]	Signal name	READY			QD75 READY	
[Pr.7] Bias speed at start	Range of setting value	<Setting unit is PLS> 0 to 1000000000 [PLS/s]			Maker setting	
[Pr.8] Speed limit value	Range of setting value	<Control unit is PLS> 1 to 1000000000 [PLS/s]			<Control unit is PLS> 1 to 50000000 [PLS/s]	
[Pr.22] Input signal logic selection	Range of setting value	b8: Only the value specified against the axis 1 is valid			No limitation	
[Pr.24] Manual pulse generator /Incremental synchronous encoder input selection	Name	Manual pulse generator/Incremental synchronous encoder input selection			Manual pulse generator input selection	
[Pr.31] JOG speed limit value	Range of setting value	<Control unit is PLS> 1 to 1000000000 [PLS/s]			<Control unit is PLS> 1 to 50000000 [PLS/s]	
[Pr.42] External command function selection	Range of setting value	0: External positioning start 1: External speed change request 2: Speed-position, position-speed switching request 3: Skip request 4: High speed input request			0: External positioning start 1: External speed change request 2: Speed-position, position-speed switching request 3: Skip request	
[Pr.43] HPR method	Range of setting value	0: Proximity dog method 4: Count method 1) 5: Count method 2) 6: Data set method 7: Scale origin signal detection method 8: Driver HPR method			0: Proximity dog method 4: Count method 1) 5: Count method 2) 6: Data set method	
[Pr.46] HPR speed	Range of setting value	<Control unit is PLS> 1 to 1000000000 [PLS/s]			<Control unit is PLS> 1 to 50000000 [PLS/s]	
[Pr.47] Creep speed	Range of setting value	<Control unit is PLS> 1 to 1000000000 [PLS/s]			<Control unit is PLS> 1 to 50000000 [PLS/s]	
[Pr.80] External input signal selection	Range of setting value	0: External input signal of QD77MS QD77MS2 QD77MS4 1: External input signal of servo amplifier 2: Buffer memory of QD77MS 3: External input signal 1 of QD77MS QD77MS16 4: External input signal 2 of QD77MS QD77MS16 5: External input signal 3 of QD77MS QD77MS16 6: External input signal 4 of QD77MS QD77MS16			0: External input signal of QD75MH 1: External input signal of servo amplifier	
[Pr.82] Forced stop valid/invalid selection	Range of setting value	0: Valid (External input signal) 1: Invalid 2: Valid (Buffer memory)			0: Valid 1: Invalid	
[Pr. 89] Manual pulse generator /Incremental synchronous encoder input type selection	New parameter	0: Differential-output type 1: Voltage-output/Open-collector type			No setting (Automatic recognition by hardware)	

Changed functions (Continued)

Function	Description	Specification				
		QD77MS2	QD77MS4	QD77MS16	QD75MH2	QD75MH4
[Pr.91] Optional data monitor: Data type setting 1 [Pr.92] Optional data monitor: Data type setting 2 [Pr.93] Optional data monitor: Data type setting 3 [Pr.94] Optional data monitor: Data type setting 4	New parameter	0: No setting 1: Effective load ratio 2: Regenerative load ratio 3: Peak load ratio 4: Load inertia moment ratio 5: Model loop gain 6: Bus voltage 7: Servo motor speed 8: Encoder multiple revolution counter 9: Unit power consumption 10: Instantaneous torque 12: Servo motor thermistor temperature 13: Torque Equivalent to Disturbance 14: Overload alarm margin 15: Excessive error alarm margin 16: Settling time 17: Overshoot amount 18: Internal temperature of encoder 20: Position feedback 21: Encoder position within one revolution 22: Selected droop pulse 23: Unit total power consumption 24: Load-side encoder information 1 25: Load-side encoder information 2 26: Z-phase counter 27: Servo motor side/load-side position deviation 28: Servo motor side/load-side speed deviation 29: External encoder counter value 30: Unit power consumption (2 words) Most significant bit + Address value: Optional address of registered monitor			No parameter setting	
[Pr.95] External command signal selection	New parameter	No parameter setting		0: Not used 1: DI1 2: DI2 3: DI3 4: DI4	No parameter setting	
[Pr.96] Operation cycle setting	New parameter	0: 0.88ms 1: 1.77ms			No parameter setting	
[Pr.97] SSCNET setting	New parameter	0: SSCNETⅢ 1: SSCNETⅢ/H			No parameter setting	
[Pr.114] External command signal compensation valid/invalid setting	New parameter	0: Invalid 1: Valid			No parameter setting	
Starting history	Information display of starting time	Starting time is displayed by "Year, Month, Day, Hour, Minute, Second". [Md.54] Start Year: month [Md.5] Start Day: hour [Md.6] Start Minute: second			Starting time is displayed by "Hour, Minute, Second". [Md.5] Start Hour [Md.6] Start Minute: second	

Changed functions (Continued)

Function	Description	Specification				
		QD77MS2	QD77MS4	QD77MS16	QD75MH2	QD75MH4
Axis error occurrence time	Information display of axis error occurrence time	Occurrence time of axis error is displayed by "Year, Month, Day, Hour, Minute, Second". [Md.55] Axis error occurrence (Year: month) [Md.11] Axis error occurrence (Day: hour) [Md.12] Axis error occurrence (Minute: second)			Occurrence time of axis error is displayed by "Hour, Minute, Second". [Md.11] Axis error occurrence (Hour) [Md.12] Axis error occurrence (Minute: second)	
Axis warning occurrence time	Information display of axis warning occurrence time	Occurrence time of axis warning is displayed by "Year, Month, Day, Hour, Minute, Second". [Md.56] Axis warning occurrence (Year: month) [Md.16] Axis warning occurrence (Day: hour) [Md.17] Axis warning occurrence (Minute: second)			Occurrence time of axis warning is displayed by "Hour, Minute, Second". [Md.16] Axis warning occurrence (Hour) [Md.17] Axis warning occurrence (Minute: second)	
[Md.26] Axis operation status	Range of monitor value	-2: Step standby -1: Error 0: Standby 1: Stopped 2: Interpolation 3: JOG operation 4: Manual pulse generator operation 5: Analyzing 6: Special start standby 7: HPR 8: Position control 9: Speed control 10: Speed control in speed-position switching control 11: Position control in speed-position switching control 12: Position control in position-speed switching control 13: Speed control in position-speed switching control 15: Synchronous control 20: Servo amplifier has not been connected/servo amplifier power OFF 21: Servo OFF 30: Control mode switch 31: Speed control 32: Torque control 33: Continuous operation to torque control			-2: Step standby -1: Error 0: Standby 1: Stopped 2: Interpolation 3: JOG operation 4: Manual pulse generator operation 5: Analyzing 6: Special start standby 7: HPR 8: Position control 9: Speed control 10: Speed control in speed-position switching control 11: Position control in speed-position switching control 12: Position control in position-speed switching control 13: Speed control in position-speed switching control 20: Servo amplifier has not been connected/servo amplifier power OFF 21: Servo OFF	
[Md.31] Status	Range of monitor value	b0: In speed control flag b1: Speed-position switching latch flag b2: Command in-position flag b3: HPR request flag b4: HPR complete flag b5: Position-speed switching latch flag b9: Axis warning detection b10: Speed change 0 flag b12: M code ON QD77MS16 b13: Error detection QD77MS16 b14: Start complete QD77MS16 b15: Positioning complete QD77MS16			b0: In speed control flag b1: Speed-position switching latch flag b2: Command in-position flag b3: HPR request flag b4: HPR complete flag b5: Position-speed switching latch flag b9: Axis warning detection b10: Speed change 0 flag	

Changed functions (Continued)

Function	Description	Specification				
		QD77MS2	QD77MS4	QD77MS16	QD75MH2	QD75MH4
[Md.47] Positioning data being executed	Storage item	Positioning identifier ([Da.1] to [Da.4], [Da.5] QD77MS2 QD77MS4) Positioning address ([Da.6]) Arc address ([Da.7]) Command speed ([Da.8]) Dwell time /JUMP destination positioning data No. ([Da.9]) M code /Condition data No./Number of LOOP to LEND repetitions ([Da.10]) Axis to be interpolated ([Da.20] to [Da.22]) QD77MS16			Positioning identifier ([Da.1] to [Da.5]) Positioning address ([Da.6]) Arc address ([Da.7]) Command speed ([Da.8]) Dwell time /JUMP destination positioning data No. ([Da.9]) M code /Condition data No./Number of LOOP to LEND repetitions ([Da.10])	
[Md.57] Servo alarm	New monitor data	The LED display details of servo amplifier detection alarm			No monitor data	
[Md.58] Servo warning	New monitor data	The LED display details of servo amplifier detection warning			No monitor data	
[Md.59] Module information	New monitor data	b0, b1: Number of axes b12: Module information			No monitor data	
[Md.61] Driver operation alarm number	New monitor data	Displays the driver operation alarm number.			No monitor data	
[Md.107] Parameter error No.	Range of monitor value	<SSCNETⅢ/H> 1 to 64 : PA01 to PA64 65 to 128 : PB01 to PB64 129 to 192: PC01 to PC64 193 to 256: PD01 to PD64 257 to 320: PE01 to PE64 321 to 384: PF01 to PF64 385 to 448: Po01 to Po64 449 to 512: PS01 to PS64 513 to 576: PL01 to PL64 <SSCNETⅢ> 1 to 18 : PA01 to PA18 19 to 63 : PB01 to PB45 64 to 95 : PC01 to PC32 96 to 127 : PD01 to PD32 128 to 167: PE01 to PE40 168 to 183: PF01 to PF16 184 to 199: Po01 to Po16 200 to 231: PS01 to PS32 232 : PA19			<SSCNETⅢ> 1 to 18 : PA01 to PA18 19 to 63 : PB01 to PB45 64 to 95 : PC01 to PC32 96 to 127: PD01 to PD32	

Changed functions (Continued)

<table>
<tr><th rowspan="2">Function</th><th rowspan="2">Description</th><th colspan="5">Specification</th></tr>
<tr><th>QD77MS2</th><th>QD77MS4</th><th>QD77MS16</th><th>QD75MH2</th><th>QD75MH4</th></tr>
<tr><td rowspan="2">[Md.108] Servo status</td><td rowspan="2">Range of monitor value</td><td colspan="3">Low-order buffer memory
b0: Zero point pass
b3: Zero speed
b4: Speed limit
b8: PID control</td><td colspan="2">Low-order buffer memory
b0: Zero point pass
b3: Zero speed</td></tr>
<tr><td colspan="3">High-order buffer memory
b0: READY ON
b1: Servo ON
b2, b3: Control mode
b4: Gain switching
b5: Fully closed loop control switching
b7: Servo alarm
b12: In-position
b13: Torque limit
b14: Absolute position lost
b15: Servo warning</td><td colspan="2">High-order buffer memory
b0: READY ON
b1: Servo ON
b7: Servo alarm
b12: In-position
b13: Torque limit
b14: Absolute position lost
b15: Servo warning</td></tr>
<tr><td>[Md.109] Regenerative load ratio/Optional data monitor output 1</td><td rowspan="3">Name</td><td colspan="3">Regenerative load ratio/Optional data monitor output 1</td><td colspan="2">Regenerative load ratio</td></tr>
<tr><td>[Md.110] Effective load torque/Optional data monitor output 2</td><td colspan="3">Effective load torque/Optional data monitor output 2</td><td colspan="2">Effective load torque</td></tr>
<tr><td>[Md.111] Peak torque ratio/ Optional data monitor output 3</td><td colspan="3">Peak torque ratio/Optional data monitor output 3</td><td colspan="2">Peak torque ratio</td></tr>
<tr><td>[Md.112] Optional data monitor output 4</td><td>New monitor data</td><td colspan="3">Content set in "[Pr.94] Optional data monitor: Data type setting 4" is displayed.</td><td colspan="2">No monitor data</td></tr>
<tr><td>[Md.113] Semi/Fully closed loop status</td><td>Buffer memory address</td><td>Axis 1: 887
Axis 2: 987</td><td>Axis 1: 887
Axis 2: 987
Axis 3: 1087
Axis 4: 1187</td><td>Axis 1: 2487
Axis 2: 2587
Axis 3: 2687
Axis 4: 2787
to
Axis 16: 3987</td><td>Axis 1: 881
Axis 2: 981</td><td>Axis 1: 881
Axis 2: 981
Axis 3: 1081
Axis 4: 1181</td></tr>
<tr><td>[Md.116] Encoder option information</td><td>New storage item</td><td colspan="3">Compatible with continuous operation to torque control
Compatible with scale measurement mode</td><td colspan="2">No storage item</td></tr>
<tr><td>[Md.132] Operation cycle setting</td><td rowspan="4">New monitor data</td><td colspan="3">0: 0.88ms
1: 1.77ms</td><td colspan="2">No monitor data</td></tr>
<tr><td>[Md.133] Operation cycle over flag</td><td colspan="3">0: OFF
1: ON (Operation cycle over occurred.)</td><td colspan="2">No monitor data</td></tr>
<tr><td>[Md.134] Operation time</td><td colspan="3">Operation time [µs]</td><td colspan="2">No monitor data</td></tr>
<tr><td>[Md.135] Maximum operation time</td><td colspan="3">Maximum operation time [µs]</td><td colspan="2">No monitor data</td></tr>
<tr><td>[Md.500] Servo status7</td><td>New monitor data</td><td colspan="3">b9: Driver operation alarm</td><td colspan="2">No monitor data</td></tr>
<tr><td>[Md.502] Driver operation alarm number</td><td>New monitor data</td><td colspan="3">Displays the driver operation alarm number.</td><td colspan="2">No monitor data</td></tr>
<tr><td>[Cd.14] New speed value</td><td>Range of setting value</td><td colspan="3"><Control unit is PLS>
0 to 1000000000 [PLS/s]</td><td colspan="2"><Control unit is PLS>
0 to 50000000 [PLS/s]</td></tr>
<tr><td>[Cd.17] JOG speed</td><td>Range of setting value</td><td colspan="3"><Control unit is PLS>
1 to 1000000000 [PLS/s]</td><td colspan="2"><Control unit is PLS>
1 to 50000000 [PLS/s]</td></tr>
</table>

Changed functions (Continued)

<table>
<tr><th rowspan="2">Function</th><th rowspan="2">Description</th><th colspan="5">Specification</th></tr>
<tr><th>QD77MS2</th><th>QD77MS4</th><th>QD77MS16</th><th>QD75MH2</th><th>QD75MH4</th></tr>
<tr><td>[Cd.24] Speed-position switching enable flag</td><td>Details of setting value</td><td colspan="3">0: Speed control will not be taken over by position control even when the signal set in "[Cd.45] Speed-position switching device selection" comes ON.
1: Speed control will be taken over by position control when the signal set in "[Cd.45] Speed-position switching device selection" comes ON.</td><td colspan="2">0: Speed control will not be taken over by position control even when the external command signal [CHG] comes ON.
1: Speed control will be taken over by position control when the external command signal [CHG] comes ON</td></tr>
<tr><td>[Cd.25] Position-speed switching control speed change register</td><td>Range of setting value</td><td colspan="3"><Control unit is PLS>
0 to 1000000000 [PLS/s]</td><td colspan="2"><Control unit is PLS>
0 to 50000000 [PLS/s]</td></tr>
<tr><td>[Cd.26] Position-speed switching enable flag</td><td>Details of setting value</td><td colspan="3">0: Position control will not be taken over by speed control even when the signal set in "[Cd.45] Speed-position switching device selection" comes ON.
1: Position control will be taken over by speed control when the signal set in "[Cd.45] Speed-position switching device selection" comes ON.</td><td colspan="2">0: Position control will not be taken over by speed control even when the external command signal [CHG] comes ON.
1: Position control will be taken over by speed control when the external command signal [CHG] comes ON.</td></tr>
<tr><td>[Cd.28] Target position change value (New speed)</td><td>Range of setting value</td><td colspan="3"><Control unit is PLS>
0 to 1000000000 [PLS/s]</td><td colspan="2"><Control unit is PLS>
0 to 50000000 [PLS/s]</td></tr>
<tr><td>[Cd.30] Simultaneous starting own axis start data No.</td><td rowspan="4">Name</td><td colspan="2">[Cd.30] Simultaneous starting axis start data No.
(axis 1 start data No.)</td><td>[Cd.30] Simultaneous starting own axis start data No.</td><td colspan="2">[Cd.30] Simultaneous starting axis start data No.
(axis 1 start data No.)</td></tr>
<tr><td>[Cd.31] Simultaneous starting axis start data No.1</td><td colspan="2">[Cd.31] Simultaneous starting axis start data No.
(axis 2 start data No.)</td><td>[Cd.31] Simultaneous starting axis start data No.1</td><td colspan="2">[Cd.31] Simultaneous starting axis start data No.
(axis 2 start data No.)</td></tr>
<tr><td>[Cd.32] Simultaneous starting axis start data No.2</td><td>No control data</td><td>[Cd.32] Simultaneous starting axis start data No. (axis 3 start data No.)</td><td>[Cd.32] Simultaneous starting axis start data No.2</td><td>No control data</td><td>[Cd.32] Simultaneous starting axis start data No. (axis 3 start data No.)</td></tr>
<tr><td>[Cd.33] Simultaneous starting axis start data No.2</td><td>No control data</td><td>[Cd.33] Simultaneous starting axis start data No. (axis 4 start data No.)</td><td>[Cd.33] Simultaneous starting axis start data No.3</td><td>No control data</td><td>[Cd.33] Simultaneous starting axis start data No. (axis 4 start data No.)</td></tr>
</table>

Changed functions (Continued)

Function	Description	Specification				
		QD77MS2	QD77MS4	QD77MS16	QD75MH2	QD75MH4
[Cd.43] Simultaneous starting axis	New control data	No control data		Number of simultaneous starting axes 2 to 4: 2 axes to 4 axes Simultaneous starting axis No. 0 to F: Axis 1 to Axis 16	No control data	
[Cd.44] External input signal operation device	New control data	b0 : Axis 1 (Axis 5, Axis 9, Axis 13) Upper limit signal (FLS) b1 : Axis 1 (Axis 5, Axis 9, Axis 13) Lower limit signal (RLS) b2 : Axis 1 (Axis 5, Axis 9, Axis 13) Proximity dog signal (DOG) b3 : Axis 1 (Axis 5, Axis 9, Axis 13) STOP signal (STOP) b4 : Axis 2 (Axis 6, Axis 10, Axis 14) Upper limit signal (FLS) b5 : Axis 2 (Axis 6, Axis 10, Axis 14) Lower limit signal (RLS) b6 : Axis 2 (Axis 6, Axis 10, Axis 14) Proximity dog signal (DOG) b7 : Axis 2 (Axis 6, Axis 10, Axis 14) STOP signal (STOP) b8 : Axis 3 (Axis 7 , Axis 11, Axis 15) Upper limit signal (FLS) b9 : Axis 3 (Axis 7, Axis 11, Axis 15) Lower limit signal (RLS) b10 : Axis 3 (Axis 7, Axis 11, Axis 15) Proximity dog signal (DOG) b11 : Axis 3 (Axis 7, Axis 11, Axis 15) STOP signal (STOP) b12 : Axis 4 (Axis 8, Axis 12, Axis 16) Upper limit signal (FLS) b13 : Axis 4 (Axis 8, Axis 12, Axis 16) Lower limit signal (RLS) b14 : Axis 4 (Axis 8, Axis 12, Axis 16) Proximity dog signal (DOG) b15 : Axis 4 (Axis 8, Axis 12, Axis 16) STOP signal (STOP)			No control data	

Changed functions (Continued)

Function	Description	Specification				
		QD77MS2	QD77MS4	QD77MS16	QD75MH2	QD75MH4
[Cd.45] Speed-position switching device selection	New control data	<Speed-position switching control> 0: Use the external command signal for switching from speed control to position control 1: Use the proximity dog signal for switching from speed control to position control 2: Use "[Cd.46] Speed-position switching command" for switching from speed control to position control <Position-speed switching control> 0: Use the external command signal for switching from position control to speed control 1: Use the proximity dog signal for switching from position control to speed control 2: Use "[Cd.46] Speed-position switching command" for switching from position control to speed control			No control data	
[Cd.46] Speed-position switching command	New control data	<Speed-position switching control> 0: Not switch from speed control to position control 1: Switch from speed control to position control <Position-speed switching control> 0: Not switch from position control to speed control 1: Switch from position control to speed control			No control data	
[Cd.47] QD75MH initial value setting request	New control data	1: Requests QD75MH initial value setting			No control data	
[Cd.130] Servo parameter read/write request	Range of setting value	0000H : Not request (read/write completion) 0001H : 1 word write request 0002H : 2 words write request 0003H : Read/write failure 0022H : 2 words write request to internal memory 0032H : 2 words read request from internal memory Other than the above: Not request			No control data	

Changed functions (Continued)

Function	Description	Specification				
		QD77MS2	QD77MS4	QD77MS16	QD75MH2	QD75MH4
[Cd.131] Parameter No.	Range of setting value	<MR-J4(W)-B/MR-JE-B(F)> 0: PA group 1: PB group 2: PC group 3: PD group 4: PE group 5: PF group 9: Po group A: PS group B: PL group <MR-J5(W)-B> 0: PA group 1: PB group 2: PC group 3: PD group 4: PE group 5: PF group 7: PH group 8: PJ group 9: Po group A: PS group B: PL group D: PM group <VCII series/VPH series> 0: Group 0 1: Group 1 2: Group 2 3: Group 3 4: Group 4 5: Group 5 6: Group 6 7: Group 7 8: Group 8 9: Group 9			No control data	

Changed functions (Continued)

Function	Description	Specification				
		QD77MS2	QD77MS4	QD77MS16	QD75MH2	QD75MH4
[Cd.132] Change data	New control data	Set the change value of servo parameter set in "[Cd.131] Parameter No.".			No control data	
[Cd.140] Command speed at speed control mode	Range of setting value	<Control unit is PLS> -1000000000 to 1000000000 [PLS/s]			No control data	
[Cd.146] Speed limit value at torque control mode	Range of setting value	<Control unit is PLS> 0 to 1000000000 [PLS/s]			No control data	
[Cd.147] Speed limit value at continuous operation to torque control mode	Range of setting value	<Control unit is PLS> -1000000000 to 1000000000 [PLS/s]			No control data	
[Cd.158] Forced stop input	New control data	0: Forced stop ON (Forced stop) 1: Forced stop OFF (Forced stop release)			No control data	
[Cd.802] Latch data range change request	New control data	1: Change in the next Operation cycle of the requested 2: Change in the next DI input of the requested			No control data	
Axis stop	Input/output signal	Y4, Y5	Y4 to Y7	[Cd.180] Axis stop	Y4, Y5	Y4 to Y7
Forward run JOG start		Y8, YA	Y8, YA, YC, YE	[Cd.181] Forward run JOG start	Y8, YA	Y8, YA, YC, YE
Reverse run JOG start		Y9, YB	Y9, YB, YD, YF	[Cd.182] Reverse run JOG start	Y9, YB	Y9, YB, YD, YF
Execution prohibition flag	Input/output signal	Y14, Y15	Y14 to Y17	[Cd.183] Execution prohibition flag	Y14, Y15	Y14 to Y17
Axis to be interpolated	Item of buffer memory	[Da.5] Axis to be interpolated		[Da.20] Axis to be interpolated No.1 [Da.21] Axis to be interpolated No.2 [Da.22] Axis to be interpolated No.3	[Da.5] Axis to be interpolated	
[Da.8] Command speed	Range of setting value	<Control unit is PLS> 1 to 1000000000 [PLS/s]			<Control unit is PLS> 1 to 50000000 [PLS/s]	

Changed functions (Continued)

Function	Description	Specification				
		QD77MS2	QD77MS4	QD77MS16	QD75MH2	QD75MH4
[Da.16] Condition operator	Range of setting value	01: **=P1 02: **≠P1 03: **≤P1 04: **≥P1 05: P1≤**≤P2 06: **≤P1,P2≤** 07: DEV=ON 08: DEV=OFF 10: Axis 1 selected 20: Axis 2 selected 30: Axis 1 and 2 selected	01: **=P1 02: **≠P1 03: **≤P1 04: **≥P1 05: P1≤**≤P2 06: **≤P1,P2≤** 07: DEV=ON 08: DEV=OFF 10: Axis 1 selected 20: Axis 2 selected 30: Axis 1 and 2 selected 40: Axis 3 selected 50: Axis 1 and 3 selected 60: Axis 2 and 3 selected 70: Axis 1, 2 and 3 selected 80: Axis 4 selected 90: Axis 1 and 4 selected A0: Axis 2 and 4 selected B0: Axis 1, 2 and 4 selected C0: Axis 3 and 4 selected D0: Axis 1, 3 and 4 selected E0: Axis 2, 3 and 4 selected	01: **=P1 02: **≠P1 03: **≤P1 04: **≥P1 05: P1≤**≤P2 06: **≤P1,P2≤** 07: DEV=ON 08: DEV=OFF	01: **=P1 02: **≠P1 03: **≤P1 04: **≥P1 05: P1≤**≤P2 06: **≤P1,P2≤** 07: DEV=ON 08: DEV=OFF 10: Axis 1 selected 20: Axis 2 selected 30: Axis 1 and 2 selected	01: **=P1 02: **≠P1 03: **≤P1 04: **≥P1 05: P1≤**≤P2 06: **≤P1,P2≤** 07: DEV=ON 08: DEV=OFF 10: Axis 1 selected 20: Axis 2 selected 30: Axis 1 and 2 selected 40: Axis 3 selected 50: Axis 1 and 3 selected 60: Axis 2 and 3 selected 70: Axis 1, 2 and 3 selected 80: Axis 4 selected 90: Axis 1 and 4 selected A0: Axis 2 and 4 selected B0: Axis 1, 2 and 4 selected C0: Axis 3 and 4 selected D0: Axis 1, 3 and 4 selected E0: Axis 2, 3 and 4 selected
[Da.18] Parameter 1	Range of setting value	Set by "[Da.16] Condition operator".		Set by "[Da.16] Condition operator" and "[Da.23] Number of simultaneous starting axes".	Set by "[Da.16] Condition operator".	
[Da.19] Parameter 2	Range of setting value	Set by "[Da.16] Condition operator".		Set by "[Da.16] Condition operator" and "[Da.23] Number of simultaneous starting axes".	Set by "[Da.16] Condition operator".	

Changed functions (Continued)

Function	Description	Specification				
		QD77MS2	QD77MS4	QD77MS16	QD75MH2	QD75MH4
[Da.23] Number of simultaneous starting axes	New positioning data	No positioning data		2: 2 axes 3: 3 axes 4: 4 axes	No positioning data	
[Da.24] Simultaneous starting axis No.1 [Da.25] Simultaneous starting axis No.2 [Da.26] Simultaneous starting axis No.3	New positioning data	No positioning data		0: Axis 1 selected 1: Axis 2 selected 2: Axis 3 selected 3: Axis 4 selected 4: Axis 5 selected 5: Axis 6 selected 6: Axis 7 selected 7: Axis 8 selected 8: Axis 9 selected 9: Axis 10 selected A: Axis 11 selected B: Axis 12 selected C: Axis 13 selected D: Axis 14 selected E: Axis 15 selected F: Axis 16 selected	No positioning data	

Appendix 4.2 Differences with LD77MH models

(1) Differences of performance specifications

Item \ Model		QD77MS2	QD77MS4	QD77MS16	LD77MH4	LD77MH16
Number of control axes		2	4	16	4	16
Operation cycle [ms]		0.88/1.77			0.88	0.88/1.77
Starting time (1-axis linear)	Trapezoidal acceleration/ deceleration	0.88ms		1.77ms	0.88ms	1.77ms
	S-curve acceleration/ deceleration					
SSCNET communication		SSCNETⅢ/H or SSCNETⅢ			SSCNETⅢ	
Compatible servo amplifier		MR-J5-_B_/MR-J5W_-_B/MR-J5-_B_-RJ/ MR-J4-_B_/MR-J4W_-_B/MR-J4-_B_-RJ/ MR-J3-_B_/MR-J3W-_B/MR-J3-_B_-RJ006/ MR-J3-_BS_/MR-J3-_B_-RJ004/ MR-J3-_B-RJ080W/MR-JE-_B(F)			MR-J3-_B_/MR-J3W-_B/MR-J3-_B_-RJ006/ MR-J3-_BS_/MR-J3-_B_-RJ004/ MR-J3-_B-RJ080W (Note-1)	
Controlled servo parameter group	SSCNETⅢ/H	PA, PB, PC, PD, PE, PS, PF, Po, PL			—	
	SSCNETⅢ	PA, PB, PC, PD, PE, PS, PF, Po			PA, PB, PC, PD, PE, PS, PF (Note-1), Po (Note-1)	
Machine HPR function (HPR method)		6 types (Proximity dog method, Count method 1) 2), Data set method, Scale origin signal detection method, Driver HPR method)			5 types (Proximity dog method, Count method 1) 2), Data set method, Scale origin signal detection method)	
External signal selection function		External input signal of QD77MS (FLS, RLS, DOG, STOP, DI) / External input signal of servo amplifier (FLS, RLS, DOG) / external input signal via CPU (buffer memory : FLS, RLS, DOG)			External input signal of servo amplifier (FLS, RLS, DOG) / external input signal via CPU (buffer memory : FLS, RLS, DOG)	
Connection connector		A6CON1, A6CON4: Soldering type, Optional A6CON2: Crimp contact type, Optional			LD77MHIOCON: Soldering type	
Applicable wire size		A6CON1, A6CON4: 0.3mm^2 A6CON2: AWG28 to AWG24 (0.08 to 0.2 mm^2)			LD77MHIOCON: AWG30 to AWG24 (0.05 to 0.2 mm^2)	
5VDC internal current consumption [A]		0.6		0.75	0.55	0.70
Number of module occupied slots		1			2	
Outline dimensions [mm(inch)]		98.0(3.86) (H)×27.4(1.08) (W)×90.0(3.54) (D)			90.0(3.54) (H)×45.0(1.77) (W)×95.0(3.74) (D)	
Mass [kg]		0.15	0.16		0.22	
Saving area for servo parameter		Internal memory (nonvolatile)			Flash ROM	
Programming tool		GX Works2, MR Configurator2			GX Works2, MR Configurator2/ GX Developer, GX Configurator-QP (Note-1),	
Upper limit value of electronic gear setting range		(Note-2)			20000	

(Note-1): GX Configurator-QP does not support with a part of LD77MH4 function and LD77MH16.

(Note-2): The value varies depending on the product information as follows.

Before 150320000000000 : 20000,

150320000000000 or later: 320000

(2) Differences of function

(a) Added functions

Functions	Remarks
Driver HPR method	Refer to Appendix 6.3.
Driver communication function (SSCNETⅢ/H)	Refer to Section 14.9.
QD75MH initial value setting function	Refer to Section 14.14.
Servo amplifier command value error check function	Refer to Section 14.15.
Hot line forced stop function	Refer to Section 14.16.
Compatible with servo driver VCII series/VPH series manufactured by CKD NIKKI DENSO CO., LTD.	Refer to Appendix 6.1.
Compatible with inverter FR-A700 series	Refer to Appendix 6.2.
AlphaStep/5-phase stepping motor driver manufactured by ORIENTAL MOTOR Co., Ltd.	Refer to Appendix 6.3.
IAI electric actuator controller manufactured by IAI Corporation	Refer to Appendix 6.4.
Synchronous encoder via servo amplifier	Refer to "MELSEC-Q/L QD77MS/QD77GF/LD77MS/LD77MH Simple Motion Module User's Manual (Synchronous Control)".
Command generation axis	

(b) Changed functions

Function	Description	Specification				
		QD77MS2	QD77MS4	QD77MS16	LD77MH4	LD77MH16
Input signal [X0]	Signal name	READY			LD77 READY	
Driver communication function	Function name	Driver communication function			Master-slave operation function	
[Pr.7] Bias speed at start	Range of setting value	<Setting unit is PLS> 0 to 1000000000 [PLS/s]			<Setting unit is PLS> 0 to 50000000 [PLS/s]	
[Pr.8] Speed limit value	Range of setting value	<Control unit is PLS> 1 to 1000000000 [PLS/s]			<Control unit is PLS> 1 to 50000000 [PLS/s]	
[Pr.22] Input signal logic selection	Range of setting value	No limitation			b4: Only the value specified against the axis 1 is valid	
[Pr.24] Manual pulse generator /Incremental synchronous encoder input selection	Range of setting value	0: A-phase/B-phase multiplied by 4 1: A-phase/B-phase multiplied by 2 2: A-phase/B-phase multiplied by 1 3: PLS/SIGN			0: A-phase/B-phase multiplied by 4 2: A-phase/B-phase multiplied by 1 3: PLS/SIGN	
[Pr.31] JOG speed limit value	Range of setting value	<Control unit is PLS> 1 to 1000000000 [PLS/s]			<Control unit is PLS> 1 to 50000000 [PLS/s]	
[Pr.43] HPR method	Range of setting value	0: Proximity dog method 4: Count method 1) 5: Count method 2) 6: Data set method 7: Scale origin signal detection method 8: Driver HPR method			0: Proximity dog method 4: Count method 1) 5: Count method 2) 6: Data set method 7: Scale origin signal detection method	
[Pr.46] HPR speed	Range of setting value	<Control unit is PLS> 1 to 1000000000 [PLS/s]			<Control unit is PLS> 1 to 50000000 [PLS/s]	
[Pr.47] Creep speed	Range of setting value	<Control unit is PLS> 1 to 1000000000 [PLS/s]			<Control unit is PLS> 1 to 50000000 [PLS/s]	

Changed functions (Continued)

Function	Description	Specification				
		QD77MS2	QD77MS4	QD77MS16	LD77MH4	LD77MH16
[Pr.80] External input signal selection	Range of setting value	0: External input signal of QD77MS QD77MS2 QD77MS4 1: External input signal of servo amplifier 2: Buffer memory of QD77MS 3: External input signal 1 of QD77MS QD77MS16 4: External input signal 2 of QD77MS QD77MS16 5: External input signal 3 of QD77MS QD77MS16 6: External input signal 4 of QD77MS QD77MS16			1: External input signal of servo amplifier 2: Buffer memory of LD77MH	
[Pr.82] Forced stop valid/invalid selection	Range of setting value	0: Valid (External input signal) 1: Invalid 2: Valid (Buffer memory)			0: Valid 1: Invalid	
[Pr.89] Manual pulse generator/ Incremental synchronous encoder input type selection	Default value	1: Voltage-output/open-collector type			0: Differential-output type	
[Pr.91] Optional data monitor: Data type setting 1 [Pr.92] Optional data monitor: Data type setting 2 [Pr.93] Optional data monitor: Data type setting 3 [Pr.94] Optional data monitor: Data type setting 4	Range of setting value	0: No setting 1: Effective load ratio 2: Regenerative load ratio 3: Peak load factor ratio 4: Load inertia moment ratio 5: Model loop gain 6: Bus voltage 7: Servo motor speed 8: Encoder multiple revolution counter 9: Unit power consumption 10: Instantaneous torque 12: Servo motor thermistor temperature 13: Torque Equivalent to Disturbance 14: Overload alarm margin 15: Excessive error alarm margin 16: Settling time 17: Overshoot amount 18: Internal temperature of encoder 20: Position feedback 21: Encoder position within one revolution 22: Selected droop pulse 23: Unit total power consumption 24: Load-side encoder information 1 25: Load-side encoder information 2 26: Z-phase counter 27: Servo motor side/load-side position deviation 28: Servo motor side/load-side speed deviation 29: External encoder counter value 30: Unit power consumption (2 words) Most significant bit + Address value: Optional address of registered monitor			0: No setting 1: Effective load ratio 2: Regenerative load ratio 3: Peak load ratio 4: Load to motor inertia ratio 5: Position loop gain 1 6: Bus voltage 7: Servo motor speed 20: Position feedback 21: Encoder position within one revolution 22: Selected droop pulses	
[Pr.96] Operation cycle setting	Compatible model	0: 0.88ms 1: 1.77ms			No parameter setting	0: 0.88ms 1: 1.77ms
[Pr.97] SSCNET setting	New parameter	0: SSCNETⅢ 1: SSCNETⅢ/H			No parameter setting	

Changed functions (Continued)

Function	Description	Specification				
		QD77MS2	QD77MS4	QD77MS16	LD77MH4	LD77MH16
[Pr.114] External command signal compensation valid/invalid setting	New parameter	0: Invalid 1: Valid			No parameter setting	
[Pr.439] Cam axis length per cycle	Default value	4194304			262144	
[Pr.441] Cam stroke amount						
[Md.57] Servo alarm	New monitor data	The LED display details of servo amplifier detection alarm			No monitor data	
[Md.58] Servo warning	New monitor data	The LED display details of servo amplifier detection warning			No monitor data	
[Md.59] Module information	Storage value	1000H	1001H	1002H	0001H	0002H
[Md.61] Driver operation alarm number	New monitor data	Displays the driver operation alarm number.			No monitor data	
[Md.107] Parameter error No.	Range of monitor value	<SSCNETⅢ/H> 1 to 64 : PA01 to PA64 65 to 128 : PB01 to PB64 129 to 192: PC01 to PC64 193 to 256: PD01 to PD64 257 to 320: PE01 to PE64 321 to 384: PF01 to PF64 385 to 448: Po01 to Po64 449 to 512: PS01 to PS64 513 to 576: PL01 to PL64 <SSCNETⅢ> 1 to 18 : PA01 to PA18 19 to 63 : PB01 to PB45 64 to 95 : PC01 to PC32 96 to 127 : PD01 to PD32 128 to 167: PE01 to PE40 168 to 183: PF01 to PF16 184 to 199: Po01 to Po16 200 to 231: PS01 to PS32 232 : PA19			<SSCNETⅢ> 1 to 18 : PA01 to PA18 19 to 63 : PB01 to PB45 64 to 95 : PC01 to PC32 96 to 127 : PD01 to PD32 128 to 167: PE01 to PE40 168 to 183: PF01 to PF16 184 to 199: Po01 to Po16 200 to 231: PS01 to PS32 232 : PA19	
[Md.116] Encoder option information	New storage item	Compatible with continuous operation to torque control Compatible with scale measurement mode			No storage item	
[Md.132] Operation cycle setting	Compatible model	0: 0.88ms 1: 1.77ms			No monitor data	0: 0.88ms 1: 1.77ms
[Md.133] Operation cycle over flag	Compatible model	0: OFF 1: ON (Operation cycle over occurred.)			No monitor data	0: OFF 1: ON (Operation cycle over occurred.)
[Md.500] Servo status7	New monitor data	b9: Driver operation alarm			No monitor data	
[Md.502] Driver operation alarm number	New monitor data	Displays the driver operation alarm number.			No monitor data	
[Cd.14] New speed value	Range of setting value	<Control unit is PLS> 0 to 1000000000 [PLS/s]			<Control unit is PLS> 0 to 50000000 [PLS/s]	
[Cd.17] JOG speed	Range of setting value	<Control unit is PLS> 1 to 1000000000 [PLS/s]			<Control unit is PLS> 1 to 50000000 [PLS/s]	

Changed functions (Continued)

Function	Description	Specification				
		QD77MS2	QD77MS4	QD77MS16	LD77MH4	LD77MH16
[Cd.25] Position-speed switching control speed change register	Range of setting value	<Control unit is PLS> 0 to 1000000000 [PLS/s]			<Control unit is PLS> 0 to 50000000 [PLS/s]	
[Cd.28] Target position change value (New speed)	Range of setting value	<Control unit is PLS> 0 to 1000000000 [PLS/s]			<Control unit is PLS> 0 to 50000000 [PLS/s]	
[Cd.47] QD75MH initial value setting request	New control data	1: Requests QD75MH initial value setting			No control data	
[Cd.130] Servo parameter read/write request	Range of setting value	0000H : Not request (read/write completion) 0001H : 1 word write request 0002H : 2 words write request 0003H : Read/write failure 0022H : 2 words write request to internal memory 0032H : 2 words read request from internal memory Other than the above: Not request			1 : Write request Other than 1: Not request	
[Cd.131] Parameter No.	Range of setting value	<MR-J4(W)-B/MR-JE-B(F)> 0: PA group 1: PB group 2: PC group 3: PD group 4: PE group 5: PF group 9: Po group A: PS group B: PL group <MR-J5(W)-B> 0: PA group 1: PB group 2: PC group 3: PD group 4: PE group 5: PF group 7: PH group 8: PJ group 9: Po group A: PS group B: PL group D: PM group <VCII series/VPH series> 0: Group 0 1: Group 1 2: Group 2 3: Group 3 4: Group 4 5: Group 5 6: Group 6 7: Group 7 8: Group 8 9: Group 9			<MR-J3(W)-B> 0: PA group 1: PB group 2: PC group 3: PD group 4: PE group 5: PF group 9: Po group A: PS group	

Changed functions (Continued)

Function	Description	Specification				
		QD77MS2	QD77MS4	QD77MS16	LD77MH4	LD77MH16
[Cd.132] Change data	New control data	Set the change value of servo parameter set in "[Cd.131] Parameter No.".			No control data	
[Cd.140] Command speed at speed control mode	Range of setting value	<Control unit is PLS> -1000000000 to 1000000000 [PLS/s]			<Control unit is PLS> -50000000 to 50000000 [PLS/s]	
[Cd.146] Speed limit value at torque control mode	Range of setting value	<Control unit is PLS> 0 to 1000000000 [PLS/s]			<Control unit is PLS> 0 to 50000000 [PLS/s]	
[Cd.147] Speed limit value at continuous operation to torque control mode	Range of setting value	<Control unit is PLS> -1000000000 to 1000000000 [PLS/s]			<Control unit is PLS> -50000000 to 50000000 [PLS/s]	
[Cd.158] Forced stop input	New control data	0: Forced stop ON (Forced stop) 1: Forced stop OFF (Forced stop release)			No control data	
[Cd.802] Latch data range change request	New control data	1: Change in the next Operation cycle of the requested 2: Change in the next DI input of the requested			No control data	
[Da.8] Command speed	Range of setting value	<Control unit is PLS> 1 to 1000000000 [PLS/s]			<Control unit is PLS> 1 to 50000000 [PLS/s]	

Appendix 5 When using GX Works2

Use the "Simple Motion Module Setting Tool" for Simple Motion module various setting.
The following shows the procedure for positioning operation when GX Works2 is used.

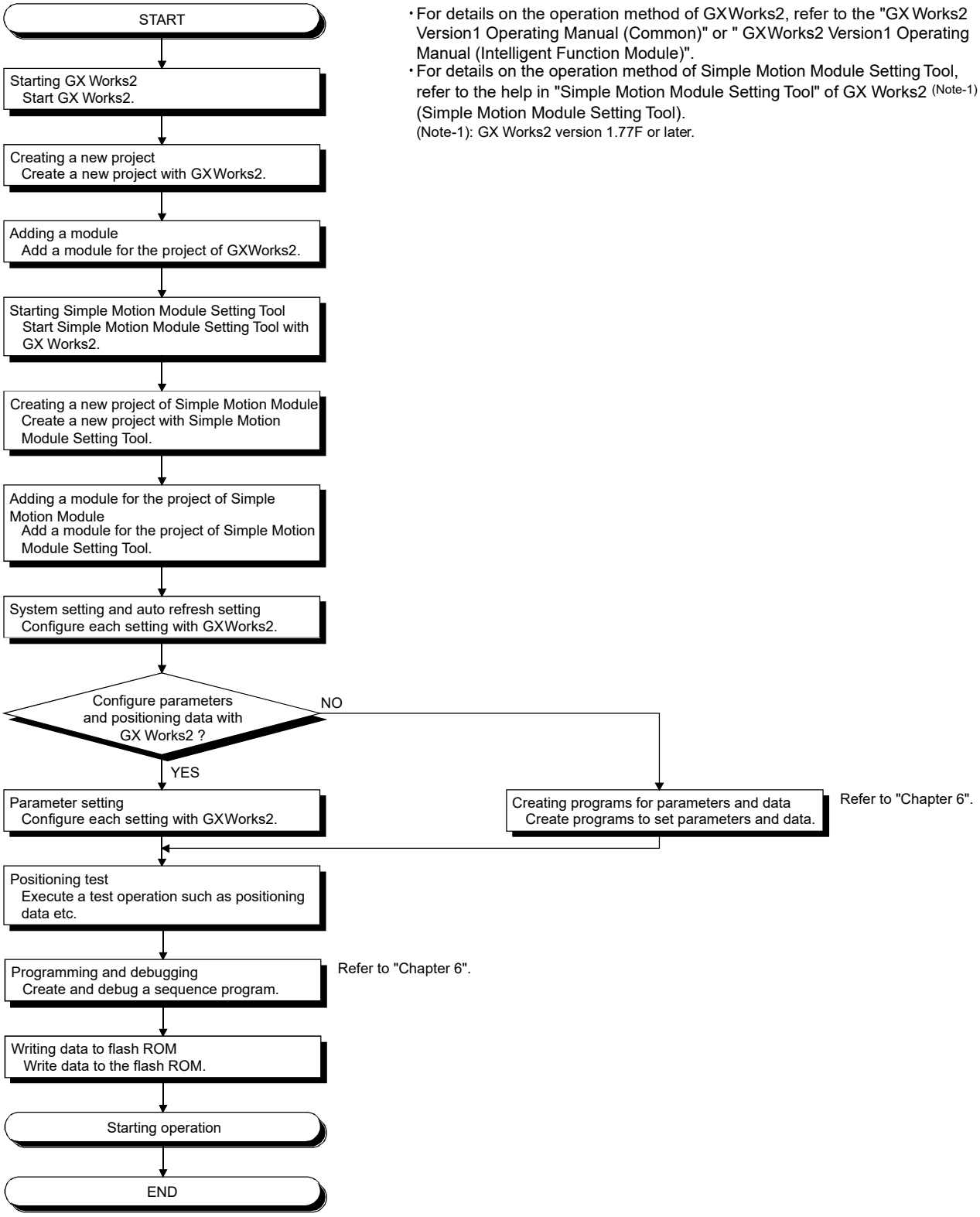

・For details on the operation method of GXWorks2, refer to the "GX Works2 Version1 Operating Manual (Common)" or " GXWorks2 Version1 Operating Manual (Intelligent Function Module)".
・For details on the operation method of Simple Motion Module Setting Tool, refer to the help in "Simple Motion Module Setting Tool" of GX Works2 (Note-1) (Simple Motion Module Setting Tool).
(Note-1): GX Works2 version 1.77F or later.

Appendix 6 Compatible devices with SSCNETⅢ (/H)

Appendix 6.1 Servo driver VCII series/VPH series manufactured by CKD NIKKI DENSO CO., LTD.

The direct drive τDISC/τiD roll/τServo compass/τLinear stages, etc. manufactured by CKD NIKKI DENSO CO., LTD. can be controlled by connecting with the servo driver VCII series/VPH series manufactured by the same company using SSCNETⅢ or SSCNETⅢ/H.
Contact to CKD NIKKI DENSO overseas sales office for details of VCII series/VPH series.
• Contact: CKD NIKKI DENSO CO., LTD.

The details shown below explain about the "Connection with VCII series/VPH series".
[1] Connecting method
[2] Comparisons of specifications with MR-J5(W)-B/MR-J4(W)-B/MR-J3(W)-B
[3] Precautions during control
[4] VCII series/VPH series detection error/warning

[1] Connecting method

(1) System configuration

The system configuration using VCII series/VPH series is shown below.

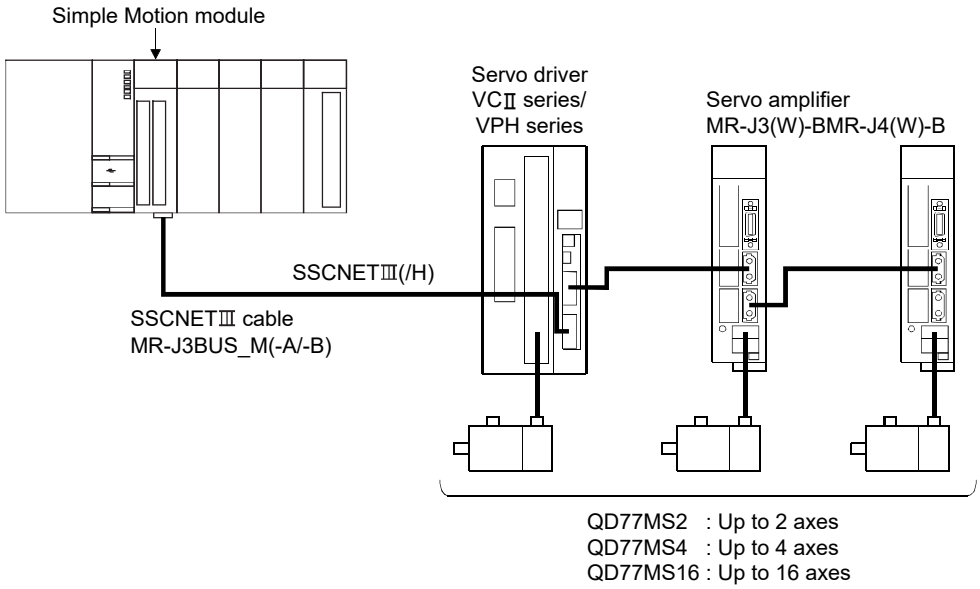

(2) Parameter setting

To connect VCII series/VPH series, set the following parameters.

Setting item		Setting value	Default value	Buffer memory address	
				QD77MS2 QD77MS4	QD77MS16
[Pr.100]	Servo series	96: VCII series (manufactured by CKD NIKKI DENSO CO., LTD.) 99: VPH series (manufactured by CKD NIKKI DENSO CO., LTD.)	0	30100+200n	28400+100n
PA03	Absolute position detection system	0: Disabled (incremental system) 1: Enabled (absolute position detection system)	0	30103+200n	28403+100n

n: Axis No.-1

POINT

- Parameters set in VCII series/VPH series are not controlled by Simple Motion module.
- When using VCII series, match the servo parameter "Absolute position detection system (PA03)" with the setting of VCII series. Otherwise, it does not operate correctly.

[2] Comparisons of specifications with MR-J5(W)-B/MR-J4(W)-B/MR-J3(W)-B

Item		VCII series/VPH series (Note-1)	MR-J5(W)-B/MR-J4(W)-B	MR-J3(W)-B
[Pr.100] Servo series		96: VCII series (manufactured by CKD NIKKI DENSO CO., LTD.) 99: VPH series (manufactured by CKD NIKKI DENSO CO., LTD.)	32: MR-J4-_B_(-RJ), MR-J4W_-_B (2-, 3- axis type) 128: MR-J5-_B_(-RJ), MR-J5W_-_B (2-, 3-axis type)	1: MR-J3-_B_, MR-J3W-_B (2-axis type) 3: MR-J3-_B_-RJ006 (For fully closed loop control) MR-J3-_BS_ (For safety servo) 4: MR-J3-_B_-RJ004 (For linear servo) 6: MR-J3-_B-RJ080W (For direct drive motor)
Control of servo amplifier parameters		Controlled by VCII series/VPH series. (Note-2)	Controlled by Simple Motion module.	
ABS/INC setting		Set by Simple Motion module. (Note-2) Set by VCII/VPH data editing software.	Set by Simple Motion module.	
Input filter setting		Setting is not available. (fixed to 0.88 ms)	Setting is available.	
Detailed parameter 1	[Pr.80] External input signal selection	External input signals of VCII series/VPH series are available.	External input signals of servo amplifier are available.	

Item		VCII series/VPH series (Note-1)	MR-J5(W)-B/MR-J4(W)-B	MR-J3(W)-B
Expansion parameter	[Pr.91] to [Pr.94] Optional data monitor: Data type setting	The following items can be monitored. 1: Effective load ratio 2: Regenerative load ratio 3: Peak load ratio 5: Position loop gain 6: Bus voltage (Note-3) 8: Encoder multiple revolution counter 20: Position feedback 21: Encoder position within one revolution -: Optional address of registered monitor	The following items can be monitored. 1: Effective load ratio 2: Regenerative load ratio 3: Peak load ratio 4: Load inertia moment ratio 5: Model loop gain 6: Bus voltage 7: Servo motor speed 8: Encoder multiple revolution counter 9: Unit power consumption 10: Instantaneous torque 12: Servo motor thermistor temperature 13: Torque Equivalent to Disturbance 14: Overload alarm margin 15: Excessive error alarm margin 16: Settling time 17: Overshoot amount 18: Internal temperature of encoder 20: Position feedback 21: Encoder position within one revolution 22: Selected droop pulse 23: Unit total power consumption 24: Load-side encoder information 1 25: Load-side encoder information 2 26: Z-phase counter 27: Servo motor side/load-side position deviation 28: Servo motor side/load-side speed deviation 30: Unit power consumption (2 words) -: Optional address of registered monitor	The following items can be monitored. 1: Effective load ratio 2: Regenerative load ratio 3: Peak load ratio 4: Load inertia moment ratio 5: Model loop gain 6: Bus voltage 7: Servo motor speed 8: Encoder multiple revolution counter 12: Servo motor thermistor temperature 20: Position feedback 21: Encoder position within one revolution 22: Selected droop pulse 24: Load-side encoder information 1 25: Load-side encoder information 2 -: Optional address of registered monitor
Absolute position system		Possible (Note-4)	Possible	
Unlimited length feed		Possible (Note-5)	Possible	
HPR method		Proximity dog method, Count method 1), 2), Data set method, Scale origin signal detection method		
Positioning control, Expansion control		Position control mode, Speed control mode, Torque control mode	Position control mode, Speed control mode, Torque control mode, Continuous operation to torque control mode	
Torque limit value change		Possible (Separate setting: Restrictions (Note-6))	Possible	
Gain switching command		Valid	Valid	
PI-PID switching command		VCII series: Valid VPH series: Invalid	Valid	

Item	VCII series/VPH series (Note-1)	MR-J5(W)-B/MR-J4(W)-B	MR-J3(W)-B
Control loop (semi/fully) switching command	Invalid	Valid when using servo amplifier for fully closed loop control	
Amplifier-less operation function	Possible (Note-7)	Possible	
Servo parameter change request	Possible (2 words write)	Possible (1 word write (Note-8))	
Driver communication	Not possible	Possible (Note-9)	
Monitoring of servo parameter error No.	Not possible	Possible	
Servo alarm/warning (Error history/warning history)	Alarm codes/warning codes detected by VCII series/VPH series are stored in "Servo alarm/warning".	Alarm codes/warning codes detected by servo amplifier are stored in "Servo alarm/warning".	
Programming tool	Test mode is available. MR Configurator2 is not available. Use VCII/VPH data editing software.	Test mode is available. MR Configurator2 is available.	

(Note-1): Confirm the specifications of VCII series/VPH series for details.

(Note-2): Match the absolute position detection system setting in each setting of VCII series and Simple Motion module.

(Note-3): It can be monitored when using VPH series.

(Note-4): The direct drive τDISC series manufactured by CKD NIKKI DENSO CO., LTD. can restore the absolute position in the range from -2147483648 to 2147483647. Confirm the specifications of VCII series/VPH series for restrictions by the version of VCII series/VPH series.

(Note-5): When using the virtual encoder pulse number function of VCII series/VPH series, the unlimited length feed is available. When this function is not used, the unlimited length feed is not available. Confirm the specifications of VCII series/VPH series for details of this function.

(Note-6): The specification of torque limit direction differs by the version of VCII series/VPH series. Confirm the specifications of VCII series/VPH series for details.

(Note-7): During the amplifier-less operation, the following types of servo amplifier and servo motor are pseudo-connected.

For SSCNETⅢ connection

Servo amplifier type: MR-J3-10B

Motor type: HF-KP053 (Resolution per servo motor rotation: 262144 pulses/rev)

For SSCNETⅢ/H connection

Servo amplifier type: MR-J4-10B

Motor type: HG-KR053 (Resolution per servo motor rotation: 4194304 pulses/rev)

(Note-8): For MR-J5(W)-B, 2 words write is possible.

(Note-9): Refer to the instruction manual or manual of each servo amplifier for the servo amplifiers that can be used.

[3] Precautions during control

(1) Absolute position system (ABS)/Incremental system (INC)

The ABS/INC setting is performed by the connected VCII series/VPH series.

(2) Unlimited length feed

When using the virtual encoder pulse number function of VCII series/VPH series, the unlimited length feed is available. When this function is not used, the servo alarm 61468 (F01CH) "Absolute encoder over flow error" occurs after "Encoder multiple revolution counter × Encoder resolution + Encoder position within one revolution" exceeds the range of -2147483648 to 2147483647, and the operation stops.

(3) HPR

When "1" is set in the first digit of the parameter of VCII series "Select function for SSCNETⅢ on communicate mode", it is possible to carry out the home position return (HPR) without passing the zero point. (Return to origin after power is supplied will be executed when passing of Motor Z-phase is not necessary.) When "0" is set, the error "HPR zero point not passed" (error code: 210) occurs because the HPR is executed without passing the motor Z-phase (Motor reference position signal).

When "Zero return operation allowed." is set in the parameter of VPH series "Marker transit selection", it is possible to carry out the HPR without passing the Motor Z-phase after power is supplied. When "Zero return operation allowed after the marker is passed." is set, the error "HPR zero point not passed" (error code: 210) occurs because the HPR is executed without passing the motor Z-phase.

(4) Control mode

Control modes that can be used are shown below.

- Position control mode (speed control including position control and position loop)
- Speed control mode (speed control not including position loop)
- Torque control mode (torque control)

However, it is not available to switch to continuous operation to torque control mode of expansion control "Speed-torque control". If the mode is switched to continuous operation to torque control mode, the error "Continuous operation to torque control not supported" (error code: 550) occurs and the operation stops.

"1: Feedback torque" cannot be set in "Torque initial value selection (b4 to b7)" of "[Pr.90] Operation setting for speed-torque control mode". If it is set, the warning "Torque initial value selection invalid" (warning code: 521) occurs and the command value immediately after switching is the same as the case of selecting "0: Command torque".

(5) Servo parameter

(a) Control of servo parameters

Parameters of VCII series/VPH series are not controlled by Simple Motion module. Therefore, even though the parameter of VCII series/VPH series is changed during the communication between Simple Motion module and VCII series/VPH series, it does not reflect to the buffer memory of the Simple Motion module.

(b) Servo parameter change request

Change request of servo parameter ("[Cd.130] Servo parameter read/write request" to "[Cd.132] Change data") can be executed. However, the servo parameter of VCII series/VPH series is controlled in a unit of 2 words, so that it is necessary to set "0002H: 2 words write request" in "[Cd.130] Servo parameter read/write request" for executing the parameter write. If 1 word write is executed to VCII series/VPH series, the parameter write fails, and "0003H: Read/write failure" is stored in "[Cd.130] Servo parameter read/write request".

When the servo parameter of VCII series/VPH series is changed by the servo parameter change request, the parameter value after changing the servo parameter cannot be confirmed using VCII/VPH data editing software. Also, when the power of VCII series/VPH series is turned OFF, the parameter changed by the servo parameter change request becomes invalid, and the value written by VCII/VPH data editing software becomes valid.

(6) Optional data monitor

The following table shows data types that can be set.

Data type	Unit
Effective load ratio	[%]
Regenerative load ratio	[%]
Peak load ratio	[%]
Model loop gain	[rad/s]
Bus voltage (Note)	[V]
Encoder multiple revolution counter	[rev]
Position feedback (Used point: 2 words)	[PLS]
Encoder position within one revolution (Used point: 2 words)	[PLS]

(Note): It can be monitored when using VPH series.

(7) Gain switching command, PI-PID switching request, Semi/Fully closed loop switching request

Gain switching command and PI-PID switching request are available. Semi/fully closed loop switching request becomes invalid.

(8) Driver communication

The driver communication is not supported. If the driver communication is set in a servo parameter, the error "Driver communication setting error" (error code: 975) will occur when the power is turned ON, and any servo amplifiers including VCII series/VPH series cannot be connected.

[4] VCII series/VPH series detection error/warning

(1) Error

When an error occurs on VCII series/VPH series, the error detection signal turns ON, and the error code (61440 to 61695) is stored in "[Md.23] Axis error No.". The servo alarm (0x00 to 0xFF) of VCII series/VPH series is stored in "[Md.114] Servo alarm" and "[Md.57] Servo alarm" in error history. The alarm detail number is not stored. However, "0" is always stored in "[Md.107] Parameter error No.".

Confirm the specifications of VCII series/VPH series for details.

(2) Warning

When a warning occurs on VCII series/VPH series, the warning code (61440 to 61695) is stored in "[Md.24] Axis warning No.".
The servo warning No. of VCII series/VPH series is stored in "[Md.58] Servo warning" in warning history.

Confirm the specifications of VCII series/VPH series for details.

Appendix 6.2 Inverter FR-A700 series

FR-A700 series can be connected via SSCNETⅢ by using built-in option FR-A7AP and FR-A7NS.

The details shown below explain about the "Connection with FR-A700 series".

[1] Connecting method

[2] Comparisons of specifications with MR-J3(W)-B

[3] Precautions during control

[4] FR-A700 series detection error/warning

[1] Connecting method

(1) System configuration

The system configuration using FR-A700 series is shown below.

Set "0: SSCNETⅢ" in "[Pr.97] SSCNET setting" to use FR-A700 series.

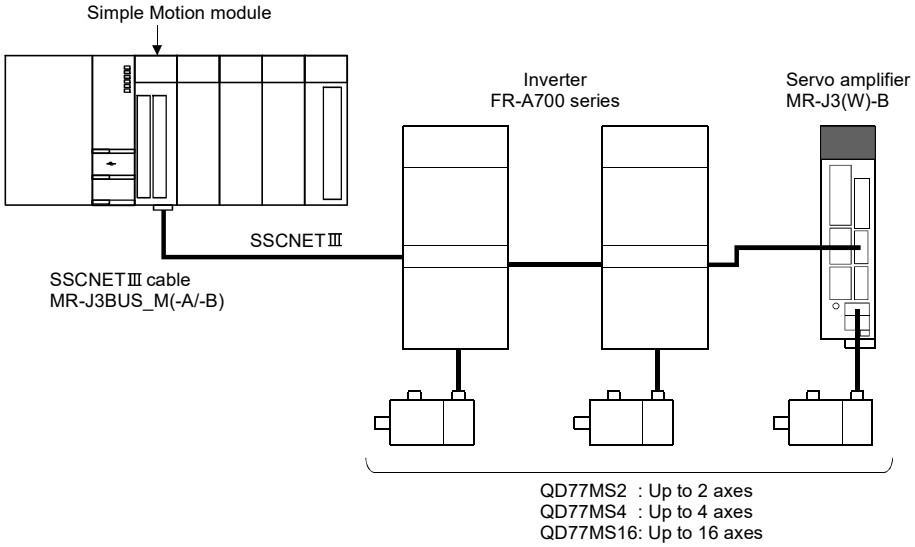

(2) Parameter setting

To connect FR-A700 series, execute flash ROM writing after setting the following parameters to buffer memory. The setting value is valid when the power supply is turned ON or the PLC CPU is reset.

"[Pr.97] SSCNET setting": "0: SSCNETⅢ"

"[Pr.100] Servo series" : "64: FR-A700 series (Inverter)"

(3) Control of FR-A700 series parameters

Parameters set in FR-A700 series are not controlled by Simple Motion module. Set the parameters by connecting FR-A700 series directly with the operation panel on the front of inverter (FR-DU07/FR-PU07) or FR Configurator that is inverter setup software. Confirm the instruction manual of FR-A700 series for details of the setting items.

POINT

In the state of connecting between FR-A700 series and Simple Motion module, only a part of parameters can be set if the parameter of the inverter "[Pr.77] Parameter write selection" is in the initial state. Set "2: Write parameters during operation" to rewrite the parameters of FR-A700 series.

(4) Reset selection/disconnected PU detection/PU stop selection

When PU stop is executed in FR-A700 series, position error excessive, etc. occur because a command from Simple Motion module does not stop. Set "0 to 3" in the parameter of the inverter "[Pr.75] Reset selection/ disconnected PU detection/PU stop selection". To stop FR-A700 series, use the stop signal and the forced stop of Simple Motion module, or use the output stop (MRS) of FR-A700 series.

Setting item		Default value	Setting value	Details
[Pr.75]	Reset selection/ disconnected PU detection/ PU stop selection	14	0	• Reset input is always enabled. • If the PU is disconnected, operation will be continued. • PU stop is disabled at SSCNETⅢ connection.
			1	• A reset can be input only when the protective function is activated. • If the PU is disconnected, operation will be continued. • PU stop is disabled at SSCNETⅢ connection.
			2	• Reset input is always enabled. • When the PU is disconnected, the inverter trips. • PU stop is disabled at SSCNETⅢ connection.
			3	• A reset can be input only when the protective function is activated. • When the PU is disconnected, the inverter trips. • PU stop is disabled at SSCNETⅢ connection.
			14	• Reset input is always enabled. • If the PU is disconnected, operation will be continued. • Deceleration stop by PU stop in any operation mode.
			15	• A reset can be input only when the protective function is activated. • If the PU is disconnected, operation will be continued. • Deceleration stop by PU stop in any operation mode.
			16	• Reset input is always enabled. • When the PU is disconnected, the inverter trips. • Deceleration stop by PU stop in any operation mode.
			17	• A reset can be input only when the protective function is activated. • When the PU is disconnected, the inverter trips. • Deceleration stop by PU stop in any operation mode.

(Note): Note that the default value is set to "14". (Change the value to "1 to 3".)

(5) In-position range

Set the servo parameter "In-position range (PA10)" and the parameter of the inverter "[Pr.426] In-position width" to be matched. Otherwise, it may not operate correctly.

Setting item		Default value	Setting range	Buffer memory address	
				QD77MS2 QD77MS4	QD77MS16
PA10	In-position range	100 (PLS)	0 to 65535 (PLS)	30110+200n	28410+100n

n: Axis No.-1

Setting item		Default value	Setting range	Details
[Pr.426]	In-position width	100 (PLS)	0 to 32767 (PLS)	When droop pulses have fallen below the setting value, the in-position signal turns ON.

(6) Optional data monitor setting

The following table shows data types that can be set.

Data type	Name at FR-A700 series use
Effective load ratio	Motor load factor
Load inertia moment ratio	Load inertia ratio
Model loop gain	Position loop gain
Bus voltage	Converter output voltage
Encoder multiple revolution counter	Encoder multiple revolution counter
Position feedback	Position feedback
Encoder position within one revolution	Encoder position within one revolution
Optional address of registered monitor	—

POINT

When FR-A700 series is used, each data is delayed for "update delay time + communication cycle" because of the update cycle of the inverter. The following table shows the update delay time of each data.

Data type	Update delay time of FR-A700 series
Effective load ratio	12.5ms
Load inertia moment ratio	56ms or more (up to 2500ms)
Model loop gain	56ms or more (up to 2500ms)
Bus voltage	9.888ms
Encoder multiple revolution counter	222μs
Position feedback	222μs
Encoder position within one revolution	222μs

(7) External input signal

Set as the followings to fetch the external input signal (FLS/RLS/DOG) via FR-A700 series.

• Set "1: External input signal of servo amplifier" in "[Pr.80] External input signal selection".

• Set the parameters of the inverter as below.
(Otherwise, each signal remains OFF.)

Setting item		Default value	Setting value	Details
[Pr.178]	STF terminal function selection	60	60	Use with the default value.
[Pr.179]	STR terminal function selection	61	61	Use with the default value.
[Pr.185]	JOG terminal function selection	5	76	Set 76 (Proximity dog).
[Pr.449]	SSCNETⅢ input filter setting	4	0: None 1: 0.88ms 2: 1.77ms 3: 2.66ms 4: 3.55ms	Set the input filter setting value at reading an external signal.

• Set the servo parameter of Simple Motion module "Input filter setting (PD11)" to be the same value as the parameter of the inverter "[Pr.449] SSCNETⅢ input filter setting".

Setting item		Default value	Setting value	Details
PD11	Input filter setting	4	0: None 1: 0.88ms 2: 1.77ms 3: 2.66ms 4: 3.55ms	Set the input filter setting value at reading an external signal.

[2] Comparisons of specifications with MR-J3(W)-B

Item		FR-A700 series (Note-1)	MR-J3(W)-B
[Pr.100] Servo series		64: FR-A700 series (Inverter)	1: MR-J3-_B_, MR-J3W-_B (2-axis type)
Control of servo amplifier parameters		Set directly by inverter. (Not controlled by Simple Motion module.)	Controlled by Simple Motion module.
Detailed parameter 1	[Pr.80] External input signal selection	External input signals of FR-A700 series are available.	External input signals of servo amplifier are available.
Expansion parameter	[Pr.91] to [Pr.94] Optional data monitor: Data type setting	The following items can be monitored. 1: Motor load factor 4: Load inertia ratio 5: Position loop gain 6: Converter output voltage 8: Encoder multiple revolution counter 20: Position feedback 21: Encoder position within one revolution -: Optional address of registered monitor	The following items can be monitored. 1: Effective load ratio 2: Regenerative load ratio 3: Peak load ratio 4: Load inertia moment ratio 5: Model loop gain 6: Bus voltage 7: Servo motor speed 8: Encoder multiple revolution counter 12: Servo motor thermistor temperature 20: Position feedback 21: Encoder position within one revolution 22: Selected droop pulse 24: Load-side encoder information 1 25: Load-side encoder information 2 -: Optional address of registered monitor
Absolute position system		Not possible	Possible
Positioning control, Expansion control		Position control mode, Speed control mode, Torque control mode	Position control mode, Speed control mode, Torque control mode, Continuous operation to torque control mode
Gain switching command		Valid	Valid
PI-PID switching command		Valid	Valid
Control loop (semi/fully) switching command		Invalid	Valid when using servo amplifier for fully closed loop control (MR-J3-_B_-RJ006)
Servo parameter write/read		Not possible	Possible
Amplifier-less operation function		Possible (Note-2)	Possible
		(Operates artificially as the followings during amplifier-less operation. Servo amplifier type: MR-J3-10B, Motor type: HF-KP053 (resolution per servomotor rotation: 262144 pulses/rev))	
Driver communication		Not possible	Possible (Note-3)
Monitoring of servo parameter error No.		Not possible	Possible
Servo alarm/warning (Error history/warning history)		Error codes/warning codes detected by FR-A700 series are stored in "Servo alarm/warning".	Alarm codes/warning codes detected by servo amplifier are stored in "Servo alarm/warning".
Programming tool		MR Configurator2 is not available. Use FR-DU07/FR-PU07 or FR Configurator.	MR Configurator2 is available.

(Note-1): Confirm the specifications of FR-A700 series for details.

(Note-2): Parameters set in FR-A700 series are not controlled by Simple Motion module. Therefore, the operation is the same as when the servo parameter "Rotation direction selection/travel direction selection (PA14)" is set as below during amplifier-less operation mode.

Setting item		Setting value	Details
PA14	Rotation direction selection/travel direction selection	0	Positioning address increase: CCW or positive direction
			Positioning address decrease: CW of negative direction

(Note-3): Refer to each servo amplifier instruction manual for the servo amplifiers that can be used.

[3] Precautions during control

(1) Absolute position system (ABS)/Incremental system (INC)

When using FR-A700 series, absolute position system (ABS) cannot be used. Even though "1: Enable (absolute position detection system)" is set in the servo parameter "Absolute position detection system (PA03)", the servo amplifier operates as incremental system.

- When the Simple Motion module is powered ON, HPR request is turned ON and the command position value is set to 0. (The command position value is set to 0 even if only the power of inverter is turned OFF to ON.)
- Errors at absolute position system (1201 to 1205) are not detected.

(2) Control mode

Control modes that can be used are shown below.

- Position control mode (speed control including position control and position loop)
- Speed control mode (speed control not including position loop)
- Torque control mode (torque control)

However, it is not available to switch to continuous operation to torque control mode of expansion control "Speed-torque control". If the mode is switched to continuous operation to torque control mode, the error "Continuous operation to torque control not supported" (error code: 550) occurs and the operation stops.

"1: Feedback torque" cannot be set in "Torque initial value selection (b4 to b7)" of "[Pr.90] Operation setting for speed-torque control mode". If it is set, the warning "Torque initial value selection invalid" (warning code: 521) occurs and the command value immediately after switching is the same as the case of selecting "0: Command torque".

(3) Driver communication

The driver communication is not supported. If the driver communication is set in a servo parameter, the error "Driver communication setting error" (error code: 975) will occur when the power is turned ON.

(4) Control mode switching of speed-torque control

The axis connected with FR-A700 series takes more time to switch the control mode than the axis connected with the servo amplifier.

Switching operation	Switching time at the servo amplifier use	Switching time at FR-A700 series use
Position control mode → Speed control mode	6 to 11ms	19 to 24ms
Speed control mode → Position control mode		
Position control mode → Torque control mode		
Torque control mode → Position control mode		
Speed control mode → Torque control mode		
Torque control mode → Speed control mode		

[4] FR-A700 series detection error/warning

(1) Error

When an error occurs on FR-A700 series, the error code (61696 to 61951) is stored in "[Md.23] Axis error No.". The alarm No. of FR-A700 series is stored in "[Md.114] Servo alarm" and "[Md.57] Servo alarm" in error history. However, "0" is always stored in "[Md.107] Parameter error No." and "Absolute position lost (b14)" of "[Md.108] Servo status".

The detection error list for FR-A700 series is shown below.
Confirm the instruction manual of FR-A700 series for details.

Classification of errors	Error code	Alarm No. of FR-A700 series	FR-A700 series LED display	Name	Remarks
Inverter FR-A700 series	61712 (F110H)	10H	E.OC1	Overcurrent trip during acceleration	
	61713 (F111H)	11H	E.OC2	Overcurrent trip during constant speed	
	61714 (F112H)	12H	E.OC3	Overcurrent trip during deceleration or stop	
	61715 (F113H)	13H	E.OV1	Regenerative overvoltage trip during acceleration	
	61716 (F114H)	14H	E.OV2	Regenerative overvoltage trip during constant speed	
	61717 (F115H)	15H	E.OV3	Regenerative overvoltage trip during deceleration or stop	
	61718 (F116H)	16H	E.THM	Motor overload trip (electronic thermal relay function)	
	61719 (F117H)	17H	E.THT	Inverter overload trip (electronic thermal relay function)	
	61720 (F118H)	18H	E.IPF	Instantaneous power failure	
	61721 (F119H)	19H	E.UVT	Undervoltage	
	61728 (F120H)	20H	E.BE	Brake transistor alarm detection	
	61729 (F121H)	21H	E.GF	Output side earth (ground) fault overcurrent	
	61730 (F122H)	22H	E.OHT	External thermal relay operation	
	61731 (F123H)	23H	E.OLT	Stall prevention stop	
	61732 (F124H)	24H	E.OPT	Option fault	
	61735 (F127H)	27H	E.PE	Parameter storage device fault	
	61736 (F128H)	28H	E.PUE	PU disconnection	
	61737 (F129H)	29H	E.RET	Retry count excess	Not be output when using FR-A7NS.
	61744 (F130H)	30H	E.CPU	CPU fault	
	61745 (F131H)	31H	E.ILF	Input phase loss	
	61746 (F132H)	32H	E.FIN	Heatsink overheat	
	61747 (F133H)	33H	E.OS	Overspeed occurrence	
	61748 (F134H)	34H	E.OSD	Speed deviation excess detection	
	61749 (F135H)	35H	E.ECT	Signal loss detection	
	61750 (F136H)	36H	E.OD	Excessive position fault	

Classification of errors	Error code	Alarm No. of FR-A700 series	FR-A700 series LED display	Name	Remarks
Inverter FR-A700 series	61752 (F138H)	38H	E.MB1	Brake sequence fault	Not be output when using FR-A7NS.
	61753 (F139H)	39H	E.MB2		
	61760 (F140H)	40H	E.MB3		
	61761 (F141H)	41H	E.MB4		
	61762 (F142H)	42H	E.MB5		
	61763 (F143H)	43H	E.MB6		
	61764 (F144H)	44H	E.MB7		
	61765 (F145H)	45H	E.P24	24VDC power output short circuit	
	61766 (F146H)	46H	E.CTE	Operation panel power supply short circuit, RS-485 terminal power supply short circuit	
	61767 (F147H)	47H	E.LF	Output phase loss	
	61768 (F148H)	48H	E.PTC	PTC thermistor operation	
	61769 (F149H)	49H	E.PE2	Parameter storage device fault	
	61776 (F150H)	50H	E.CDO	Output current detection value exceeded	
	61777 (F151H)	51H	E.IOH	Inrush current limit circuit fault	
	61778 (F152H)	52H	E.SER	Communication fault (inverter)	
	61779 (F153H)	53H	E.AIE	Analog input fault	
	61781 (F155H)	55H	E.USB	USB communication fault	
	61782 (F156H)	56H	E.1	Option fault	
	61783 (F157H)	57H	E.2		
	61784 (F158H)	58H	E.3		
	61792 (F160H)	60H	E.5	CPU fault	
	61793 (F161H)	61H	E.6		
	61794 (F162H)	62H	E.7		
	61798 (F166H)	66H	E.11	Opposite rotation deceleration fault	
	61800 (F168H)	68H	E.13	Internal circuit fault	
	61808 (F170H)	70H	E.EP	Encoder phase fault	
	61840 (F190H)	90H	E.OP3	Communication option fault	
	61841 (F191H)	91H	E.OP3		
	61842 (F192H)	92H	E.OP3		
	61843 (F193H)	93H	E.OP3		
	61951 (F1FFH)	—	E.OP3	Internal circuit fault	

(2) Warning

When a warning occurs on FR-A700 series, the warning code (61696 to 61951) is stored in "[Md.24] Axis warning No.". The warning No. of FR-A700 series is stored in "[Md.114] Servo alarm" and "[Md.58] Servo warning" in warning history.

The detection warning list for FR-A700 series is shown below.
Confirm the instruction manual of FR-A700 series for details.

Classification of warnings	Warning code	Warning No. of FR-A700 series	FR-A700 series LED display	Name	Remarks
Inverter FR-A700 series	61924 (F1E4H)	E4H	—	Parameter write error	
	61926 (F1E6H)	E6H	—	Output stop	
	61927 (F1E7H)	E7H	—	Emergency stop	
	61936 (F1F0H)	F0H	OL	Stall prevention (overcurrent)	
	61937 (F1F1H)	F1H	oL	Stall prevention (overvoltage)	
	61938 (F1F2H)	F2H	PS	PU stop	
	61939 (F1F3H)	F3H	RB	Regenerative brake pre-alarm	
	61940 (F1F4H)	F4H	TH	Electronic thermal relay function pre-alarm	
	61941 (F1F5H)	F5H	MT	Maintenance signal output	
	61942 (F1F6H)	F6H	CP	Parameter copy	
	61943 (F1F7H)	F7H	SL	Speed limit indication (Output during speed limit)	
	61944 (F1F8H)	F8H	Fn	Fan alarm	

Appendix 6.3 AlphaStep/5-phase stepping motor driver manufactured by ORIENTAL MOTOR Co., Ltd.

The ORIENTAL MOTOR Co., Ltd. made stepping motor driver AlphaStep/5-phase can be connected via SSCNETⅢ/H.
For details of stepping motor driver, please contact your nearest Oriental Motor branch or sales office.

The details shown below explain about the "Connection with AlphaStep/5-phase".

[1] Connecting method

[2] Comparisons of specifications with MR-J5(W)-B/MR-J4(W)-B

[3] Precautions during control

[4] AlphaStep/5-phase detection error/warning

[1] Connecting method

(1) System configuration

The system configuration using AlphaStep/5-phase is shown below.

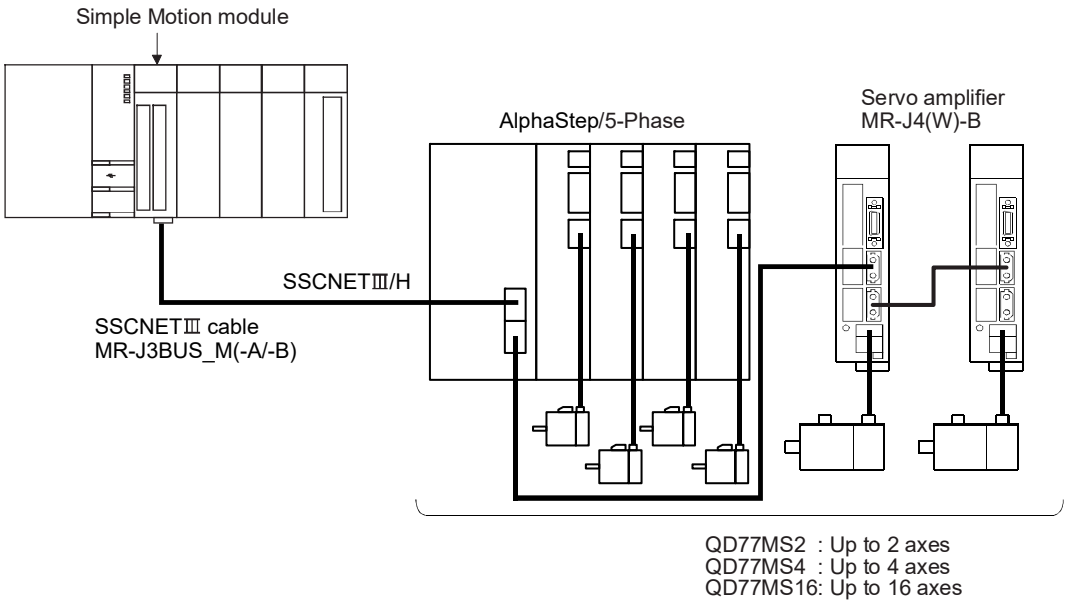

(2) Parameter setting

To connect AlphaStep/5-phase, set the following parameters.

Setting item		Setting value	Default value	Buffer memory address	
				QD77MS2 QD77MS4	QD77MS16
[Pr.100]	Servo series	97: AlphaStep/5-Phase (manufactured by ORIENTAL MOTOR Co., Ltd.)	0	30100+200n	28400+100n

n: Axis No.-1

POINT

All the stepping motor driver axes that can be connected need to be set in the system setting regardless of the number of stepping motors.
(For example, when a 2-axis unit is used and only 1 motor is connected, the settings for two axes are required in the system setting.)
Parameters set in AlphaStep/5-phase are not controlled by the Simple Motion module.

[2] Comparisons of specifications with MR-J5(W)-B/MR-J4(W)-B

Item		AlphaStep/5-Phase	MR-J5(W)-B/MR-J4(W)-B
[Pr.100] Servo series		97: AlphaStep/5-Phase (manufactured by ORIENTAL MOTOR Co., Ltd.)	32: MR-J4-_B_(-RJ), MR-J4W_-_B (2-, 3- axis type) 128: MR-J5-_B_(-RJ), MR-J5W_-_B (2-, 3-axis type)
Control of servo amplifier parameters		Controlled by AlphaStep/5-phase.	Controlled by Simple Motion module.
Detailed parameter 1	[Pr.80] External input signal selection	External input signals of AlphaStep/5-phase are available.	External input signals of servo amplifier are available.
Expansion parameter	[Pr.91] to [Pr.94] Optional data monitor: Data type setting	The following items can be monitored. 8: Encoder multiple revolution counter 20: Position feedback 21: Encoder position within one revolution 29: External encoder counter value -: Optional address of registered monitor	The following items can be monitored. 1: Effective load ratio 2: Regenerative load ratio 3: Peak load ratio 4: Load inertia moment ratio 5: Model loop gain 6: Bus voltage 7: Servo motor speed 8: Encoder multiple revolution counter 9: Unit power consumption 10: Instantaneous torque 12: Servo motor thermistor temperature 13: Torque Equivalent to Disturbance 14: Overload alarm margin 15: Excessive error alarm margin 16: Settling time 17: Overshoot amount 18: Internal temperature of encoder 20: Position feedback 21: Encoder position within one revolution 22: Selected droop pulse 23: Unit total power consumption 24: Load-side encoder information 1 25: Load-side encoder information 2 26: Z-phase counter 27: Servo motor side/load-side position deviation 28: Servo motor side/load-side speed deviation 30: Unit power consumption (2 words) -: Optional address of registered monitor
Absolute position system		AlphaStep: Possible 5-Phase: Not possible	Possible
Unlimited length feed		Possible	Possible
HPR method		Count method 2), Data set method, Driver HPR method	Proximity dog method, Count method 1), 2), Data set method, Scale origin signal detection method
Positioning control, Expansion control		Position control mode	Position control mode, Speed control mode, Torque control mode, Continuous operation to torque control mode
Gain switching command		Invalid	Valid
PI-PID switching command		Invalid	Valid
Control loop (semi/fully) switching command		Invalid	Valid when using servo amplifier for fully closed loop control

Item	AlphaStep/5-Phase	MR-J5(W)-B/MR-J4(W)-B
Amplifier-less operation function	Not possible (Note-1)	Possible (Note-2)
Servo parameter change request	Possible	Possible (1 word write (Note-3))
Driver communication	Not possible	Possible
Monitoring of servo parameter error No.	Not possible	Possible
Servo alarm/warning (Error history/warning history)	Alarm codes/warning codes detected by AlphaStep/5-phase and operation error codes during driver HPR method are stored in "Servo alarm/warning".	Alarm codes/warning codes detected by servo amplifier are stored in "Servo alarm/warning".
[Md.108] Servo status	High-order buffer memory address b0: READY ON b1: Servo ON b7: Servo alarm b12: In-position b13: Current cutback b14: Absolute position lost	High-order buffer memory address b0: READY ON b1: Servo ON b2, b3: Control mode b4: Gain switching b5: Fully closed loop control switching b7: Servo alarm b12: In-position b13: Torque limit b14: Absolute position lost b15: Servo warning Low-order buffer memory b0: Zero point pass b3: Zero speed b4: Speed limit b8: PID control
[Md.500] Servo status7	b9: Driver operation alarm	—
Programming tool	Test mode is available. MR Configurator2 is not available. Use AlphaStep/5-phase data editing software.	Test mode is available. MR Configurator2 is available.
Servo input axis type	Setting possible (Restrictions (Note-4))	Setting possible

(Note-1): Set as the unconnected status during amplifier-less operation.

(Note-2): During the amplifier-less operation, the following types of servo amplifier and servo motor are pseudo-connected.

For MR-J4(W)-B

Servo amplifier type: MR-J4-10B

Motor type: HG-KR053 (Resolution per servo motor rotation: 4194304 pulses/rev)

For MR-J5(W)-B

Servo amplifier type: MR-J5-10B

Motor type: Rotary servo motor (Resolution per servo motor rotation: 4194304 pulses/rev)

(Note-3): For MR-J5(W)-B, 2 words write is possible.

(Note-4): When using absolute position system (ABS), "3: Servo command value" or "4: Feedback value" in servo input axis type cannot be used. If it is set, the current value of the servo input axis might be not restored correctly. Therefore, set "1: Command position value" or "2: Actual position value" before using.

[3] Precautions during control

(1) Absolute position system (ABS)/Incremental system (INC)

The ABS/INC setting is performed by the connected AlphaStep/5-phase.

For the INC setting, the restriction is shown below.

• When the power of the Simple Motion module is turned OFF and ON again, "[Md.20] Command position value" is undefined.

(2) HPR

The method and some operation of the HPR using AlphaStep/5-phase differ from those of the HPR using the servo amplifier.

(a) HPR method that can be used

[Pr.43] HPR method	Possible/Not possible
Proximity dog method	×*1
Count method 1)	×*1
Count method 2)	○
Data set method	○
Scale origin signal detection method	×*1
Driver HPR method	○

○: Possible ×: Not possible

*1: The error "HPR method invalid" (error code: 232) occurs and HPR is not performed.

(b) Driver HPR method

The following shows an operation outline of the HPR method "Driver HPR method".

The HPR is executed based on the positioning pattern set in AlphaStep/5-phase. Set the setting values of HPR in the parameters of AlphaStep/5-phase. The operation of HPR and "b0: Lower limit", "b1: Upper limit" and "b6: Proximity dog signal" of "[Pr.22] Input signal logic selection" depend on the specification of AlphaStep/5-phase, so that refer to the AlphaStep/5-phase manual and match the settings. For parameters that can be set by the Simple Motion module, refer to Section 5.1.3 "Setting items for HPR parameters".

This method is not available except for the stepping driver. If the method is executed, the error "HPR method invalid" (error code: 232) occurs.

(c) Backlash compensation after the driver HPR method

When "[Pr.11] Backlash compensation amount" is set in the Simple Motion module, whether the backlash compensation is necessary or not is judged from "[Pr.44] HPR direction" of the Simple Motion module in the axis operation such as positioning after the driver HPR. When the positioning is executed in the same direction as "[Pr.44] HPR direction", the backlash compensation is not executed. However, when the positioning is executed in the reverse direction against "[Pr.44] HPR direction", the backlash compensation is executed.

Note that the HPR is executed based on the HPR direction of the parameter of AlphaStep/5-phase during the driver HPR. Therefore, set the same direction to "[Pr.44] HPR direction" of the Simple Motion module and the HPR direction of the parameter of AlphaStep/5-phase.

■ Operation chart

1)	The machine HPR is started. (The HPR is executed based on the positioning pattern set in AlphaStep/5-phase.)

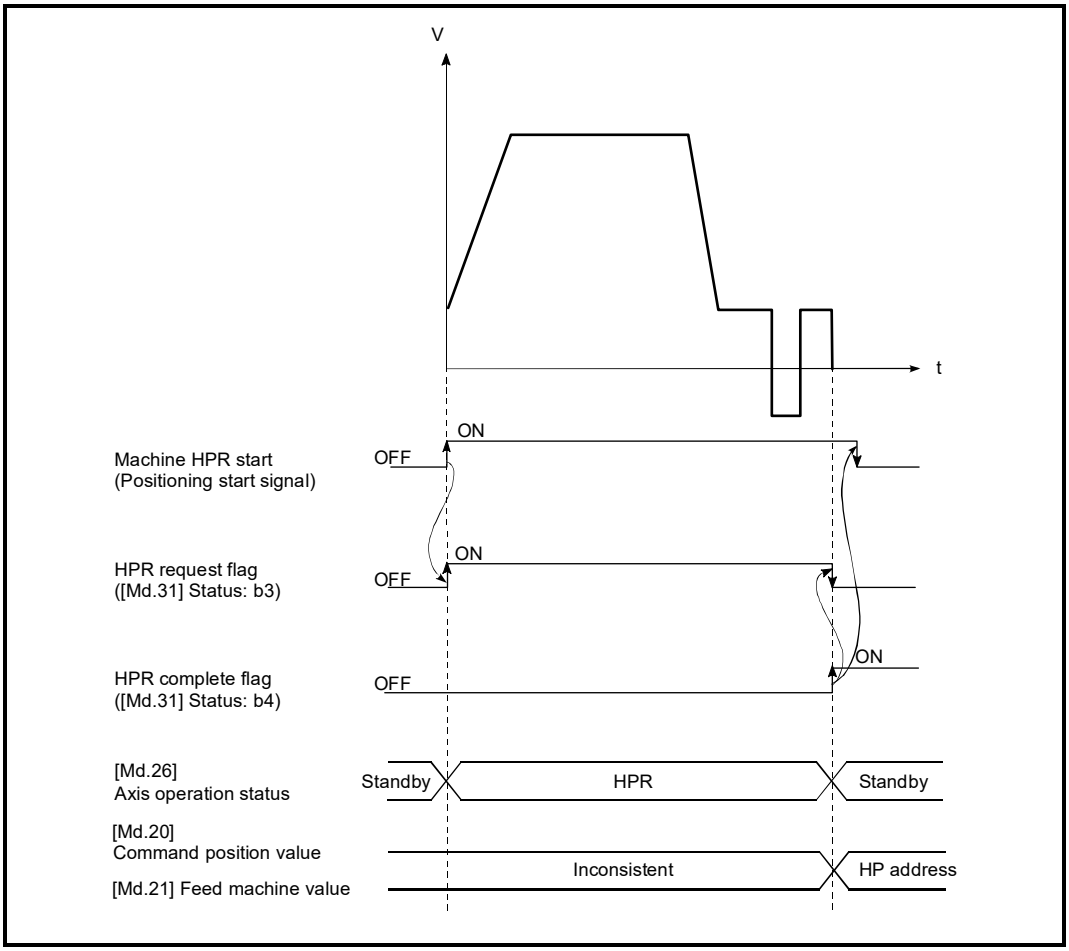

Driver HPR method

(3) Servo OFF

- For 5-phase (open loop control system), if the motor is moved by an external force when servo OFF occurs, it is not possible to detect the position and position information is not updated.
- Do not rotate the motor during servo OFF. If the motors are rotated, a position displacement occurs.
- For 5-phase (open loop control system), "HPR request flag" ([Md.31] Status: b3) turns ON in a servo OFF state. After turning servo ON, perform an HPR again.
- For 5-phase (open loop control system) when an encoder is installed, checking position displacement and maladjustments is possible by monitoring "position feedback" and "external encoder counter value" in the optional data monitor. Refer to the manual of AlphaStep/5-phase for the units and increase direction of the encoder count value, and checking methods.

(4) Control mode

Only the position control mode (speed control including the position control, position loop, etc.) can be used. Speed control mode and torque control mode of expansion control (speed control not including position loop, torque control, continuous operation to torque control) cannot be used. If a control mode switch is performed, the warning "Illegal control mode switching" (warning code: 124) occurs and the switching is not executed.

(5) Servo parameter

(a) Control of servo parameters

Parameters of AlphaStep/5-phase are not controlled by the Simple Motion module. Therefore, even though the parameter of AlphaStep/5-phase is changed during the communication between the Simple Motion module and AlphaStep/5-phase, the change is not applied to the buffer memory of the Simple Motion module.

(b) Servo parameter change request

Change request of servo parameter ("[Cd.130] Servo parameter read/write request" to "[Cd.132] Change data") can be executed. The servo parameter of AlphaStep/5-phase is controlled in a unit of 2 words. However, "0001H" (1 word write request) and "0002H" (2 words write request) can be set in "[Cd.130] Servo parameter read/write request". Refer to the AlphaStep/5-phase manual for the specification method of parameters to change.

When the power of AlphaStep/5-phase is turned OFF, the parameter changed by the servo parameter change request becomes invalid, and the value written by AlphaStep/5-phase data editing software becomes valid.

(6) Optional data monitor

The following shows data types that can be set.

Data type	Unit
Encoder multiple revolution counter	[rev]
Position feedback (Used point: 2 words)	[PLS]
Encoder position within one revolution (Used point: 2 words)	[PLS]
External encoder counter value (Used point: 2 words)	[PLS]
Optional address of registered monitor	—

(7) Gain switching command, PI-PID switching request, and Semi/Fully closed loop switching request

Gain switching command, PI-PID switching request, and Semi/Fully closed loop switching request are not available.

(8) Driver communication

The driver communication is not supported.
If the driver communication is set in a servo parameter, the setting is ignored.

(9) Torque limit

The torque limit value set in the Simple Motion module is ignored. Set the torque limit value with the parameter on the driver side.

(10) Axis monitor data

(a) "[Md.104] Motor current value" is always "0". "[Md.109] Regenerative load ratio/Optional data monitor output 1", "[Md.110] Effective load torque/Optional data monitor output 2", and "[Md.111] Peak torque ratio/Optional data monitor output 3" become "0" if the optional data monitor is not set.

(b) "Zero point pass" ([Md.108] Servo status (low-order buffer memory address): b0) is always OFF.

(c) "Zero speed" ([Md.108] Servo status (low-order buffer memory address): b3) and "Speed limit" ([Md.108] Servo status (low-order buffer memory address): b4) are always OFF.

(d) "[Md.113] Semi/Fully closed loop status" is always "0".

(e) "[Md.107] Parameter error No." is always "0".

(f) "In-position" ([Md.108] Servo status (high-order buffer memory address): b12) is OFF during the axis operation. It is turned ON when the axis operation is completed.

(11) Amplifier-less operation

The amplifier-less operation cannot be used to the AlphaStep/5-phase axis. If the amplifier-less operation is used, the AlphaStep/5-phase set axis is not connected.

(12) In-position range

When the position of the cam axis is restored in synchronous control, a check is performed by the servo parameter "In-position range" (PA10). However, because the servo parameter settings are not performed in AlphaStep/5-phase, the "In-position range" is checked as 100 [PLS].

[4] AlphaStep/5-phase detection error/warning

(1) Error

When an error occurs on AlphaStep/5-phase, the error detection signal turns ON, and the error code (61952 to 62207) is stored in "[Md.23] Axis error No.". The servo alarms (0x00 to 0xFF) of AlphaStep/5-phase are stored in "[Md.114] Servo alarm" and "[Md.57] Servo alarm" in error history. The alarm detail number is not stored. However, "0" is always stored in "[Md.107] Parameter error No.".

When the driver HPR method is selected and an HPR error is detected, the error "Driver HPR error" (error code: 233) is stored in "[Md.23] Axis error No.". Also, "Driver operation alarm" ([Md.500] Servo status7: b9) is turned ON and the operation alarm generated on AlphaStep/5-phase is stored in "[Md.502] Driver operation alarm number" and "[Md.61] Driver operation alarm number" in error history.

Confirm the specifications of AlphaStep/5-phase for details.

(2) Warning

No warning occurs on AlphaStep/5-phase.

Appendix 6.4 IAI electric actuator controller manufactured by IAI Corporation

The IAI Corporation made IAI electric actuator controller can be connected via SSCNETⅢ/H. Contact your nearest IAI sales office for details of IAI electric actuator controller.

The details shown below explain about the "Connection with IAI electric actuator controller".

[1] Connecting method

[2] Comparisons of specifications with MR-J5(W)-B/MR-J4(W)-B

[3] Precautions during control

[4] IAI electric actuator controller detection error/warning

[1] Connecting method

(1) System configuration

The system configuration using IAI electric actuator controller is shown below.

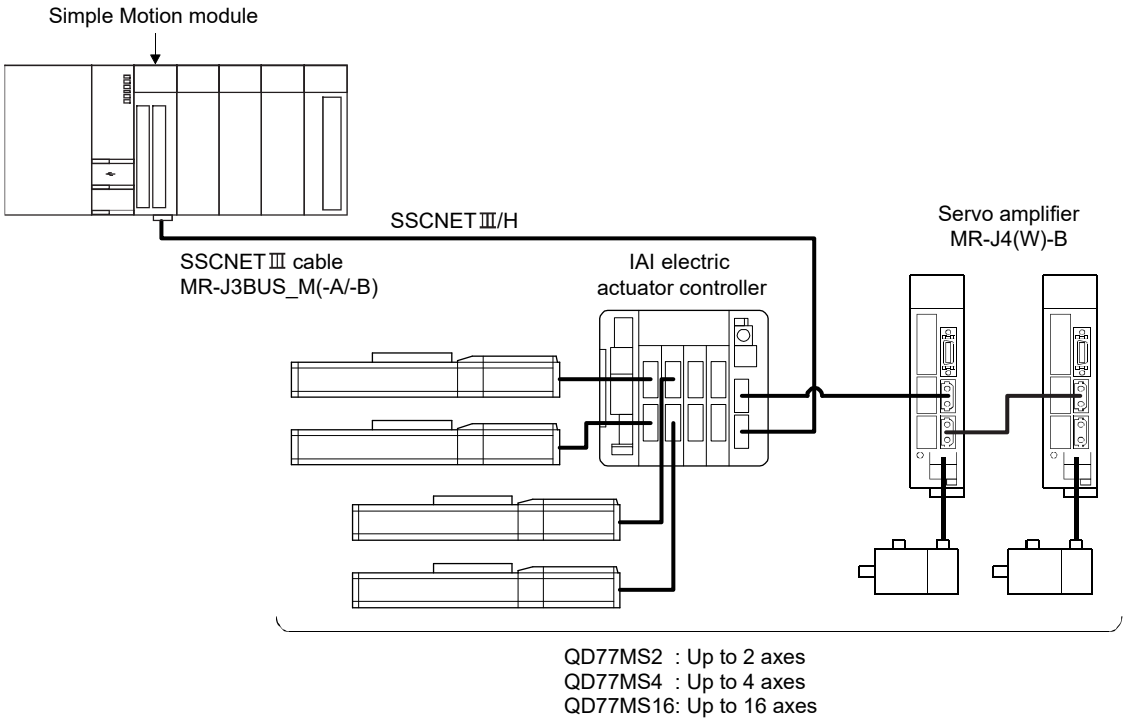

(2) Parameter setting

To connect IAI electric actuator controller, set the following parameters.

Setting item		Setting value	Default value	Buffer memory address	
				QD77MS2 QD77MS4	QD77MS16
[Pr.100]	Servo series	98: IAI Controller for Electric Actuator (manufactured by IAI Corporation)	0	30100+200n	28400+100n

n: Axis No.-1

POINT
Parameters set in IAI electric actuator controller are not controlled by the Simple Motion module.

[2] Comparisons of specifications with MR-J5(W)-B/MR-J4(W)-B

Item		IAI electric actuator controller	MR-J5(W)-B/MR-J4(W)-B
[Pr.100] Servo series		98: IAI Controller for Electric Actuator (manufactured by IAI Corporation)	32: MR-J4-_B_(-RJ), MR-J4W_-_B (2-, 3- axis type) 128: MR-J5-_B_(-RJ), MR-J5W_-_B (2-, 3-axis type)
Control of servo amplifier parameters		Controlled by IAI electric actuator controller.	Controlled by Simple Motion module.
Detailed parameter 1	[Pr.80] External input signal selection	External input signals of IAI electric actuator controller are not available.	External input signals of servo amplifier are available.
Expansion parameter	[Pr.91] to [Pr.94] Optional data monitor: Data type setting	-: Optional address of registered monitor	The following items can be monitored. 1: Effective load ratio 2: Regenerative load ratio 3: Peak load ratio 4: Load inertia moment ratio 5: Model loop gain 6: Bus voltage 7: Servo motor speed 8: Encoder multiple revolution counter 9: Unit power consumption 10: Instantaneous torque 12: Servo motor thermistor temperature 13: Torque Equivalent to Disturbance 14: Overload alarm margin 15: Excessive error alarm margin 16: Settling time 17: Overshoot amount 18: Internal temperature of encoder 20: Position feedback 21: Encoder position within one revolution 22: Selected droop pulse 23: Unit total power consumption 24: Load-side encoder information 1 25: Load-side encoder information 2 26: Z-phase counter 27: Servo motor side/load-side position deviation 28: Servo motor side/load-side speed deviation 30: Unit power consumption (2 words) -: Optional address of registered monitor
Absolute position system		Possible	Possible
Unlimited length feed		Not possible	Possible
HPR method		Driver HPR method	Proximity dog method, Count method 1), 2), Data set method, Scale origin signal detection method
Positioning control, Expansion control		Position control mode	Position control mode, Speed control mode, Torque control mode, Continuous operation to torque control mode
Gain switching command		Invalid	Valid
PI-PID switching command		Invalid	Valid
Control loop (semi/fully) switching command		Invalid	Valid when using servo amplifier for fully closed loop control
Amplifier-less operation function		Not possible (Note-1)	Possible (Note-2)

Item	IAI electric actuator controller	MR-J5(W)-B/ MR-J4(W)-B
Servo parameter change request	Not possible	Possible (1 word write (Note-3))
Driver communication	Not possible	Possible
Monitoring of servo parameter error No.	Not possible	Possible
Servo alarm/warning (Error history/warning history)	Alarm codes/warning codes detected by IAI electric actuator controller and operation error codes during driver HPR method are stored in "Servo alarm/warning".	Alarm codes/warning codes detected by servo amplifier are stored in "Servo alarm/warning".
[Md.108] Servo status	High-order buffer memory address b0: READY ON b1: Servo ON b7: Servo alarm b12: In-position b13: Current cutback	High-order buffer memory address b0: READY ON b1: Servo ON b2, b3: Control mode b4: Gain switching b5: Fully closed loop control switching b7: Servo alarm b12: In-position b13: Torque limit b14: Absolute position lost b15: Servo warning Low-order buffer memory address b0: Zero point pass b3: Zero speed b4: Speed limit b8: PID control
[Md.500] Servo status7	b9: Driver operation alarm	—
Programming tool	MR Configurator2 is not available. Use IAI electric actuator controller editing software.	MR Configurator2 is available.

(Note-1): Set as the unconnected status during amplifier-less operation.

(Note-2): During the amplifier-less operation, the following types of servo amplifier and servo motor are pseudo-connected.

For MR-J4(W)-B

Servo amplifier type: MR-J4-10B

Motor type: HG-KR053 (Resolution per servo motor rotation: 4194304 pulses/rev)

For MR-J5(W)-B

Servo amplifier type: MR-J5-10B

Motor type: Rotary servo motor (Resolution per servo motor rotation: 4194304 pulses/rev)

(Note-3): For MR-J5(W)-B, 2 words write is possible.

[3] Precautions during control

(1) Absolute position system (ABS)

The ABS/INC setting is performed by the connected IAI electric actuator controller.

(2) HPR

The method and some operation of the HPR using the IAI electric actuator controller differ from those of the HPR using the servo amplifier.

(a) HPR method that can be used

[Pr.43] HPR method	Possible/Not possible
Proximity dog method	×*1
Count method 1)	×*1
Count method 2)	×*1
Data set method	×*1
Scale origin signal detection method	×*1
Driver HPR method	○

○: Possible ×: Not possible

*1: The error "HPR method invalid" (error code: 232) occurs and HPR is not performed.

(b) Driver HPR method

The following shows an operation outline of the HPR method "Driver HPR method".

The HPR is executed based on the positioning pattern set in the IAI electric actuator controller. Set the setting values of HPR in the parameters of the IAI electric actuator controller. The operation of HPR and "b0: Lower limit", "b1: Upper limit" and "b6: Proximity dog signal" of "[Pr.22] Input signal logic selection" depend on the specification of the IAI electric actuator controller, so that refer to the IAI electric actuator controller manual and match the settings. For parameters that can be set by the Simple Motion module, refer to Section 5.1.3 "Setting items for HPR parameters".

This method is not available except for the stepping driver (including the IAI electric actuator controller). If the method is executed, the error "HPR method invalid" (error code: 232) occurs.

(c) Backlash compensation after the driver HPR method

When "[Pr.11] Backlash compensation amount" is set in the Simple Motion module, set the positive direction in "[Pr.44] HPR direction".

■ Operation chart

1)	The machine HPR is started. (The HPR is executed based on the positioning pattern set in the IAI electric actuator controller.)

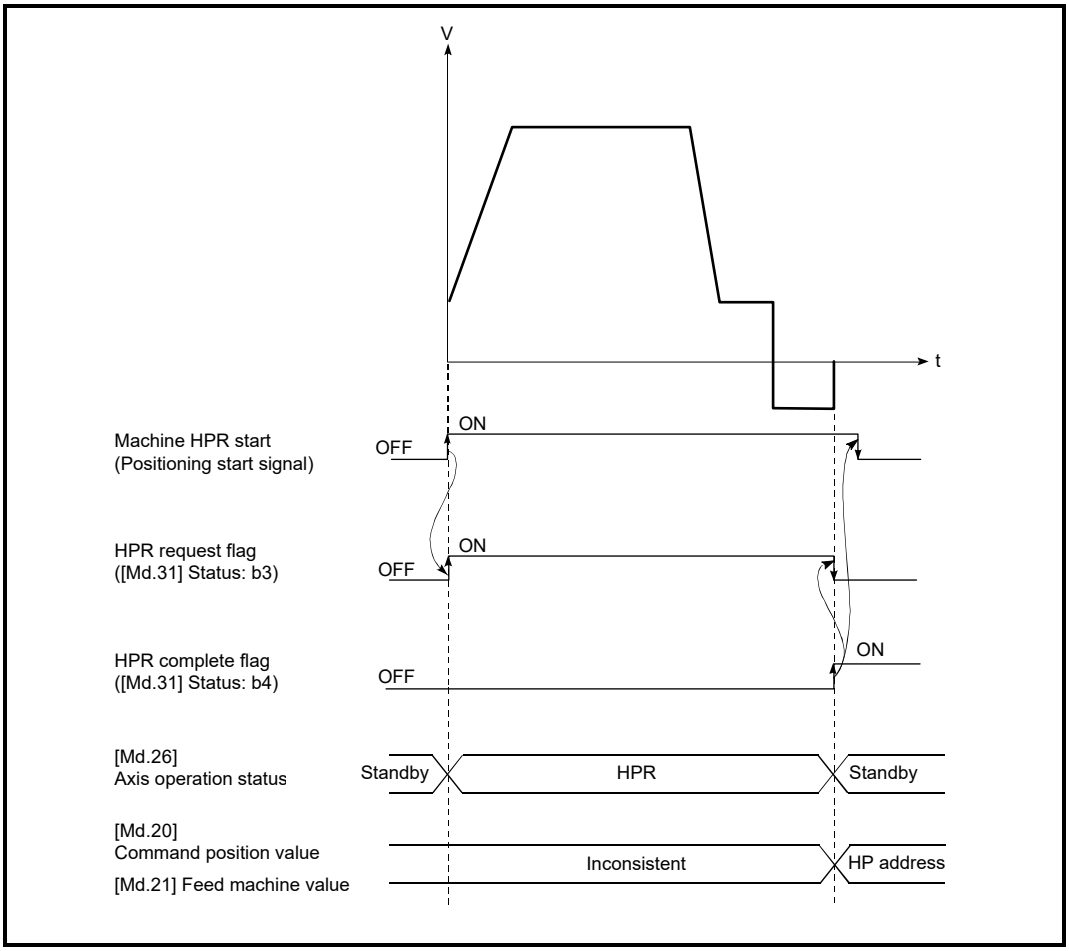

Driver HPR method

(3) Servo OFF

The system is closed loop configuration. If the motor is moved by an external force, the position information is updated.

(4) Control mode

Position control mode (position control, and speed control including position loop) can be used. Speed control mode and torque control mode of expansion control (speed control not including position loop, torque control, continuous operation to torque control) cannot be used. If a control mode switch is performed, the warning "Illegal control mode switching" (warning code: 124) occurs and the switching is not executed.

(5) Servo parameter

(a) Control of servo parameters

Parameters of IAI electric actuator controller are not controlled by the Simple Motion module. Therefore, even though the parameter of IAI electric actuator controller is changed during the communication between the Simple Motion module and IAI electric actuator controller, the change is not applied to the buffer memory of the Simple Motion module.

(6) Optional data monitor

The following table shows data type that can be set.

Data type	Unit
Optional address of registered monitor	—

(7) Gain switching command, PI-PID switching request, and Semi/Fully closed loop switching request

Gain switching command, PI-PID switching request, and Semi/Fully closed loop switching request are not available.

(8) Driver communication

The driver communication is not supported.
If the driver communication is set in a servo parameter, the setting is ignored.

(9) Axis monitor data

(a) "[Md.104] Motor current value" is always "0".
(b) "Zero point pass" ([Md.108] Servo status (low-order buffer memory address): b0) is always OFF.
(c) "Zero speed" ([Md.108] Servo status (low-order buffer memory address): b3) and "Speed limit" ([Md.108] Servo status (low-order buffer memory address): b4) are always OFF.
(d) "[Md.113] Semi/Fully closed loop status" is always "0".
(e) "[Md.107] Parameter error No." is always "0".
(f) "In-position" ([Md.108] Servo status (high-order buffer memory address): b12) is OFF during the axis operation. It is turned ON when the axis operation is completed.
(g) When the data that cannot be specified is set in "[Pr.91] Optional data monitor: Data type setting 1" to "[Pr.94] Optional data monitor: Data type setting 4", "0" is stored in "[Md.109] Regenerative load ratio/Optional data monitor output 1" to "[Md.112] Optional data monitor output 4". Refer to "[2] Comparisons of specifications with MR-J5(W)-B/MR-J4(W)-B" for the data that can be set.

(10) Amplifier-less operation

The amplifier-less operation cannot be used to the IAI electric actuator controller axis. If the amplifier-less operation is used, the IAI electric actuator controller set axis is not connected.

(11) In-position range

When the position of the cam axis is restored in synchronous control, a check is performed by the servo parameter "In-position range" (PA10). However, because the servo parameter settings are not performed in IAI electric actuator controller, the "In-position range" is checked as 100 [PLS].

[4] IAI electric actuator controller detection error/warning

(1) Error

When an error occurs on IAI electric actuator controller, the error detection signal turns ON, and the error code (62208 to 62463) is stored in "[Md.23] Axis error No.". The servo alarms (0x00 to 0xFF) of IAI electric actuator controller are stored in "[Md.114] Servo alarm" and "[Md.57] Servo alarm" in error history. The alarm detailed number. is not stored. However, "0" is always stored in "[Md.107] Parameter error No.".

When the driver HPR method is selected and an HPR error is detected, the error "Driver HPR error" (error code: 233) is stored in "[Md.23] Axis error No.". Also, "Driver operation alarm" ([Md.500] Servo status7: b9) is turned ON and the operation alarm generated on the IAI electric actuator controller is stored in "[Md.502] Driver operation alarm number" and "[Md.61] Driver operation alarm number" in error history.

Confirm the specifications of IAI electric actuator controller for details.

(2) Warning

No warning occurs on IAI electric actuator controller.

Appendix 6.5 Connection with MR-JE-B(F)

The servo amplifier MR-JE-B(F) can be connected using SSCNETⅢ/H.

The details shown below explain about the "Connection with MR-JE-B(F)".
[1] Comparisons of specifications with MR-J4(W)-B

[1] Comparisons of specifications with MR-J4(W)-B

Item		MR-JE-B(F)	MR-J5(W)-B/MR- J4(W)-B
[Pr.100] Servo series		48: MR-JE-_B(F)	32: MR-J4-_B_(-RJ), MR-J4W_-_B (2-, 3- axis type) 128: MR-J5-_B_(-RJ), MR-J5W_-_B (2-, 3- axis type)
Operation mode		Standard	Standard/Fully closed/Linear/Direct drive
Detailed parameter 1	[Pr.80] External input signal selection	External input signals of servo amplifier are available. (Note-1)	External input signals of servo amplifier are available.
Control loop (semi/fully) switching command		Invalid	Valid when using servo amplifier for fully closed loop control
Encoder resolution		131072 pulses/rev	4194304 pulses/rev
Amplifier-less operation function		Possible (Note-2)	Possible
Driver communication		Not possible	Possible
Virtual servo amplifier function		Not possible	Possible

(Note-1): When the software version of the servo amplifier MR-JE-B is "C4" or before:
When "1: External input signal of servo amplifier" is set in "[Pr.80] External input signal selection" at MR-JE-B use, the axis error or warning does not occur and the external signal (upper/lower limit switch, proximity dog) cannot be operated. Refer to Section 14.4 "External signal selection function" for the program example and system configuration when "2: Buffer memory of QD77MS" is set.

(Note-2): Operates artificially as the following servo amplifier and servo motor during amplifier-less operation mode.
Servo amplifier type: MR-J4-10B
Motor type: HG-KR053 (Resolution per servo motor rotation: 4194304 pulses)

Important

The servo amplifier MR-JE-B(F) is integrated with the main circuit power supply and the control power supply.
Therefore, when the power of the servo amplifier is turned OFF, the controller cannot communicate with the axes after the axis whose power is turned OFF.

[2] External circuit design

Configure up the power supply circuit and main circuit which turn off the power supply after detection alarm occurrence and servo forced stop. When designing the main circuit of the power supply, make sure to use a circuit breaker (MCCB).

The outline diagrams for the external device connection interface are shown below.

(1) Example when using the forced stop of the QD77MS (For MR-JE-BF)

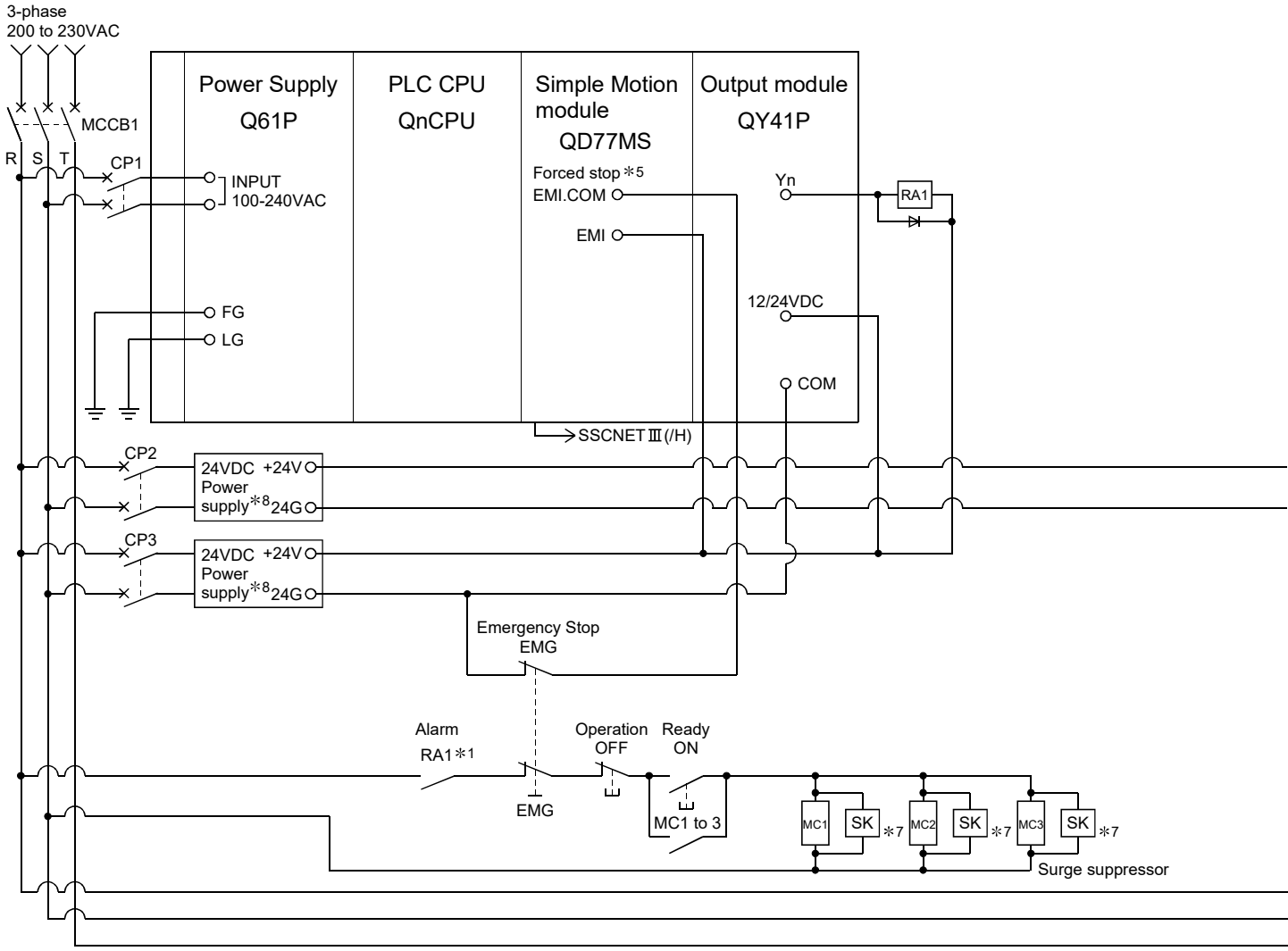

POINT

(1) ＊1: Configure up the power supply circuit which switch off the electromagnetic contactor (MC) after detection alarm occurrence on the PLC CPU.
(2) ＊2: It is also possible to use a full wave rectified power supply as the power supply for the electromagnetic brake.
(3) ＊3: It is also possible to perform the forced stop using forced stop terminal of the servo amplifier.
(4) ＊4: Set the axis selection rotary switch of servo amplifier as follows to set the axis No. of servo amplifier.
- Axis 1: 0 • Axis 5: 4 • Axis 9: 8 • Axis 13: C
- Axis 2: 1 • Axis 6: 5 • Axis 10: 9 • Axis 14: D
- Axis 3: 2 • Axis 7: 6 • Axis 11: A • Axis 15: E
- Axis 4: 3 • Axis 8: 7 • Axis 12: B • Axis 16: F

(5) ＊5: The status of forced stop input signal can be confirmed with "[Md.50] Forced stop input". Be sure that the forced stop 24 V DC power supply is not used with the electromagnetic brake of the motor or the electromagnetic valve power supply.
(6) ＊6: Refer to the servo amplifier instruction manual for selection of the circuit breaker and electromagnetic contactor.
(7) ＊7: The surge suppressor is recommended to be used for an AC relay or electromagnetic contactor (MC) near the servo amplifier. Refer to the servo amplifier instruction manual for selection of the surge suppressor.
(8) ＊8: Wire the electromagnetic brake power supply and the control power supply using a separate power supply.

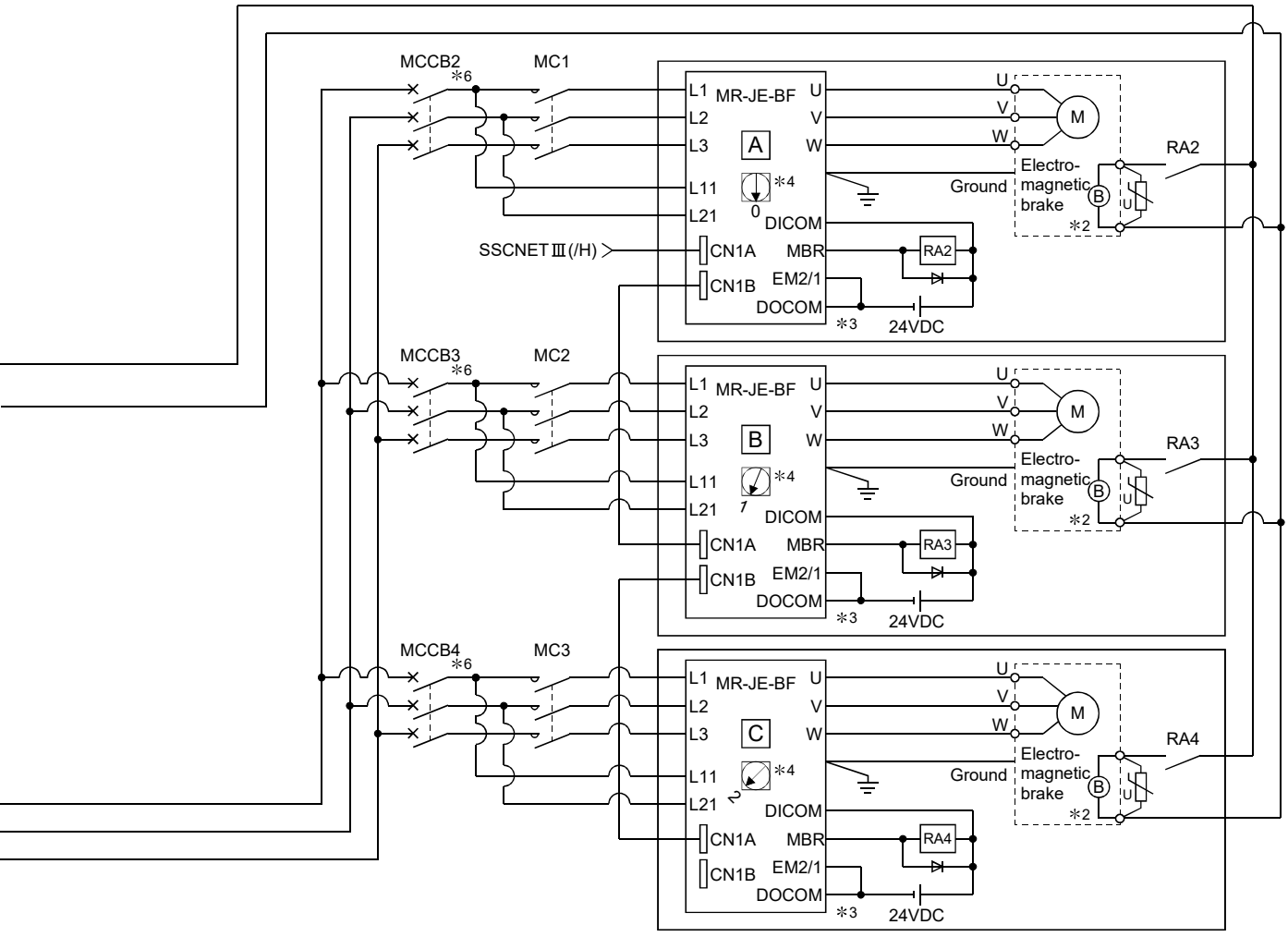

(Note-1): When the control power supply of servo amplifier is shut off, it is not possible to communicate with the servo amplifier after that.
Example) When the control power supply L11/L21 of the servo amplifier [B] in the figure is shut off, it is also not possible to communicate with the servo amplifier [C].
If only a specific servo amplifier main circuit power supply is shut off, be sure to shut off the main circuit power supply L1/L2/L3, and do not shut off the control power supply L11/L21.

(Note-2): Be sure to shut off the both of main circuit power supply L1/L2/L3 and control power supply L11/L21 after disconnection of SSCNET communication by the connect/disconnect function of SSCNET communication at the time of exchange of servo amplifier. At this time, it is not possible to communicate between the servo amplifier and Simple Motion module. Therefore, be sure to exchange the servo amplifier after stopping the operating of machine beforehand.

(Note-3): If the emergency stop signal of Simple Motion module turns OFF when setting of "[Pr.82] Forced stop valid/invalid selection" to "0: Valid (External input signal)", servomotor is stopped with dynamic brake. (The LED display of servo amplifier indicates "E7.1" (Controller forced stop input warning).)

MEMO

(2) Example when using the forced stop of the QD77MS and MR-JE-BF

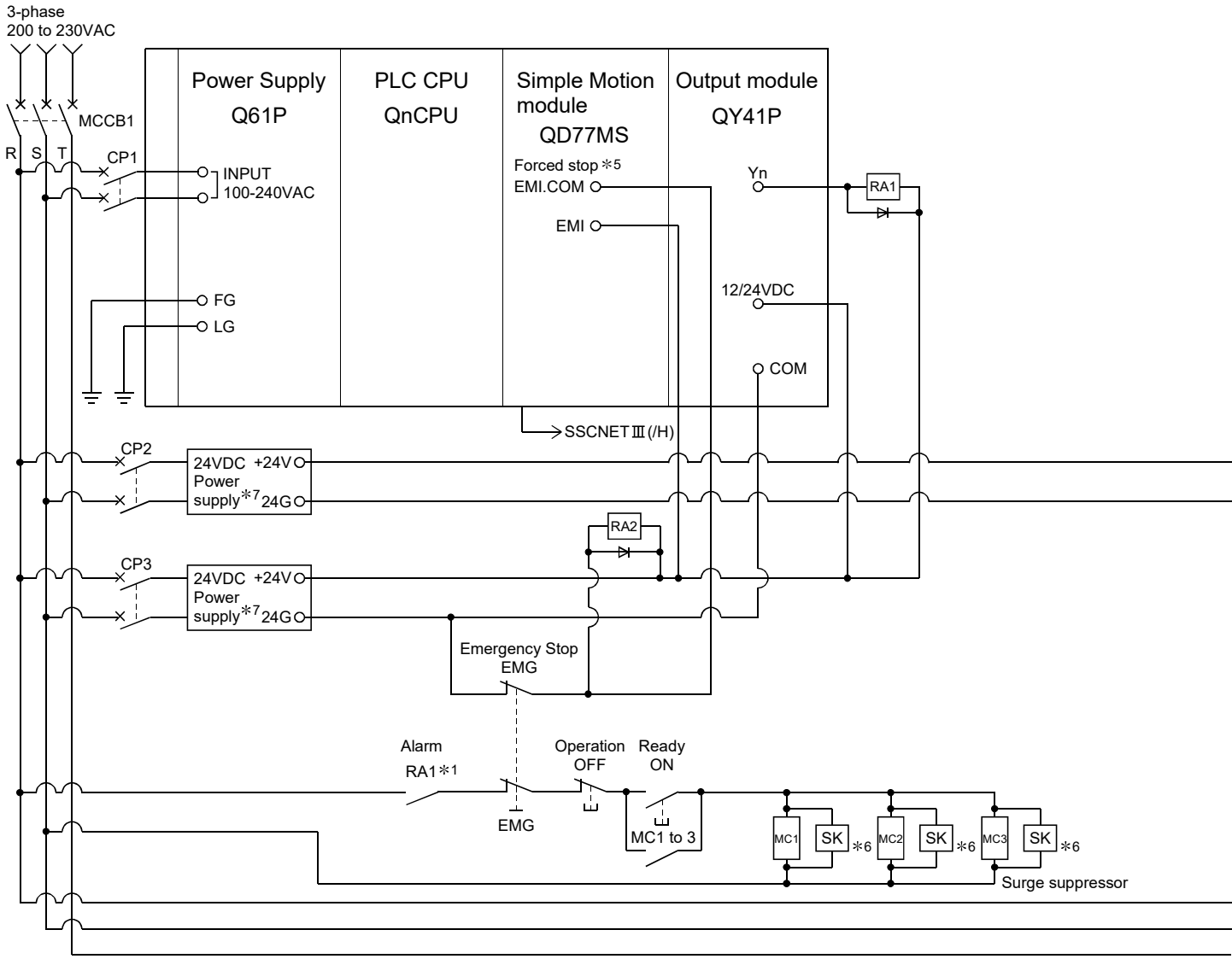

POINT

(1) ＊1: Configure up the power supply circuit which switch off the electromagnetic contactor (MC) after detection alarm occurrence on the PLC CPU.

(2) ＊2: It is also possible to use a full wave rectified power supply as the power supply for the electromagnetic brake.

(3) ＊3: Set the axis selection rotary switch of servo amplifier as follows to set the axis No. of servo amplifier.

- Axis 1: 0
- Axis 2: 1
- Axis 3: 2
- Axis 4: 3
- Axis 5: 4
- Axis 6: 5
- Axis 7: 6
- Axis 8: 7
- Axis 9: 8
- Axis 10: 9
- Axis 11: A
- Axis 12: B
- Axis 13: C
- Axis 14: D
- Axis 15: E
- Axis 16: F

(4) ＊4: Refer to the servo amplifier instruction manual for selection of the circuit breaker and electromagnetic contactor.

(5) ＊5: The status of forced stop input signal can be confirmed with "[Md.50] Forced stop input". Be sure that the forced stop 24 V DC power supply is not used with the electromagnetic brake of the motor or the electromagnetic valve power supply.

(6) ＊6: The surge suppressor is recommended to be used for an AC relay or electromagnetic contactor (MC) near the servo amplifier. Refer to the servo amplifier instruction manual for selection of the surge suppressor.

(7) ＊7: Wire the electromagnetic brake power supply and the control power supply using a separate power supply.

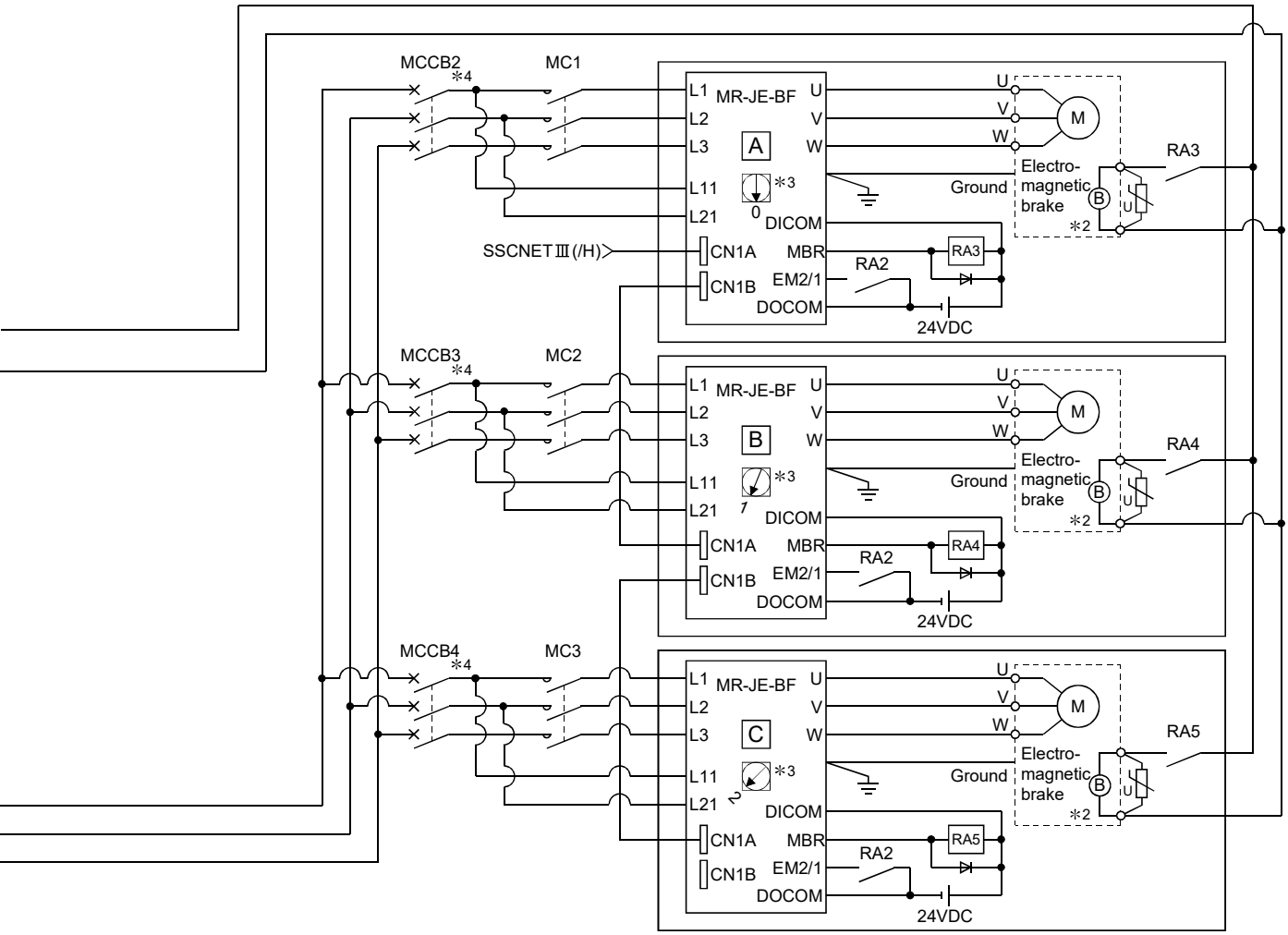

(Note-1): When the control power supply of servo amplifier is shut off, it is not possible to communicate with the servo amplifier after that.
Example) When the control power supply L11/L21 of the servo amplifier [B] in the figure is shut off, it is also not possible to communicate with the servo amplifier [C].
If only a specific servo amplifier main circuit power supply is shut off, be sure to shut off the main circuit power supply L1/L2/L3, and do not shut off the control power supply L11/L21.

(Note-2): Be sure to shut off the both of main circuit power supply L1/L2/L3 and control power supply L11/L21 after disconnection of SSCNET communication by the connect/disconnect function of SSCNET communication at the time of exchange of servo amplifier. At this time, it is not possible to communicate between the servo amplifier and Simple Motion module. Therefore, be sure to exchange the servo amplifier after stopping the operating of machine beforehand.

(Note-3): The dynamic brake is operated, and servomotor occurs to the free run when EM1 (forced stop) of servo amplifier turn OFF. At the time, the display shows the servo forced stop warning (E6.1).
During ordinary operation, do not used forced stop signal to alternate stop and run.
The service life of the servo amplifier may be shortened.

MEMO

Appendix 6.6 Connection with MR-J5(W)-B

The servo amplifier MR-J5(W)-B can be connected via SSCNETⅢ/H.
MR-J5(W)-B has new functions such as battery-less, one-connector/one-touch lock, simple converter, predictive maintenance, quick tuning, machine diagnosis, motor incorrect wiring detection, disconnection detection, ENC communication diagnosis.

The details shown below explain about the "Connection with MR-J5(W)-B".

[1] Connecting method

[2] Comparisons of specifications with MR-J5(W)-B and MR-J4(W)-B

[3] Precautions during control

[1] Connecting method

(1) System configuration

The system configuration using MR-J5(W)-B is shown below.

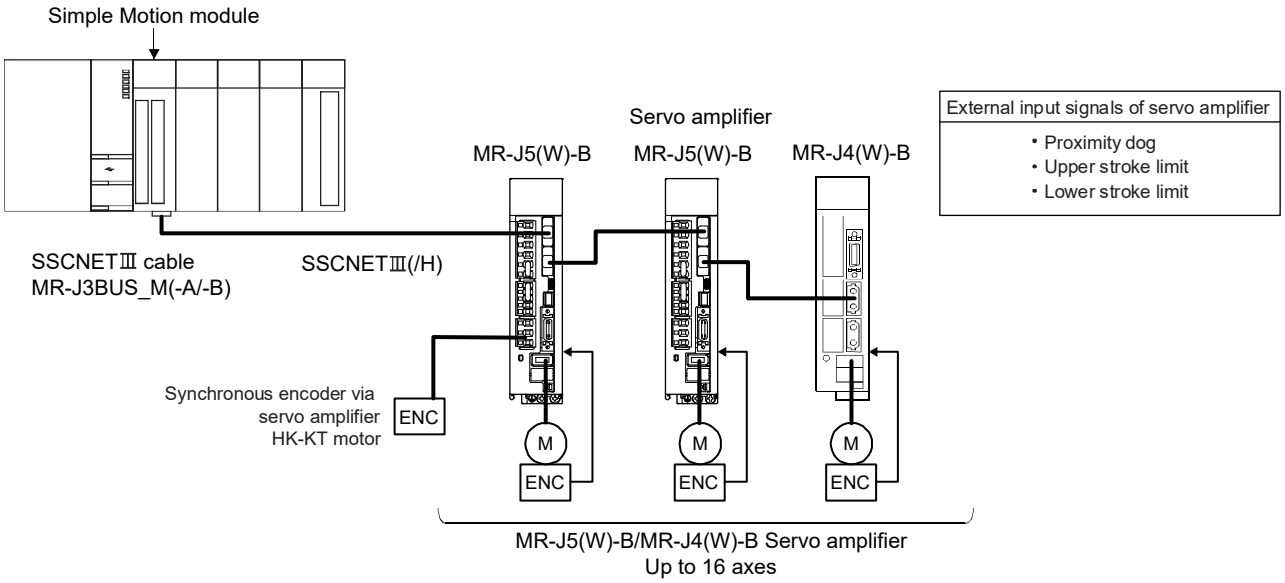

(2) Servo parameter setting

Since the servo parameters of MR-J5(W)-B are not in the buffer memory, set the servo parameters with one of the following methods.

• When using GX Works2

The servo parameters can be set easily.

Set the servo parameters in GX Works2 and perform "Write to module".

• When using the axis control data before the servo parameter transfer

The servo parameters can be set with the sequence program by using the axis control data. The servo parameters can be set even if the servo amplifier is not connected. Refer to (a) and (b) for details on the write/read method.

Setting item		Setting details/setting value	Buffer memory address	
			QD77MS2 QD77MS4	QD77MS16
[Cd.130]	Servo parameter read/write request	Set the read/write request of the servo parameter. (Note-1) 0000H: Not request (read/write completion) 0003H: Read/write failure 0022H: 2 words write request to internal memory 0032H: 2 words read request from internal memory	1554+100n	4354+100n
[Cd.131]	Parameter No.	Set the servo parameter to be changed.	1555+100n	4355+100n
[Cd.132]	Change data	Set the change value of servo parameter set in "[Cd.131] Parameter No.".	1556+100n 1557+100n	4356+100n 4357+100n

n: Axis No. - 1

(Note-1): Refer to "How to change individually the servo parameter after transfer of servo parameter" for details on "0001H: 1 word write request" and "0002H: 2 words write request".

• How to change individually the servo parameter after transfer of servo parameter

The servo parameters can be individually changed from Simple Motion module.

The following axis control data and setting values are used.

Setting item		Setting details/setting value	Buffer memory address	
			QD77MS2 QD77MS4	QD77MS16
[Cd.130]	Servo parameter read/write request	Set the read/write request of the servo parameter. 0000H: Not request (read/write completion) 0001H: 1 word write request 0002H: 2 words write request 0003H: Read/write failure	1554+100n	4354+100n
[Cd.131]	Parameter No.	Set the servo parameter to be changed.	1555+100n	4355+100n
[Cd.132]	Change data	Set the change value of servo parameter set in "[Cd.131] Parameter No.".	1556+100n 1557+100n	4356+100n 4357+100n

n: Axis No. - 1

Since the servo parameters of MR-J5(W)-B is in unit of 2 words, use "0002H: 2 words write request" in "[Cd.130] Servo parameter read/write request". When "0001H: 1 word write request" is used, only the lower 1 word is written.

Refer to Section 7.2 "Data transmission process" for the setting details.

(a) How to write the servo parameter using the axis control data

The following describes the procedure of servo parameter write using the axis control data. Refer to Section 7.2 "Data transmission process" for the timing of transferring the written servo parameter to the servo amplifier.

1) Set the servo parameter No. in "[Cd.131] Parameter No.".
2) Set the setting value for the servo parameter in "[Cd.132] Change data" in 2 words.
3) Set "0022H: 2 words write request to internal memory" in "[Cd.130] Servo parameter read/write request".
4) The Simple Motion module writes "[Cd.132] Change data" to the servo parameter of "[Cd.131] Parameter No.".
   When writing the data succeeds, "[Cd.130] Servo parameter read/write request" changes to "0000H: Not request (read/write completion)".
   When writing the data fails, "[Cd.130] Servo parameter read/write request" changes to "0003H: Read/write failure".
   ("[Cd.130] Servo parameter read/write request" is detected with the continuous detection. Returning "0003H: Read/write failure" to "0000H: Not request (read/write completion)" manually is not required.)
5) The servo parameters written by this method are lost when the power is turned OFF. To save them, backup the execution data. Refer to Section "14.3 Execution data backup function" for the details on the execution data backup method.

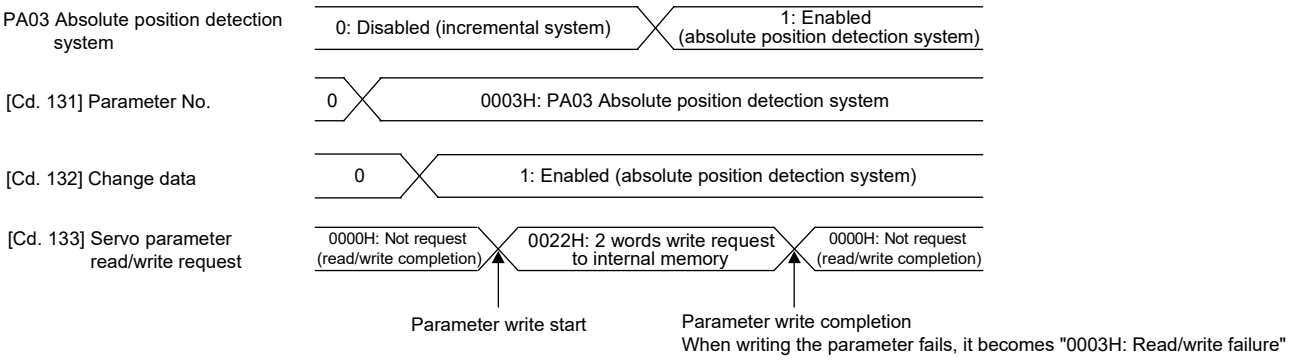

(b) How to read the servo parameter using the axis control data

The following describes the procedure of servo parameter read using the axis control data.

1) Set the servo parameter No. in "[Cd.131] Parameter No.".
2) Set "0032H: 2 words read request from internal memory" in "[Cd.130] Servo parameter read/write request".
3) The Simple Motion module reads "[Cd.132] Change data" from the servo parameter of "[Cd.131] Parameter No.".
   When reading the data succeeds, "[Cd.130] Servo parameter read/write request" changes to "0000H: Not request (read/write completion)".
   When reading the data fails, "[Cd.130] Servo parameter read/write request" changes to "0003H: Read/write failure".
   ("[Cd.130] Servo parameter read/write request" is detected with the continuous detection. Returning "0003H: Read/write failure" to "0000H: Not request (read/write completion)" manually is not required.)

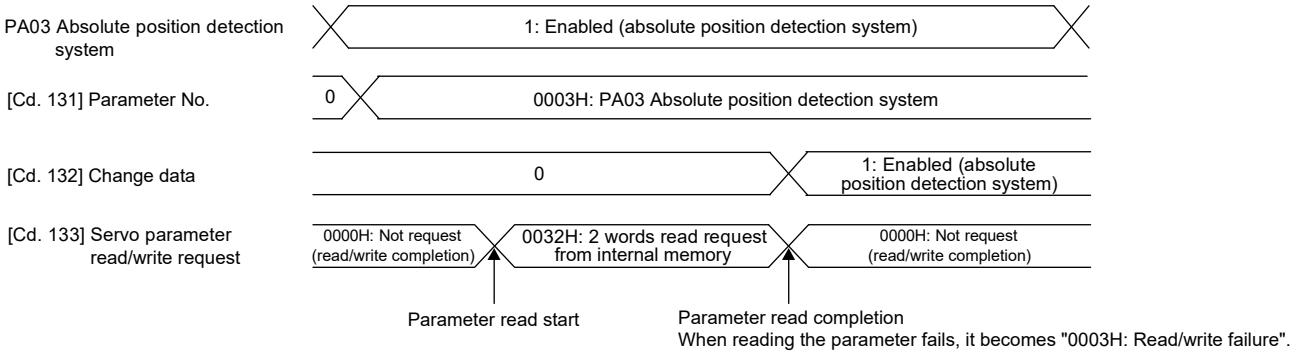

(3) Servo amplifier electronic gear setting

When a rotary servo motor is used with the Simple Motion module, the control is performed with the encoder resolution of 4194304 pulses/rev. Therefore, when a rotary servo motor with the encoder resolution of 67108864 pulses/rev such as an HK-KT motor is used, set 16 in the servo parameter "Electronic gear numerator (PA06)" and 1 in "Electronic gear denominator (PA07)".

For the electronic gears such as "[Pr.2] Number of pulses per rotation (AP)", calculate with the encoder resolution of 4194304 pulses/rev.

Refer to Section 13.3.2 "Electronic gear function" for details of the setting.

(Example) When HK-KT (67108864 pulses/rev) is used

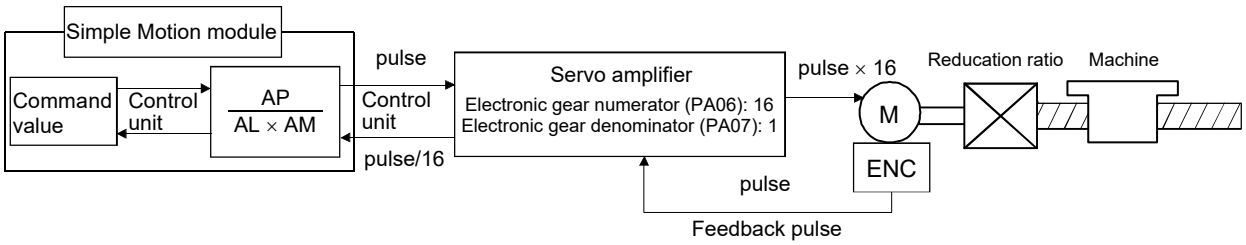

If the setting of the servo parameters "Electronic gear numerator (PA06)" and "Electronic gear denominator (PA07)" are different when MR-J5(W)-B is connected, an error "Servo amplifier electronic gear incorrect" (error code: 1004) occurs.

When the error has occurred, set the servo parameters "Electronic gear numerator (PA06)" and "Electronic gear denominator (PA07)", turn the PLC READY signal OFF and ON, and reconnect with the servo amplifier.

When the error "Servo amplifier electronic gear incorrect" (error code: 1004) occurs, the LED display status of the servo amplifier repeats "AC" and "Ad", and the connection is not completed until the error factor is removed.

Also, the following servo amplifiers cannot be connected until the end station.

(4) Gain switching command

- When "1: Gain switching command ON" is set in "[Cd.108] Gain switching command flag", the gain switching is commanded to the servo amplifier, and the load inertia moment ratio and each gain are switched to PB29 to PB36 and PB56 to PB60.
  "Gain switching" ([Md.108] Servo status: b4) is turned ON during the gain switching.
- When "2: Gain switching 2 command ON" is set in "[Cd.108] Gain switching command flag", the gain switching 2 is commanded to the servo amplifier, and the load inertia moment ratio and each gain are switched to PB67 to PB79.
  "Gain switching 2" ([Md.127] Servo status 5: b4) is turned on during the gain switching 2.
- The following shows the servo parameters switched by the gain switching and gain switching 2. Refer to the manual of the servo amplifier for details on the gain switching and gain switching 2.

Control gain	Before gain switching		After gain switching		After gain switching 2	
	Servo parameter	Abbreviation	Servo parameter	Abbreviation	Servo parameter	Abbreviation
Load to motor inertia ratio/load to motor mass ratio	PB06	GD2	PB29	GD2B	PB67	GD2C
Model control gain	PB07	PG1	PB60	PG1B	PB79	PG1C
Position control gain	PB08	PG2	PB30	PG2B	PB68	PG2C
Speed control gain	PB09	VG2	PB31	VG2B	PB69	VG2C
Speed integral compensation	PB10	VIC	PB32	VICB	PB70	VICC
Vibration suppression control 1 - Vibration frequency	PB19	VRF11	PB33	VRF1B	PB71	VRF1C
Vibration suppression control 1 - Resonance frequency	PB20	VRF12	PB34	VRF2B	PB72	VRF2C
Vibration suppression control 1 - Vibration frequency damping	PB21	VRF13	PB35	VRF3B	PB73	VRF3C
Vibration suppression control 1 - Resonance frequency damping	PB22	VRF14	PB36	VRF4B	PB74	VRF4C
Vibration suppression control 2 - Vibration frequency	PB52	VRF21	PB56	VRF21B	PB75	VRF21C
Vibration suppression control 2 - Resonance frequency	PB53	VRF22	PB57	VRF22B	PB76	VRF22C
Vibration suppression control 2 - Vibration frequency damping	PB54	VRF23	PB58	VRF23B	PB77	VRF23C
Vibration suppression control 2 - Resonance frequency damping	PB55	VRF24	PB59	VRF24B	PB78	VRF24C

[2] Comparisons of specifications with MR-J5(W)-B and MR-J4(W)-B

Item	MR-J5(W)-B	MR-J4(W)-B
[Pr.100] Servo series	128: MR-J5-_B_(-RJ), MR-J5W_-_B (2-, 3-axis type)	32: MR-J4-_B_(-RJ), MR-J4W_-_B (2-, 3-axis type)
Control of servo amplifier parameters	Controlled by Simple Motion module (Note-1)	Controlled by Simple Motion module
Operation mode	Semi closed loop control system, Fully closed loop control system, Linear servo system, Direct drive servo system	Semi closed loop control system, Fully closed loop control system, Linear servo system, Direct drive servo system
Encoder resolution (for semi closed loop control system/fully closed loop control system)	4194304 pulse/rev (Note-2)	4194304 pulse/rev
HPR method	Proximity dog method, Count method 1), 2), Data set method, Scale origin signal detection method	Proximity dog method, Count method 1), 2), Data set method, Scale origin signal detection method
Positioning control, Expansion control	Position control mode, Speed control mode, Torque control mode, Continuous operation to torque control mode	Position control mode, Speed control mode, Torque control mode, Continuous operation to torque control mode
Gain switching command	Valid	Valid
PI-PID switching command	Valid	Valid
Control loop (semi/fully) switching command	Valid when using servo amplifier for fully closed loop control	Valid when using servo amplifier for fully closed loop control
Amplifier-less operation function	Possible (Note-3)	Possible (Note-3)
Driver communication	Possible	Possible
Synchronous encoder via servo amplifier	HK-KT motor (resolution: 4194304 pulses/rev (Note-4))	HG-KR motor, HG-MR motor, Q171ENC-W8 (resolution: 4194304 pulses/rev)

(Note-1): The access method of the servo amplifier is different. Refer to (2) of "[1] Connecting method" in this section.

(Note-2): When a rotary servo motor with the encoder resolution of 67108864 pulses/rev such as an HK-KT motor is used, set 16 in the servo parameter "Electronic gear numerator (PA06)" and 1 in "Electronic gear denominator (PA07)" so that the resolution is 4194304 pulses/rev. Refer to (3) of "[1] Connecting method" in this section.

(Note-3): During the amplifier-less operation, the following types of servo amplifier and servo motor are pseudo-connected.

For MR-J4(W)-B

Servo amplifier type: MR-J4-10B

Motor type: HG-KR053 (Resolution per servo motor rotation: 4194304 pulses/rev)

For MR-J5(W)-B

Servo amplifier type: MR-J5-10B

Motor type: Rotary servo motor (Resolution per servo motor rotation: 4194304 pulses/rev)

(Note-4): Even if an HK-KT motor (encoder resolution: 67108864 pulses/rev) is used, the resolution is changed to 4194304 pulses/rev by the internal processing of the Simple Motion module.

POINT

When a high-precision synchronous at the load side is required for multiple axes, such as the interpolation control and synchronous control, construct a system using the servo amplifiers from the same series.

[3] Precautions during control

(1) Detection of the servo alarm

The error "Servo amplifier error" (error code: 2000) occurs at the time of servo alarm detection, and the warning "Servo amplifier warning" (warning code: 2100) occurs at the time of servo warning detection.

The alarm code and warning code of the servo amplifier are stored in "[Md.114] Servo alarm". Refer to Section 16.4.2 "Servo amplifier detection error" and Section 16.5.2 "Servo amplifier detection warning" for details.

Appendix 7 External dimension drawing

[1] QD77MS2

[Unit: mm(inch)]

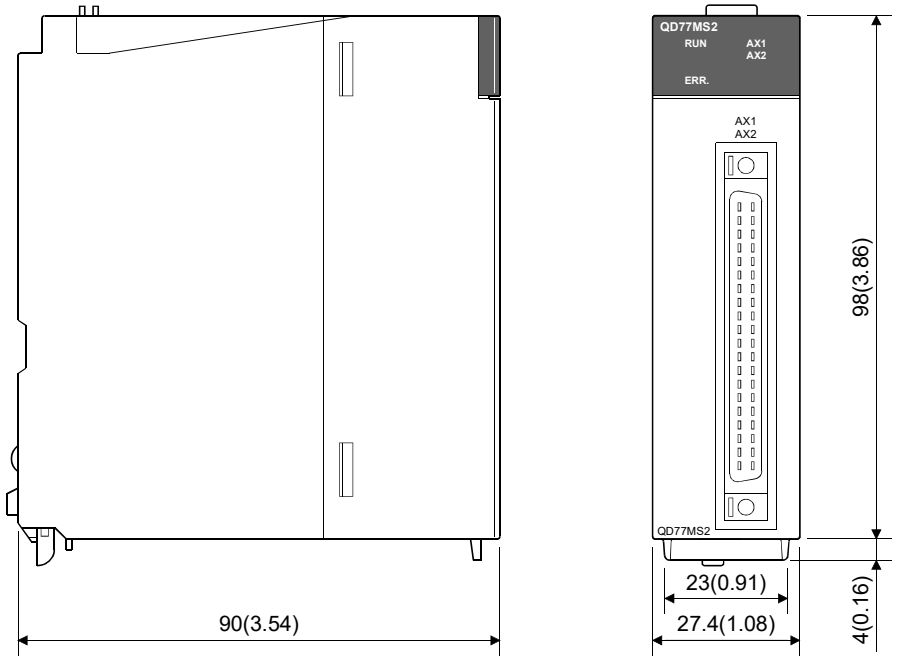

[2] QD77MS4

[Unit: mm(inch)]

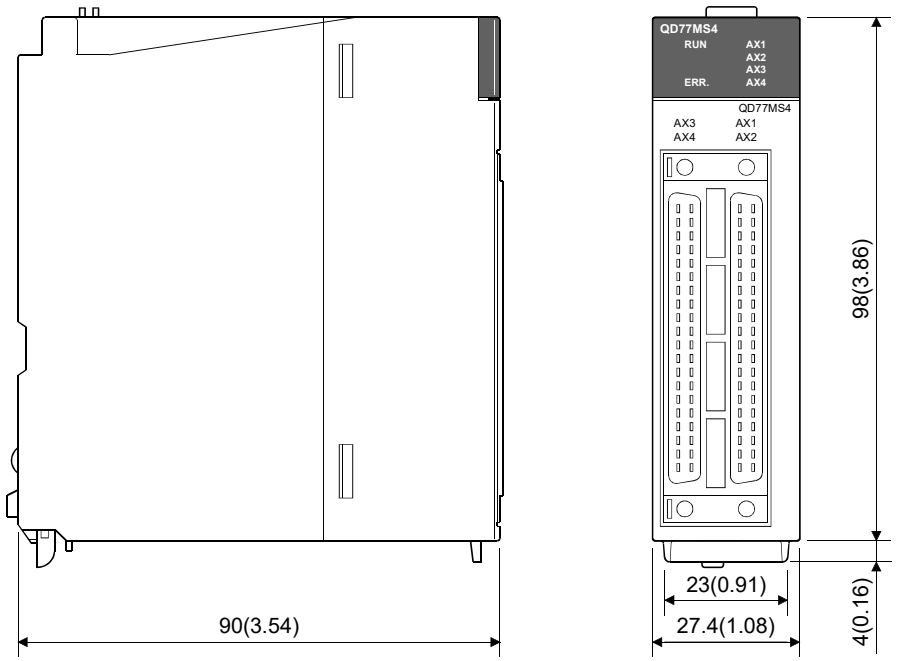

[3] QD77MS16

[Unit: mm(inch)]

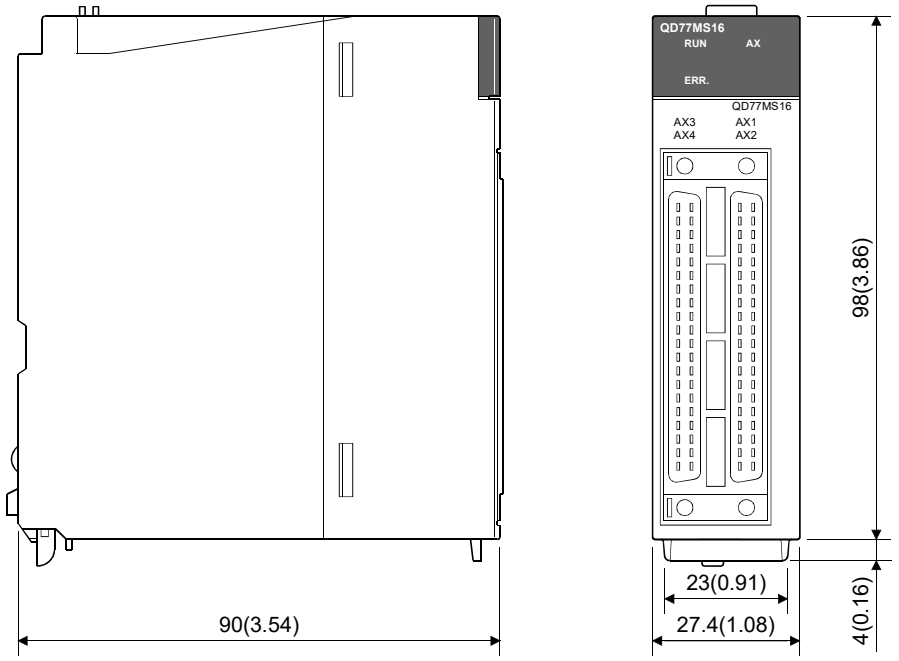

MEMO

WARRANTY

Warranty

1. Warranty period and coverage

We will repair any failure or defect hereinafter referred to as "failure" in our FA equipment hereinafter referred to as the "Product" arisen during warranty period at no charge due to causes for which we are responsible through the distributor from which you purchased the Product or our service provider. However, we will charge the actual cost of dispatching our engineer for an on-site repair work on request by customer in Japan or overseas countries. We are not responsible for any on-site readjustment and/or trial run that may be required after a defective unit is repaired or replaced.

[Term]

For terms of warranty, please contact your original place of purchase.

[Limitations]

(1) You are requested to conduct an initial failure diagnosis by yourself, as a general rule.
It can also be carried out by us or our service company upon your request and the actual cost will be charged. However, it will not be charged if we are responsible for the cause of the failure.

(2) This limited warranty applies only when the condition, method, environment, etc. of use are in compliance with the terms and conditions and instructions that are set forth in the instruction manual and user manual for the Product and the caution label affixed to the Product.

(3) Even during the term of warranty, the repair cost will be charged on you in the following cases;

1. a failure caused by your improper storing or handling, carelessness or negligence, etc., and a failure caused by your hardware or software problem
2. a failure caused by any alteration, etc. to the Product made on your side without our approval
3. a failure which may be regarded as avoidable, if your equipment in which the Product is incorporated is equipped with a safety device required by applicable laws and has any function or structure considered to be indispensable according to a common sense in the industry
4. a failure which may be regarded as avoidable if consumable parts designated in the instruction manual, etc. are duly maintained and replaced
5. any replacement of consumable parts (battery, fan, smoothing capacitor, etc.)
6. a failure caused by external factors such as inevitable accidents, including without limitation fire and abnormal fluctuation of voltage, and acts of God, including without limitation earthquake, lightning and natural disasters
7. a failure generated by an unforeseeable cause with a scientific technology that was not available at the time of the shipment of the Product from our company
8. any other failures which we are not responsible for or which you acknowledge we are not responsible for

2. Term of warranty after the stop of production

(1) We may accept the repair at charge for another seven (7) years after the production of the product is discontinued. The announcement of the stop of production for each model can be seen in our Sales and Service, etc.

(2) Please note that the Product (including its spare parts) cannot be ordered after its stop of production.

3. Service in overseas countries

Our regional FA Center in overseas countries will accept the repair work of the Product. However, the terms and conditions of the repair work may differ depending on each FA Center. Please ask your local FA center for details.

4. Exclusion of loss in opportunity and secondary loss from warranty liability

Regardless of the gratis warranty term, Mitsubishi shall not be liable for compensation to:

(1) Damages caused by any cause found not to be the responsibility of Mitsubishi.

(2) Loss in opportunity, lost profits incurred to the user by Failures of Mitsubishi products.

(3) Special damages and secondary damages whether foreseeable or not, compensation for accidents, and compensation for damages to products other than Mitsubishi products.

(4) Replacement by the user, maintenance of on-site equipment, start-up test run and other tasks.

5. Change of Product specifications

Specifications listed in our catalogs, manuals or technical documents may be changed without notice.

6. Application and use of the Product

(1) For the use of our Simple Motion module, its applications should be those that may not result in a serious damage even if any failure or malfunction occurs in the Simple Motion module, and a backup or fail-safe function should operate on an external system to the Simple Motion module when any failure or malfunction occurs.

(2) Our Simple Motion module is designed and manufactured as a general purpose product for use at general industries.
Therefore, applications substantially influential on the public interest for such as atomic power plants and other power plants of electric power companies, and also which require a special quality assurance system, including applications for railway companies and government or public offices are not recommended, and we assume no responsibility for any failure caused by these applications when used.
In addition, applications which may be substantially influential to human lives or properties for such as airlines, medical treatments, railway service, incineration and fuel systems, man-operated material handling equipment, entertainment machines, safety machines, etc. are not recommended, and we assume no responsibility for any failure caused by these applications when used.
We will review the acceptability of the above mentioned applications, if you agree not to require a specific quality for a specific application. Please contact us for consultation.

(3) Mitsubishi shall have no responsibility or liability for any problems involving programmable controller trouble and system trouble caused by DoS attacks, unauthorized access, computer viruses, and other cyberattacks.

INFORMATION AND SERVICES

For further information and services, please contact your local Mitsubishi Electric sales office or representative.
Visit our website to find our locations worldwide.

MITSUBISHI ELECTRIC Factory Automation Global Website
Locations Worldwide
www.MitsubishiElectric.com/fa/about-us/overseas/

TRADEMARKS

Microsoft and Windows are trademarks of the Microsoft group of companies.
The company names, system names and product names mentioned in this manual are either registered trademarks or trademarks of their respective companies.
In some cases, trademark symbols such as '™' or '®' are not specified in this manual.

IB(NA)-0300185-J

IB(NA)-0300185-J(2310)MEE
MODEL: QD77MS-U-S-E
MODEL CODE: 1XB947

MITSUBISHI ELECTRIC CORPORATION

HEAD OFFICE: TOKYO BLDG., 2-7-3, MARUNOUCHI, CHIYODA-KU, TOKYO 100-8310, JAPAN
NAGOYA WORKS: 1-14, YADA-MINAMI 5-CHOME, HIGASHI-KU, NAGOYA 461-8670, JAPAN

When exported from Japan, this manual does not require application to the Ministry of Economy, Trade and Industry for service transaction permission.

Specifications subject to change without notice.