# SEM3 Enclosure

*Not to scale*

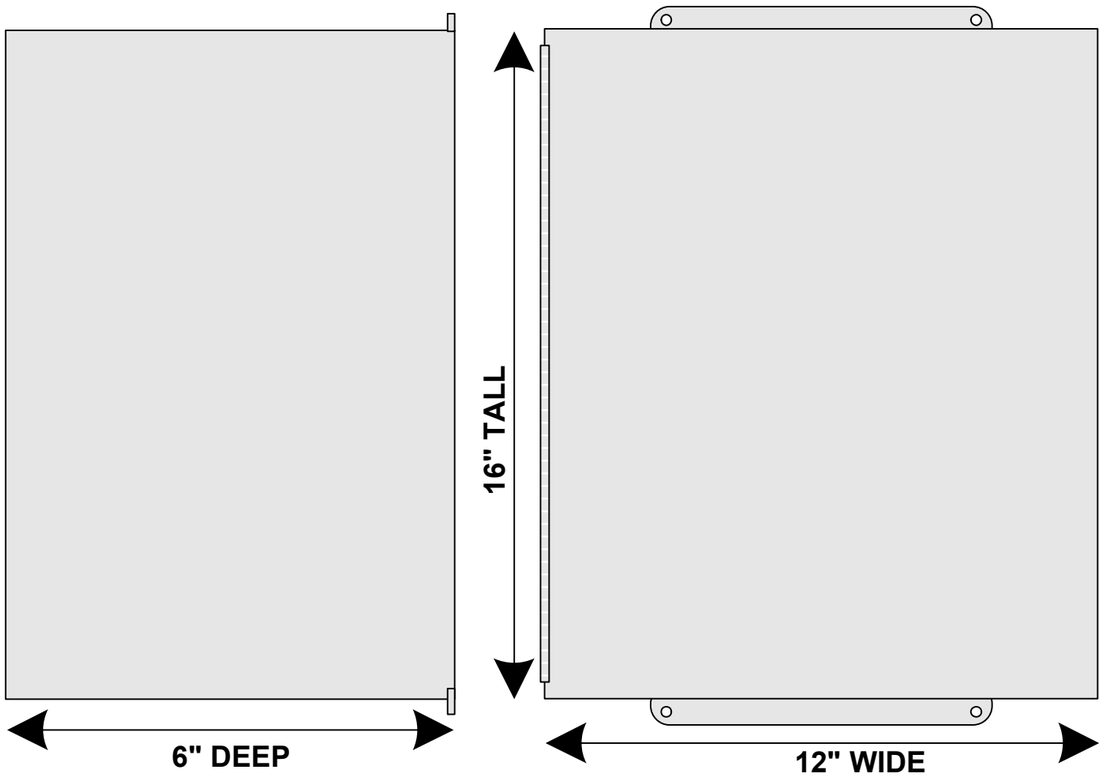


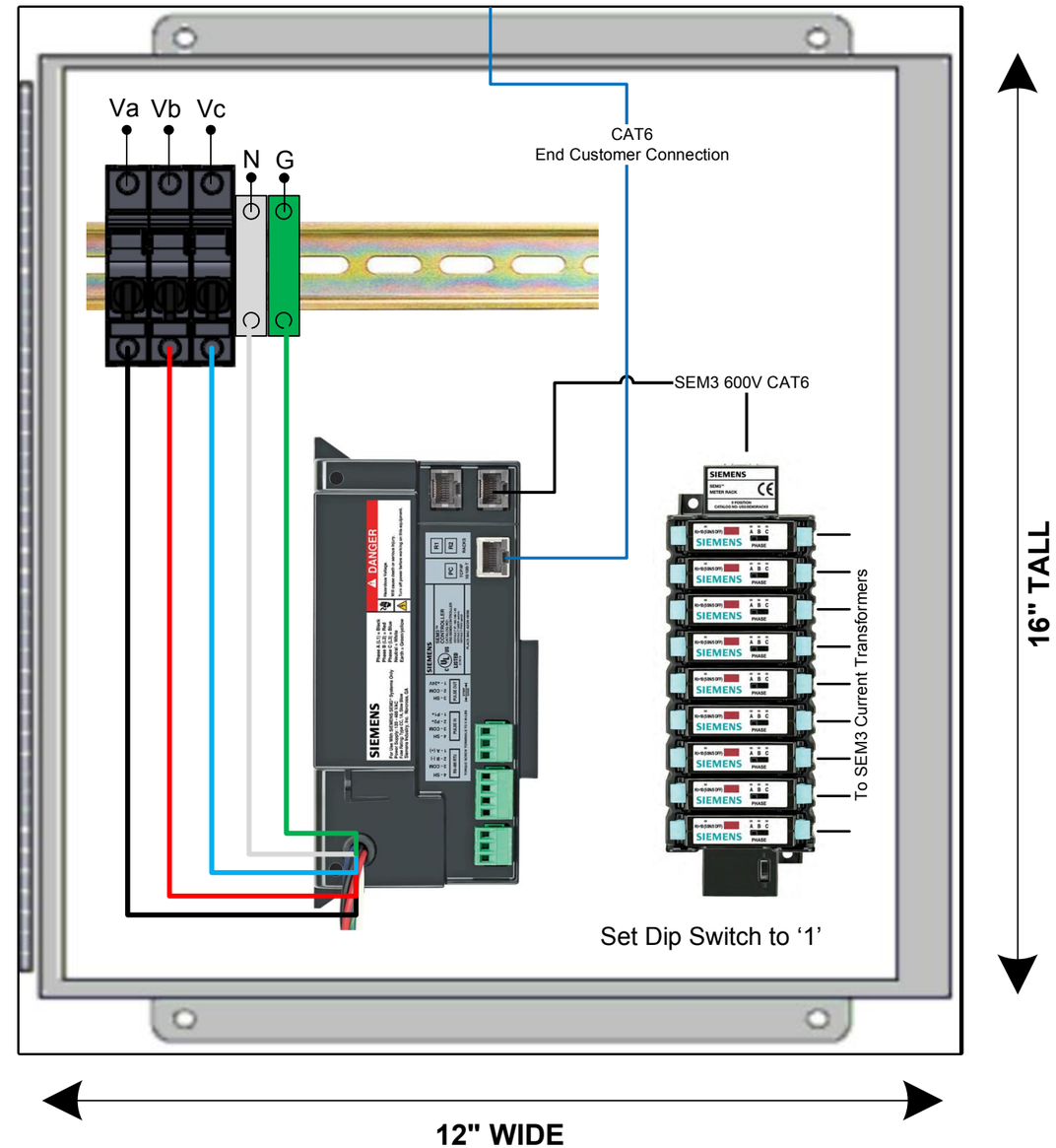


**<u>Bill of Material</u> (US2:SEM309ENCL1):**
- **NEMA1 16"X12"X6" ENCLOSURE, 100-240V control power**
- **SEM3 CONTROLLER (US2:SEM3CONTROLLER)**
- **SEM3 9 POLE RACK (US2:SEM3RACK9)**
- **SEM3 Rack Cable – 12inch (US2:SEM3CAB12INCH)**

**<u>Sold Separately:</u>**
- **(9) SEM3 1% or 0.2% ACCURACY METER MODULE**
  - **1% STANDARD ACCURACY (US2:SEM3PLAMETER)**
  - **0.2% HIGH ACCURACY (US2:SEM3PHAMETER)**
- **CAT6 Cable for Customer Connection**

| REV. | DESCRIPTION | DATE | BY |
|---|---|---|---|
| E | | | |
| D | | | |
| C | | | |
| B | | | |
| A | Initial Release | 11/17/2017 | GC |

SIEMENS

SIEMENS INDUSTRIES INC.
POWER DISTRIBUTION SOLUTIONS

| | | |
|---|---|---|
| SALES OFFICE / ENGINEER | FILENAME: SEM3 ENCLOSURES WITHOUT HMI VSD | TITLE: SEM3 ENCLOSURE – US2:SEM309ENCL1 |
| APPLICATION ENGINEER | DRAWING STATUS: EXAMPLE ONLY | DESCRIPTION: SEM3 ENCLOSURE DETAIL |
| DRAWN BY: GC | CREATION DATE: Nov. 17th | ORDER NO: / PAGE: 4 OF 21 |