Catalog Numbers, Ratings and Features

Catalog No.	Max. Branch Rating	Main Bus, 1200A Max.	Breaker Type	Meter Socket Cover	Meter Socket Type/ Continuous Rating	No. of Jaws	Bypass Type	Neutral Lug (Qty) and Wire Range	Equip Ground Lug (Qty) and Wire Range
MT11225	225A	1 Phase	QS / QP	Ring	TBB-4 / 200A	4	Test Block	(1) #4-300 kcmil	(2) #4-2/0 AWG

- TYPE 1 INDOOR ENCLOSURE
- 120/240 VOLTS AC, 1 PHASE, 3 WIRE
- 1 PHASE INPUT, 1 PHASE OUTPUT
- MOUNTING RAILS AND ADJUSTABLE BRACKETS FOR SECURE MOUNTING
- COMPLIES WITH EUSERC DWG. No. 312 AND 353

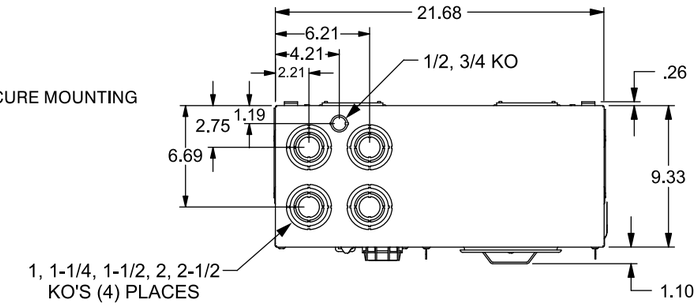

Additional Modules and Accessories

Module Description	Siemens Series#
Main Breakers	WB(M), WEB(M), WXB, BFT
Switches	WMP, WS, WES, WXS
Tap/Terminal Boxes	WTB, WET, WT_PU, WTBN, WBT
Pull Boxes	WMMB
Meter Module	(W)MM, (W)MT, (W)ML, (W)MK, (W)MLZ(F), (W)MN
Meter Combinations	WC, WCL, WCT,
Extension Box	WSP, WSPD
Bussed Elbow	BE, WELB

Connect Modules Using Quick Connect

Cat. No.	Torque
QC1 (1ph)	400-440 lb-in (35-36 ft.-lb.)

5th Jaw Accessory
Catalog Number: ECMT5

Schematic

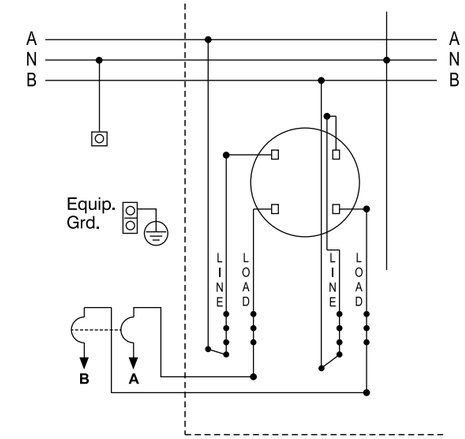

View Shown with Covers Removed

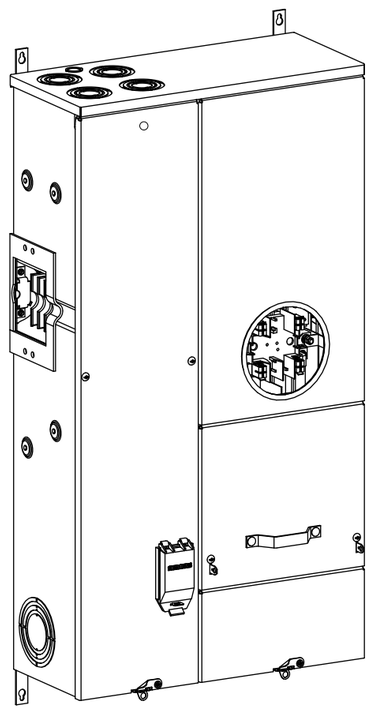

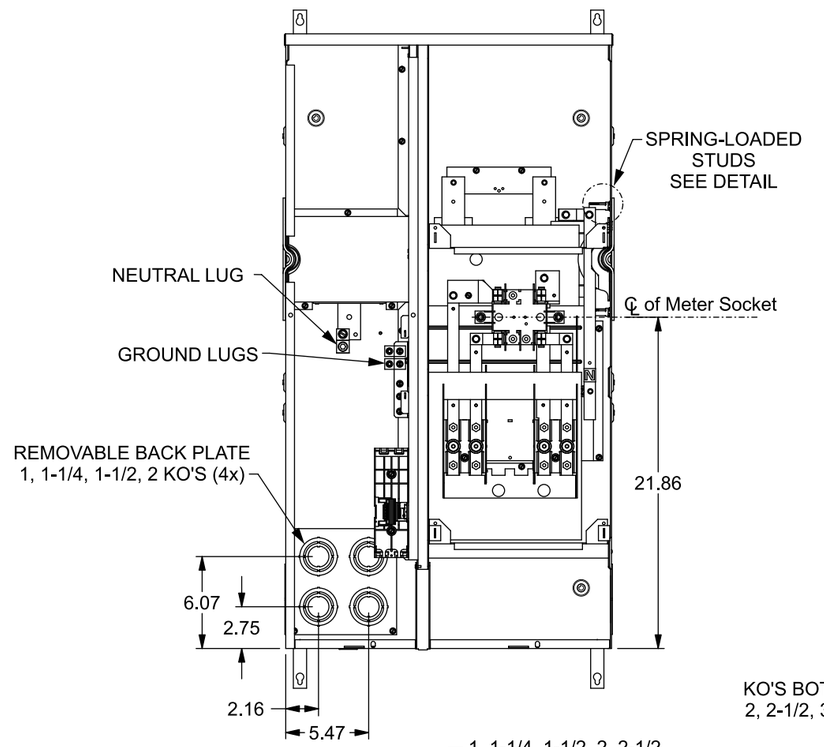

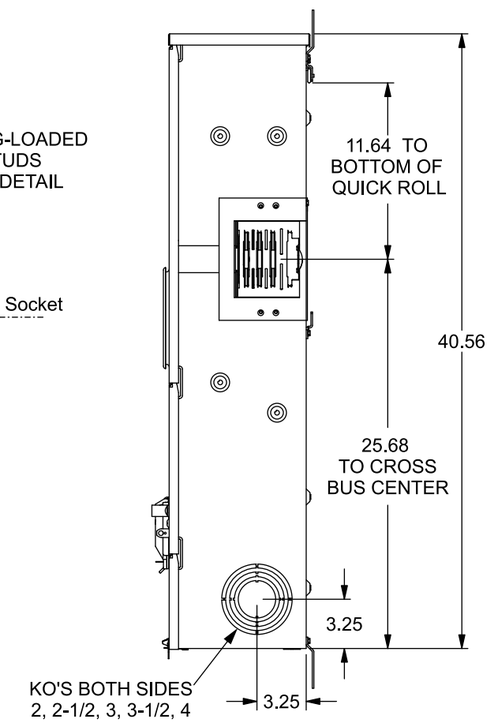

Enlarged Socket Detail

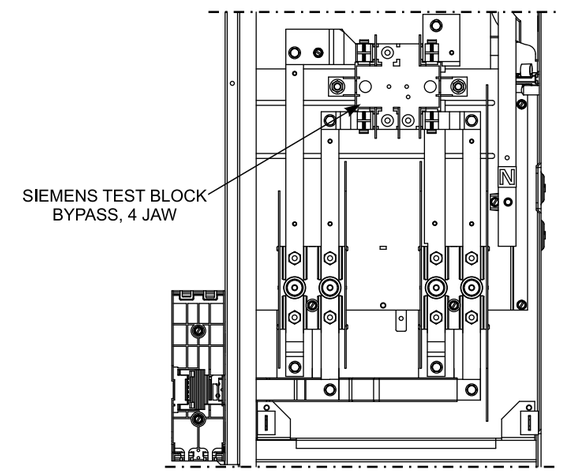

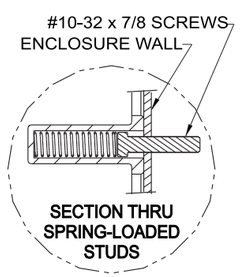

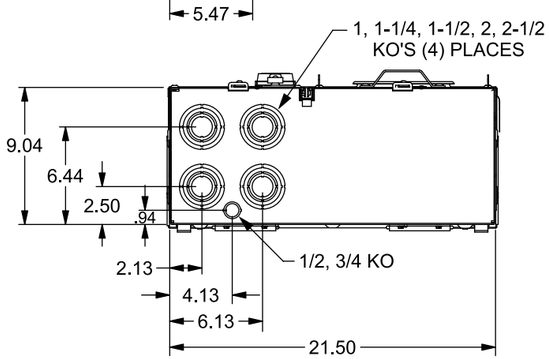

© 2018 Copyright Siemens Industry, Inc.

SIEMENS
Siemens Industry, Inc.

PowerMod™ Modular Metering

Description:
Test Block Bypass 1 Pos 225A Tenant
Indoor 1in-1out Commercial Metering Module

KAM 4/20/18	DO NOT SCALE DRAWING	Dwg No:	MT11225