SIEMENS

Manual

SENTRON

3VA Molded Case Circuit Breakers with IEC-certificate

Edition 03/2019

www.siemens.com/3VA

SIEMENS

SENTRON

Protection devices 3VA molded case circuit breakers with IEC certificate

Manual

03/2019

A5E03603177010-03

Legal information

Warning notice system

This manual contains notices you have to observe in order to ensure your personal safety, as well as to prevent damage to property. The notices referring to your personal safety are highlighted in the manual by a safety alert symbol, notices referring only to property damage have no safety alert symbol. These notices shown below are graded according to the degree of danger.

⚠DANGER
indicates that death or severe personal injury **will** result if proper precautions are not taken.

⚠WARNING
indicates that death or severe personal injury **may** result if proper precautions are not taken.

⚠CAUTION
indicates that minor personal injury can result if proper precautions are not taken.

NOTICE
indicates that property damage can result if proper precautions are not taken.

If more than one degree of danger is present, the warning notice representing the highest degree of danger will be used. A notice warning of injury to persons with a safety alert symbol may also include a warning relating to property damage.

Qualified Personnel

The product/system described in this documentation may be operated only by **personnel qualified** for the specific task in accordance with the relevant documentation, in particular its warning notices and safety instructions. Qualified personnel are those who, based on their training and experience, are capable of identifying risks and avoiding potential hazards when working with these products/systems.

Proper use of Siemens products

Note the following:

⚠WARNING
Siemens products may only be used for the applications described in the catalog and in the relevant technical documentation. If products and components from other manufacturers are used, these must be recommended or approved by Siemens. Proper transport, storage, installation, assembly, commissioning, operation and maintenance are required to ensure that the products operate safely and without any problems. The permissible ambient conditions must be complied with. The information in the relevant documentation must be observed.

Trademarks

All names identified by ® are registered trademarks of Siemens AG. The remaining trademarks in this publication may be trademarks whose use by third parties for their own purposes could violate the rights of the owner.

Disclaimer of Liability

We have reviewed the contents of this publication to ensure consistency with the hardware and software described. Since variance cannot be precluded entirely, we cannot guarantee full consistency. However, the information in this publication is reviewed regularly and any necessary corrections are included in subsequent editions.

Siemens AG
Division Energy Management
Postfach 32 20
91050 ERLANGEN
GERMANY

Document order number: 3ZW1012-0VA10-0AC1
Ⓟ 03/2019 Subject to change

Table of contents

Introduction

1

1.1 About this documentation

3VA molded case circuit breakers with certification according to standard IEC 60947

The 3VA molded case circuit breakers from the portfolio of SENTRON protection, switching, measuring and monitoring devices ensure the reliable protection of people and property as integral components of efficient power distribution systems.

The product portfolio is designed for use in markets where low-voltage switchboards are installed according to IEC standards. The 3VA molded case circuit breakers are certified according to IEC 60947 and are suitable for the following applications:

- Incoming and outgoing circuit breakers in distribution systems
- Switching and protection devices for motors (motor protection in combination with a contactor and motor protection relay)
- Switch disconnectors

The 3VA molded case circuit breakers are available in the following versions:

- For line protection: The overload and short-circuit releases are designed for the protection of wiring and non-motor loads.
- For generator protection
- For the protection of three-phase squirrel-cage motors
- For the protection of starter combinations comprising molded case circuit breaker, contactor and overload relay: In this case, the 3VA molded case circuit breaker provides the short-circuit protection and the disconnector functionality.
- As a switch disconnector in compliance with IEC 60947-3: These molded case circuit breakers can be used as main switches for opening and closing or for disconnecting load switches. They are not equipped with overload and short-circuit protection.

Scope of validity of this document

This manual has been specially compiled for the 3VA molded case circuit breakers certified to IEC 60947 and their accessory products. This manual serves as a reference manual for technical information regarding the configuration, commissioning and operation of 3VA molded case circuit breakers and their accessories.

Refer to the manual "3VA molded case circuit breakers with UL and IEC certification" (see chapter Reference documents (Page 10)) for 3VA UL molded case circuit breakers certified to UL 489.

1.2 Product-specific information

1.2.1 Target readers

Target readers of this documentation

The information contained in this manual is provided for the benefit of:

- Users
- Cubicle manufacturers
- Switchgear manufacturers
- Maintenance personnel

1.2.2 Technical Support

You can find further support on the Internet at:

Technical Support (http://www.siemens.com/lowvoltage/technical-support)

1.2.3 Reference documents

Further documents

You will find further information in the following documents:

Table 1- 1 Reference documents

Title	Article number		Link
Catalog - chapter "Molded case circuit breakers" (chapter 2 of LV 10)			3VA molded case circuit breaker catalog (https://support.industry.siemens.com/cs/ww/en/view/109750637)
Manual - 3VA27 molded case circuit breakers and 3WL10 air circuit breakers	DE	3ZW1012-0WL10-0AB1	3VA27 molded case circuit breakers manual (https://support.industry.siemens.com/cs/ww/en/view/109753821)
	EN	3ZW1012-0WL10-0AC1	
3VA UL molded case circuit breakers	DE	3ZW1012-0VA51-0AB1	3VA UL molded case circuit breakers manual (https://support.industry.siemens.com/cs/ww/en/view/109758561)
	EN	3ZW1012-0VA51-0AC1	
3VA molded case circuit breaker operating instructions			3VA molded case circuit breaker documentation (http://www.siemens.com/3VA-Documentation)

Title	Article number		Link
System manual - Communication	DE	3ZW1012-0VA20-0BB0	3VA molded case circuit breakers, communication system manual (https://support.industry.siemens.com/cs/ww/en/view/98746267)
	EN	3ZW1012-0VA20-0BC0	
3VA molded case circuit breaker tables (updated daily)			3VA molded case circuit breaker documentation (http://www.siemens.com/3VA-Documentation)
SENTRON ATC5300 - Automatic transfer switching equipment	DE	A5E02469034-01	Automatic transfer control device ATC5300 (http://support.automation.siemens.com/WW/view/de/41909986/0/en)
	EN	A5E02469035-01	
ATSE - Remote Control Software Manual	DE	A5E02469028-01	ATSE - Remote Control Software Manual (http://support.automation.siemens.com/WW/view/de/41909978)
	EN		
ATSE - Modbus Communication Protocol	DE	A5E02469001-01	ATSE - Modbus Communication Protocol (http://support.automation.siemens.com/WW/view/de/40761679)
	EN		
Grundlagen der Niederspannungsschalttechnik (Fundamentals of Low-Voltage Switchgear and Controlgear), Siemens AG © 2008	—		—
Hartmut Kiank, Wolfgang Fruth: Planungsleitfaden für Energieverteilungsanlagen (Planning Guide for Power Distribution Plants), Publicis Publishing	ISBN: A19100-L531-B115		—
Schalten, Schützen, Verteilen in Niederspannungsnetzen (Switching, Protection and Distribution in Low-Voltage Networks), substantially extended and revised edition 1997	ISBN 3-89578-041-3		—
Siemens: Residual Current Protective Devices, Low-Voltage Circuit Protection Technology Primer Siemens AG © 04 / 2009	E10003-E38-9T-B3011		—

Description

2

2.1 Overview - applications and portfolio

This chapter provides an overview of all molded case circuit breakers in the 3VA portfolio and describes the potential areas of application for different circuit breaker models.

The topics discussed in this chapter are listed below:

- Applications and possible uses
- Portfolio
- Possible configurations
- Detailed information about applications and possible uses
- Technical specifications
- Molded case circuit breakers and accessories in the system

2.1.1 Applications and possible uses

The two tables below show examples of possible uses and applications for 3VA molded case circuit breakers.

Possible uses

The 3VA molded case circuit breakers can be used in various areas where they perform different protection tasks. The following table (sorted according to breaking capacity) shows the areas in which 3VA molded case circuit breakers are used:

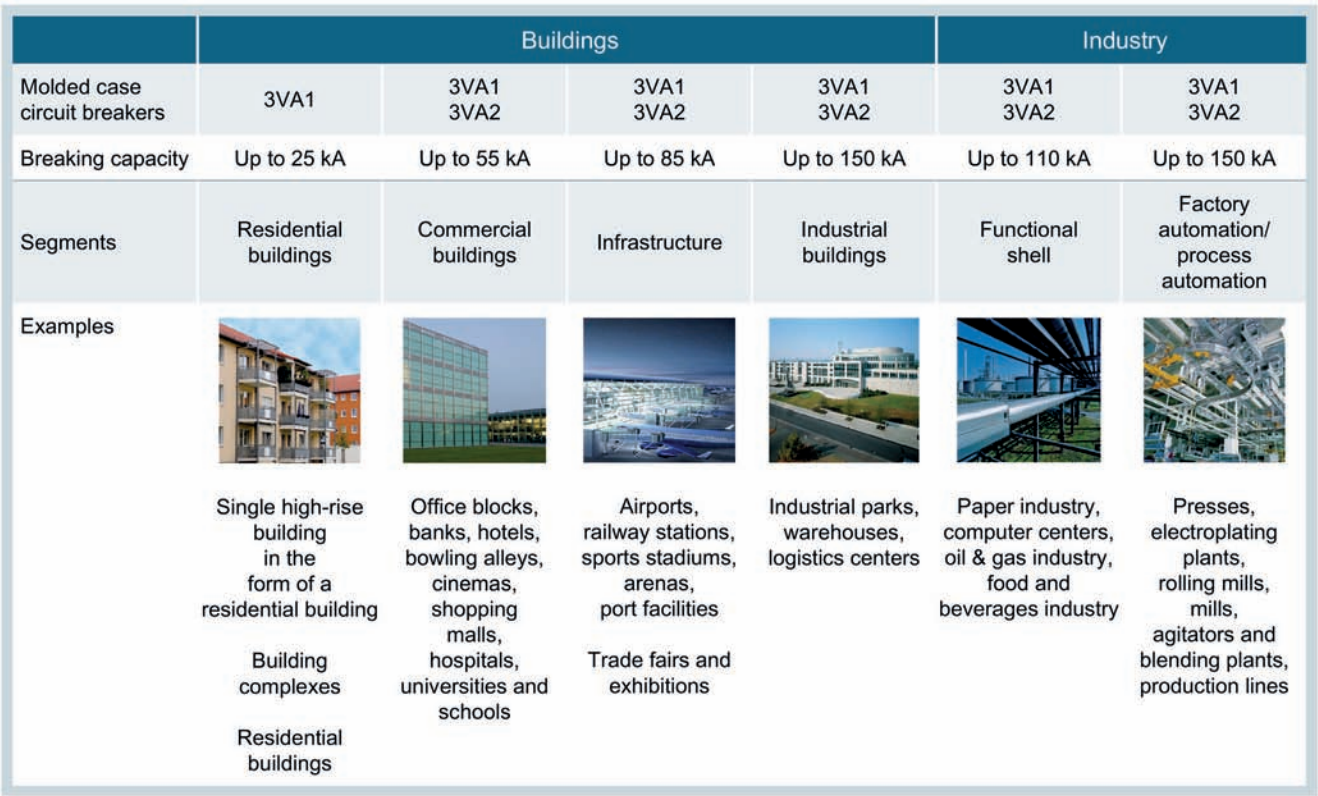

	Buildings				Industry	
Molded case circuit breakers	3VA1	3VA1 3VA2	3VA1 3VA2	3VA1 3VA2	3VA1 3VA2	3VA1 3VA2
Breaking capacity	Up to 25 kA	Up to 55 kA	Up to 85 kA	Up to 150 kA	Up to 110 kA	Up to 150 kA
Segments	Residential buildings	Commercial buildings	Infrastructure	Industrial buildings	Functional shell	Factory automation/ process automation
Examples	Single high-rise building in the form of a residential building Building complexes Residential buildings	Office blocks, banks, hotels, bowling alleys, cinemas, shopping malls, hospitals, universities and schools	Airports, railway stations, sports stadiums, arenas, port facilities Trade fairs and exhibitions	Industrial parks, warehouses, logistics centers	Paper industry, computer centers, oil & gas industry, food and beverages industry	Presses, electroplating plants, rolling mills, mills, agitators and blending plants, production lines

Functions and applications

3VA molded case circuit breakers are used for various functions as shown in the table below:

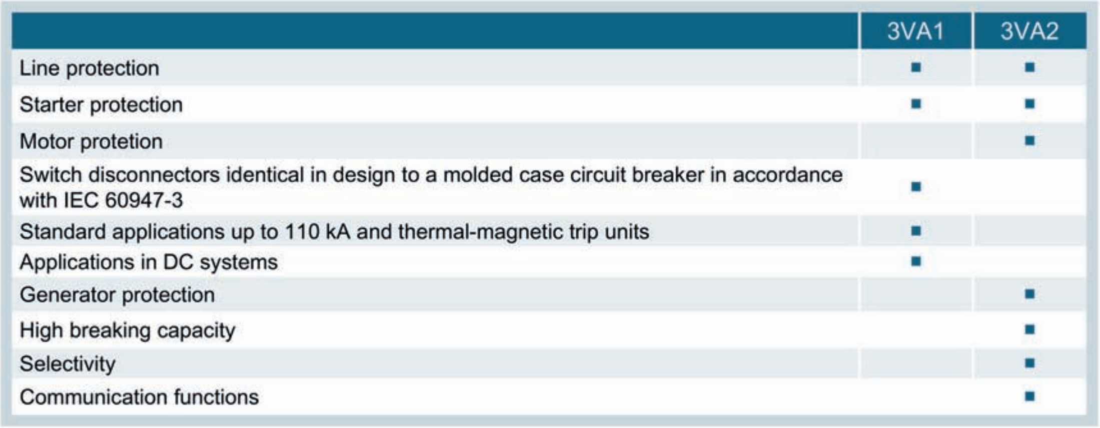

	3VA1	3VA2
Line protection	■	■
Starter protection	■	■
Motor protetion		■
Switch disconnectors identical in design to a molded case circuit breaker in accordance with IEC 60947-3	■	
Standard applications up to 110 kA and thermal-magnetic trip units	■	
Applications in DC systems	■	
Generator protection		■
High breaking capacity		■
Selectivity		■
Communication functions		■

Molded case circuit breakers are primarily designed for the following applications:

- Subdistribution systems
- Industrial distribution systems
- Final distribution systems
- On-site isolation
- Use in machines

2.1.2 Portfolio

The 3VA molded case circuit breakers set new standards in flexibility and the variety of modular accessories available. Standardized accessories suitable for use with several sizes of the 3VA molded case circuit breaker up to 1000 A together with quick and easy installation help to cut costs and save time.

Sizes

The integrated 3VA portfolio consists of two different ranges of molded case circuit breakers in twelve frame sizes. The 1600 A frame size of the 3VA2 molded case circuit breaker and the 400 A and 630 A of the 3VA1 molded case circuit breaker are new.

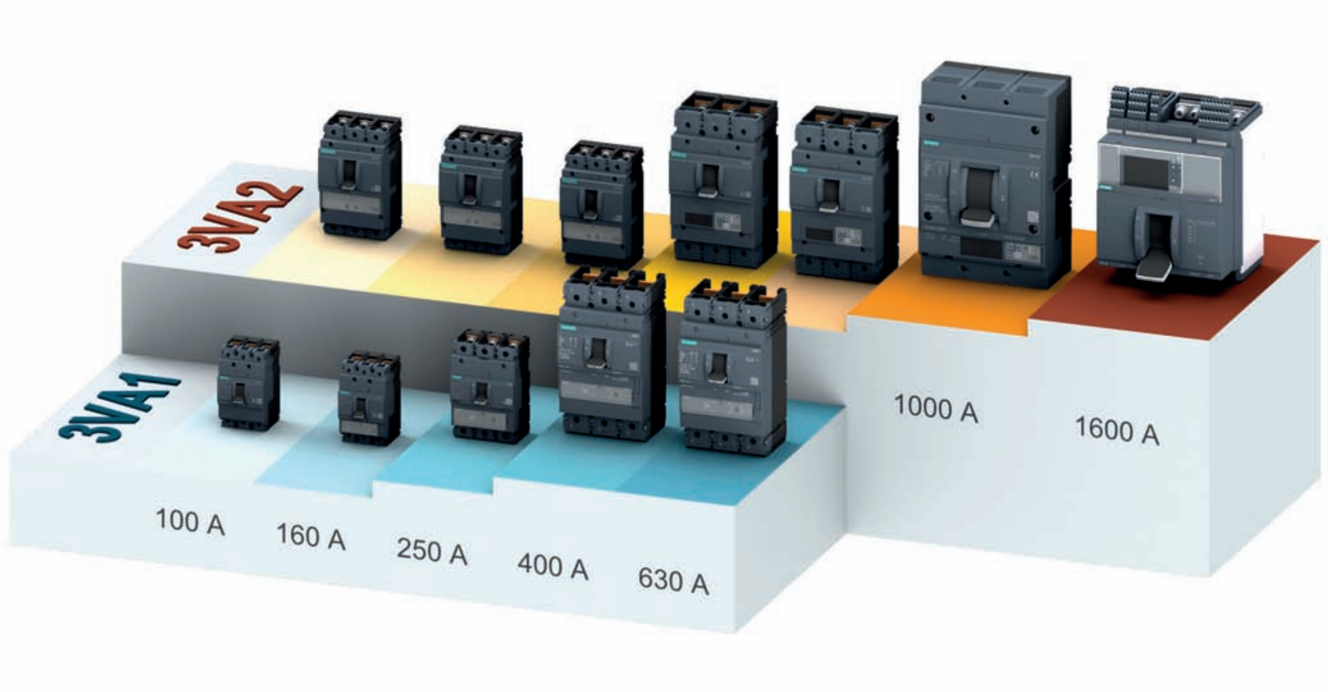

The 3VA1 molded case circuit breakers are available in 1 to 4-pole versions (3VA1 160 A) or in 3 and 4-pole versions (3VA1 100 A to 630 A). The 3VA2 molded case circuit breakers are available in 3 and 4-pole versions.

The circuit breakers are suitable for rated operational currents ranging from 16 A to 1600 A and rated voltages up to 690 V AC, depending on the range and frame size.

Note

A separate manual is available for the 1600 A size of the 3VA27 molded case circuit breaker (see chapter Reference documents (Page 10)). The rest of this manual will deal with the properties and accessory components up to 1000 A in particular.

3VA1 molded case circuit breakers

The 3VA1 molded case circuit breakers reliably perform all the tasks required for line protection.

Features

The key features of the 3VA1 range are:

- Compact design
- 1 and 2-pole versions in size 160 A; 3 and 4-pole versions in sizes 100 A, 160 A, 250 A, 400 A and 630 A
- Breaking capacity of 16 kA ... 70 kA at 415 V or 110 kA, (in sizes 400 A and 630 A), 3-pole or 4-pole breakers and 36 kA at 240 V, 1-pole breakers (dependent on size)
- Fixed-mounted, plug-in version
- Thermal-magnetic trip units
- AC/DC applications
- No derating up to +50 °C
- Modular and easy-to-fit internal accessories with diverse functions
- Uniform accessories platform across all 3VA molded case circuit breakers

Compact dimensions

Thanks to a mounting depth of 70 mm and a cover size of 45 mm, the 3VA1 molded case circuit breakers of sizes 100 A, 160 A and 250 A are optimized for installation in distribution boards, where they are used for protecting cables and lines. A wide range of accessories is also available for these applications, such as adapters for installation on DIN rails, as well as residual current devices (RCD310 and RCD510) and motor operators (MO310) that can be side mounted.

Thermal-magnetic trip units

The 3VA1 molded case circuit breakers have a thermal-magnetic trip unit with overload and short-circuit protection. This has been developed for implementing economical, cost-efficient installations up to 630 A. It is suitable for use in three-phase networks, AC networks, 400 Hz applications and with DC currents.

3VA2 molded case circuit breakers

The 3VA2 molded case circuit breakers reliably perform all the tasks associated with line and generator protection.

This range is designed for applications with more exacting requirements:

- Increased breaking capacity
- Excellent selective protection
- Integrated metering function
- Connection to a fieldbus communication system

Features

The key features of the 3VA2 range are:

- Compact dimensions
- 3 and 4-pole versions
- Four breaking capacity classes from 55 kA … 150 kA (at 415 V)
- Fixed-mounting, plug-in technology, draw-out technology
- Depending on size: Selective tripping at rated operational current difference 1 : 2.5 or with ELISA 1 trip units: 1.6
- Electronic trip units
- Communication capability (ETUs 5-series and ETUs 8-series)
- Integrated metering function (ETUs 8-series)
- AC applications
- No derating up to +50 °C
- Modular and easy-to-fit internal accessories with diverse functions
- Uniform accessories platform across all 3VA molded case circuit breakers up to 1000 A
- Electronic Trip Units (ETU) with different setting values

Compact dimensions with expanded functionality

In addition to its expanded functionality, the 3VA2 molded case circuit breaker also comes with compact dimensions for fixed mounting, as a plug-in version and a draw-out version.

A cover size of 70 mm for the door cutout (up to 630 A) and a complete selection of breaking capacity classes from 55 kA to 150 kA at 415 V AC provide the necessary flexibility for planning.

Despite its compact size, the circuit breaker offers the following benefits:

- Extremely high breaking capacity
- Extremely good selectivity
- Electronic trip units, versions with and without integrated metering function and optional fieldbus communication interface

Selective contact system

With its contact system, the 3VA2 molded case circuit breaker is designed for fast selectivity tripping. The selective contact system ensures the following:

- Dynamic instantaneous short-circuit range
- High breaking capacity
- Selective protection response of the molded case circuit breakers in relation to each other
- Selective protection response of the molded case circuit breakers in relation to other protection devices (e.g. downstream low-voltage fuses)

Electronic trip unit (ETU)

The current sensor of the 3VA2 molded case circuit breaker comprises an iron-cored transformer for the internal power supply and a Rogowski coil for precise current measurement. Each transformer can be optimized accordingly for its specific task. Thanks to the high accuracy of current measurement, the 3VA2 molded case circuit breaker is suitable for power/energy measurement. In addition, finer adjustment of ground-fault current monitoring is possible.

The electronic trip units (ETUs) provide the following protection functions:

- Overload protection L ("L" = Long-time delay)
  Adjustable in steps from 40% to 100% of the rated operational current of the molded case circuit breaker.
- Short-time delayed short-circuit protection S ("S" = Short-time delay) for time-selective response in case of a short circuit
- Instantaneous short-circuit protection I ("I" = instantaneous):
- Protection of the neutral conductor against overload and short-circuit ("N" = neutral)
- Protection against residual currents to ground ("G" = Ground fault)

Energy management and communication

The electronic trip units (ETUs) provide the following energy management and communication functions:

- Metering functions
- Transfer of measured values and status information of the circuit breaker to a higher-level communication network
- Remote parameter assignment of tripping thresholds and circuit breaker parameters
- Flexible, local digital inputs and outputs via the EFB300 external function box
- Software commissioning support with the "powerconfig" software package
- Testing and archiving with the TD300 and TD500 test devices (with powerconfig)

2.1.3 Application examples

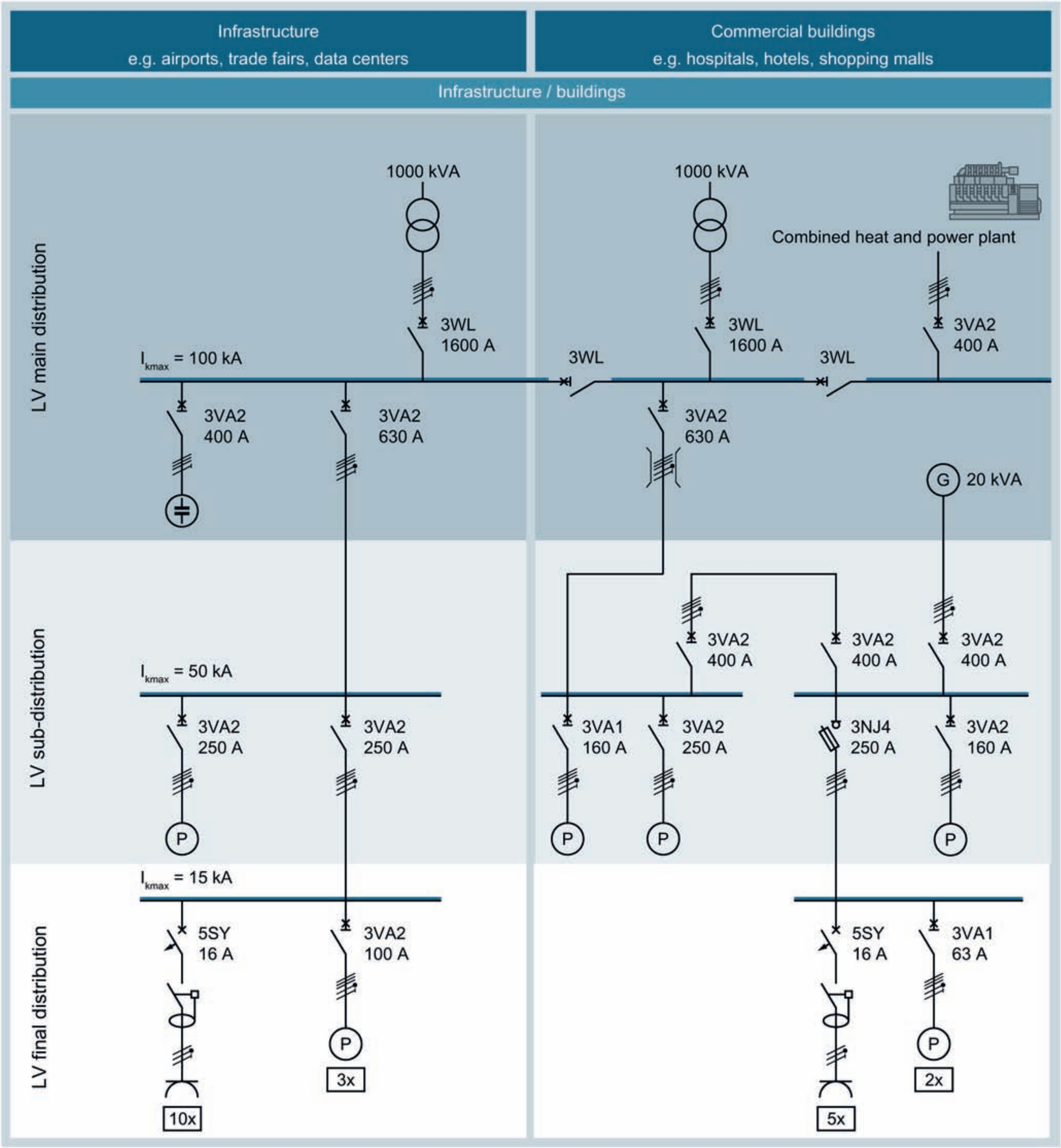

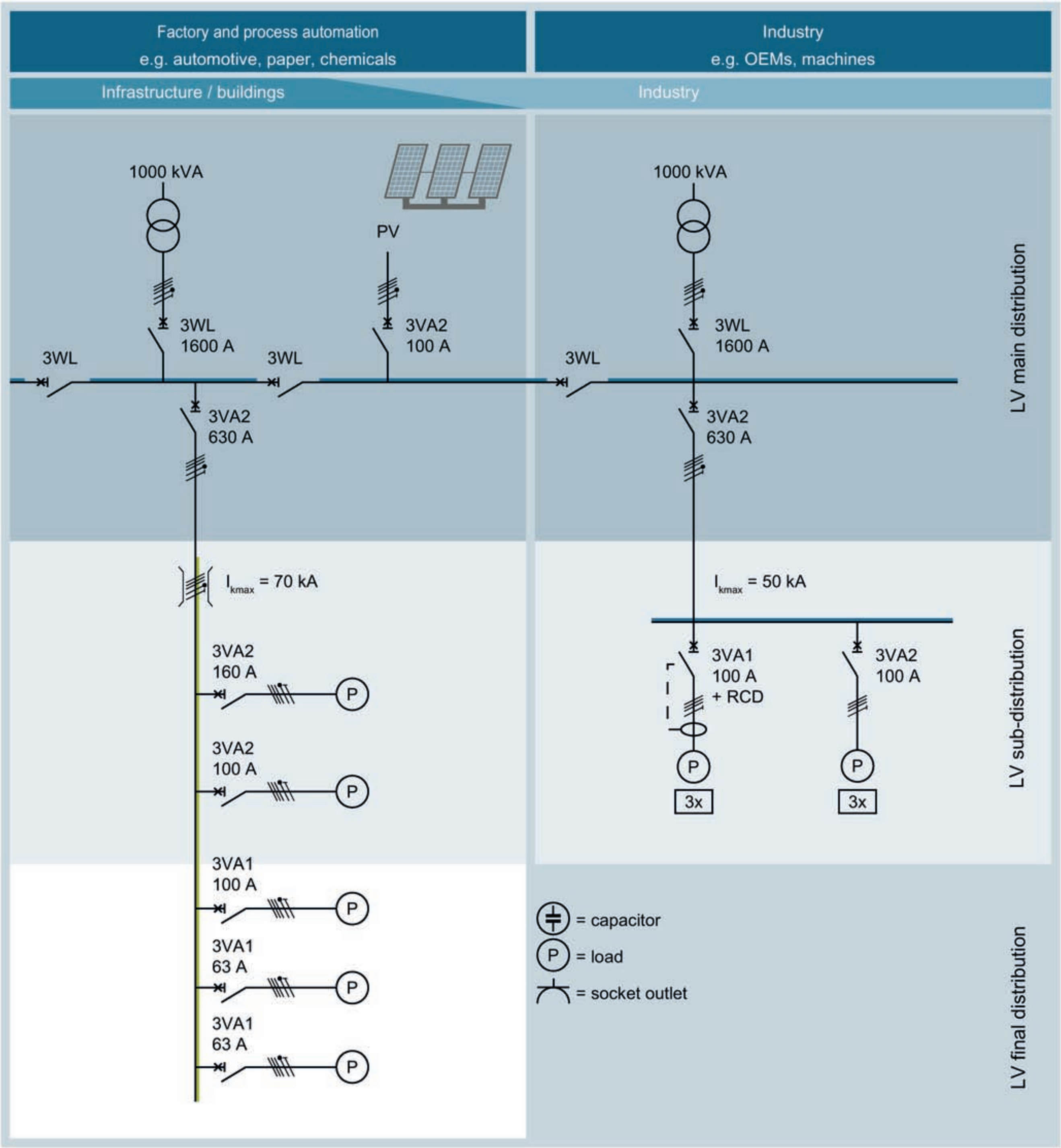
Factory and process automation
e.g. automotive, paper, chemicals
Industry
e.g. OEMs, machines
Infrastructure / buildings
Industry
1000 kVA
PV
3WL
1600 A
3WL
3WL
3VA2
100 A
3VA2
630 A
I_{kmax} = 70 kA
3VA2
160 A
P
3VA2
100 A
P
3VA1
100 A
P
3VA1
63 A
P
3VA1
63 A
P
1000 kVA
3WL
3WL
1600 A
3VA2
630 A
I_{kmax} = 50 kA
3VA1
100 A
+ RCD
3VA2
100 A
P
3x
P
3x
= capacitor
P = load
= socket outlet
LV main distribution
LV sub-distribution
LV final distribution

2.1.4 Detailed information about applications and possible uses

Application		3VA1	3VA2	Description
Line protection	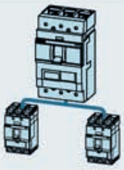	■	■	The trip units for line protection are designed to protect the following against overload and short circuits: - cables - lines - predominantly non-motorized loads
Generator protection	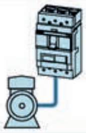		■	The trip units are set appropriately to provide protection for generators.
Motor protection	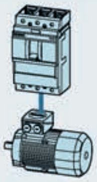		■	The overload and short-circuit releases are designed for optimized protection and direct-on-line starting of induction squirrel-cage motors. The molded case circuit breakers for motor protection have phase-failure sensitivity and a thermal image that protects the motor against overheating. The adjustable time lag class enables users to adjust the overload release to the startup conditions of the motor to be protected.
Protection for starter combinations (starter protection)	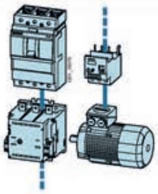	■	■	Starter combinations consist of: Molded case circuit breaker + contactor + overload relay. The molded case circuit breaker handles short-circuit protection and the isolating function. The task of the contactor is the operational switching of the feeder. The overload relay handles overload protection that can be specially matched to the motor. The molded case circuit breaker for the starter combination is therefore equipped with an adjustable and instantaneous short-circuit release.
Residual current protection	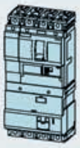	■	■	Residual current devices afford fault protection (formerly referred to as: protection in case of indirect contact) and supplementary protection (formerly referred to as: protection in case of direct contact) in low-voltage systems in the event of failure of the basic insulation or contact with live parts. Their task is to prevent or reduce injury to personnel or livestock, or damage to property.
Transfer switches	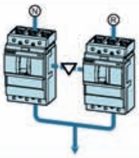	■	■	Transfer switches switch loads between two mutually independent supply systems. The purpose of transfer switches is to ensure a continuous power supply to the installation following failure of the normal power supply.
Switch disconnector		■		Switch disconnectors are capable of switching equipment and parts of electrical installations when they are conducting their operational current under normal operating conditions. A switch disconnector isolates individual circuits or items of equipment so that maintenance or repair work can be carried out. The switch disconnectors comply with IEC / EN 60947-3.

See also

Applications (Page 109)

2.1.5 Technical specifications

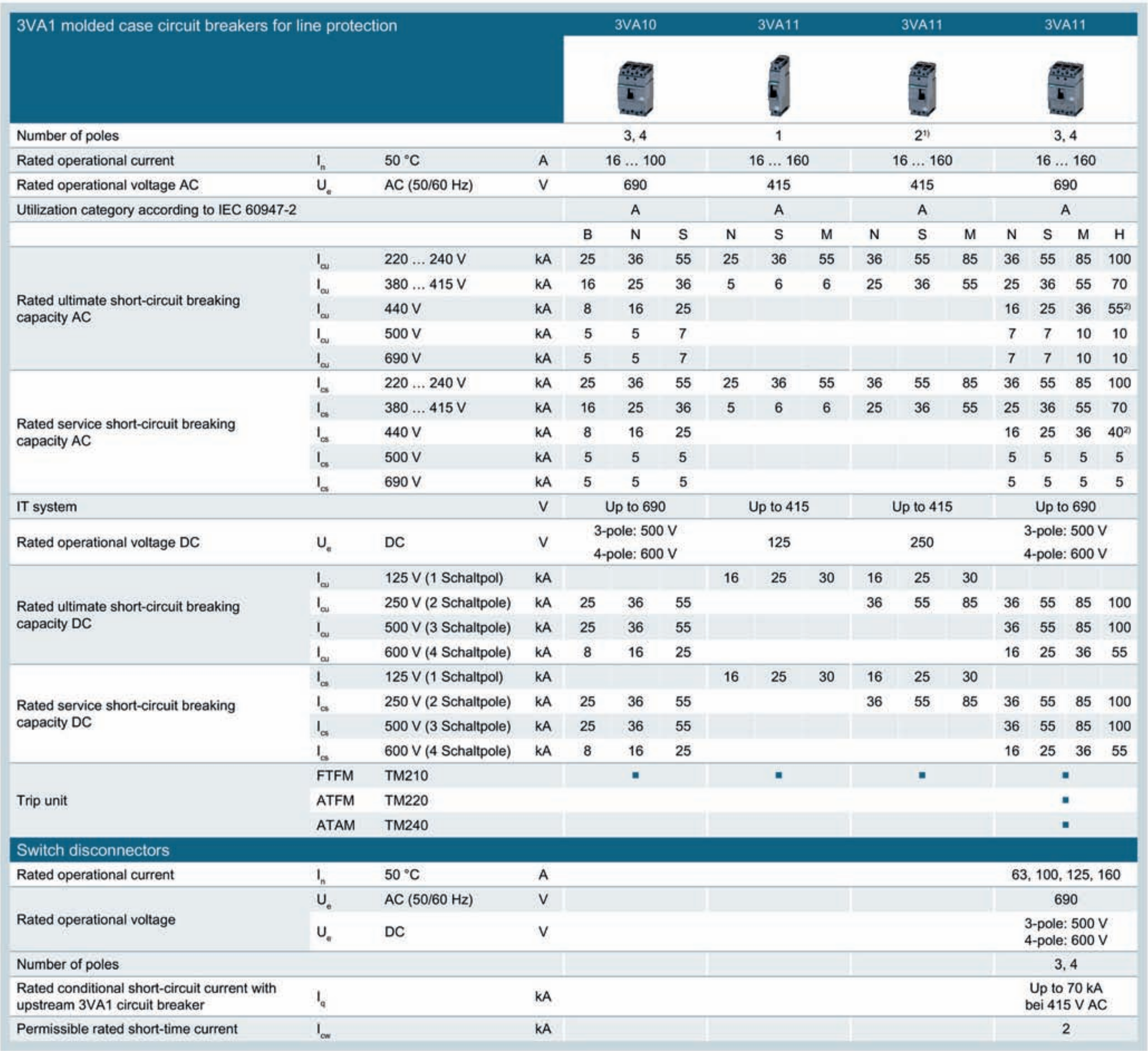

3VA1 molded case circuit breakers for line protection				3VA10			3VA11			3VA11			3VA11			
Number of poles				3, 4			1			2[1]			3, 4			
Rated operational current	I_n	50 °C	A	16 … 100			16 … 160			16 … 160			16 … 160			
Rated operational voltage AC	U_e	AC (50/60 Hz)	V	690			415			415			690			
Utilization category according to IEC 60947-2				A			A			A			A			
				B	N	S	N	S	M	N	S	M	N	S	M	H
Rated ultimate short-circuit breaking capacity AC	I_{cu}	220 … 240 V	kA	25	36	55	25	36	55	36	55	85	36	55	85	100
	I_{cu}	380 … 415 V	kA	16	25	36	5	6	6	25	36	55	25	36	55	70
	I_{cu}	440 V	kA	8	16	25							16	25	36	55[2]
	I_{cu}	500 V	kA	5	5	7							7	7	10	10
	I_{cu}	690 V	kA	5	5	7							7	7	10	10
Rated service short-circuit breaking capacity AC	I_{cs}	220 … 240 V	kA	25	36	55	25	36	55	36	55	85	36	55	85	100
	I_{cs}	380 … 415 V	kA	16	25	36	5	6	6	25	36	55	25	36	55	70
	I_{cs}	440 V	kA	8	16	25							16	25	36	40[2]
	I_{cs}	500 V	kA	5	5	5							5	5	5	5
	I_{cs}	690 V	kA	5	5	5							5	5	5	5
IT system			V	Up to 690			Up to 415			Up to 415			Up to 690			
Rated operational voltage DC	U_e	DC	V	3-pole: 500 V 4-pole: 600 V			125			250			3-pole: 500 V 4-pole: 600 V			
Rated ultimate short-circuit breaking capacity DC	I_{cu}	125 V (1 Schaltpol)	kA				16	25	30	16	25	30				
	I_{cu}	250 V (2 Schaltpole)	kA	25	36	55				36	55	85	36	55	85	100
	I_{cu}	500 V (3 Schaltpole)	kA	25	36	55							36	55	85	100
	I_{cu}	600 V (4 Schaltpole)	kA	8	16	25							16	25	36	55
Rated service short-circuit breaking capacity DC	I_{cs}	125 V (1 Schaltpol)	kA				16	25	30	16	25	30				
	I_{cs}	250 V (2 Schaltpole)	kA	25	36	55				36	55	85	36	55	85	100
	I_{cs}	500 V (3 Schaltpole)	kA	25	36	55							36	55	85	100
	I_{cs}	600 V (4 Schaltpole)	kA	8	16	25							16	25	36	55
Trip unit	FTFM	TM210		■			■			■			■			
	ATFM	TM220											■			
	ATAM	TM240											■			
Switch disconnectors																
Rated operational current	I_n	50 °C	A										63, 100, 125, 160			
Rated operational voltage	U_e	AC (50/60 Hz)	V										690			
	U_e	DC	V										3-pole: 500 V 4-pole: 600 V			
Number of poles													3, 4			
Rated conditional short-circuit current with upstream 3VA1 circuit breaker	I_q		kA										Up to 70 kA bei 415 V AC			
Permissible rated short-time current	I_{cw}		kA										2			

[1] A side plate must be installed (see chapter Insulating measures (Page 246)) if the installation conditions on the right-hand side are such that the device is not finger-safe.

[2] I_n 125 A, 160 A: I_{cu} / I_{cs} = 36 kA / 36 kA

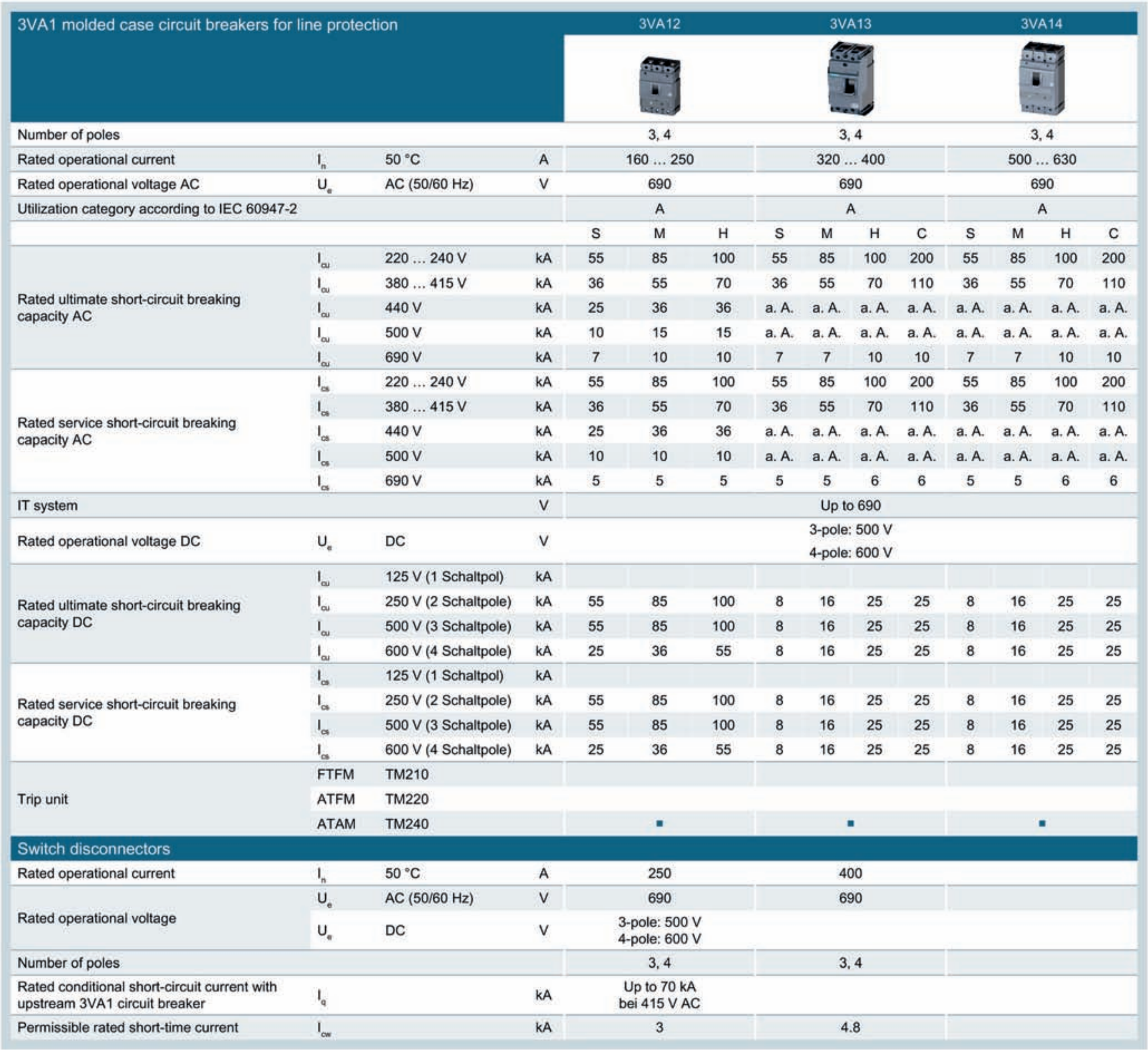

3VA1 molded case circuit breakers for line protection				3VA12			3VA13				3VA14			
Number of poles				3, 4			3, 4				3, 4			
Rated operational current	I_n	50 °C	A	160 … 250			320 … 400				500 … 630			
Rated operational voltage AC	U_e	AC (50/60 Hz)	V	690			690				690			
Utilization category according to IEC 60947-2				A			A				A			
				S	M	H	S	M	H	C	S	M	H	C
Rated ultimate short-circuit breaking capacity AC	I_{cu}	220 … 240 V	kA	55	85	100	55	85	100	200	55	85	100	200
	I_{cu}	380 … 415 V	kA	36	55	70	36	55	70	110	36	55	70	110
	I_{cu}	440 V	kA	25	36	36	a. A.	a. A.	a. A.	a. A.	a. A.	a. A.	a. A.	a. A.
	I_{cu}	500 V	kA	10	15	15	a. A.	a. A.	a. A.	a. A.	a. A.	a. A.	a. A.	a. A.
	I_{cu}	690 V	kA	7	10	10	7	7	10	10	7	7	10	10
Rated service short-circuit breaking capacity AC	I_{cs}	220 … 240 V	kA	55	85	100	55	85	100	200	55	85	100	200
	I_{cs}	380 … 415 V	kA	36	55	70	36	55	70	110	36	55	70	110
	I_{cs}	440 V	kA	25	36	36	a. A.	a. A.	a. A.	a. A.	a. A.	a. A.	a. A.	a. A.
	I_{cs}	500 V	kA	10	10	10	a. A.	a. A.	a. A.	a. A.	a. A.	a. A.	a. A.	a. A.
	I_{cs}	690 V	kA	5	5	5	5	5	6	6	5	5	6	6
IT system			V	Up to 690										
Rated operational voltage DC	U_e	DC	V	3-pole: 500 V 4-pole: 600 V										
Rated ultimate short-circuit breaking capacity DC	I_{cu}	125 V (1 Schaltpol)	kA											
	I_{cu}	250 V (2 Schaltpole)	kA	55	85	100	8	16	25	25	8	16	25	25
	I_{cu}	500 V (3 Schaltpole)	kA	55	85	100	8	16	25	25	8	16	25	25
	I_{cu}	600 V (4 Schaltpole)	kA	25	36	55	8	16	25	25	8	16	25	25
Rated service short-circuit breaking capacity DC	I_{cs}	125 V (1 Schaltpol)	kA											
	I_{cs}	250 V (2 Schaltpole)	kA	55	85	100	8	16	25	25	8	16	25	25
	I_{cs}	500 V (3 Schaltpole)	kA	55	85	100	8	16	25	25	8	16	25	25
	I_{cs}	600 V (4 Schaltpole)	kA	25	36	55	8	16	25	25	8	16	25	25
Trip unit	FTFM	TM210												
	ATFM	TM220												
	ATAM	TM240		■			■				■			
Switch disconnectors														
Rated operational current	I_n	50 °C	A	250			400							
Rated operational voltage	U_e	AC (50/60 Hz)	V	690			690							
	U_e	DC	V	3-pole: 500 V 4-pole: 600 V										
Number of poles				3, 4			3, 4							
Rated conditional short-circuit current with upstream 3VA1 circuit breaker	I_q		kA	Up to 70 kA bei 415 V AC										
Permissible rated short-time current	I_{cw}		kA	3			4.8							

a. A. On request

3VA2 molded case circuit breakers for line protection				3VA20				3VA21				3VA22			
															
Number of poles				3, 4				3, 4				3, 4			
Rated operational current	I_n	50 °C	A	25 … 100				25 … 160				160 … 250			
Rated operational voltage AC	U_e	AC (50/60 Hz)	V	690				690				690			
Utilization category according to IEC 60947-2				A				A				A			
				M	H	C	L	M	H	C	L	M	H	C	L
Rated ultimate short-circuit breaking capacity AC	I_{cu}	220 … 240 V / 50 Hz	kA	85	110	150	200	85	110	150	200	85	110	150	200
	I_{cu}	380 … 415 V / 50 Hz	kA	55	85	110	150	55	85	110	150	55	85	110	150
	I_{cu}	440 V / 50 Hz	kA	55	85	110	150	55	85	110	150	55	85	110	150
	I_{cu}	500 V / 50 Hz	kA	36	55	85	100	36	55	85	100	36	55	85	100
	I_{cu}	690 V / 50 Hz	kA	2	2	2	24	2.5	2.5	2.5	24	3	3	3	24
Rated service short-circuit breaking capacity AC	I_{cs}	220 … 240 V / 50 Hz	kA	85	110	150	200	85	110	150	200	85	110	150	200
	I_{cs}	380 … 415 V / 50 Hz	kA	55	85	110	150	55	85	110	150	55	85	110	150
	I_{cs}	440 V / 50 Hz	kA	55	85	110	150	55	85	110	150	55	85	110	150
	I_{cs}	500 V / 50 Hz	kA	36	55	85	100	36	55	85	100	36	55	85	100
	I_{cs}	690 V / 50 Hz	kA	2	2	2	18	2.5	2.5	2.5	18	3	3	3	18
IT system			V	Up to 690											
Trip unit	LI	ETU320		■				■				■			
	LIG	ETU330		■				■				■			
	LSI	ETU350		■				■				■			
	LSI	ETU550/ETU850		■				■				■			
	LSIG	ETU560/ETU860		■				■				■			

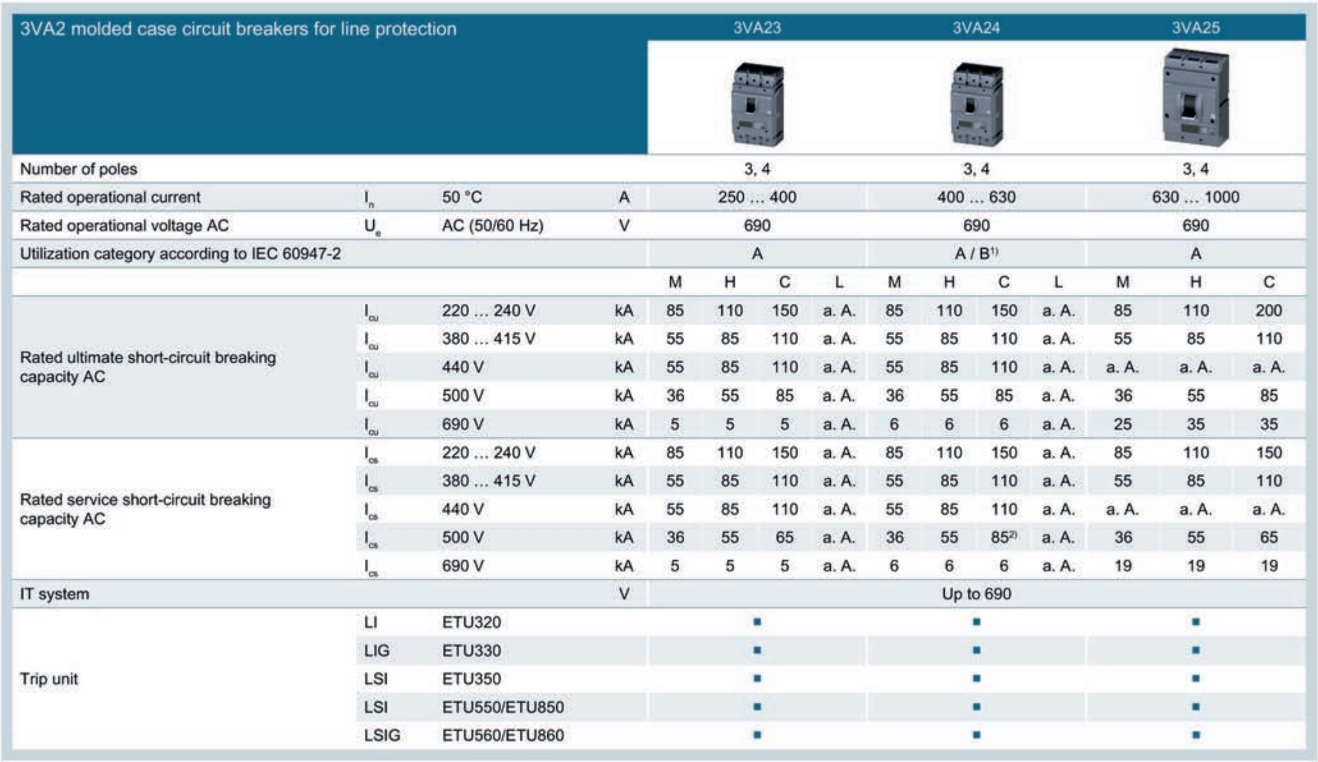

3VA2 molded case circuit breakers for line protection				3VA23				3VA24				3VA25		
Number of poles				3, 4				3, 4				3, 4		
Rated operational current	I_n	50 °C	A	250 … 400				400 … 630				630 … 1000		
Rated operational voltage AC	U_e	AC (50/60 Hz)	V	690				690				690		
Utilization category according to IEC 60947-2				A				A / B[1]				A		
				M	H	C	L	M	H	C	L	M	H	C
Rated ultimate short-circuit breaking capacity AC	I_{cu}	220 … 240 V	kA	85	110	150	a. A.	85	110	150	a. A.	85	110	200
	I_{cu}	380 … 415 V	kA	55	85	110	a. A.	55	85	110	a. A.	55	85	110
	I_{cu}	440 V	kA	55	85	110	a. A.	55	85	110	a. A.	a. A.	a. A.	a. A.
	I_{cu}	500 V	kA	36	55	85	a. A.	36	55	85	a. A.	36	55	85
	I_{cu}	690 V	kA	5	5	5	a. A.	6	6	6	a. A.	25	35	35
Rated service short-circuit breaking capacity AC	I_{cs}	220 … 240 V	kA	85	110	150	a. A.	85	110	150	a. A.	85	110	150
	I_{cs}	380 … 415 V	kA	55	85	110	a. A.	55	85	110	a. A.	55	85	110
	I_{cs}	440 V	kA	55	85	110	a. A.	55	85	110	a. A.	a. A.	a. A.	a. A.
	I_{cs}	500 V	kA	36	55	65	a. A.	36	55	85[2]	a. A.	36	55	65
	I_{cs}	690 V	kA	5	5	5	a. A.	6	6	6	a. A.	19	19	19
IT system			V	Up to 690										
Trip unit	LI	ETU320		■				■				■		
	LIG	ETU330		■				■				■		
	LSI	ETU350		■				■				■		
	LSI	ETU550/ETU850		■				■				■		
	LSIG	ETU560/ETU860		■				■				■		

a. A. On request

[1] Utilization category B only for 400 A and 500 A and ETUs 5-series 8-series

[2] I_n 400/500 A and I_n 630 A: I_{cs} = 65 kA

2.1.6 Molded case circuit breakers and accessories in the system

The 3VA molded case circuit breakers come with a large portfolio of internal and external accessories that can be installed flexibly in any size of circuit breaker (depending on the type of accessory).

The table below indicates which accessories are compatible with particular molded case circuit breakers, and which sizes of breakers are compatible with the same accessory:

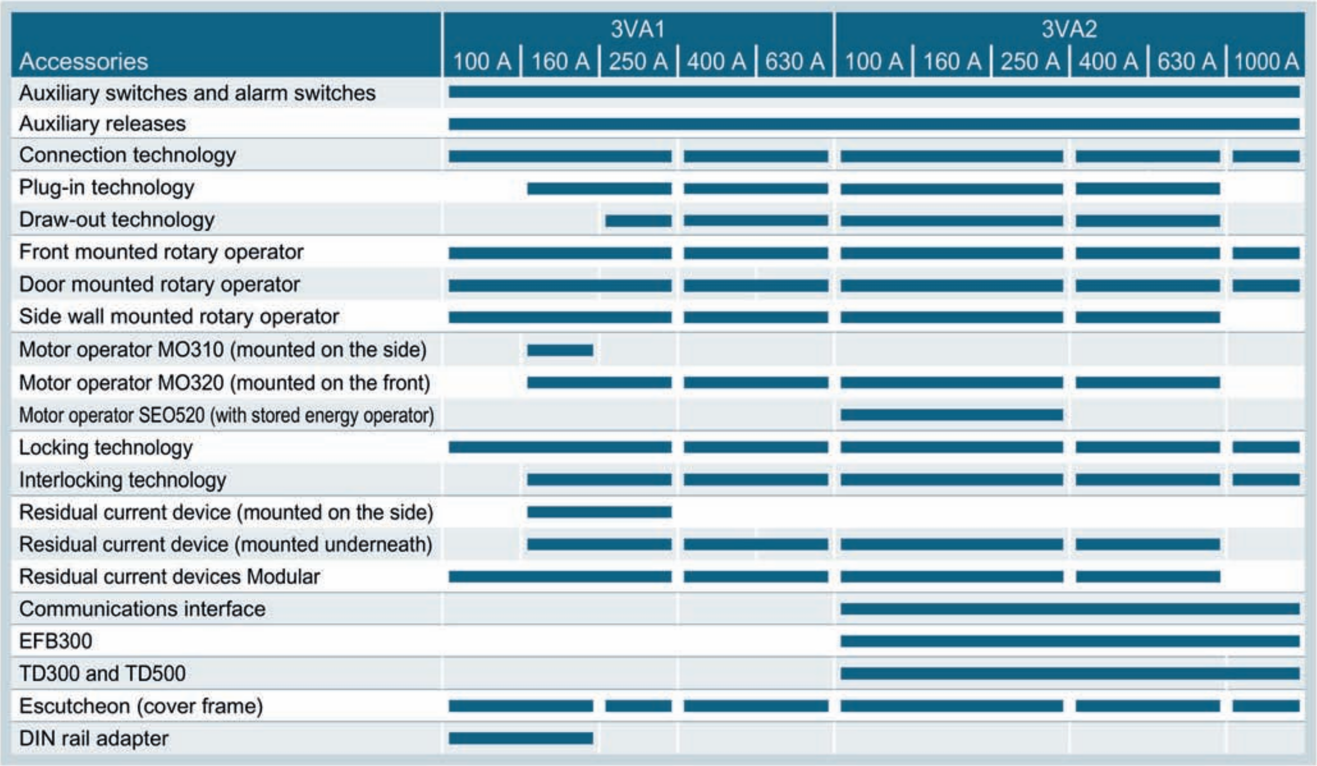

	3VA1					3VA2					
Accessories	100 A	160 A	250 A	400 A	630 A	100 A	160 A	250 A	400 A	630 A	1000 A
Auxiliary switches and alarm switches	■	■	■	■	■	■	■	■	■	■	■
Auxiliary releases	■	■	■	■	■	■	■	■	■	■	■
Connection technology	■	■	■	■	■	■	■	■	■	■	■
Plug-in technology		■	■	■	■	■	■	■	■	■	
Draw-out technology			■	■	■	■	■	■	■	■	
Front mounted rotary operator	■	■	■	■	■	■	■	■	■	■	■
Door mounted rotary operator	■	■	■	■	■	■	■	■	■	■	■
Side wall mounted rotary operator	■	■	■	■	■	■	■	■	■	■	
Motor operator MO310 (mounted on the side)		■									
Motor operator MO320 (mounted on the front)		■	■	■	■	■	■	■	■	■	
Motor operator SEO520 (with stored energy operator)						■	■	■			
Locking technology	■	■	■	■	■	■	■	■	■	■	■
Interlocking technology		■	■	■	■	■	■	■	■	■	■
Residual current device (mounted on the side)		■	■								
Residual current device (mounted underneath)		■	■	■	■	■	■	■	■	■	
Residual current devices Modular	■	■	■	■	■	■	■	■	■	■	
Communications interface						■	■	■	■	■	■
EFB300						■	■	■	■	■	■
TD300 and TD500						■	■	■	■	■	■
Escutcheon (cover frame)	■	■	■	■	■	■	■	■	■	■	■
DIN rail adapter	■	■									

Overview of accessories in the system

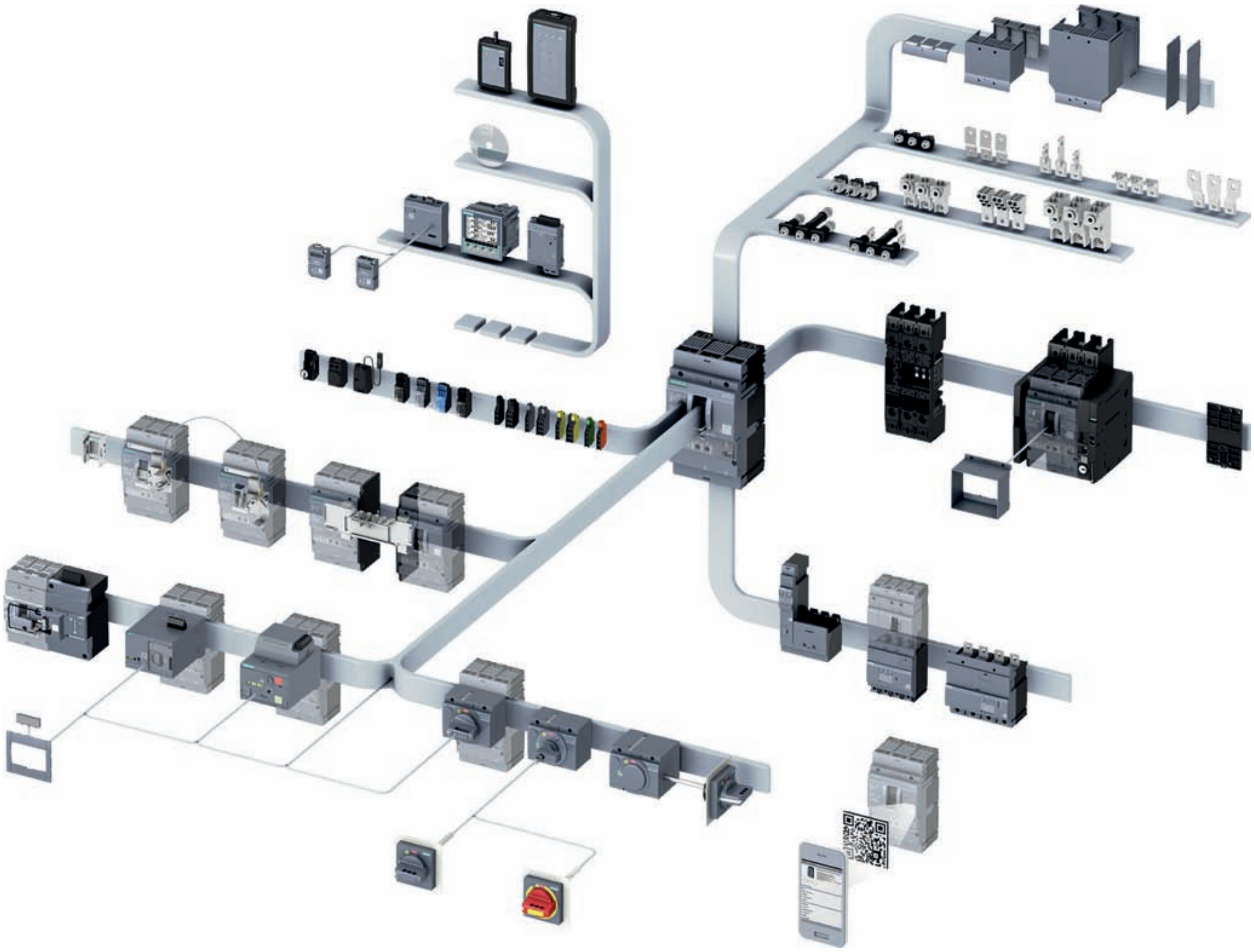

2.2 Ergonomic design

This chapter provides an overview of the ergonomic design features of the 3VA molded case circuit breakers and explains what makes them so special.

The topics discussed in this chapter are listed below:

- Optional installation variants
- Color-coded indication of switching position in the draw-out unit
- Clear status indication
- Active illumination
- Ergonomic handle
- Color-coded control elements
- Broad range of accessories
- Connection options

Integrated system

The 3VA molded case circuit breakers set new standards, not only in terms of their technical features and functional scope, but also in terms of their design.

The 3VA range provides an integrated system with regard to operation, functionality and installation. This principle is embodied in the basic units and in all internal and external accessories.

The internal and external accessories of the 3VA molded case circuit breakers offer the following benefits:

- Standardized methods of operation
- Standardized scope of functions
- Standardized installation procedures
- Uniform accessories from 16 A … 1000 A (e.g. auxiliary switches, auxiliary releases, etc.)

2.2.1 The right circuit breaker for any installation conditions

The range of molded case circuit breakers can be equipped with additional components so that they can be installed as fully functional switches in any location, a feature of the product which affords maximum flexibility to system planners.

The following components can be installed to suit the installation location:

- Front mounted rotary operator
- Door mounted rotary operator
- Side wall mounted rotary operator
- Motor operator

When the 3VA molded case circuit breaker is in the OFF position, it reliably disconnects all current paths of the circuit in accordance with IEC 60947-2 and IEC 60204-1 (VDE 0113). In the event of overvoltage between input and output, the reduced clearances prevent leakage currents at the surface and ensure that the dielectric strength is not degraded. The 3VA molded case circuit breaker therefore also meets the requirements for disconnector units according to IEC 60204-1.

The main switch or disconnector unit functionality is not diminished by installation of the following accessory components:

- Plug-in and draw-out units
- Manual operator
- Motor operator
- Residual current device

Optional installation variants

3VA molded case circuit breakers are available in the following installation variants:

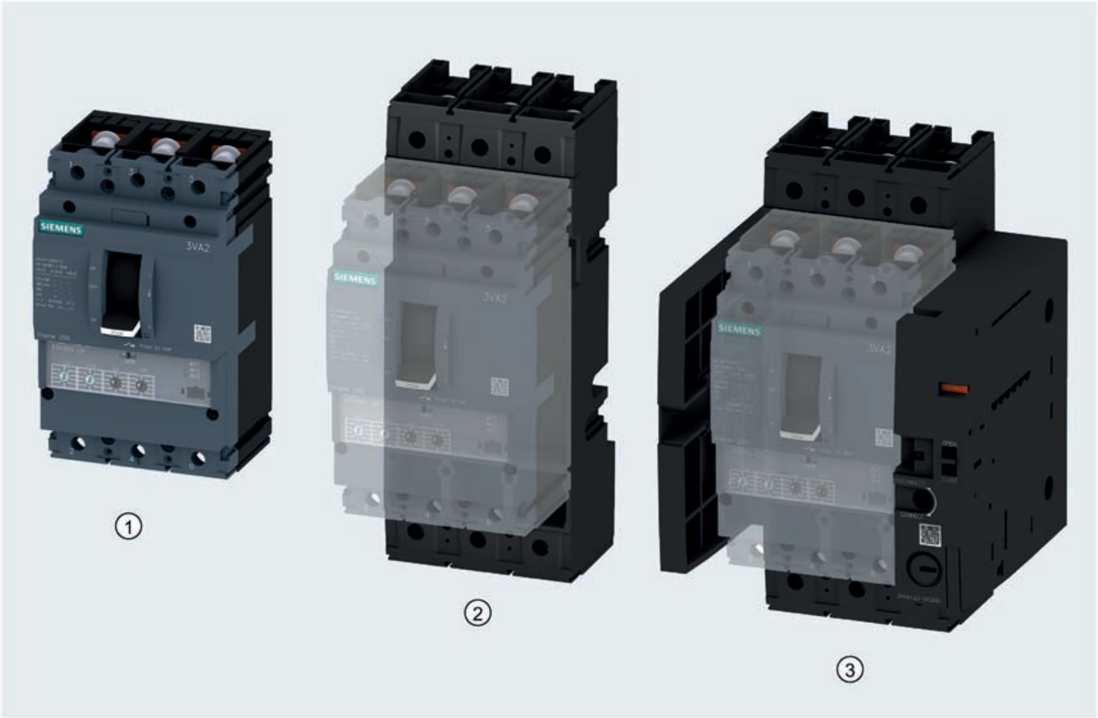

- Fixed mounted ①
- Plug-in technology ②
- Draw-out technology ③

All variants offer the full range of functions, e.g. they can be equipped with every kind of accessory. In addition, the last two variants are designed to allow speedy molded case circuit breaker replacement for maintenance purposes or visual indication of the electrical isolation in the main circuit.

Indication of switching positions in the draw-out unit

The picture below illustrates the colors used to indicate the switching position in the draw-out unit:

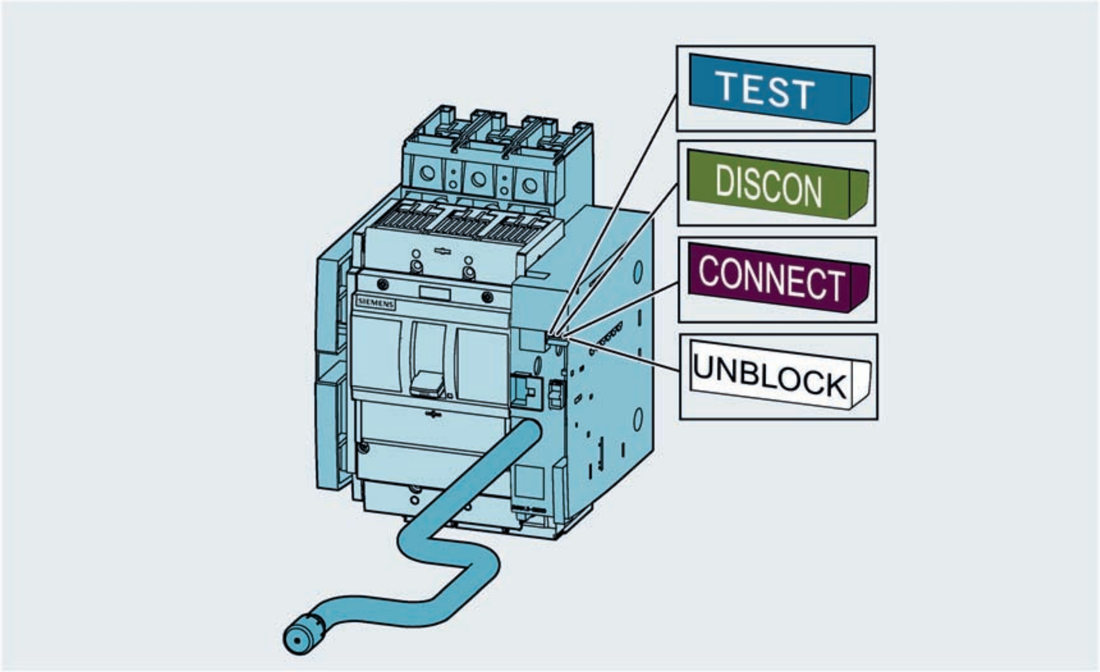

The switching position is indicated in a window of the draw-out unit and is clearly color-coded, enabling immediate identification of the current switching position of the molded case circuit breaker.

The draw-out unit has three switching positions:

- CONNECT:

  The molded case circuit breaker is connected to the main circuit. The auxiliary circuits are also closed.

- TEST:

  In the TEST position, the main contacts of the molded case circuit breaker are not connected to the main circuit, but only to the auxiliary circuit. This allows the functionality of the auxiliary circuit and all of its components (auxiliary switches, auxiliary releases, communication, etc.) to be tested when the main circuit is open.

- DISCONNECT:

  The molded case circuit breaker is not connected to the main circuit nor to the auxiliary circuit.

- UNBLOCK:

  The molded case circuit breaker is not in any of the positions defined above and can be moved by means of the crank handle.

Motor operator for remote control

3VA molded case circuit breakers can also be controlled remotely. Whether the circuit breaker is controlled from "just" the other side of the closed panel door, or the breaker is switched on via a control room or operator panel, for example, is irrelevant.

Motor operators are available as accessories for remote control of the circuit breakers.

2.2.2 Ergonomic design of circuit breakers, handles and control elements

Ergonomic handle

With its wide surface area, the ergonomic handle is designed to assist manual operation of the circuit breaker. The white strip around the edge of the handle makes it easy to identify in conditions of poor visibility. The additional rated operational current information stamped on the white strip also significantly eases identification of the circuit breaker when it is one of many breakers in a large switchboard installation.

Clear status indication

The possible switching positions of manual rotary operators are listed below:

- ON - red marking
- TRIP - yellow marking
- OFF - green marking

The handle clearly engages in one of these positions depending on the status of the molded case circuit breaker. The switching positions are color-coded so that you can identify the status of the circuit breaker at a glance.

Active illumination

You can retrofit an active illumination kit for handling manual rotary operators. The illuminated indicator in the rotary handle signals the relevant switching position in the colors red, yellow and green. This provides clear visualization of the switching position on-site in conditions of poor visibility.

Color-coded control elements

The control elements on the thermal-magnetic and electronic trip units are color-coded.

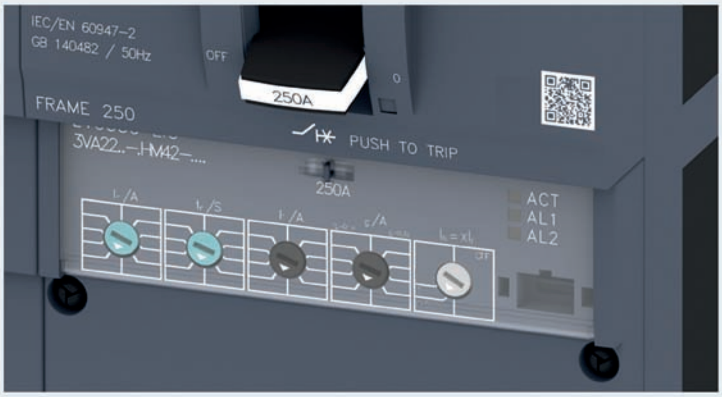

The color of each control element indicates that it performs a specific function, helping you to make the required settings quickly.

Color		Function
	Petrol blue	Overload protection
	Black	Short-circuit protection, ground-fault protection
	Gray	Protection of neutral conductor
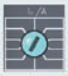
2.2.3 Wide range of accessories

The internal accessories (e.g. alarm and auxiliary switches, auxiliary releases, etc.) all belong to one family and can be installed on any size of circuit breaker up to 1000 A in the 3VA1 and 3VA2 ranges. The accessories are designed for quick and easy installation. The components are coded by color and design to ensure that they are always installed at the correct position in the circuit breaker.

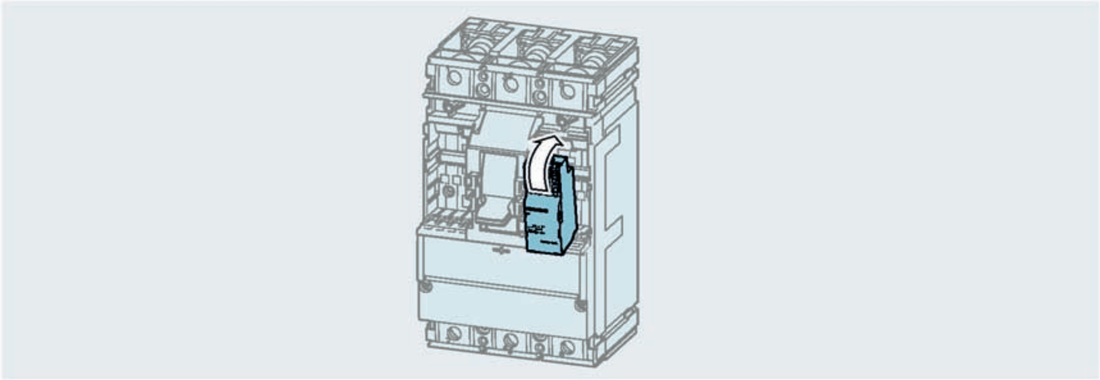

Color coding of accessories

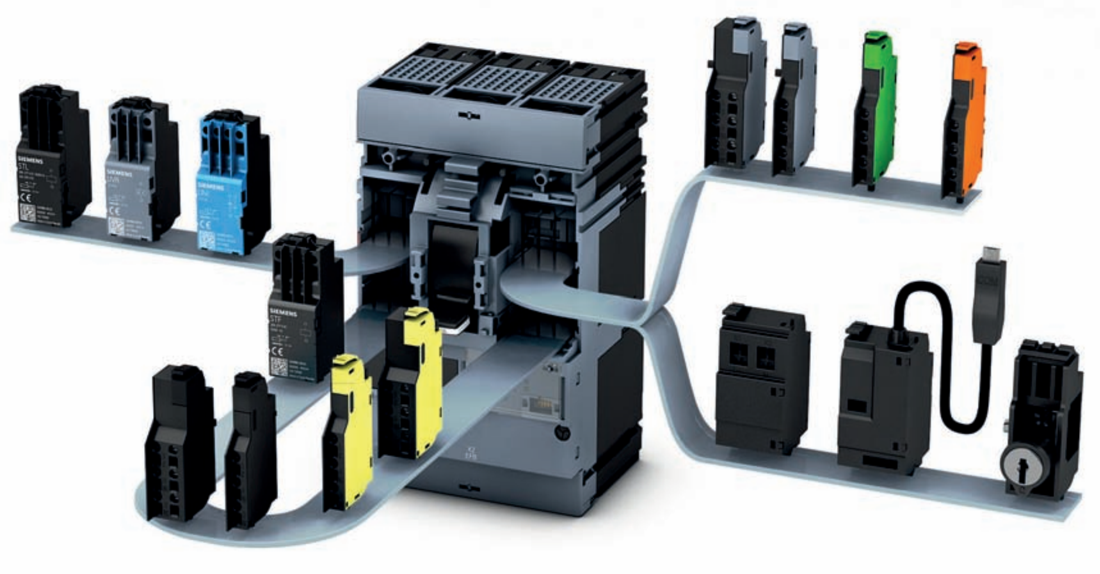

A system of color coding has been used to clearly identify the specific functions of individual accessories:

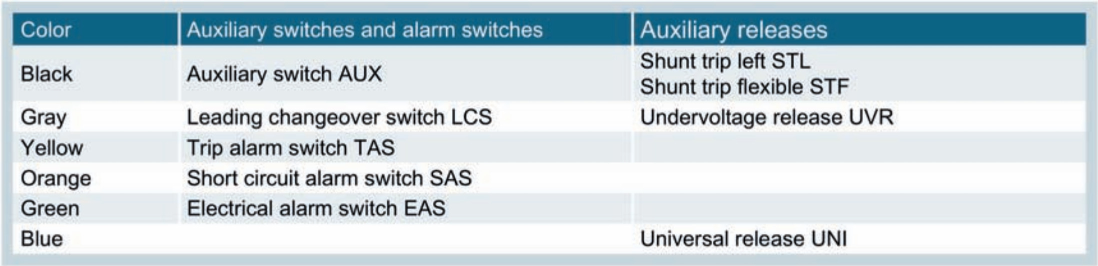

Color	Auxiliary switches and alarm switches	Auxiliary releases
Black	Auxiliary switch AUX	Shunt trip left STL Shunt trip flexible STF
Gray	Leading changeover switch LCS	Undervoltage release UVR
Yellow	Trip alarm switch TAS	
Orange	Short circuit alarm switch SAS	
Green	Electrical alarm switch EAS	
Blue		Universal release UNI

The cylinder lock and communication accessories included with the internal accessories in the picture above are explained in chapters Locking and interlocking (Page 360) and Communication and system integration (Page 484).

Fast assembly of motor operators

The motor operators have been designed for quick and easy assembly and disassembly. The internal accessories are therefore easily accessible.

2.2.4 Connection technology

A large selection of connection technology is available for the 3VA range of molded case circuit breakers.

The supported cable cross-sections are based on the size of the molded case circuit breaker and the cable terminals used. The terminals are fitted either internally or externally to the molded case circuit breaker.

With it you can implement various front and rear main conductor connections for the molded case circuit breakers in all types of installation (fixed-mounted, plug-in and draw-out).

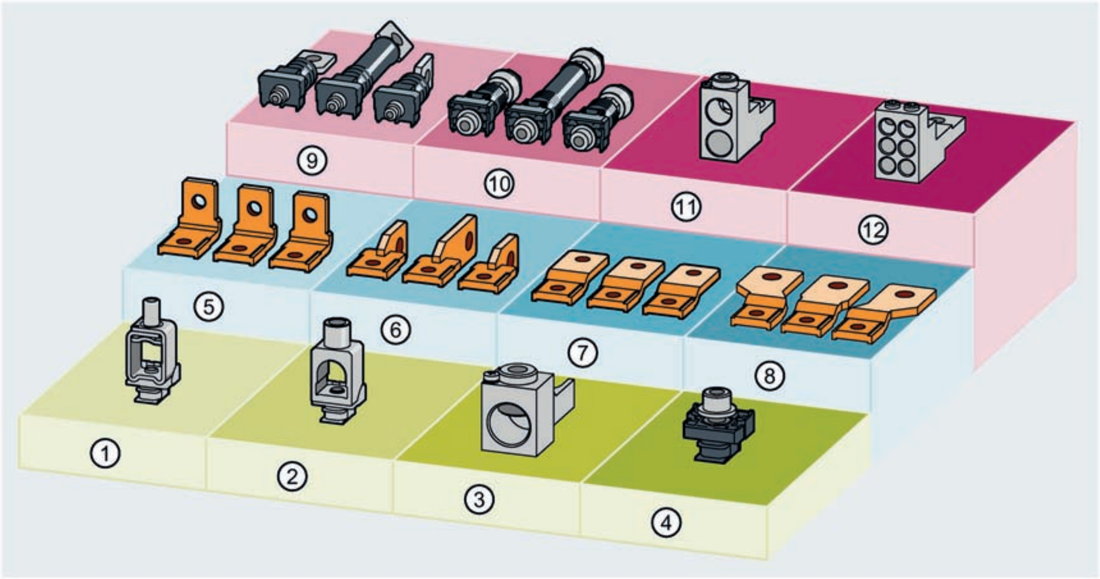

①	Box terminal	⑦	Front bus connectors extended
②	Wire connector	⑧	Front bus connectors offset
③	Wire connector, large	⑨	Rear connection stud flat
④	Nut keeper kit	⑩	Rear connection stud round
⑤	Nut keeper kit, right-angled	⑪	Wire connector for 2 cables
⑥	Bus connectors edgewise	⑫	Distribution wire connector for 6 cables

Cables and busbars

The 3VA molded case circuit breakers are designed for different cables and busbars:

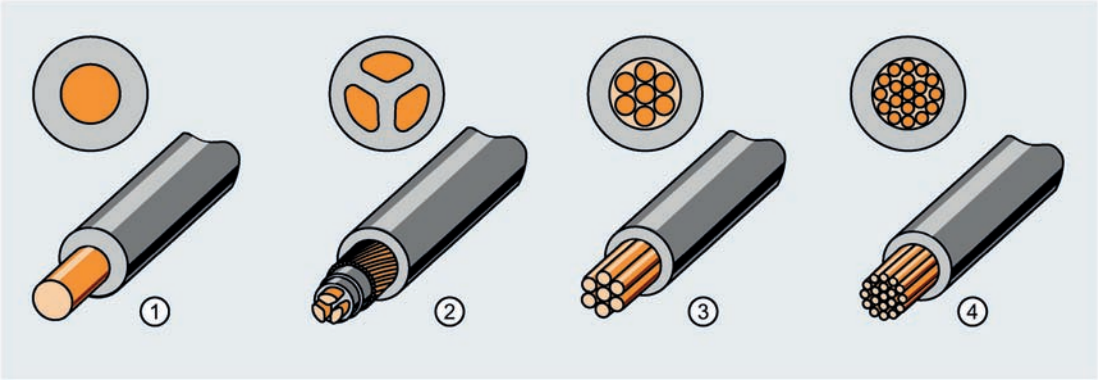

- Different cable types, e.g.
  - ① Circular conductor
  - ② Sector-shaped conductor
  - ③ Stranded
  - ④ Finely stranded

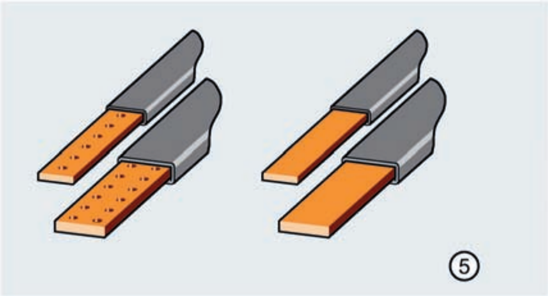

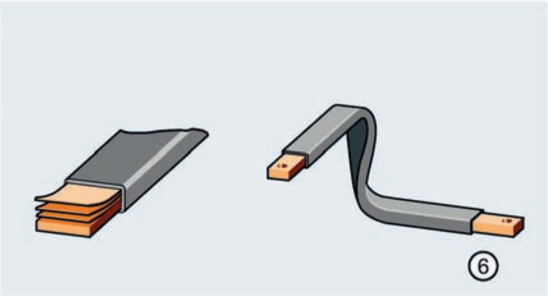

- ⑤ Busbars
  - Rigid
  - Laminated or flexible
- ⑥ Laminated copper bar
- Different materials
  - Copper cables
  - Aluminum cables

2.3 Technical details

A summary of the technical features of 3VA molded case circuit breakers can be found in this chapter.

The topics discussed in this chapter are listed below:

- Circuit breaker identification
- Operation
- Design and components – 3VA1
- Design and components – 3VA2
- Current limitation
- Breaking capacity

2.3.1 Circuit breaker identification

Each 3VA molded case circuit breaker can be clearly identified from various labels and plates attached to the unit.

Circuit breaker labeling

Each 3VA molded case circuit breaker has labels displaying all the important technical information, enabling unique identification:

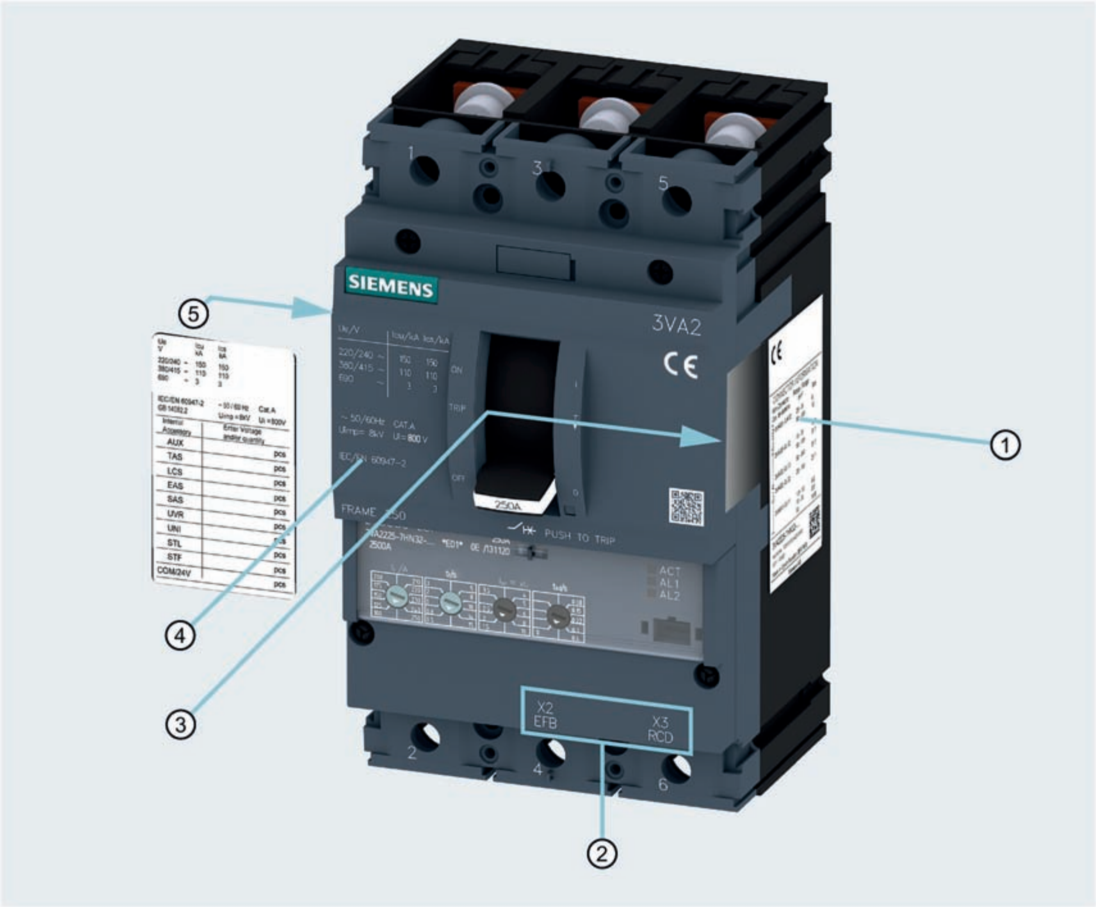

①	Connection information label	④	Key electrical data
②	ETU connection designations	⑤	Internal accessories label
③	Adhesive label insert (in accessory compartment)		

Front panel: Labeling

The following information is displayed on the front panel of the circuit breaker:

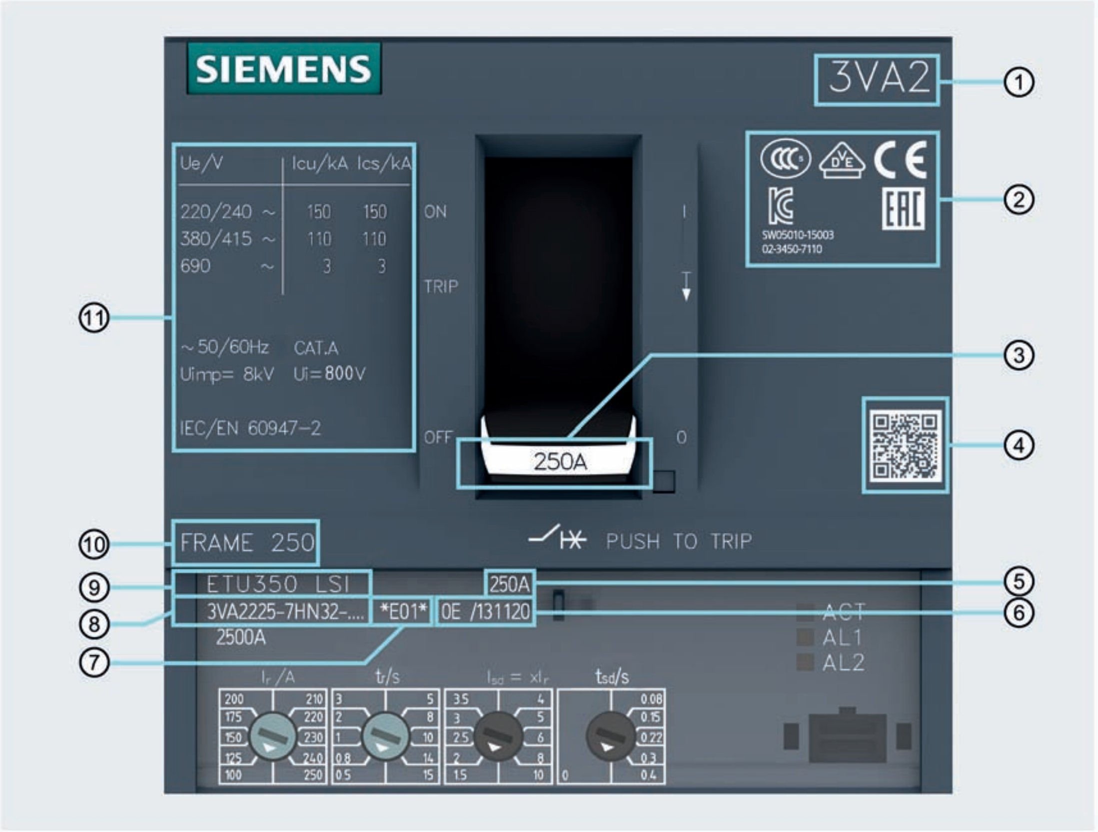

① Circuit breaker designation
② Approvals
③ Rated operational current
④ Knowledge Manager (see below)
⑤ Rated operational current
⑥ Date of manufacture
⑦ Product version
⑧ Article number
⑨ Trip unit type
⑩ Size and breaking capacity class
⑪ Key electrical data

Knowledge Manager

A QR code is attached in a clearly visible location to every 3VA molded case circuit breaker. This code can be scanned with a smartphone or a tablet PC. For the full range of QR code functions, use the "Industry Support" app supplied free of charge by Siemens.

It allows you to directly view or download all relevant product information.

The key electrical data label ⑪ contains the following information:

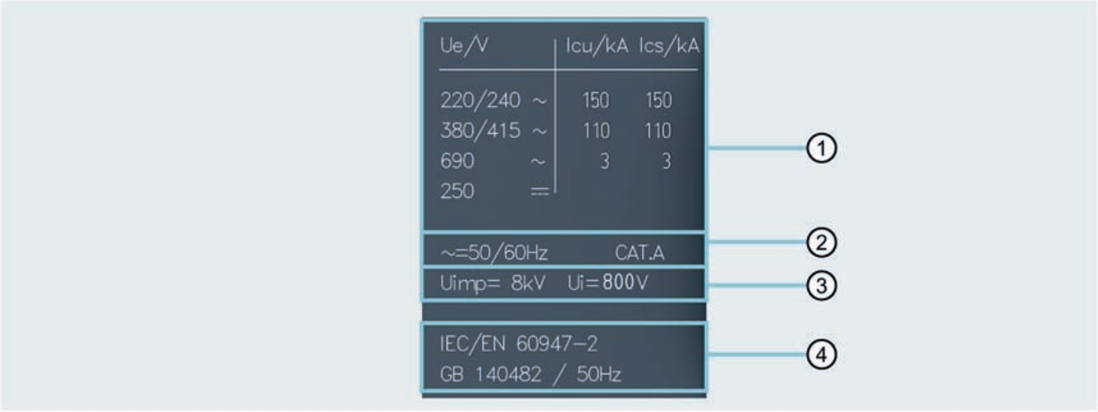

① IEC breaking capacity values at various voltages
② Frequency, utilization category
③ Insulation data
⑤ Supported standards

Connection information label

The connection information label displays the following information:

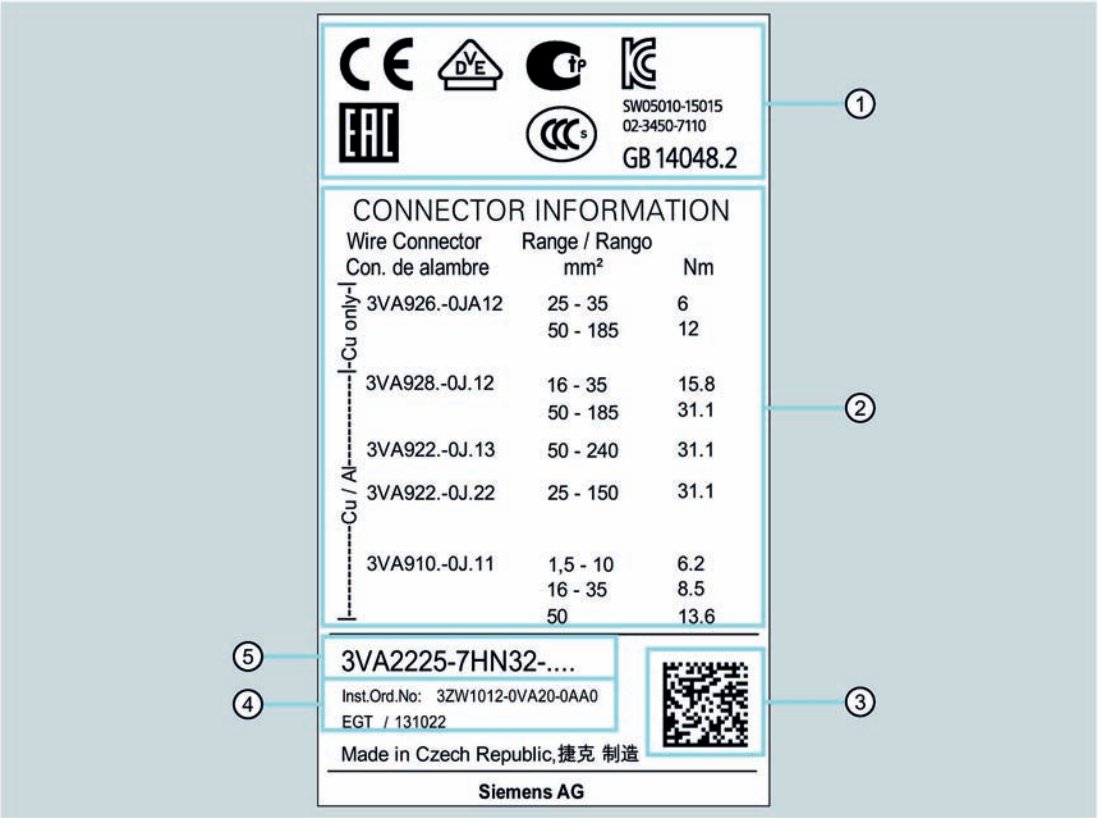

① Approvals
② Information about cable connections
③ Code for production
④ Article number for operating instructions
⑤ Circuit breaker article number

Label insert

The label insert can be found in the right-hand accessory compartment. When an accessory (e.g. motor operator or manual operator) is installed on the circuit breaker, this label can be attached to the accessory.

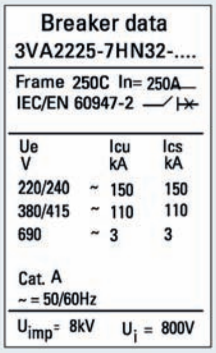

Breaker data

3VA2225-7HN32-....

Frame 250C In= 250A

IEC/EN 60947-2

Ue V		Icu kA	Ics kA
220/240	~	150	150
380/415	~	110	110
690	~	3	3

Cat. A
~ = 50/60Hz

U_{imp}= 8kV U_i = 800V

The label insert displays the following information:

- Information about the molded case circuit breaker
- Article number
- Key electrical data

Internal accessories label

You can make a note of the number of installed accessories on the internal accessories label. This will enable you to ascertain which accessories are installed without removing the accessory cover and to use the information, for example, to reorder components.

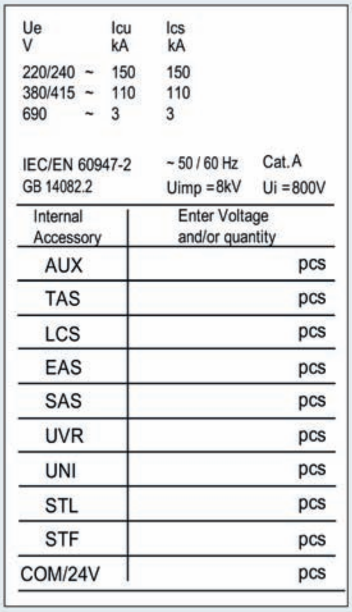

Ue V		Icu kA	Ics kA
220/240	~	150	150
380/415	~	110	110
690	~	3	3

IEC/EN 60947-2 ~ 50 / 60 Hz Cat. A
GB 14082.2 Uimp =8kV Ui =800V

Internal Accessory	Enter Voltage and/or quantity
AUX	pcs
TAS	pcs
LCS	pcs
EAS	pcs
SAS	pcs
UVR	pcs
UNI	pcs
STL	pcs
STF	pcs
COM/24V	pcs

2.3.2 Operation

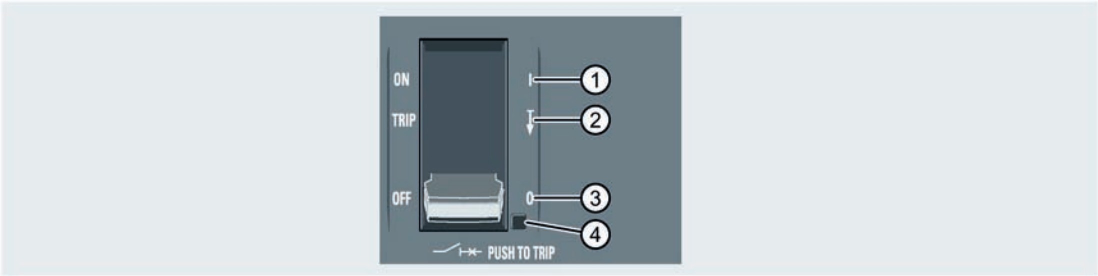

① ON: Main contacts closed
② TRIP: Switching position following a trip
③ OFF: Main contacts open
④ PUSH TO TRIP: Initiates a mechanical trip

The main contacts of the molded case circuit breakers are opened and closed by means of a handle mounted on the front of the unit. All contacts open and close simultaneously on all 3VA molded case circuit breakers in response to the following events:

- The handle is moved from OFF to ON.
- The handle is moved from ON to OFF.
- The tripping mechanism is activated by a trip unit.
- The tripping mechanism is activated by auxiliary releases (e.g. shunt trips, trip units).

Reclosing the circuit breaker contacts from the TRIP position

Follow the steps below to reclose the circuit breaker contacts from the TRIP position:

1. Move the handle to the OFF position.
2. Move the handle to the ON position.
   → The breaker contacts are now closed.

Free tripping

All 3VA molded case circuit breakers have a free tripping capability. This function ensures that the breaker cannot be prevented from tripping even if the operator blocks or is held manually in the ON position or if the breaker is about to close.

Follow the steps below to test the free tripping function in order to verify that the breaker's mechanical release system is working correctly:

1. Move the handle to the ON position.
2. Hold the handle in the ON position and press the button marked <PUSH TO TRIP>.
   → The circuit breaker trips and opens the main contacts.
   → The handle moves quickly into the TRIP position as soon as you release it.

Failure of the molded case circuit breaker to trip indicates that it is defective and must be replaced.

2.3.3 Design and components - 3VA1

The design of the 3VA1 molded case circuit breaker is illustrated in the diagram below:

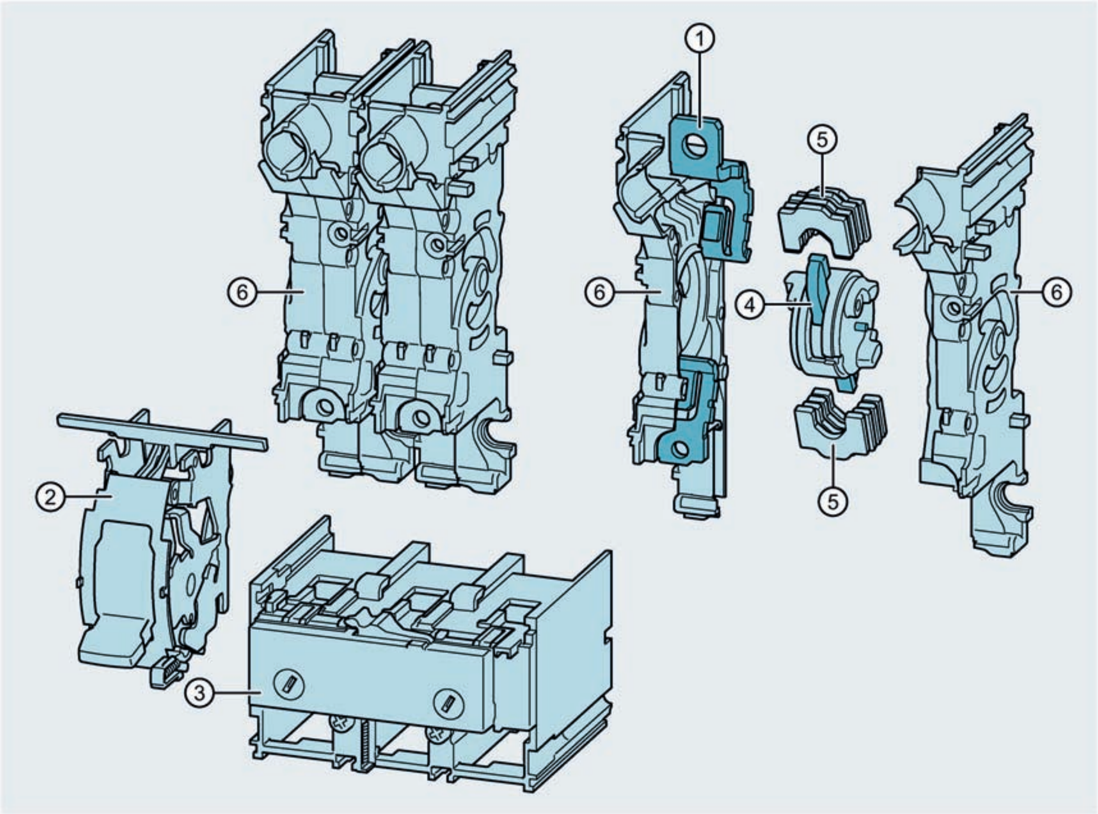

① Main connections	④ Rotary contact system
② Breaker mechanism with handle	⑤ Arc plates
③ Trip unit: TMTU	⑥ Pole cassette enclosure

2.3.4 Design and components - 3VA2

The design of the 3VA2 molded case circuit breaker is illustrated in the diagram below:

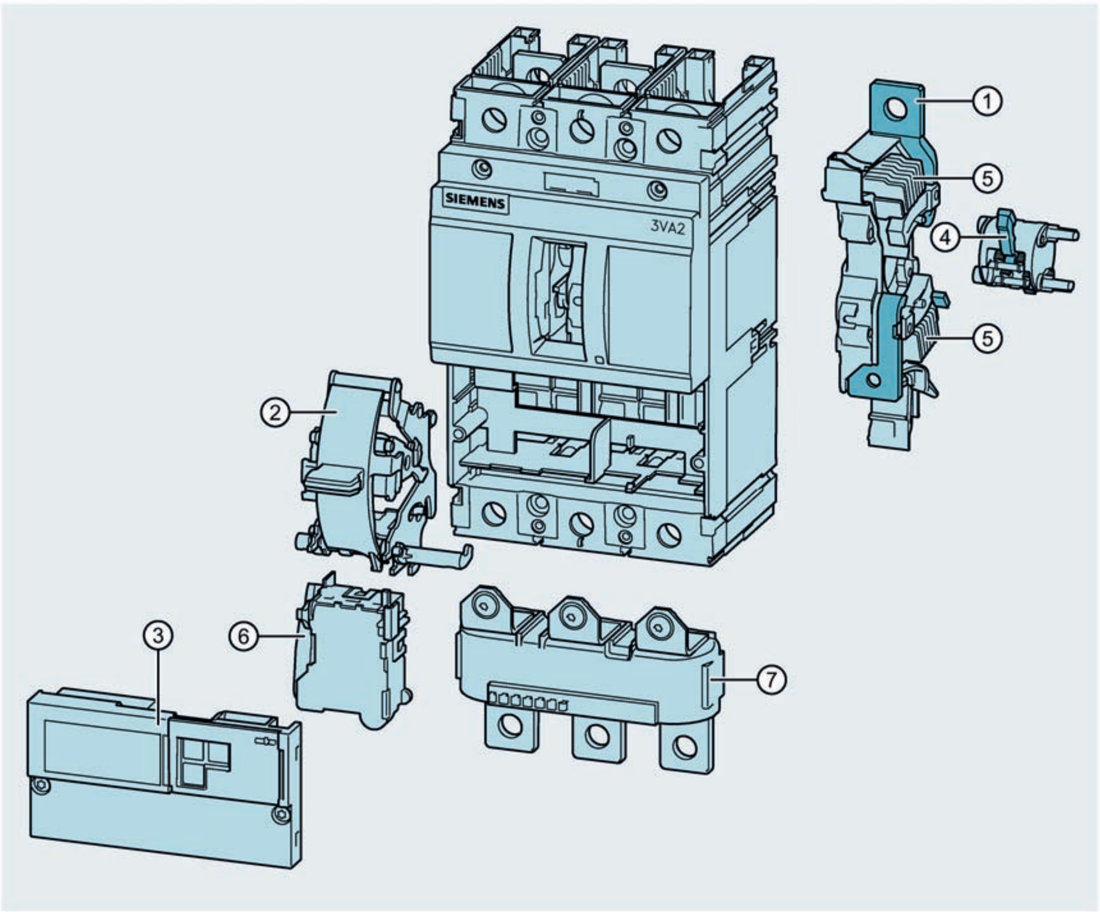

① Main connections
② Breaker mechanism with handle
③ Trip unit: ETU
④ Rotary contact system
⑤ Arc plates
⑥ Maglatch
⑦ Current sensor

2.3.5 Current limitation

"Current limiting" means that the peak value of the prospective impulse short-circuit current i_p is limited to a smaller let-through current i_D.

The compact design of the breakers has been made possible by their excellent current limiting capabilities. In the event of a short-circuit, the molded case circuit breaker substantially reduces the magnitude of the let-through currents, i.e. reduces the load reaching downstream equipment (less thermal load, lower dynamic forces). The level of let-through energy is also reduced to a considerable extent.

3VA molded case circuit breakers are designed with a current-limiting capability.
IEC EN 60947-2 (VDE 0660-101), section 2.3, page 12, defines current-limiting molded case circuit breakers as follows:

"Circuit breaker that, within a specified range of current, prevents the let-through current from reaching the prospective peak value and which limits the let-through energy (I^2t) to a value less than the let-through energy of a half-cycle wave of the symmetrical prospective current."

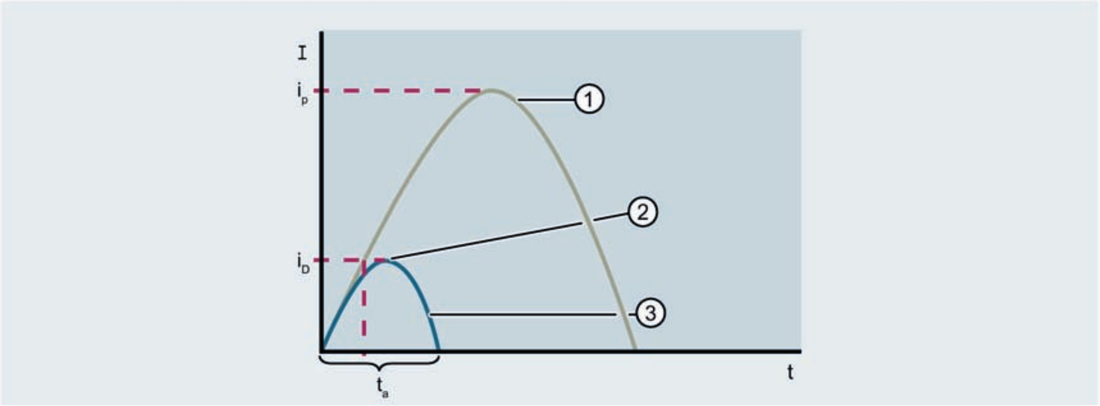

①	Unlimited current
②	Peak value of limited current
③	Limited current
i_D	Let-through current
i_p	Unlimited impulse short-circuit current
t_a	Break time

Double-rotary contact system

To achieve excellent current limiting, the 3VA molded case circuit breakers are equipped with a rotary double-contact system that opens dynamically - on its own - above the specified disengaging currents, on the principle of magnetic repulsion, before the expected peak value of the short-circuit current is reached. These limits have been coordinated and optimized to suit the overall device characteristics. This substantially reduces the thermal and mechanical loading on the molded case circuit breaker and the electrical installation.

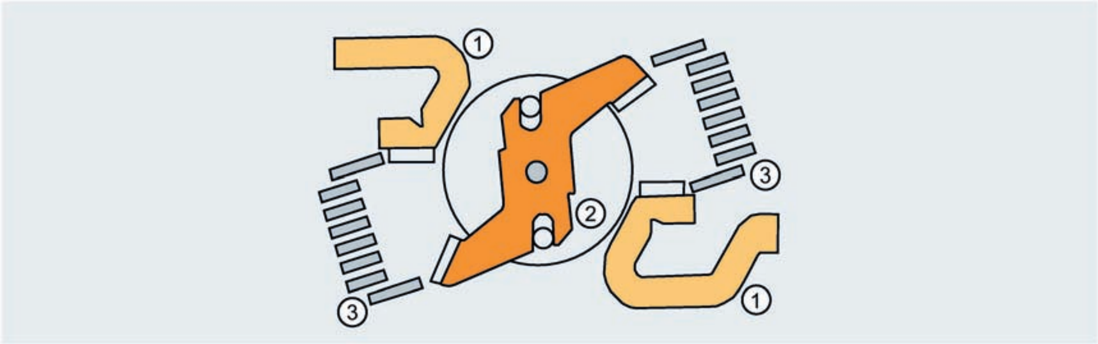

①	Fixed contacts
②	Rotary contact system
③	Arc splitter chute

The switching pole cassettes are optimized for high breaking capacity, and their rotary double-contact system design enables extremely good current limiting thanks to the build-up of peak arc voltage generated at both contacts in the event of a short-circuit. This results in significant limitation of the let-through energy I^2t and the let-through current.

3VA molded case circuit breakers with a rated operational current I_n > 630 A are equipped with a single contact in order to optimize the mounting depth.

2.3.6 Breaking capacity

The rated ultimate short-circuit breaking capacity I_{cu} is the maximum value of the short-circuit current which the protective device is capable of disconnecting in accordance with regulations. Up to this value, the protective device is also allowed to be used in a network.

The 3VA molded case circuit breakers are available with identical external dimensions but various breaking capacity classes according to size and rated operational current range.

The tested tolerance range of the rated operational voltages is ±5%.

Breaking capacity of the 3VA1 range

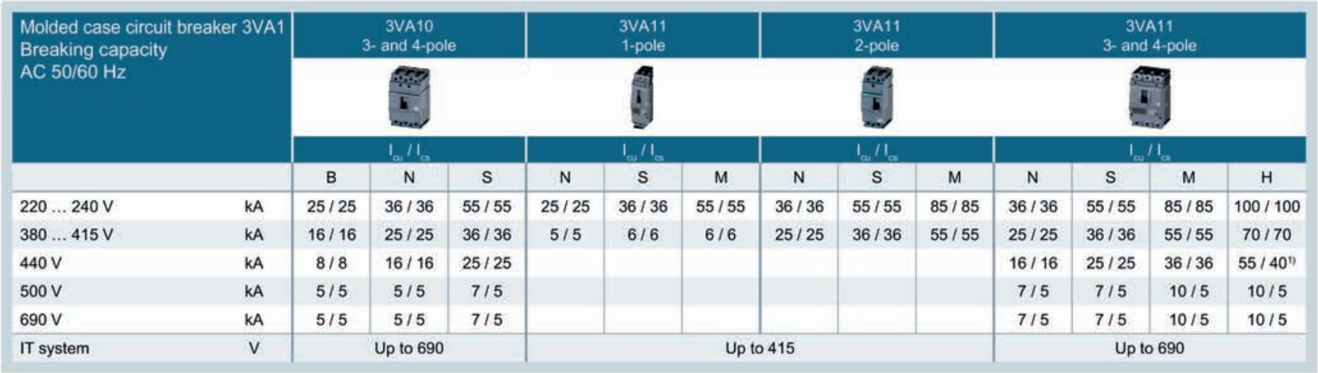

Molded case circuit breaker 3VA1 Breaking capacity AC 50/60 Hz		3VA10 3- and 4-pole			3VA11 1-pole			3VA11 2-pole			3VA11 3- and 4-pole			
		I_{cu} / I_{cs}			I_{cu} / I_{cs}			I_{cu} / I_{cs}			I_{cu} / I_{cs}			
		B	N	S	N	S	M	N	S	M	N	S	M	H
220 ... 240 V	kA	25 / 25	36 / 36	55 / 55	25 / 25	36 / 36	55 / 55	36 / 36	55 / 55	85 / 85	36 / 36	55 / 55	85 / 85	100 / 100
380 ... 415 V	kA	16 / 16	25 / 25	36 / 36	5 / 5	6 / 6	6 / 6	25 / 25	36 / 36	55 / 55	25 / 25	36 / 36	55 / 55	70 / 70
440 V	kA	8 / 8	16 / 16	25 / 25							16 / 16	25 / 25	36 / 36	55 / 40[1]
500 V	kA	5 / 5	5 / 5	7 / 5							7 / 5	7 / 5	10 / 5	10 / 5
690 V	kA	5 / 5	5 / 5	7 / 5							7 / 5	7 / 5	10 / 5	10 / 5
IT system	V	Up to 690			Up to 415						Up to 690			

[1] I_n 125 A, 160 A: I_{cu} / I_{cs} = 36 kA / 36 kA

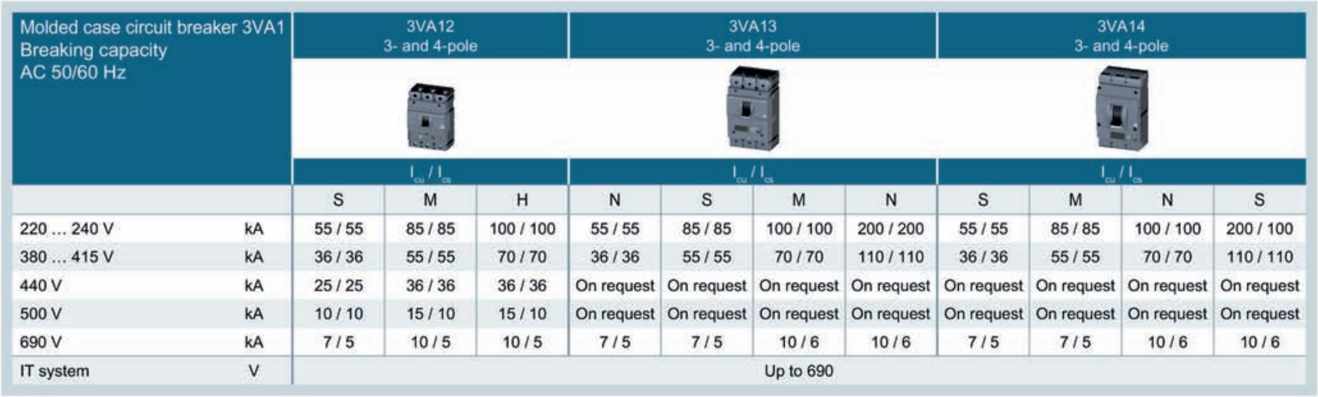

Molded case circuit breaker 3VA1 Breaking capacity AC 50/60 Hz		3VA12 3- and 4-pole			3VA13 3- and 4-pole				3VA14 3- and 4-pole			
		I_{cu} / I_{cs}			I_{cu} / I_{cs}				I_{cu} / I_{cs}			
		S	M	H	N	S	M	N	S	M	N	S
220 ... 240 V	kA	55 / 55	85 / 85	100 / 100	55 / 55	85 / 85	100 / 100	200 / 200	55 / 55	85 / 85	100 / 100	200 / 100
380 ... 415 V	kA	36 / 36	55 / 55	70 / 70	36 / 36	55 / 55	70 / 70	110 / 110	36 / 36	55 / 55	70 / 70	110 / 110
440 V	kA	25 / 25	36 / 36	36 / 36	On request	On request	On request	On request	On request	On request	On request	On request
500 V	kA	10 / 10	15 / 10	15 / 10	On request	On request	On request	On request	On request	On request	On request	On request
690 V	kA	7 / 5	10 / 5	10 / 5	7 / 5	7 / 5	10 / 6	10 / 6	7 / 5	7 / 5	10 / 6	10 / 6
IT system	V	Up to 690										

Breaking capacity of the 3VA2 range

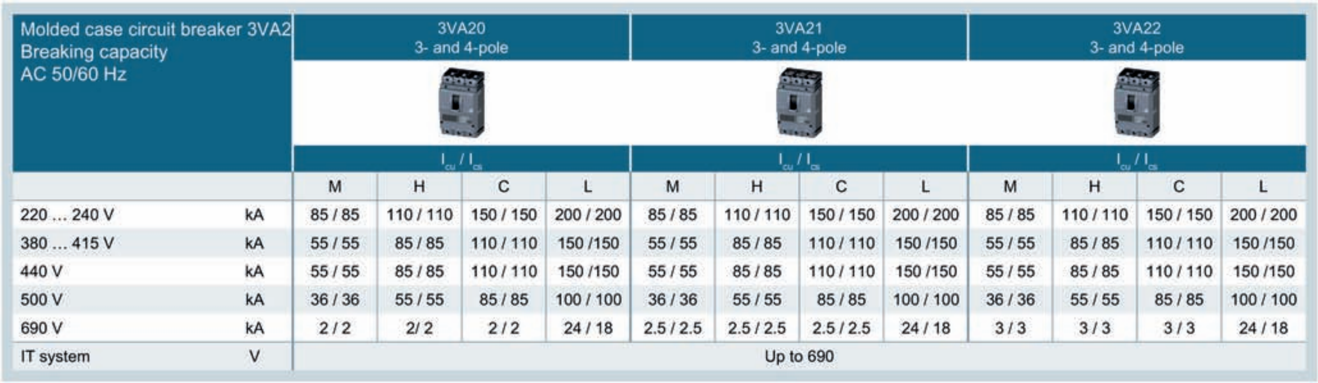

Molded case circuit breaker 3VA2 Breaking capacity AC 50/60 Hz		3VA20 3- and 4-pole				3VA21 3- and 4-pole				3VA22 3- and 4-pole			
		I_{cu} / I_{cs}				I_{cu} / I_{cs}				I_{cu} / I_{cs}			
		M	H	C	L	M	H	C	L	M	H	C	L
220 … 240 V	kA	85 / 85	110 / 110	150 / 150	200 / 200	85 / 85	110 / 110	150 / 150	200 / 200	85 / 85	110 / 110	150 / 150	200 / 200
380 … 415 V	kA	55 / 55	85 / 85	110 / 110	150 /150	55 / 55	85 / 85	110 / 110	150 /150	55 / 55	85 / 85	110 / 110	150 /150
440 V	kA	55 / 55	85 / 85	110 / 110	150 /150	55 / 55	85 / 85	110 / 110	150 /150	55 / 55	85 / 85	110 / 110	150 /150
500 V	kA	36 / 36	55 / 55	85 / 85	100 / 100	36 / 36	55 / 55	85 / 85	100 / 100	36 / 36	55 / 55	85 / 85	100 / 100
690 V	kA	2 / 2	2/ 2	2 / 2	24 / 18	2.5 / 2.5	2.5 / 2.5	2.5 / 2.5	24 / 18	3 / 3	3 / 3	3 / 3	24 / 18
IT system	V	Up to 690											

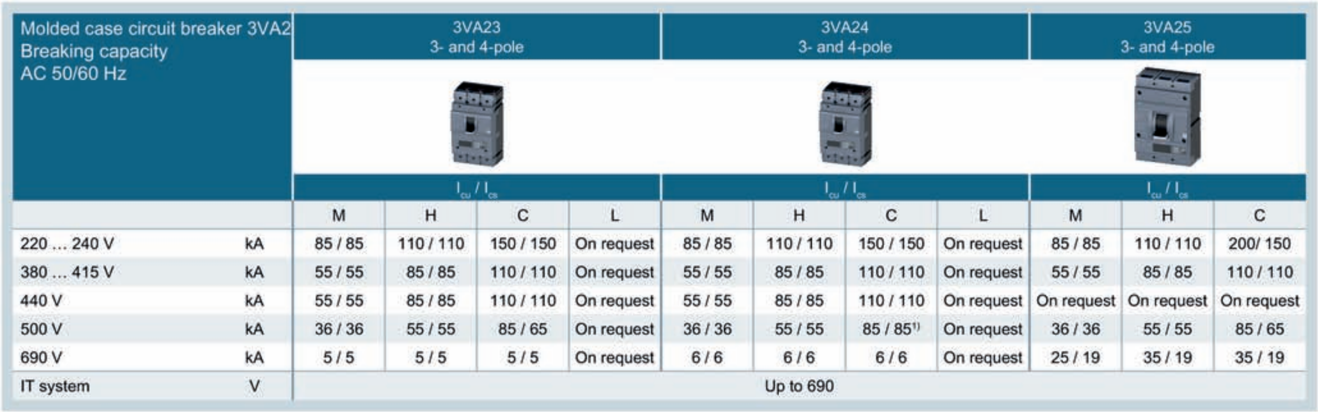

Molded case circuit breaker 3VA2 Breaking capacity AC 50/60 Hz		3VA23 3- and 4-pole				3VA24 3- and 4-pole				3VA25 3- and 4-pole		
		I_{cu} / I_{cs}				I_{cu} / I_{cs}				I_{cu} / I_{cs}		
		M	H	C	L	M	H	C	L	M	H	C
220 … 240 V	kA	85 / 85	110 / 110	150 / 150	On request	85 / 85	110 / 110	150 / 150	On request	85 / 85	110 / 110	200/ 150
380 … 415 V	kA	55 / 55	85 / 85	110 / 110	On request	55 / 55	85 / 85	110 / 110	On request	55 / 55	85 / 85	110 / 110
440 V	kA	55 / 55	85 / 85	110 / 110	On request	55 / 55	85 / 85	110 / 110	On request	On request	On request	On request
500 V	kA	36 / 36	55 / 55	85 / 65	On request	36 / 36	55 / 55	85 / 85 1)	On request	36 / 36	55 / 55	85 / 65
690 V	kA	5 / 5	5 / 5	5 / 5	On request	6 / 6	6 / 6	6 / 6	On request	25 / 19	35 / 19	35 / 19
IT system	V	Up to 690										

1) I_n 400/500 A and I_n 630 A: I_{cs} = 65 kA

2.3.7 Infeed

The 3VA molded case circuit breakers can be supplied with power from above and below.

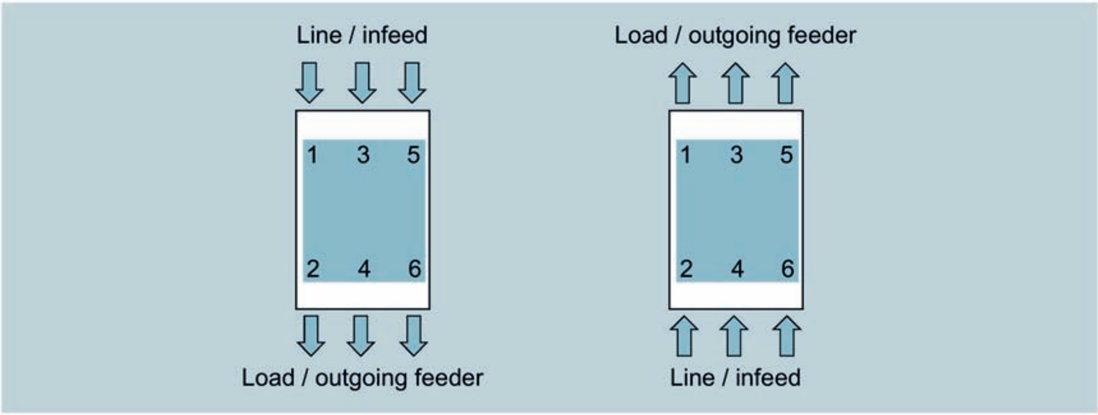

2.4 Selectivity

Switching devices connected in series, e.g. molded case circuit breakers and fuses, work together to ensure graded tripping of these switching devices. The closest, upstream switching device before the location of the short-circuit must trip. The other switching devices on the same current run do not trip. The purpose of selectivity is to minimize the effects of a fault in terms of its duration and the area affected by the fault.

Selectivity is achieved when the circuit breakers are matched to each other by means of selection, configuring and trip settings in such a way that, in the event of a fault, only the breaker closest to the location of the fault trips.

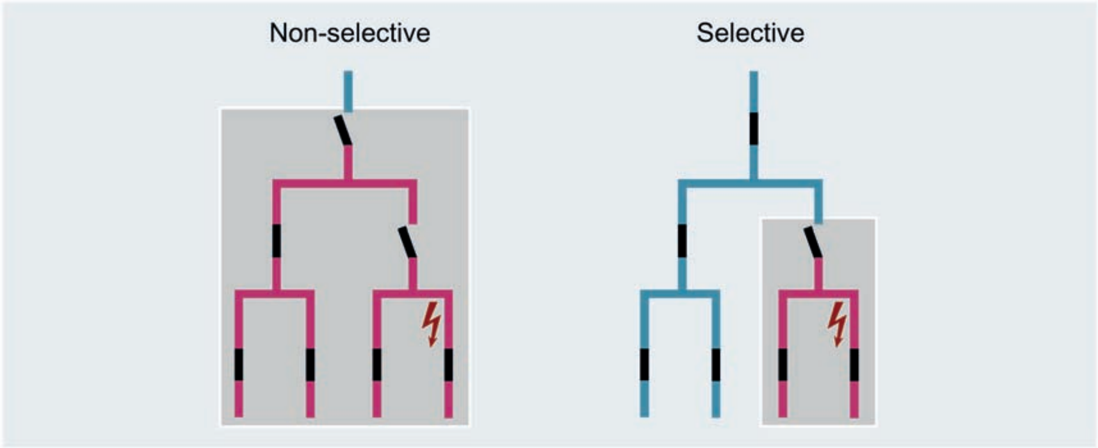

⚡ Short-circuit location

Selective behavior

The selective behavior of molded case circuit breakers is mainly influenced by the following factors:

- Tripping value settings of the trip unit
- Tripping and break times
- Let-through current values
- Modes of switching of the relevant circuit breakers
  - Zero-current interrupter
  - Current limiter

The selective behavior of circuit breakers can be implemented technically by a variety of selectivity concepts:

- Current selectivity

  The selectivity can be calculated in the overload range by comparing the time/current characteristics. In the short-circuit range, this comparison leads to values that are too low. The reason for this is that the trip unit behaves differently in the case of short-circuit currents compared with its long-term behavior, e.g. in the case of overload.

  If the short-circuit currents differ sufficiently at the installation points of two molded case circuit breakers, the instantaneous short-circuit releases can normally be set such that if a short-circuit occurs behind the downstream circuit breaker, only this downstream breaker trips.

  If the short-circuit currents are approximately the same at the installation points of the molded case circuit breakers, the grading of the tripping currents of the short-circuit releases only enables selectivity up to a specific short-circuit current .

  This current is referred to as the ultimate selectivity value I_s.

- Time selectivity

  Selectivity can be achieved by time selectivity up to the threshold values of the instantaneous short-circuit releases. To achieve this, the upstream circuit breaker requires delayed short-circuit releases, so that in the event of a fault, only the downstream circuit breaker will disconnect the part of the electrical installation affected by the fault from the supply.

  Both the tripping delays and the tripping currents of the short-circuit releases are graded.

- Zone selective interlocking - ZSI

  Selective behavior is achieved by installing parallel control cables between the molded case circuit breakers. The electronic trip units then use a fast signal link to determine priorities in the tripping sequence.

  Zone selective interlocking (ZSI) was developed by SIEMENS to prevent undesirably long tripping times when several molded case circuit breakers are connected in series.

  ZSI enables the tripping delay to be reduced to 50 ms for the circuit breaker upstream from the location of the short circuit.

- Dynamic selectivity

  This method is based on evaluation of the arc power which is generated in the arc chute when the contacts open dynamically in response to a short circuit. During this process, a smaller sized downstream molded case circuit breaker converts more energy in the arc chute than the larger, upstream molded case circuit breaker. A selective trip unit evaluates the energy conversion in both molded case circuit breakers. The downstream molded case circuit breaker trips, while the contacts of the upstream circuit breaker close again. Since both molded case circuit breakers perform a current limiting function, the residual current limit imposed in practice is higher than the limiting action specified for the individual molded case circuit breakers.

Full selectivity

There is an increasing demand for full selectivity in order to safeguard continuity of service by power distribution systems. A power system is said to be fully selective if only the protective device located upstream of the fault location when viewed in the direction of energy flow, i.e. from the infeed to the load, trips in the event of a fault.

Full selectivity always refers to the short-circuit current occurring at the installation point.

Partial selectivity

A system is said to be partially selective when selective tripping in response to a system fault is not ensured up to the maximum ultimate short-circuit breaking capacity I_{cu} of the switching devices. Selectivity is then ensured only up to a certain I_s current value (ultimate selectivity value). If the calculated prospective short-circuit current at the installation point of the downstream protective device is lower than the ultimate selectivity value specified for the switchgear assembly, then it is still possible to describe the system as fully selective.

If the value determined by the short-circuit current calculation (e.g. according to IEC / EN 60909, DIN VDE 0102) at the installation point of the downstream circuit breaker is below the selectivity limit current listed in the respective table for the selected combination, selectivity is guaranteed for all possible short circuits at the installation point.

If the calculated short-circuit current at the installation point is higher than the ultimate selectivity value, selective tripping by the downstream circuit breaker is only assured up to the value listed in the table. A judgment must be made as to whether the value can be considered to be sufficient because the probability that the maximum short-circuit current will occur is low, for example. Otherwise, a circuit breaker combination should be chosen whose selectivity limit lies above the maximum short-circuit current.

Selectivity with 3VA2 molded case circuit breakers

The 3VA2 range is designed to deliver excellent selective tripping combined with optimum current limiting and outstanding breaking capacity.

3VA2 molded case circuit breakers have been specifically designed to meet the following requirements:

- System-wide, high selectivity with a rated operational current interval of 1 : 2.5 up to the miniature circuit breaker (for molded case circuit breakers with ELISA trip units, even 1 : 1.6 to each other or to LV HRC fuses)
- Selectivity in combination with high current limiting and high breaking capacity
- Cost-effective design / configuring of selective power distribution systems

These molded case circuit breaker requirements are achieved in engineering terms as follows:

- Rotary double-contact system for highly dynamic opening response
- Coordinated electronic trip units
- Dynamic selectivity

Depending on the molded case circuit breakers used, with a size/rated operational current differential in a ratio of at least 1 : 2.5 and selection of suitable breaking capacity classes, you can achieve selective tripping of the area of the installation directly affected by the fault up to the maximum ultimate short-circuit breaking capacity.

You can find information on selectivity values for 3VA2 molded case circuit breakers on the Internet under the link for 3VA documentation (http:/www.siemens.com/3VA-Documentation).

Electronic trip units and fast trip units

As a protective device, the molded case circuit breaker is required to clear electrical faults in the system. For this purpose, 3VA2 circuit breakers are equipped with intelligent electronic trip units which can be combined with metering functions.

The tripping characteristic of the electronic trip units can be finely and flexibly adjusted. In the event of short circuits, a fast trip unit also responds according to the arc power from the arc chute. This selective trip unit ensures that major short circuits are cleared more quickly, while at the same time ensuring that medium short circuits are interrupted selectively.

2.5 Standards and guidelines

All the standards and guidelines with which 3VA molded case circuit breakers comply are summarized in this chapter.

The topics discussed in this chapter are listed below:

- Compliance with standards
- Electromagnetic compatibility
- Ambient conditions
- Degrees of protection

2.5.1 Compliance with standards

The standards fulfilled by the 3VA molded case circuit breakers include:

- IEC / EN 60947-1
- IEC / EN 60947-2
- IEC / EN 60947-2, Annexes B, H and M
- IEC / EN 60947-3
- IEC / EN 60947-6-1

2.5.2 Electromagnetic compatibility

The 3VA molded case circuit breakers meet the requirements of the following standards:

- CISPR11, Class A and Class B
- IEC / EN 60947-1, Annex S
- IEC / EN 60947-2, Annexes B, F, J and N

The 3VA molded case circuit breakers are adequately resistant to the following factors:

- Electrostatic charge
- Electrostatic discharge
- Electromagnetic waves, e.g. from transmission systems, mobile phones, radio telephone sets and radar systems
- Overvoltage, e.g. caused by lightning
- Voltage surges

2.5.3 Certificates

You can find information on the available certification (CE, UL, CSA, FM, marine approvals) on the Internet (http://support.automation.siemens.com/WW/view/en/54137334/134200).

In the Entry List you can use the certificate type (e.g. general product approval, explosion protection, test certificates, shipbuilding) as a filter criterion.

2.5.4 Ambient conditions

Pollution degree

Operation of the 3VA1 and 3VA2 molded case circuit breakers is approved in accordance with IEC / EN 60947-1 and IEC / EN 60664-1 for pollution degree 3.

Ambient temperature

3VA molded case circuit breakers are used at ambient temperatures from -25 °C to +70 °C. Derating (reduction in rated operational current) is required at temperatures above +50 °C. You will find more information on the applicable derating factors in chapter Derating and temperature compensation (Page 628).

The permissible storage temperature in original Siemens packaging is between -40 °C and +80 °C.

Special climatic requirements

3VA molded case circuit breakers can also be used under harsh conditions.

Harsh conditions of storage, transportation and stationary use

The molded case circuit breakers have been tested according to the relevant special test procedures defined in IEC / EN 60947-1, Annex Q for **Class E** applications.

This class covers the areas MC3 + CC2 + SC1:

- Ambient temperature
- Humidity
- Vibration environment
- Shock environment

These ambient conditions can be referred to as "Open deck, damp and cold atmosphere without salt spray" or "Difficult, non-marine conditions".

The following standards-related criteria are complied with:

- IEC / EN 60068-2-2 "Bd" and IEC / EN 60068-2-1 "Ab":

  Temperature range: -25 °C … +70 °C
- IEC / EN 60068-2-30 "Db"

  Humid heat up to +55 °C and air humidity up to 95 %
- IEC / EN 60068-2-6 "Fc"

  Vibration test
- IEC / EN 60068-2-27 "Ea"

  Shock resistance test

Between the tests of compliance with the standards and at the end of the tests, the usability of the devices is assured with the "Verification of operation characteristics".

Vibration resistance and shock resistance

3VA molded case circuit breakers are insensitive to vibrations and meet the requirements relating to mechanical and electromechanical vibration strength according to IEC / EN 60068 and the specifications of the shipbuilding societies.

The circuit breakers resist impacts of up to 10 g and are tested to withstand without damage their operating conditions with shock impact according to IEC / EN 60068-2 27 "Ea" with 150 m/s² / 11 ms.

Installation altitudes

When 3VA1 and 3VA2 molded case circuit breakers are used at up to 2000 m above sea level, the rated data will not change.

An installation altitude above 2000 m can lead to higher temperatures at the switching devices. The lower density of air can significantly reduce heat dissipation,

making it necessary to decrease rated operational voltage, the rated uninterrupted current and the short-circuit values.

Refer to the table below for the calculation factor for determining the key values:

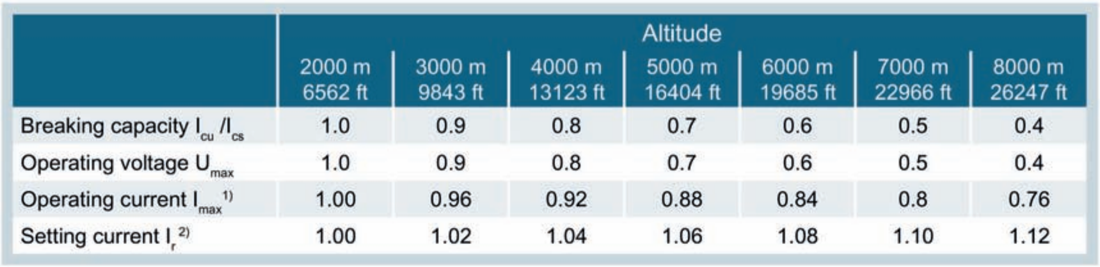

	Altitude						
	2000 m 6562 ft	3000 m 9843 ft	4000 m 13123 ft	5000 m 16404 ft	6000 m 19685 ft	7000 m 22966 ft	8000 m 26247 ft
Breaking capacity I_{cu} /I_{cs}	1.0	0.9	0.8	0.7	0.6	0.5	0.4
Operating voltage U_{max}	1.0	0.9	0.8	0.7	0.6	0.5	0.4
Operating current I_{max} 1)	1.00	0.96	0.92	0.88	0.84	0.8	0.76
Setting current I_r 2)	1.00	1.02	1.04	1.06	1.08	1.10	1.12

1) At maximum ambient temperature +50 °C

2) Thermal-magnetic trip units only

2.5.5 Permissible mounting positions and mounting positions with accessories

The following table shows the possible variations on the mounting positions, as well as mounting positions with accessories:

	Wall mounting				Ceiling mounting	Floor mounting
	vertical upright	horizontal right	horizontal left	vertical rotated	suspended	recumbent
	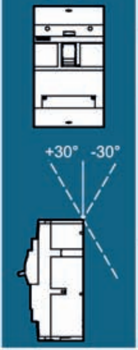	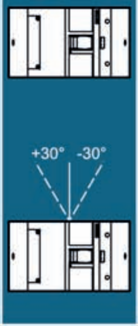	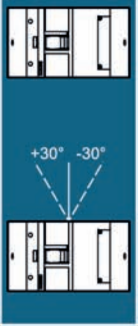			
3VA1 molded case circuit breakers						
Basic circuit breaker (with internal accessories)	■	■	■	■	■	■
On DIN rail (with internal accessories)	■	■	■	■	-	■
3VA2 molded case circuit breakers						
Basic circuit breaker (with internal accessories)	■	■	■	■	■	■
3VA1 molded case circuit breaker (3 and 4-pole) and 3VA2 with accessories						
Connecting and interlocking	■	■	■	■	■	■
Plug-in and draw-out technology	■	■	■	-	-	■
Motor operator without/with plug-in/draw-out technology	■/■	■/■	■/■	-/-	■/-	■/■
Front mounted rotary operator without/with plug-in/draw-out technology	■/■	■/■	■/■	■/-	■/-	■/■
Door mounted rotary operator without/with plug-in/draw-out technology	■/■	■/■	■/■	■/-	■/-	■/■
Side wall mounted rotary operator	■	■	■	■	■	■
Side mounted RCD basic type A (RCD310, RCD510)	■	■	■	■	■	■
Loadside mounted RCD basic type A (RCD320, RCD520)	■	■	■	■	■	■
Loadside mounted RCD advanced type A (RCD820)	■	■	■	■	■	■
Modular RCD type A and B (MRCD)	■	■	■	■	■	■
3-pole on 60 mm busbar system (with internal accessories)	■	-	-	-	-	-

2.5.6 Safety clearances

During a short-circuit interruption, high temperatures, ionized gases and high pressures occur in and above the arcing chambers of the molded case circuit breaker. For this reason, defined minimum clearances must be adhered to during installation between the molded case circuit breakers and the mounting plates, conductor bars and other protection systems placed in the immediate vicinity. This safety area was successfully confirmed with the help of tests on test setups according to IEC 60947-2 (perforated grid cage).

Safety clearances are required to:

- allow pressure distribution
- prevent fire or damage caused by any diffused ionized gases
- prevent a flashover to grounded parts
- prevent arcing or short-circuit currents to live sections.

The following safety clearances apply to 3VA molded case circuit breakers with accessories (e.g. phase barrier, long terminal cover, etc.):

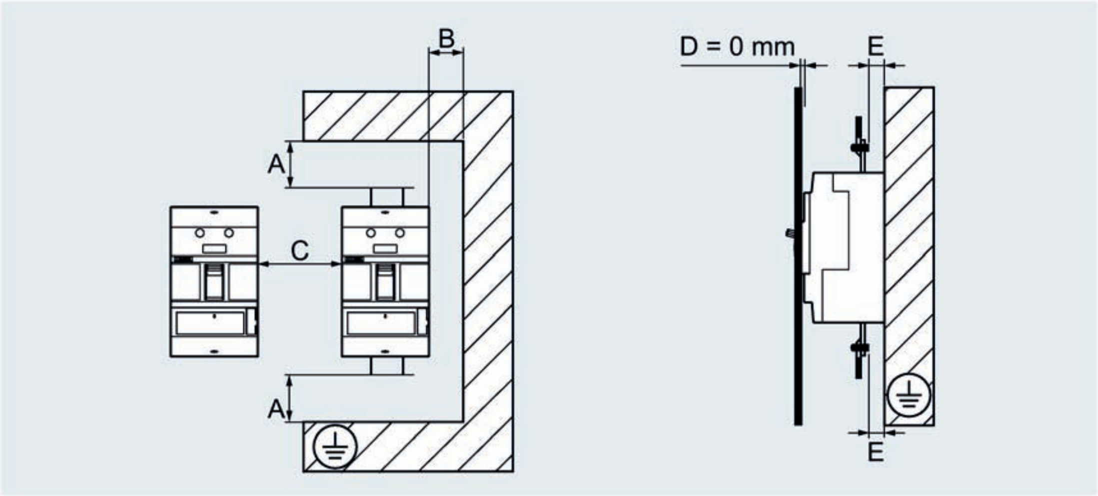

A	Minimum clearance between molded case circuit breaker and current paths (uninsulated and grounded metal), see tables below
B	Minimum clearance between molded case circuit breaker and side walls left / right (uninsulated and grounded metal), see tables below
C	Minimum clearance between two horizontally installed molded case circuit breakers, see tables below; applicable to fixed-mounted and plug-in versions (see chapter Plug-in and draw-out technology (Page 272))
D	Minimum clearance between molded case circuit breaker and panel door
E	Minimum clearance between live parts of connection technology and grounded mounting plate: - 3VA10 and 3VA11: 11 mm - 3VA12, 3VA13 and 3VA14: 8 mm

Minimum clearance for 3VA1 molded case circuit breakers:

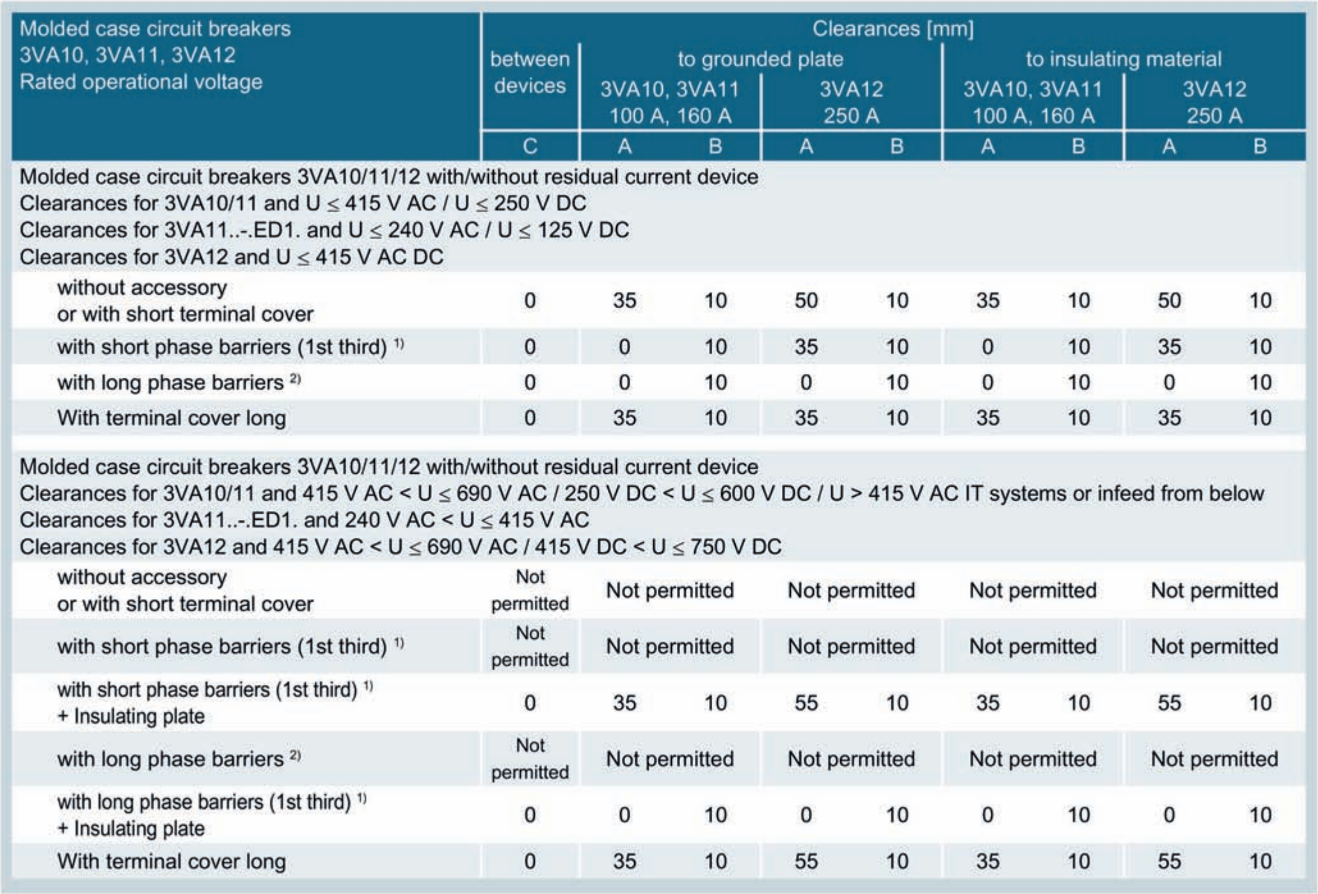

Molded case circuit breakers 3VA10, 3VA11, 3VA12 Rated operational voltage	Clearances [mm]								
	between devices	to grounded plate				to insulating material			
		3VA10, 3VA11 100 A, 160 A		3VA12 250 A		3VA10, 3VA11 100 A, 160 A		3VA12 250 A	
	C	A	B	A	B	A	B	A	B
Molded case circuit breakers 3VA10/11/12 with/without residual current device Clearances for 3VA10/11 and U ≤ 415 V AC / U ≤ 250 V DC Clearances for 3VA11..-.ED1. and U ≤ 240 V AC / U ≤ 125 V DC Clearances for 3VA12 and U ≤ 415 V AC DC									
without accessory or with short terminal cover	0	35	10	50	10	35	10	50	10
with short phase barriers (1st third) 1)	0	0	10	35	10	0	10	35	10
with long phase barriers 2)	0	0	10	0	10	0	10	0	10
With terminal cover long	0	35	10	35	10	35	10	35	10
Molded case circuit breakers 3VA10/11/12 with/without residual current device Clearances for 3VA10/11 and 415 V AC < U ≤ 690 V AC / 250 V DC < U ≤ 600 V DC / U > 415 V AC IT systems or infeed from below Clearances for 3VA11..-.ED1. and 240 V AC < U ≤ 415 V AC Clearances for 3VA12 and 415 V AC < U ≤ 690 V AC / 415 V DC < U ≤ 750 V DC									
without accessory or with short terminal cover	Not permitted	Not permitted		Not permitted		Not permitted		Not permitted	
with short phase barriers (1st third) 1)	Not permitted	Not permitted		Not permitted		Not permitted		Not permitted	
with short phase barriers (1st third) 1) + Insulating plate	0	35	10	55	10	35	10	55	10
with long phase barriers 2)	Not permitted	Not permitted		Not permitted		Not permitted		Not permitted	
with long phase barriers (1st third) 1) + Insulating plate	0	0	10	0	10	0	10	0	10
With terminal cover long	0	35	10	55	10	35	10	55	10

1) Can be used for connection technology: box terminal, screw terminal, internal wire connector and rear terminals

2) Can be used for connection technology: wire connector large, front bus connectors extended, and front bus connectors offset

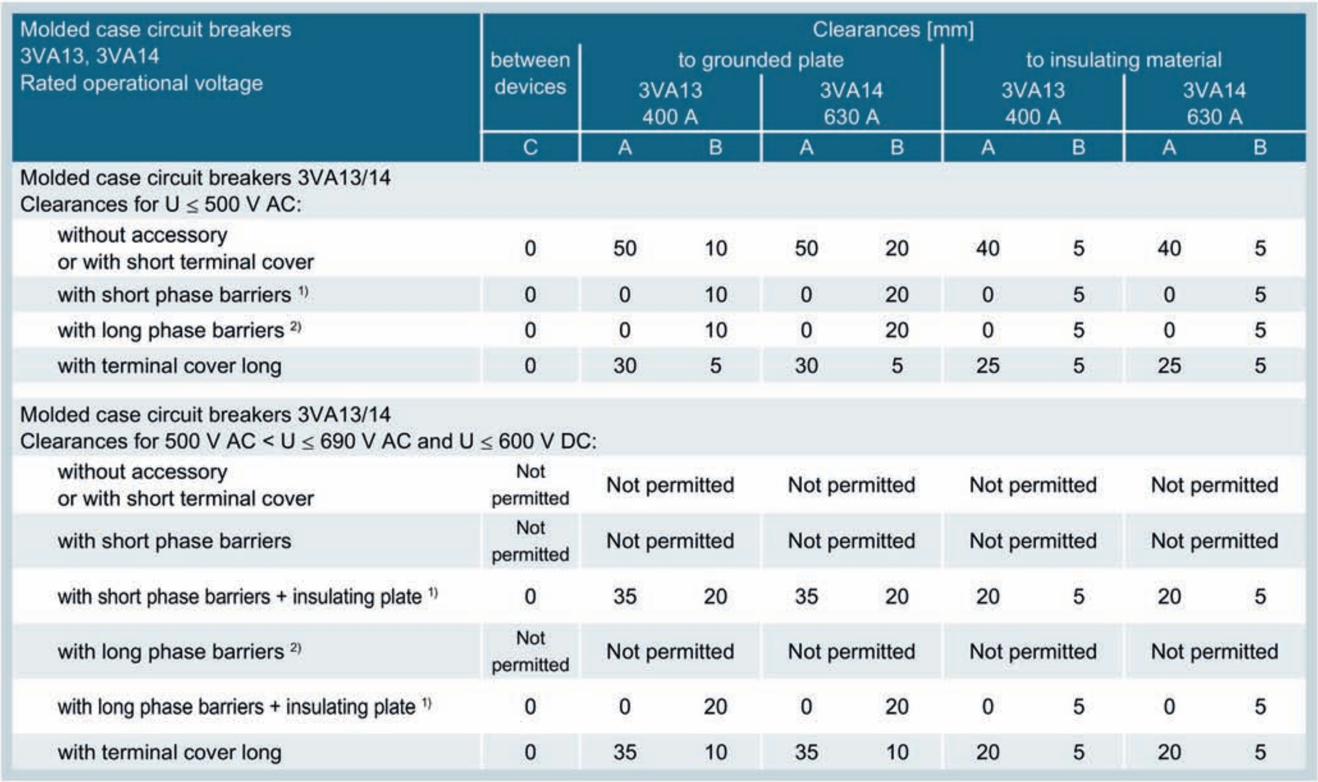

Molded case circuit breakers 3VA13, 3VA14 Rated operational voltage	Clearances [mm]								
	between devices	to grounded plate				to insulating material			
		3VA13 400 A		3VA14 630 A		3VA13 400 A		3VA14 630 A	
	C	A	B	A	B	A	B	A	B
Molded case circuit breakers 3VA13/14 Clearances for U ≤ 500 V AC:									
without accessory or with short terminal cover	0	50	10	50	20	40	5	40	5
with short phase barriers [1]	0	0	10	0	20	0	5	0	5
with long phase barriers [2]	0	0	10	0	20	0	5	0	5
with terminal cover long	0	30	5	30	5	25	5	25	5
Molded case circuit breakers 3VA13/14 Clearances for 500 V AC < U ≤ 690 V AC and U ≤ 600 V DC:									
without accessory or with short terminal cover	Not permitted	Not permitted		Not permitted		Not permitted		Not permitted	
with short phase barriers	Not permitted	Not permitted		Not permitted		Not permitted		Not permitted	
with short phase barriers + insulating plate [1]	0	35	20	35	20	20	5	20	5
with long phase barriers [2]	Not permitted	Not permitted		Not permitted		Not permitted		Not permitted	
with long phase barriers + insulating plate [1]	0	0	20	0	20	0	5	0	5
with terminal cover long	0	35	10	35	10	20	5	20	5

[1] Can be used for connection technology: box terminal, screw terminal, internal wire connector and rear terminals

[2] Can be used for connection technology: wire connector large, front bus connectors extended, and front bus connectors offset

Minimum clearance for 3VA2 molded case circuit breakers:

3VA2 molded case circuit breakers Rated operational voltage	Distances [mm]												
	between devices	to grounded plate						to insulating material					
		3VA20 3VA21 3VA22 100 A 160 A 250 A		3VA23 3) 250 A 400 A		3VA24 3) 400 A 630 A		3VA20 3VA21 3VA22 100 A 160 A 250 A		3VA23 3) 250 A 400 A		3VA24 3) 400 A 630 A	
	C	A	B	A	B	A	B	A	B	A	B	A	B
3VA2 molded case circuit breaker with / without residual current device U ≤ 500 V AC													
without accessory or with short terminal cover	0	40	5	50	10	50	20	30	5	40	5	40	5
with short phase barriers 1)	0	0	5	0	10	0	20	0	5	0	5	0	5
with long phase barriers 2)	0	0	5	0	10	0	20	0	5	0	5	0	5
with long terminal cover	0	25	5	30	5	30	5	25	5	25	5	25	5
3VA2 molded case circuit breaker with / without residual current device 500 V AC < U ≤ 690 V AC													
with short phase barriers + insulating plate	0	35	20	35	20	35	20	20	5	20	5	20	5
with long phase barriers + insulating plate	0	0	20	0	20	0	20	0	5	0	5	0	5
with long terminal cover	0	35	10	35	10	35	10	20	5	20	5	20	5

1) Can be used for connection technology: box terminal, screw terminal, internal wire connector and rear terminals

2) Can be used for connection technology: wire connector large, front bus connectors extended, and front bus connectors offset

3) Does not apply to breaking capacity class L

3VA25 molded case circuit breakers Rated operational voltage	Distances [mm]		
	between devices	to grounded plate	
	3VA25 630 A, 800 A, 1000 A		
	C	A	B
3VA25 molded case circuit breaker U ≤ 415 V			
with short terminal cover	0	50	15
3VA25 molded case circuit breaker 415 V < U ≤ 1000 V			
with short terminal cover	0	75	15

Note

In addition to the clearances stated above, any insulation measures that might be required must also be considered, see chapter Insulating measures (Page 246).
If the molded case circuit breaker is installed in a system whose connection type and operational voltage does not correspond to the specified insulation measures, a type test is required.

It must be ensured that the cable or busbar connector does not reduce the air insulation clearance.

Accessory components can increase the width or height of the molded case circuit breaker. In this case the minimum clearances apply from the corresponding sides of the overall molded case circuit breaker/accessory combination.

NOTICE
Damage to the molded case circuit breaker and the system
Depending on the application, larger minimum clearances may be necessary.
Please observe the specifications regarding air and creepage distances in the applicable overriding guidelines (e.g. IEC 61439).

Safety clearances between molded case circuit breakers

No minimum clearance needs to be observed between the molded case circuit breakers on the longitudinal sides (see table above).

The following safety clearances apply to molded case circuit breakers installed directly on top of each other (for operation in the same network or at the same operational voltage):

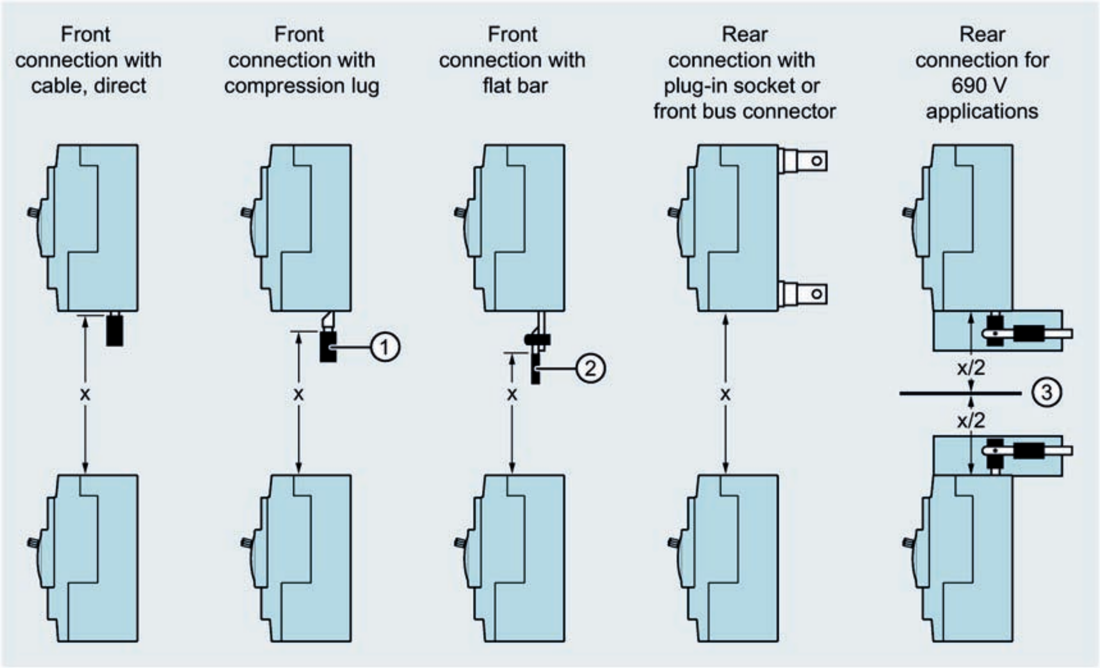

x See tables below for minimum clearance
① Insulation of cable
② Insulation of busbar
③ Insulation between the molded case circuit breakers

Minimum clearance for 3VA1 molded case circuit breakers:

3VA1 molded case circuit breakers Rated operational voltage	3VA10 / 3VA11 100 A / 160 A x [mm]	3VA12 250 A x [mm]	3VA13 / 3VA14 400 A / 630 A x [mm]
U ≤ 690 V AC U ≤ 600 V DC	150	150	150

Minimum clearance for 3VA2 molded case circuit breakers:

3VA2 molded case circuit breakers Rated operational voltage	3VA20 / 3VA21 / 3VA22 100 A / 160 A / 250 A x [mm]	3VA23 400 A x [mm]	3VA24 630 A x [mm]
U ≤ 525 V	80	100	100
525 V < U ≤ 690 V	150	200	100

Maximum clearance to first fixing point of cable or busbar

The figure and table show the recommended maximum clearance between molded case circuit breakers and the first fixing point of the cable or busbar.

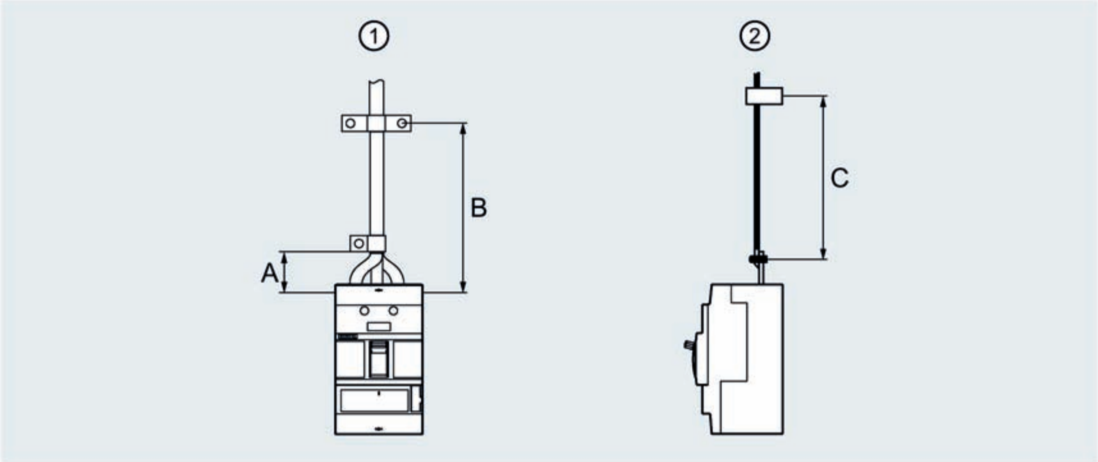

① Fixing of cable

② Fixing of busbar

Recommended maximum clearance for 3VA1 molded case circuit breakers:

The values for the 3VA1 molded case circuit breakers are available from Siemens on request.

Recommended maximum clearance for 3VA2 molded case circuit breakers:

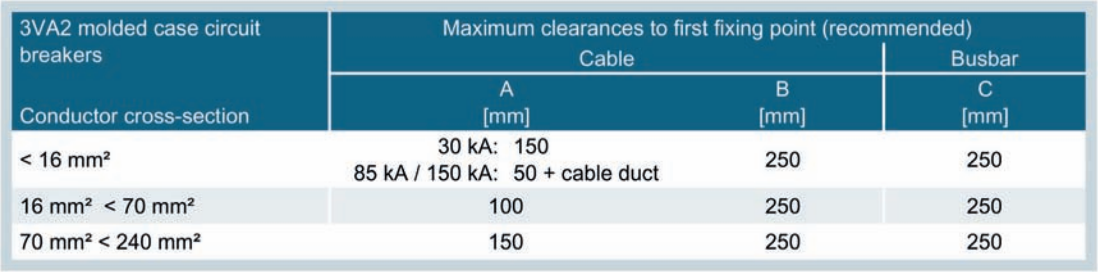

3VA2 molded case circuit breakers	Maximum clearances to first fixing point (recommended)		
	Cable		Busbar
Conductor cross-section	A [mm]	B [mm]	C [mm]
< 16 mm²	30 kA: 150 85 kA / 150 kA: 50 + cable duct	250	250
16 mm² < 70 mm²	100	250	250
70 mm² < 240 mm²	150	250	250

2.5.7 Arcing spaces

Adequate arcing spaces must be taken into account during planning and installation of the molded case circuit breakers.

In particular, the following must be observed:

- Ventilation openings must be kept free.
- Ionized gases must not be routed in the direction of connecting terminals or non-insulated busbars.
- Arcing spaces must not be blocked by busbars installed too close to one another or by other objects.

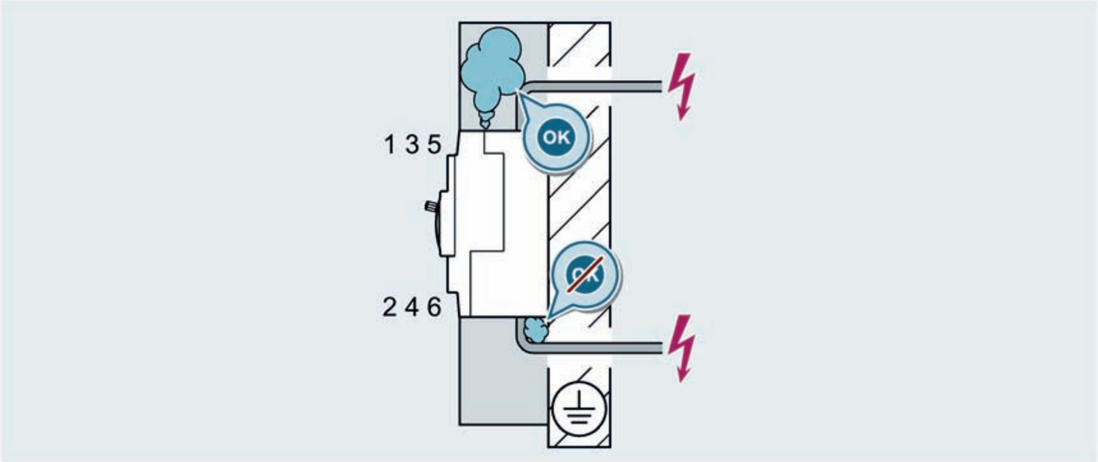

The 3VA molded case circuit breakers up to size 630 A have a rotary double-contact system and therefore blow out upwards and downwards. The upper blowout openings (at terminals 1, 3, 5) are located above the connections and the lower blowout openings (at terminals 2, 4, 6) are located below them.

The 3VA molded case circuit breakers in size 1000 A (3VA25) only blow upwards, i.e. in the direction of terminals 1, 3, 5, as they have a single-contact system.

2.5.8 Degrees of protection

3VA molded case circuit breakers comply with the following degrees of protection as defined by IEC 60529 and IEC 60947-1, Annex C:

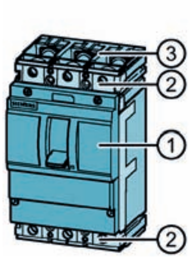

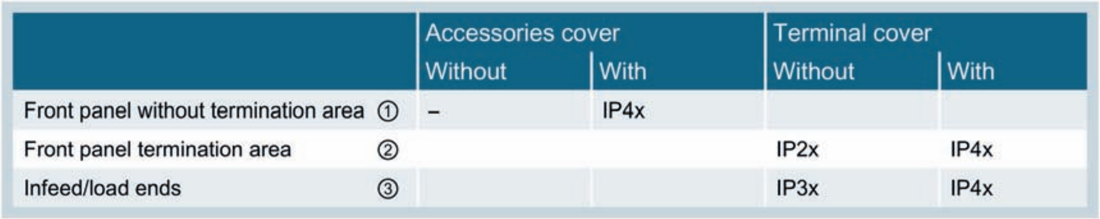

	Accessories cover		Terminal cover	
	Without	With	Without	With
Front panel without termination area ①	–	IP4x		
Front panel termination area ②			IP2x	IP4x
Infeed/load ends ③			IP3x	IP4x

Degree of protection IP30 is achieved when a 3VA molded case circuit breaker is installed in a switchboard with a door cutout including cover frame (see below).

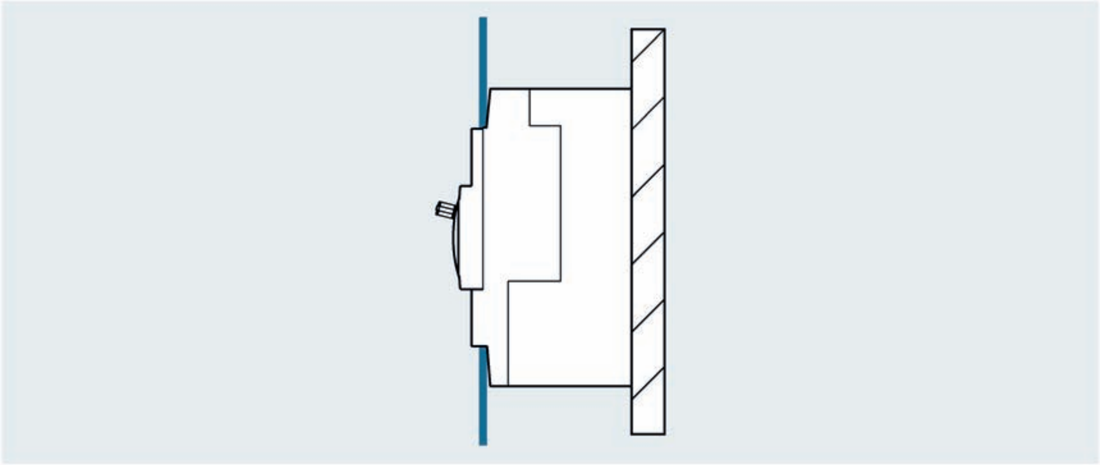

Handle and trip unit are freely accessible, the panel door closes flush with the molded case circuit breaker.

The units can be upgraded to comply with higher degrees of protection up to IP65 by installation of the following components:

- Door mounted rotary operator
- Side wall mounted rotary operator

2.5.9 Environmental protection

The 3VA1 and 3VA2 molded case circuit breakers meet the specifications of the European Environment Guideline 2011 / 65 / EU RoHS directive (Restriction of the use of certain hazardous substances in electrical and electronic equipment). The development and production processes have been devised to have the lowest possible environmental impact.

2.6 Protection system

This chapter contains an overview of the protection system of 3VA molded case circuit breakers.

The topics discussed in this chapter are listed below:

- Description of functions
- Overload protection (L)
- Short-time delayed short-circuit protection (S)
- Instantaneous short-circuit protection (I)
- Ground-fault protection (G)
- Neutral conductor protection (N)
- ZSI - Zone Selective Interlocking
- Guide to setting the tripping characteristic

2.6.1 Description of functions

The protection function performed by the molded case circuit breaker in the power distribution network is defined by the choice of trip unit. There are two different types of trip unit, i.e. thermal-magnetic (TMTU) and electronic (ETU):

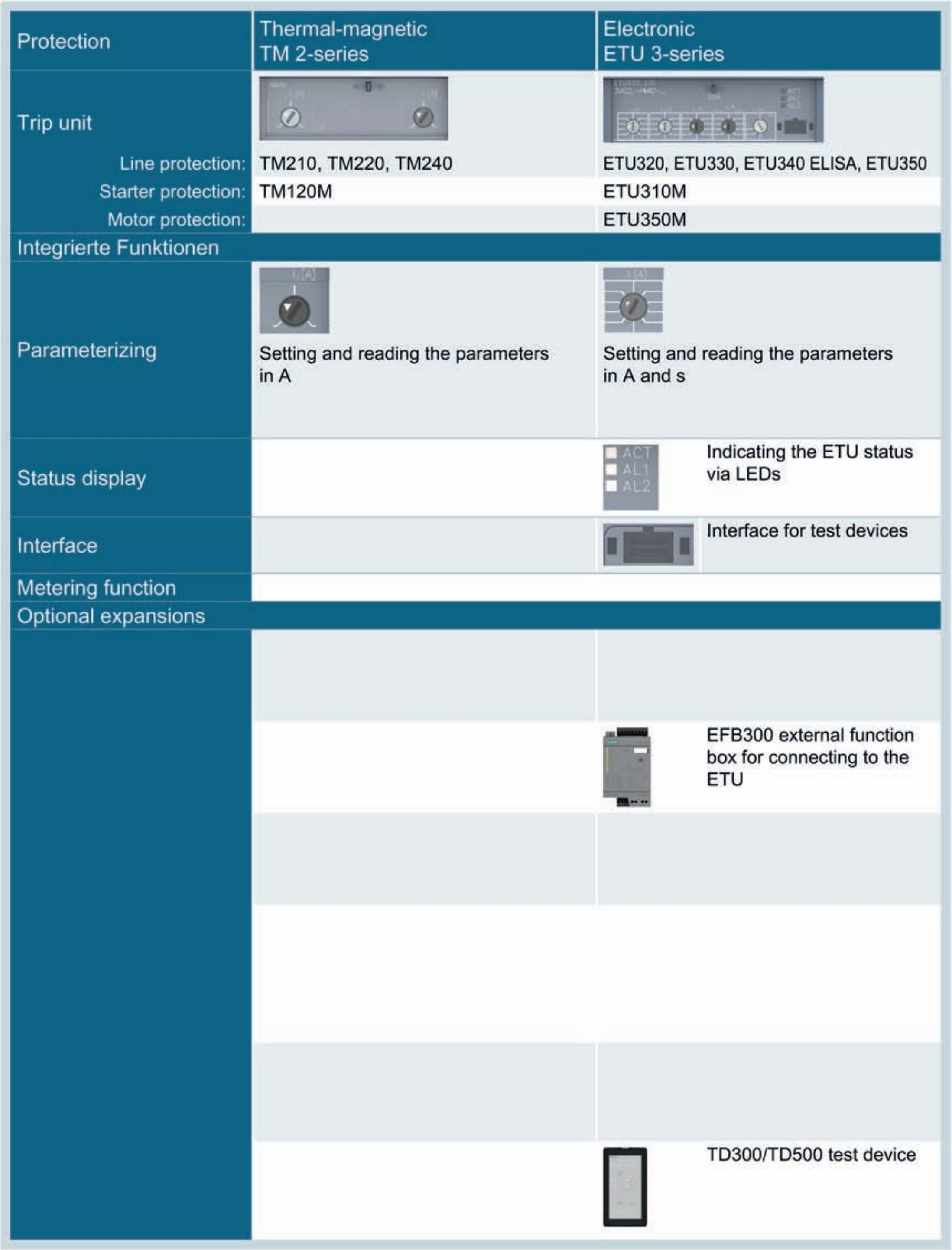

Protection	Thermal-magnetic TM 2-series	Electronic ETU 3-series	
Trip unit			
Line protection:	TM210, TM220, TM240	ETU320, ETU330, ETU340 ELISA, ETU350	
Starter protection:	TM120M	ETU310M	
Motor protection:		ETU350M	
Integrierte Funktionen			
Parameterizing	Setting and reading the parameters in A	Setting and reading the parameters in A and s	
Status display			Indicating the ETU status via LEDs
Interface			Interface for test devices
Metering function			
Optional expansions			
			EFB300 external function box for connecting to the ETU
			TD300/TD500 test device

Protection	Electronic with display ETU 5-series	Electronic with display and metering function ETU 8-series
Trip unit		
Line protection:	ETU550, ETU560	ETU850, ETU860
Starter protection:		
Motor protection:	ETU550M	ETU860M
Integrated functions		
Parameterizing	- Setting and reading the parameters via display and communication - Fine setting of the parameters - Reading the measured values	- Setting and reading the parameters via display and communication - Fine setting of the parameters - Reading the measured values
Status display	☐ ACT ☐ COM ☐ AL1 ☐ AL2 Indicating the ETU status via LEDs	☐ ACT ☐ COM ☐ AL1 ☐ AL2 Indicating the ETU status via LEDs
Interface	Interface for test devices	Interface for test devices
Metering function		Metering function integrated
Optional expansions		
	24 V module for continuous power supply (also without primary current through the molded case circuit breaker)	24 V module for continuous power supply (also without primary current through the molded case circuit breaker)
	EFB300 external function box for connecting to the ETU	EFB300 external function box for connecting to the ETU
	COM060 communication module	COM060 communication module
	COM800/COM100 breaker data server Interface to - PROFIBUS - PROFINET - Modbus RTU - Ethernet (Modbus TCP)	COM800/COM100 breaker data server Interface to - PROFIBUS - PROFINET - Modbus RTU - Ethernet (Modbus TCP)
	DSP800 external display for installing in the cubicle door	DSP800 external display for installing in the cubicle door
	TD300/TD500 test device	TD300/TD500 test device

2.6.2 Characteristic curves

To design a low-voltage switchboard in accordance with the valid rules, the system planner needs to dimension the protection settings of the molded case circuit breakers.

The settings selected for the trip unit of a molded case circuit breaker depend on the type of equipment to be protected, e.g. switchboard and applications.

Tripping characteristics up to a tripping time of ≥ 1 ms are represented graphically. In order to ease the coordination of different protection devices, the current is specified as a multiple of the current setting value and the time is specified in seconds.

Tripping characteristics for thermal-magnetic trip units

Characteristics are displayed graphically in the double-log coordinate system (cf. IEC 60947-2, paragraph 4.7.4 and IEC 60269-1). The ratio of current to time is 2: 1.

Tripping characteristics for electronic trip units

Characteristics are displayed graphically in the double-log coordinate system (cf. IEC 60269-1). The ratio of current to time is 1: 1.

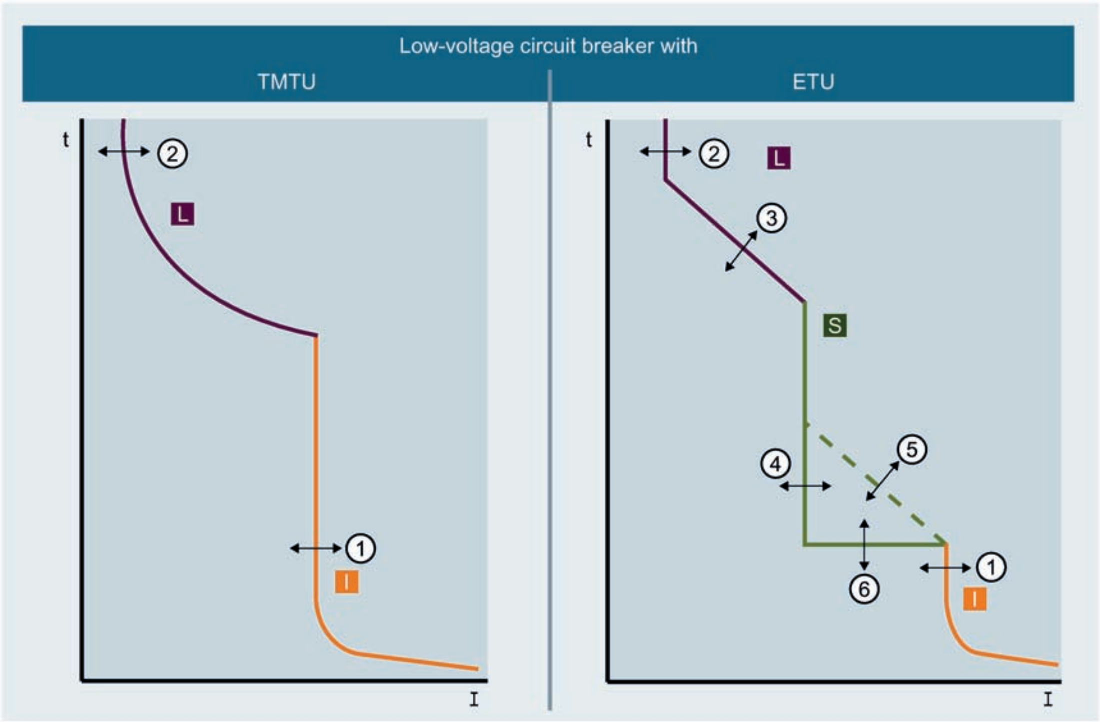

① Response threshold of the long-time delayed protection, thermal

② Response threshold of the long-time delayed protection

③ Delay of the long-time delayed protection

④ Response threshold of the short-time delayed protection

⑤ I²t characteristic ON/OFF of the short-time delayed protection

⑥ Delay of the short-time delayed protection

⑦ Response threshold of the instantaneous protection

L Overload range

S Short-time delayed short-circuit current range

I Instantaneous short-circuit current range

2.6.3 Guide to setting the tripping characteristic

Supplementary conditions

The settings selected for the trip unit of a molded case circuit breaker depend on the technical environment (e.g. switchboard and applications) and the type of equipment to be protected. The task of calculating and dimensioning the protection settings in accordance with the valid rules is the responsibility of the system planner.

SIMARIS design

The Siemens SIMARIS design software tool is a fast, simple and reliable tool for calculating and dimensioning networks in accordance with the valid rules:

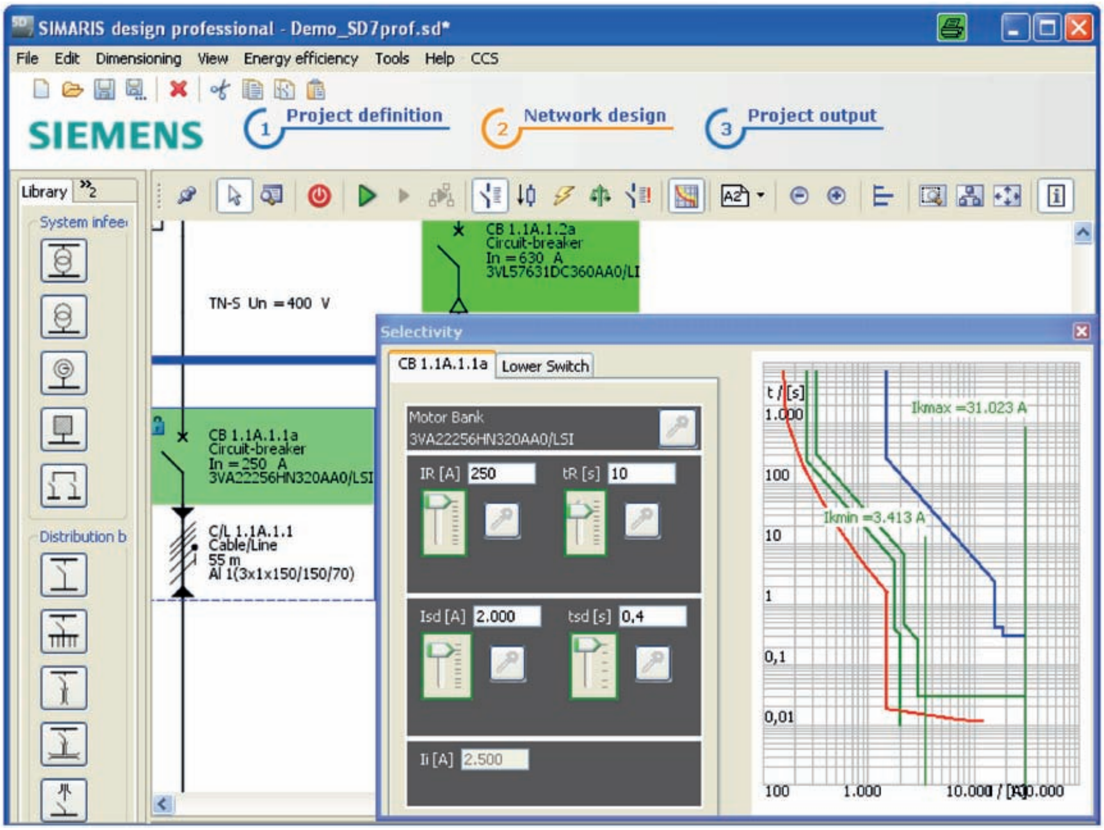

IR [A] 250

tR [s] 10

Isd [A] 2.000

tsd [s] 0,4

Ii [A] 2.500

For further information about SIMARIS design, please visit:

(http://www.siemens.com/simaris)

Basic rules for setting different trip parameters

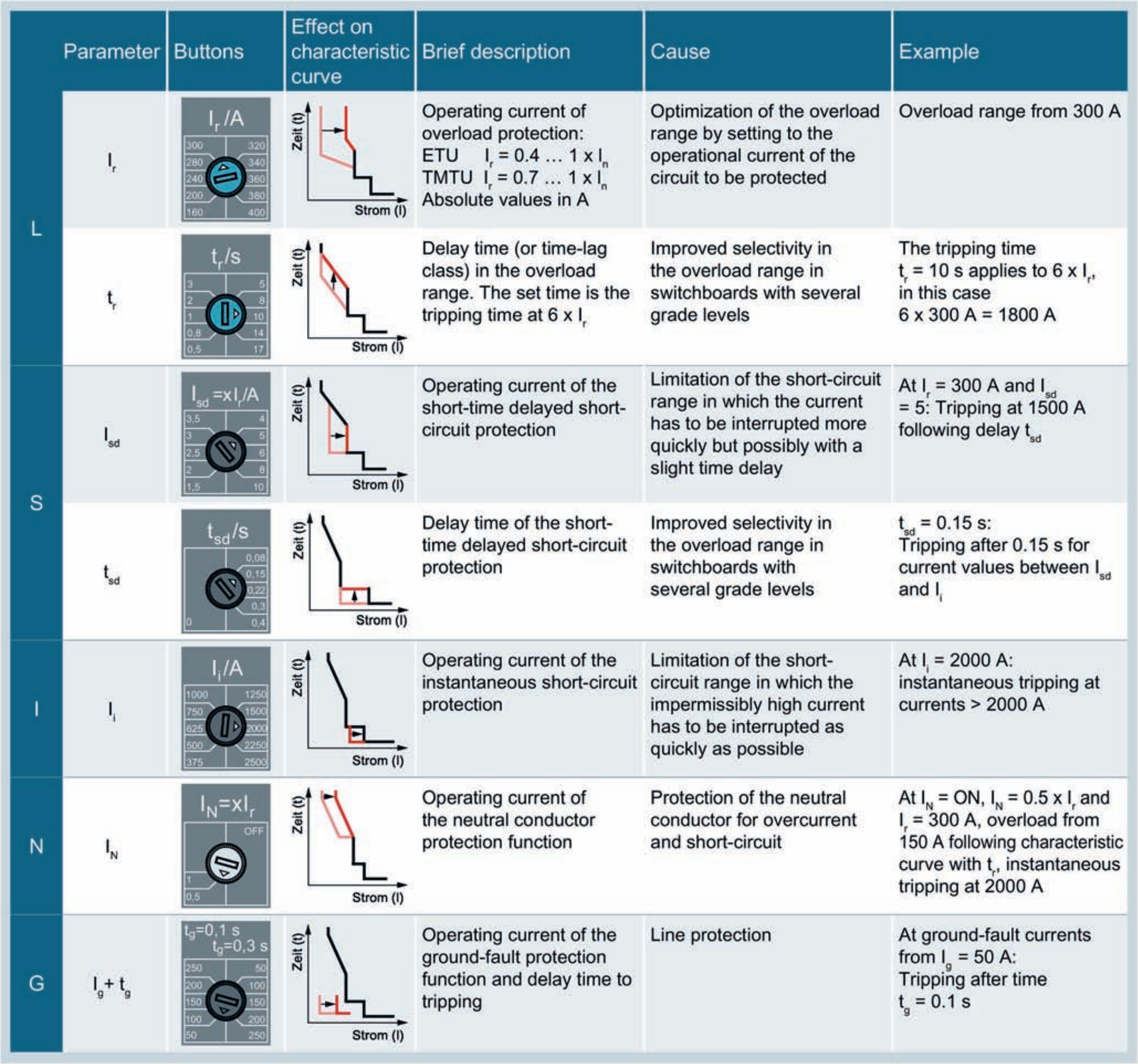

	Parameter	Buttons	Effect on characteristic curve	Brief description	Cause	Example
L	I_r	I_r/A		Operating current of overload protection: ETU I_r = 0.4 … 1 x I_n TMTU I_r = 0.7 … 1 x I_n Absolute values in A	Optimization of the overload range by setting to the operational current of the circuit to be protected	Overload range from 300 A
	t_r	t_r/s		Delay time (or time-lag class) in the overload range. The set time is the tripping time at 6 x I_r	Improved selectivity in the overload range in switchboards with several grade levels	The tripping time t_r = 10 s applies to 6 x I_r, in this case 6 x 300 A = 1800 A
S	I_{sd}	I_{sd} =xI_r/A		Operating current of the short-time delayed short-circuit protection	Limitation of the short-circuit range in which the current has to be interrupted more quickly but possibly with a slight time delay	At I_r = 300 A and I_{sd} = 5: Tripping at 1500 A following delay t_{sd}
	t_{sd}	t_{sd}/s		Delay time of the short-time delayed short-circuit protection	Improved selectivity in the overload range in switchboards with several grade levels	t_{sd} = 0.15 s: Tripping after 0.15 s for current values between I_{sd} and I_i
I	I_i	I_i/A		Operating current of the instantaneous short-circuit protection	Limitation of the short-circuit range in which the impermissibly high current has to be interrupted as quickly as possible	At I_i = 2000 A: instantaneous tripping at currents > 2000 A
N	I_N	I_N=xI_r		Operating current of the neutral conductor protection function	Protection of the neutral conductor for overcurrent and short-circuit	At I_N = ON, I_N = 0.5 x I_r and I_r = 300 A, overload from 150 A following characteristic curve with t_r, instantaneous tripping at 2000 A
G	I_g + t_g	t_g=0,1 s t_g=0,3 s		Operating current of the ground-fault protection function and delay time to tripping	Line protection	At ground-fault currents from I_g = 50 A: Tripping after time t_g = 0.1 s

Setting the parameters for electronic trip units of the ETU 5-series and 8-series

ETUs 5-series and ETUs 8-series are equipped with an LCD.

Parameter settings can be adjusted via this LCD, values are input by means of buttons. The powerconfig software can also be used to input parameter settings. The TD500 test device and the COM800/COM100 breaker data server combined with the COM060 communication module can be used as the software interface.

2.6.4 Overload protection (L)

The ID letter for overload protection is L (stands for "Long-time delay").

The trip unit is inverse-time delayed and exhibits the following characteristics depending on the trip unit type:

- Bimetal characteristic with thermal-magnetic trip units
- I^2t characteristic with electronic trip units

The letters I_r refer to the current setting value, and t_r to the associated time delay.

The time delay with the device-specific reference point defines the current-dependent curve shape of the setpoint characteristic. With 3VA molded case circuit breakers, this trip unit reference point corresponds to 6 times the current setting value I_r. The following mathematical equation determines the remaining curve of the setpoint characteristic:

I^2t = constant

Thermal memory

The electronic trip units feature a thermal memory function that can be deactivated on some electronic overload releases.

Thermal memory activated (ON)

If the thermal memory is activated, the previous thermal history is taken into account. After tripping, the thermal memories of the phases are set to a value corresponding to 85% of the thermal equivalent of the warmest phase. This setting allows reclosure of the contacts of the molded case circuit breaker. This is followed by a cool-down period according to an exponential function with a time constant T_{au} (τ).

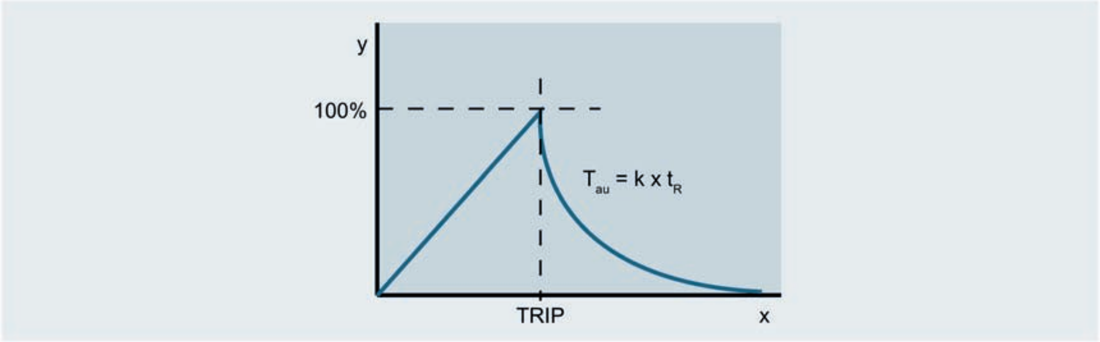

Thermal memory deactivated (OFF)

It is the responsibility of the commissioning engineer/operator to provide additional thermal overload protection for the lower-level power distribution system while the thermal memory is deactivated.

2.6.5 Short-time delayed short-circuit protection (S)

The ID letter for short-time delayed short-circuit protection is "S" (stands for "Short-time delay"). The S function of the trip unit can be used to implement time-selective short-circuit tripping in low-voltage networks in which multiple molded case circuit breakers are installed in series.

The short-time delayed short-circuit protection function protects phases L1 to L3 and the neutral conductor. The protection function responds if the current in at least one phase exceeds the set tripping current I_{sd} for the set delay period t_{sd}.

The S release has a characteristic curve with current-dependent characteristic I^2t, i.e. the delay time is dependent on the energy content of the short-circuit current present. The ETUs 5-series and ETUs 8-series can be optionally switched over to a current-independent tripping characteristic. In this case, a fixed delay time t_{sd} applies.

2.6.6 Instantaneous short-circuit protection (I)

The ID letter for instantaneous short-circuit protection is "I" (stands for "Instantaneous").

This short-circuit protection function protects phases L1 to L3. The instantaneous short-circuit protection function responds if the instantaneous value equal to the rms of the current in at least one phase exceeds the instantaneous tripping current I_i.

2.6.7 Ground-fault protection (G)

The ID letter for ground-fault protection is "G" (stands for "ground fault").

The G release detects residual currents between phases and grounded, electrically conductive parts. The ground-fault protection function responds if the ground fault current exceeds the set tripping current I_g for the set delay period t_g.

Ground-fault protection can be implemented either as a current-independent or a current-dependent function (I^2t).

On 4-pole molded case circuit breakers and 3-pole molded case circuit breakers with external current transformer for the N conductor, the G release calculates the vector sum of the currents of the three phases and the neutral conductor. On 3-pole molded case circuit breakers, the vector sum is calculated without the neutral conductor. The G release trips the circuit breaker, or an alarm is issued via the communication system if the rms value of this vector sum exceeds the set response threshold I_g for the set delay time t_g.

Ground-fault detection in balanced systems

The three phase currents are evaluated using vectorial summation current.

3VA trip unit variants

- ETUs 3-series: ETU330 (LIG)
- ETUs 5-series: ETU560 (LSIG)
- ETUs 8-series: ETU860 (LSIG)

3-pole molded case circuit breaker in balanced systems:

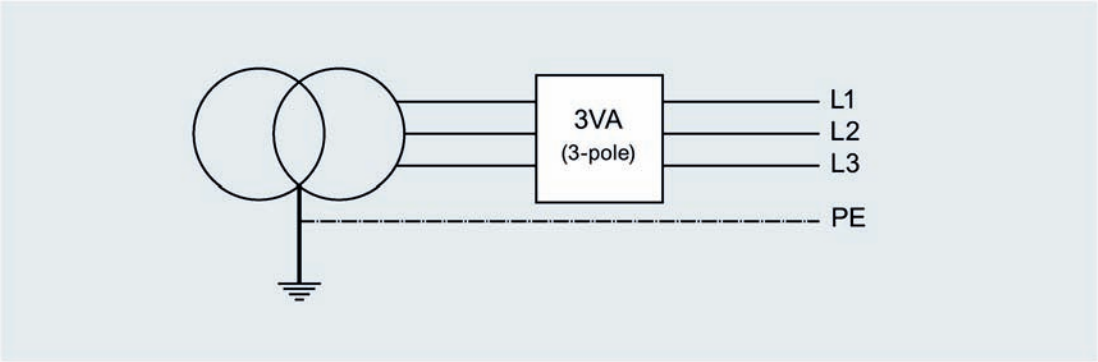

Ground-fault detection in unbalanced systems

The neutral conductor current is measured directly and in the case of 3-pole molded case circuit breakers only for the ground-fault protection, but in the case of 4-pole circuit breakers the neutral conductor current is also evaluated for the neutral conductor protection.

The trip unit calculates the ground-fault current using the three phase currents and the neutral conductor current for the vectorial summation.

3-pole molded case circuit breaker in unbalanced systems, 3-pole 3VA with external N transformer:

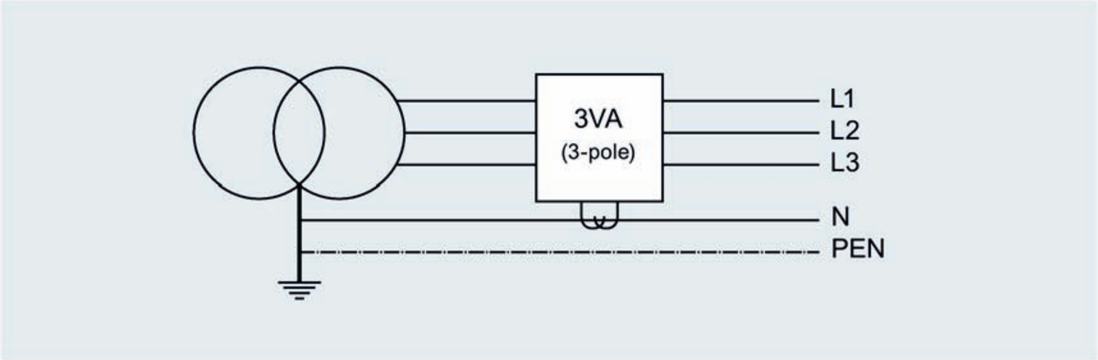

3VA trip unit variants, 3-pole 3VA2 with external N transformer

- ETUs 5-series: ETU560 (LSIG)
- ETUs 8-series: ETU860 (LSIG)

For 4-pole molded case circuit breakers, the fourth current transformer is internally installed for the neutral conductor.

4-pole molded case circuit breaker in unbalanced systems:

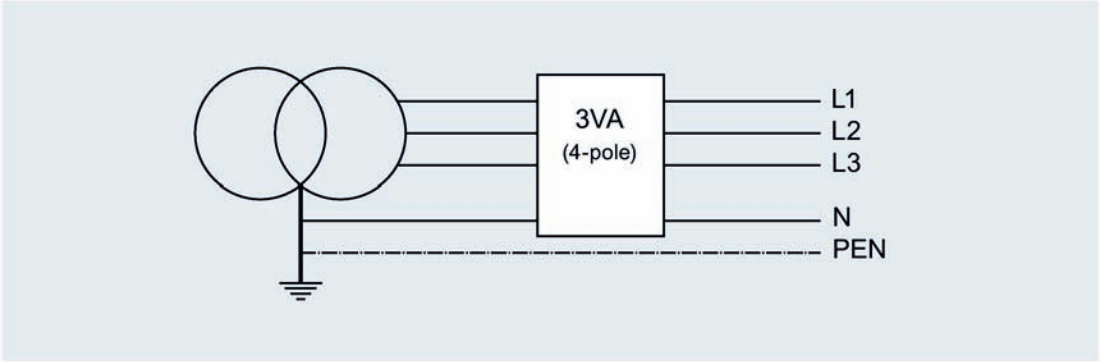

3VA trip unit variants, 4-pole 3VA2

- ETUs 3-series: ETU330 (LIG)
- ETUs 5-series: ETU560 (LSIG)
- ETUs 8-series: ETU860 (LSIG)

2.6.8 Neutral conductor protection (N)

The ID letter for neutral conductor protection is "N".

The neutral conductor protection system protects the neutral conductor against overloads and short circuits.

The letters I_N refer to the current setting value; the associated setting time is identical to t_r.

Note

A neutral conductor with full cross sectional area (distributed neutral conductor of the same size as the phases) is normally protected by the phase protection system and does not require separate protection.

Neutral conductor protection

Neutral conductor protection must be implemented in accordance with the standards valid in the country of installation. Possible reasons for implementing neutral conductor overload protection are:

- The neutral conductor has a smaller cross section than the phase conductors.
- Harmonic levels in the installation are expected to be higher than normal.
- A large number of loads, or predominantly single-phase loads, will be connected.

Neutral conductor protection and 3VA1 molded case circuit breakers

The following 3VA1 molded case circuit breakers have neutral conductor protection:

- All 4-pole versions of 3VA11, 3VA12, 3VA13, 3VA14 (TM210, TM220, TM240)

All of these molded case circuit breakers are available in versions without or with 100% neutral conductor protection. A version with 50% neutral conductor protection is available in addition for rated operational currents greater than 100 A.

3VA1 Size	Trip unit	Neutral conductor protection		
		0 %	50 %	100 %
3VA10	TM210	■		
3VA11	TM210	■	■	■
	TM220	■	■	■
	TM240	■	■	■
3VA12	TM240	■	■	■
3VA13	TM240	■	■	■
3VA14	TM240	■	■	■

Neutral conductor protection and 3VA2 molded case circuit breakers

The following versions of 3VA2 molded case circuit breaker have neutral conductor protection:

- All 3-pole versions with external current transformer for N conductor
- All 4-pole versions

The tripping systems of the 5-series and 8-series ETUs enable overdimensioning of the neutral conductor protection up to 160% of I_n. This might be necessary to provide protection against third-order harmonics and multiples thereof.

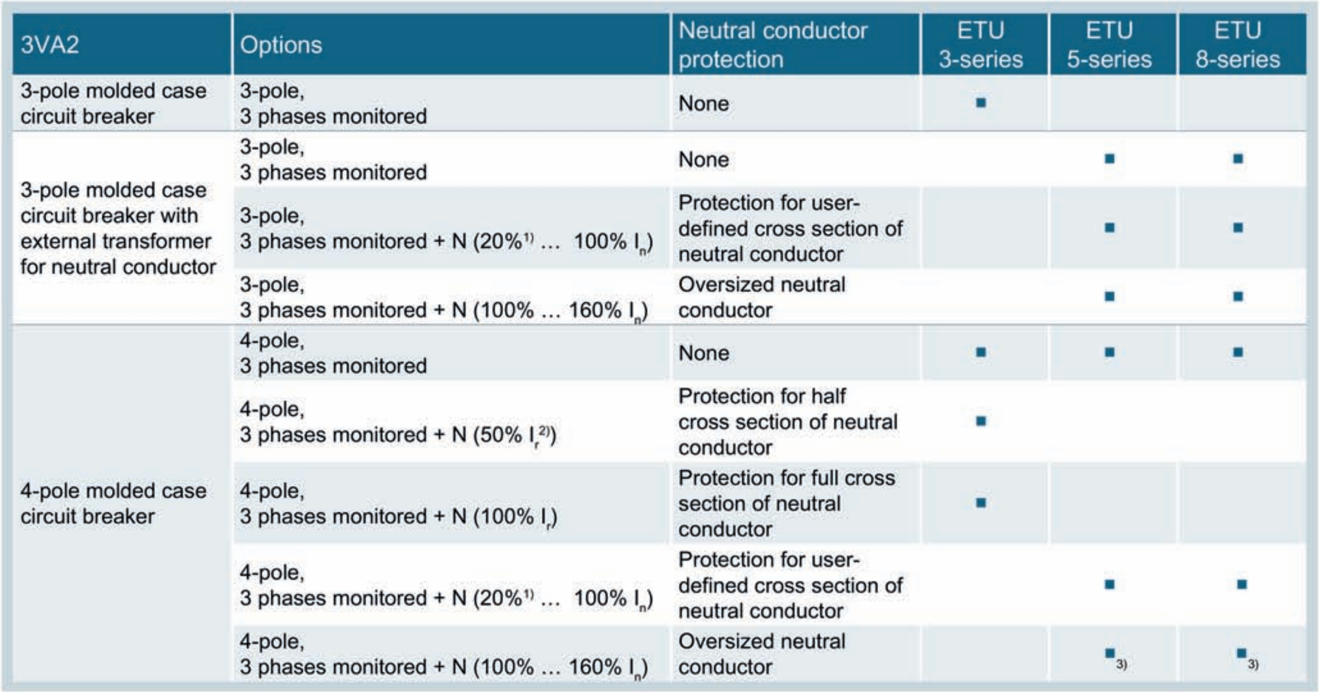

3VA2	Options	Neutral conductor protection	ETU 3-series	ETU 5-series	ETU 8-series
3-pole molded case circuit breaker	3-pole, 3 phases monitored	None	■		
3-pole molded case circuit breaker with external transformer for neutral conductor	3-pole, 3 phases monitored	None		■	■
	3-pole, 3 phases monitored + N (20%[1] … 100% I_n)	Protection for user-defined cross section of neutral conductor		■	■
	3-pole, 3 phases monitored + N (100% … 160% I_n)	Oversized neutral conductor		■	■
4-pole molded case circuit breaker	4-pole, 3 phases monitored	None	■	■	■
	4-pole, 3 phases monitored + N (50% I_r[2])	Protection for half cross section of neutral conductor	■		
	4-pole, 3 phases monitored + N (100% I_r)	Protection for full cross section of neutral conductor	■		
	4-pole, 3 phases monitored + N (20%[1] … 100% I_n)	Protection for user-defined cross section of neutral conductor		■	■
	4-pole, 3 phases monitored + N (100% … 160% I_n)	Oversized neutral conductor		■[3]	■[3]

N Neutral conductor protection

[1] At rated operational currents $I_n \leq 63$ A: I_N = 40 % … 100 % I_n

[2] Applies to $I_n > 63$ A

[3] Dependent on circuit breaker size and rated operational current

Parameters of the neutral conductor protection function

- Tripping current I_N:
  Adjustable as a proportion of the current setting (I_r) for overload protection
- Tripping delay:
  Corresponds to the delay setting (t_r) for overload protection
- Tripping current of the short-time delayed short-circuit protection:
  Corresponds to the short-time delayed short-circuit protection (I_{sd})
- Tripping delay:
  Corresponds to the delay setting for short-time delayed short-circuit protection (t_{sd})
- Instantaneous short-circuit protection:
  Corresponds to the tripping current (I_i) for instantaneous short-circuit protection

You will find information about setting options in chapter Line protection applications of 3VA molded case circuit breakers (Page 110).

Example of a neutral conductor protection characteristic

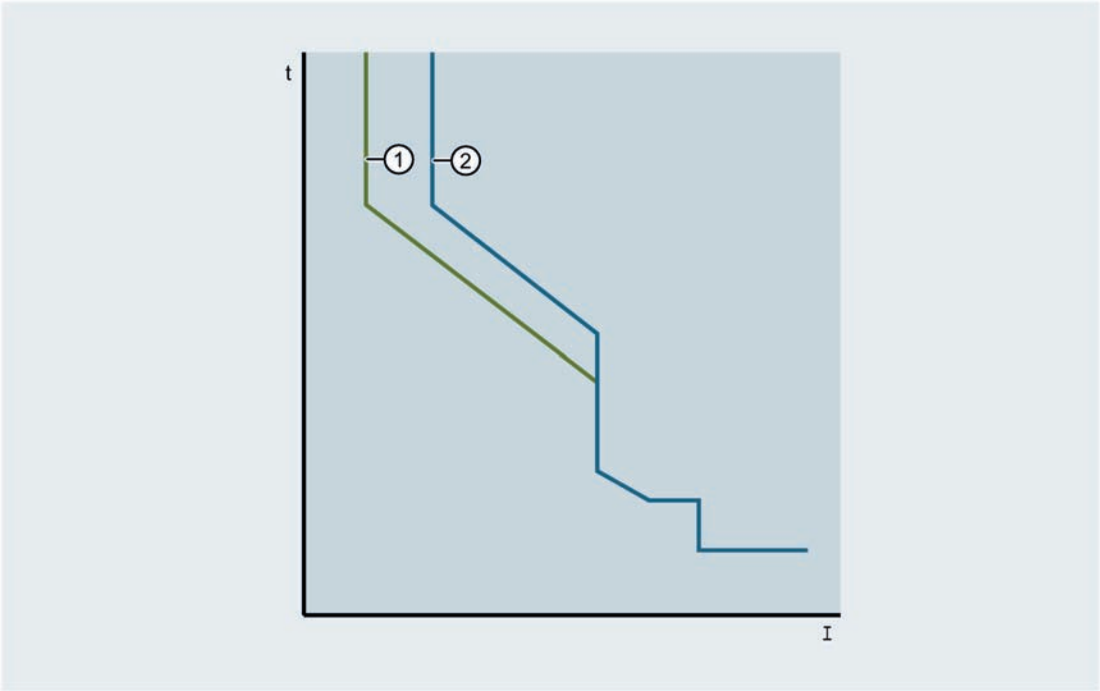

① Response threshold of the neutral conductor protection
② Response threshold of the long-time delayed protection

Adjustment of neutral conductor protection settings

The tripping current I_N can be adjusted:

- for ETU 3-series via rotary selector switches
- for ETUs 5-series and 8-series
  - via the buttons on the ETU display
  - via a PC using powerconfig

2.6.9 Zone selective interlocking (ZSI)

Microprocessor-controlled, zone selective interlocking (ZSI) has been developed in order to control the total breaking time in low-voltage networks with multiple molded case circuit breakers connected in series.

Regardless of the number of series-connected molded case circuit breakers, all short circuits in the network can be cleared within a maximum time period of 50 ms.

Note

Backward compatibility

The ZSI function of the 3VA molded case circuit breakers is compatible with the ZSI function of the Siemens 3WL air circuit breakers.

Operating principle

The diagram below illustrates the operating principle of zone selective interlocking:

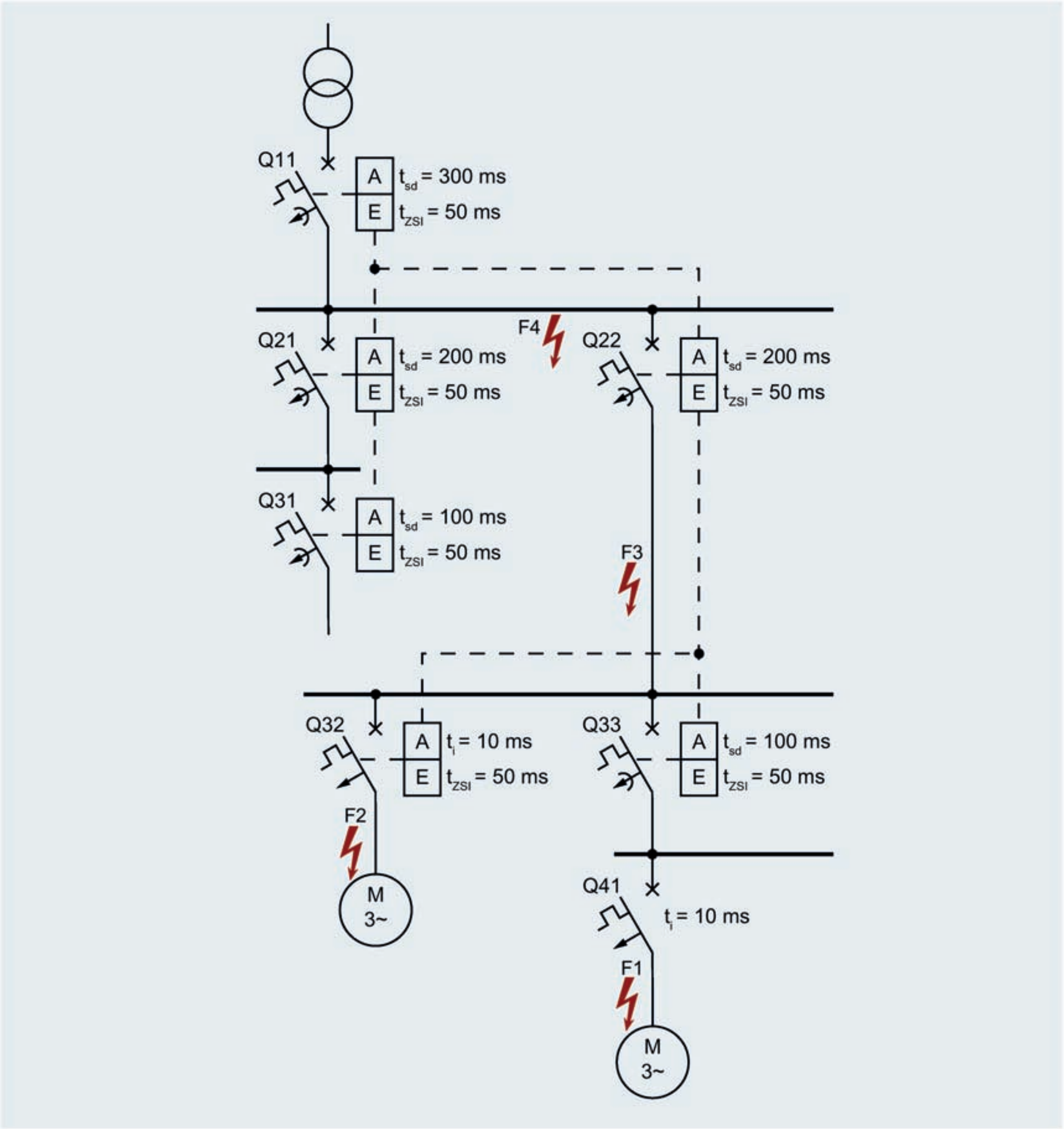

- - -	Communication cable	t_i	"Virtual" tripping time of I protection
A	Output, transmits the blocking signal	t_{SD}	Delay time setting of S protection
E	Input, receives the blocking signal	t_{ZSI}	Delay time of all molded case circuit breakers which detect the short circuit but do not receive a blocking signal when ZSI is activated

The ZSI function acts on the S and G ranges of the tripping characteristic. Currents within the I range (instantaneous short circuit) continue to cause instantaneous tripping.

Fault 1

If the short-circuit current is sufficiently large, the trip units of molded case circuit breakers Q41, Q33, Q22 and Q11 are activated. Since Q41 clears the fault within t_i = 10 ms, none of the other molded case circuit breakers trips even though Q41 has no ZSI and cannot therefore transmit a blocking signal to Q33.

Fault 2

If the short-circuit current is sufficiently large, the trip units of molded case circuit breakers Q32, Q22 and Q11 are activated. As a result of the ZSI function, Q32 temporarily blocks Q22 which in turn temporarily blocks Q11. Depending on the magnitude of the short-circuit current, the fault is cleared either within t_i = 10 ms or t_{zsi} = 50 ms.

Fault 3

Q22 signals short-circuit protection to Q11 with the result that only Q22 trips when delay time t_{zsi} = 50 ms expires. Without the ZSI function, the fault would not be cleared until t_{sd} = 200 ms had expired.

Fault 4

The short circuit is detected only by Q11. Since Q11 does not receive a blocking signal from the downstream molded case circuit breakers, it trips after t_{zsi} = 50 ms. Without the ZSI function, Q11 would not trip until t_{sd} = 300 ms had expired.

It is especially important to minimize breaking times when short circuits involving very high short-circuit currents occur.

2.7 Thermal-magnetic trip unit

A thermal-magnetic trip unit consists of a thermal trip unit for protecting against overload, and a magnetic trip unit for protecting against short circuits. Both trip units are series-connected.

2.7.1 Thermal trip unit (L)

The thermal trip unit consists of a temperature-dependent bimetal that heats up as a result of the flow of current. This means the trip unit is current-dependent. The temperature rise in the bimetal strip depends not only on the current magnitude, but also on the ambient temperature of the molded case circuit breaker. All current values specified for thermal-magnetic trip units of 3VA circuit breakers refer to an ambient temperature of +50 °C.

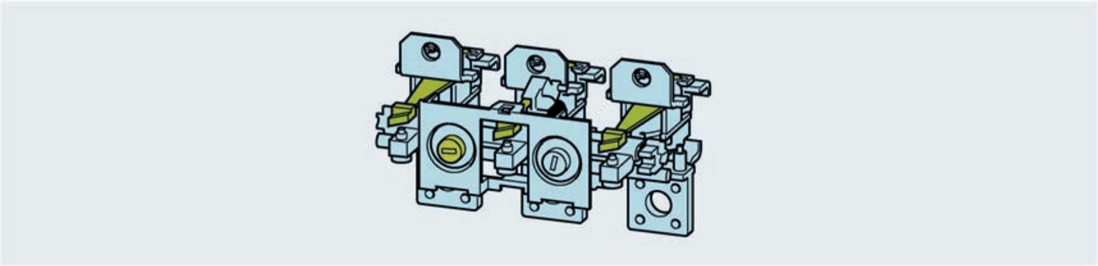

2.7.2 Magnetic trip unit with short-circuit protection (I)

The magnetic trip unit with short-circuit protection comprises a yoke mounting through which a current path runs, and a flap armature that is kept at a distance from the yoke mounting by a tension spring.

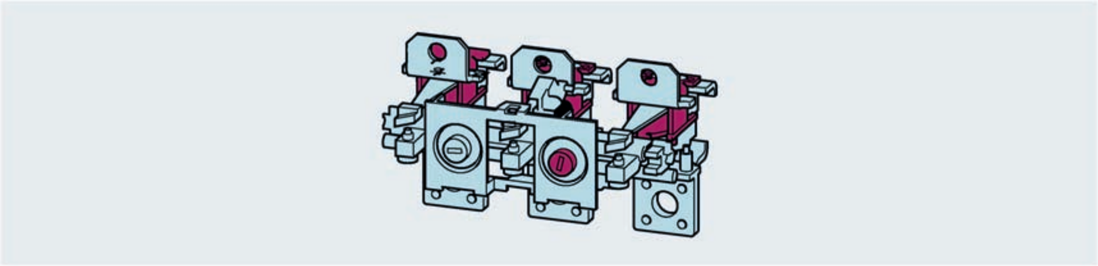

If a short-circuit current flows along the current path, the magnetic field thus generated causes the flap armature to be moved towards the yoke mounting against the opposite force of the tension spring. The tripping time is almost current-independent and instantaneous. The flap armature releases the breaker mechanism and thus opens the switching contacts. Immediately after tripping, the flap armature is moved back to its starting position by the restoring force of the tension spring.

2.7.3 Application cases and trip unit types

The table below illustrates the applications for which different types of thermal-magnetic trip units can be used:

Protection	TM210 FTFM	TM220 ATFM	TM240 ATAM
Line protection	■	■	■
Version available with			
1-pole and 2-pole breakers	■		
3-pole breaker	■	■	■
4-pole breaker	■	■	■
Available protection parameters			
I_r adjustable		■	■
I_i adjustable			■
I_r fixed	■		
I_i fixed	■	■	
I_N[1]	■	■	■

[1] For 4-pole molded case circuit breakers only, available without protection, 50% (≥ I_n 100 A) and 100%

2.8 Electronic trip unit

An electronic trip unit is based on the following concepts:

- Complete measurement of the current in the phases L1, L2 and L3, with N and currents to ground optional
- Rogowski coil
  - Very precise measurement of the current
  - Better ground-fault protection because the vectorial sum is more exact
- Evaluation of the current measurement values and constant comparison with the tripping limits
- Tripping by means of a maglatch

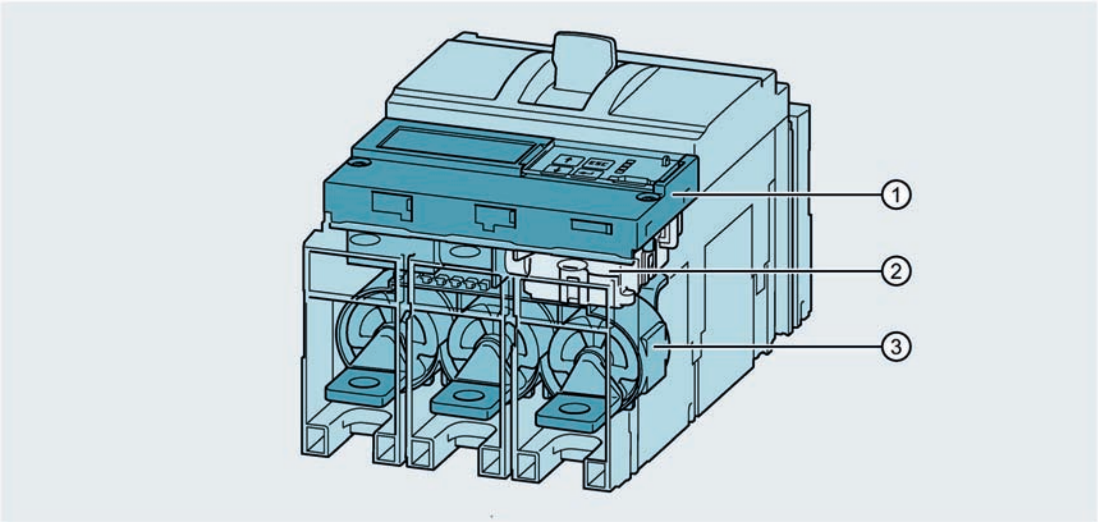

① Electronic trip unit (ETU)
② Maglatch
③ Current sensor

ETU protection against overtemperature

The ETUs are equipped with a temperature sensor for their own protection. This effectively protects the electronic components of the ETU against irreparable damage.

This protection takes effect in two stages:

- The first stage is an alarm which is indicated by LEDs directly on the ETU. This alarm is activated when the temperature reaches 90% of the maximum permissible temperature. It is automatically reset when the temperature falls below the activation limit.
  With 5-series and 8-series ETUs, this alarm can also be transmitted to a higher-level control system via the communication system.
- The second stage immediately opens the 3VA2 molded case circuit breaker when the maximum permissible temperature is exceeded in the ETU.
  The molded case circuit breaker cannot be switched back on until the temperature falls below approx. 95% of the maximum permissible temperature.

The temperature values of this temperature sensor do not allow any conclusions to be drawn about the temperature changes of other components within the circuit breaker, e.g. the circuits.

Note

The customer may perform insulation tests on the main circuits and the neutral conductor with test voltages up to 4 kV DC and surge voltages up to 14.5 kV.

2.8.1 Connections

The connections on the ETU are illustrated in the diagram below:

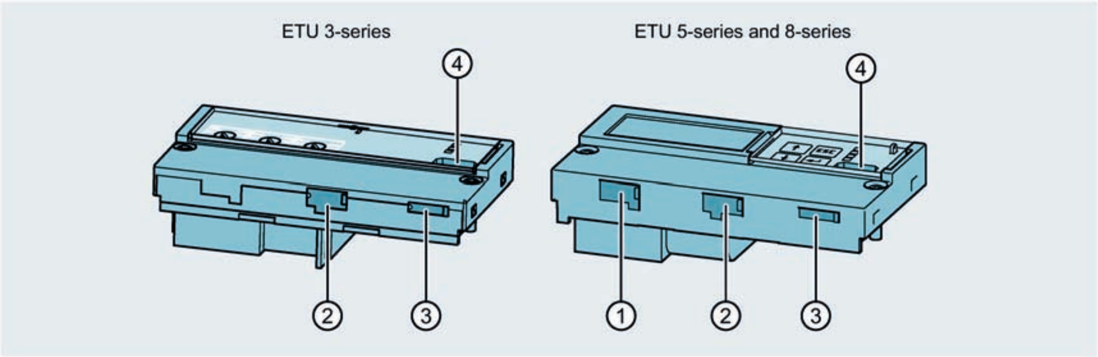

① Interface for an external current transformer for N conductor
② Interface for connection of an EFB300 external function box
③ Interface for connection of an RCD820 residual current device
④ Connection for test devices TD300 and TD500

2.8.2 Protection functions

Protection	ETU320 LI	ETU330 LIG	ETU340 ELISA	ETU350 LSI
Line protection	■	■	■	■
Generator protection	■	■	■	■
Version available with				
3-pole without external neutral conductor transformer	■	■	■	■
3-pole with external neutral conductor transformer				
4-pole with protected neutral conductor	■	■	■	■
Available protection parameters				
I_r	■	■	■	■
t_r at 6 x I_r	■	■		■
Characteristic in L range: I^2t_r	■	■	■	■
Thermal image	■	■	■	■
Thermal image can be switched on/off				
I_{sd}				■
t_{sd} at 8 x I_r				■
Characteristic in S range: I^2t_{sd}				■
Characteristic in S range: selectable I^2t_{sd} / t_{sd}				
I_i	■	■		■
I_N 1)	■	■	■	■
I_g		■		
t_g at 2 x I_g		■		
Characteristic in G range: I^2t_g				
Characteristic in G range: selectable I^2t_g / t_g				
Ground-fault alarm function				
ZSI	■	■	■	■
Features and options				
Setting by rotary switch	■	■	■	■
Setting by ETU display				
Data shown on ETU display				
Metering function				
Communication option				
Front interface	■	■	■	■

1) Available in a version with external current transformer for N conductor or 4-pole breaker

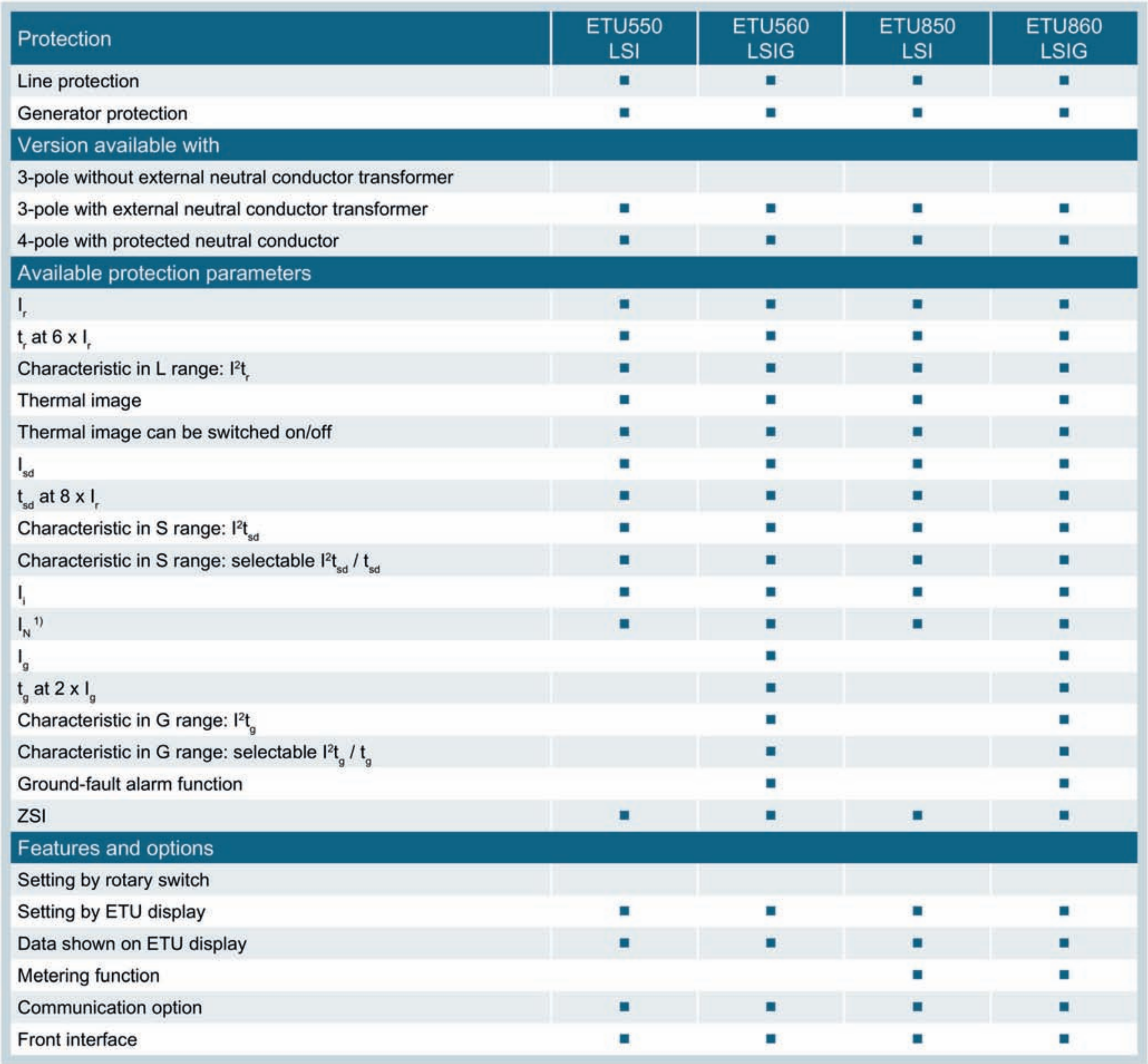

Protection	ETU550 LSI	ETU560 LSIG	ETU850 LSI	ETU860 LSIG
Line protection	■	■	■	■
Generator protection	■	■	■	■
Version available with				
3-pole without external neutral conductor transformer				
3-pole with external neutral conductor transformer	■	■	■	■
4-pole with protected neutral conductor	■	■	■	■
Available protection parameters				
I_r	■	■	■	■
t_r at 6 x I_r	■	■	■	■
Characteristic in L range: I^2t_r	■	■	■	■
Thermal image	■	■	■	■
Thermal image can be switched on/off	■	■	■	■
I_{sd}	■	■	■	■
t_{sd} at 8 x I_r	■	■	■	■
Characteristic in S range: I^2t_{sd}	■	■	■	■
Characteristic in S range: selectable I^2t_{sd} / t_{sd}	■	■	■	■
I_i	■	■	■	■
I_N 1)	■	■	■	■
I_g		■		■
t_g at 2 x I_g		■		■
Characteristic in G range: I^2t_g		■		■
Characteristic in G range: selectable I^2t_g / t_g		■		■
Ground-fault alarm function		■		■
ZSI	■	■	■	■
Features and options				
Setting by rotary switch				
Setting by ETU display	■	■	■	■
Data shown on ETU display	■	■	■	■
Metering function			■	■
Communication option	■	■	■	■
Front interface	■	■	■	■

1) Available in a version with external current transformer for N conductor or 4-pole breaker

Protection	ETU310M I	ETU350M LSI	ETU550M LSI	ETU860M LSIG
Starter protection	■			
Motor protection		■	■	■
Version available with				
3-pole without external neutral conductor transformer	■	■	■	■
Available protection parameters				
I_r		■	■	■
t_p at 7.2 x I_r			■	■
Trip class T_c		■	■	■
Protection against phase unbalance		■	■	■
Protection against phase unbalance: can be switched on/off			■	■
Unbalance ratio adjustable 5 … 50%			■	■
Thermal memory		■	■	■
I_{sd}		■	■	■
t_{sd} at 8 x I_r (fixed t_{sd} = 0.03 s)			■	■
Characteristic in S range: I^2t_{sd}		■	■	■
I_i	■	■	■	■
I_i adjustable	■		■	■
I_g				■
t_g at 2 x I_g				■
Characteristic in G range: I^2t_g				■
Characteristic in G range: selectable I^2t_g / t_g				■
Idle running protection				■
Blocking protection				■
Ground-fault alarm function				■
ZSI		■	■	■
Features and options				
Setting by rotary switch	■	■		
Setting by ETU display			■	■
Data shown on ETU display			■	■
Metering function				■
Communication option			■	■
Front interface	■	■	■	■

2.8.3 Operator controls

The following figure shows the available ETU types of the 3VA2 molded case circuit breakers. You can decide which ETU to select according to the area of application.

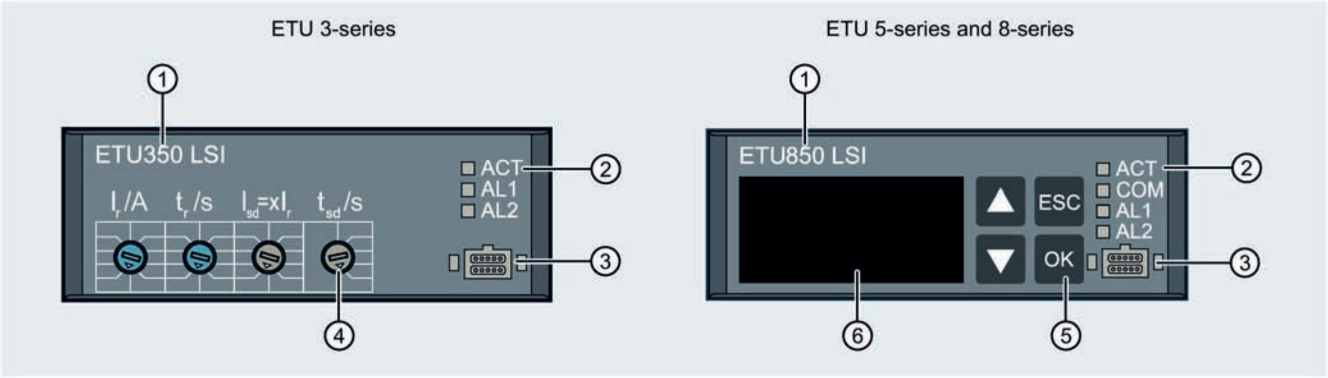

①	Name of the ETU	③	Front interface	⑤	Pushbuttons
②	LED display	④	Rotary selector switches	⑥	LCD

LED displays

The following table explains what the LED displays mean:

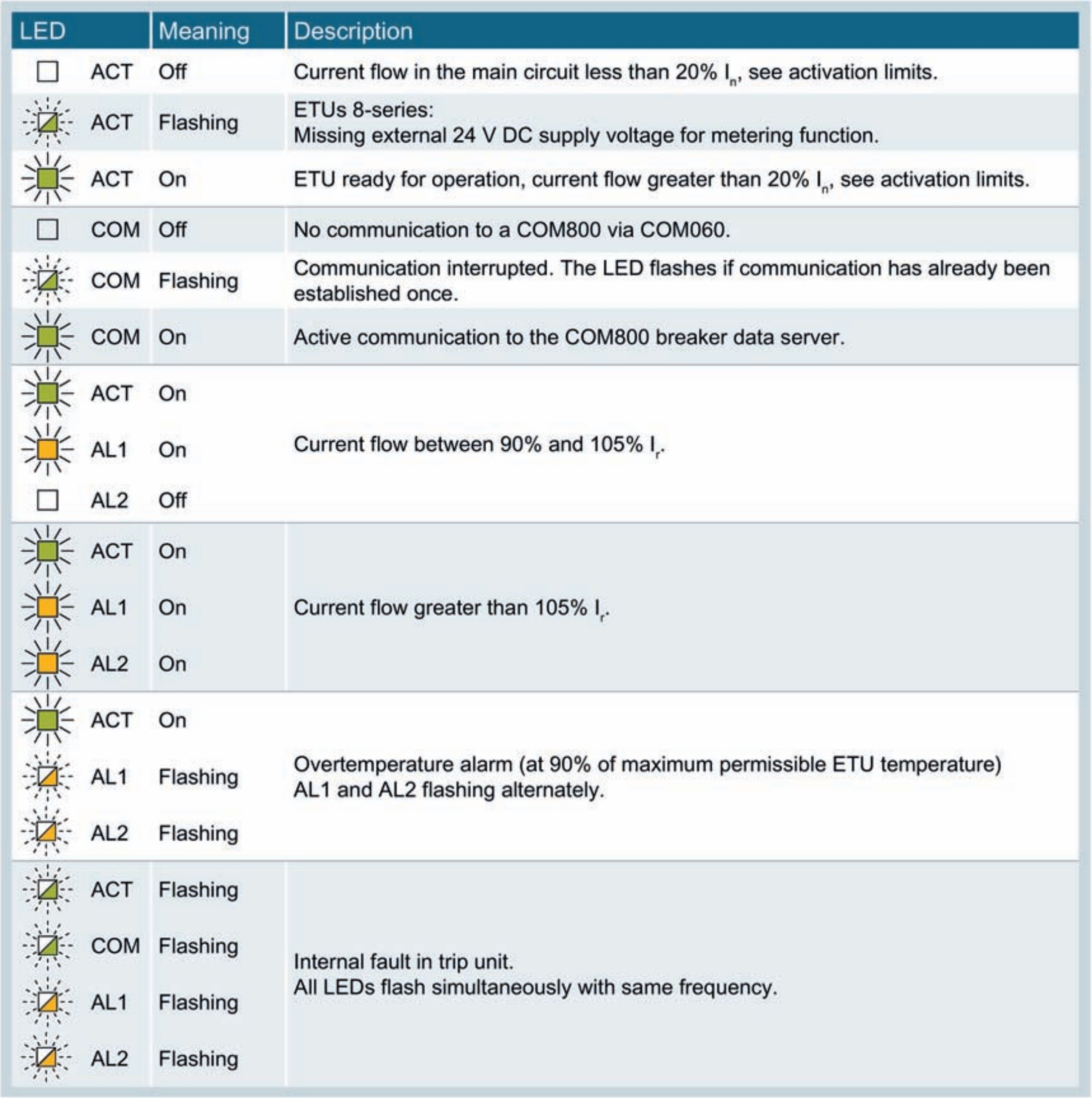

LED		Meaning	Description
☐	ACT	Off	Current flow in the main circuit less than 20% I_n, see activation limits.
◩	ACT	Flashing	ETUs 8-series: Missing external 24 V DC supply voltage for metering function.
🟩	ACT	On	ETU ready for operation, current flow greater than 20% I_n, see activation limits.
☐	COM	Off	No communication to a COM800 via COM060.
◩	COM	Flashing	Communication interrupted. The LED flashes if communication has already been established once.
🟩	COM	On	Active communication to the COM800 breaker data server.
🟩	ACT	On	Current flow between 90% and 105% I_r.
🟧	AL1	On	
☐	AL2	Off	
🟩	ACT	On	Current flow greater than 105% I_r.
🟧	AL1	On	
🟧	AL2	On	
🟩	ACT	On	Overtemperature alarm (at 90% of maximum permissible ETU temperature) AL1 and AL2 flashing alternately.
◩	AL1	Flashing	
◩	AL2	Flashing	
◩	ACT	Flashing	Internal fault in trip unit. All LEDs flash simultaneously with same frequency.
◩	COM	Flashing	
◩	AL1	Flashing	
◩	AL2	Flashing	

Activation limits for ETUs without an external supply

Rated current I_n [A]	Current in one of the three phases	Significance for ETU
25	0 … 60% I_n	The ETU is not active.
	> 60% I_n	ETU protection is active. Display (ACT LED or display) is activated.
40	0 … 40% I_n	The ETU is not active.
	> 40% I_n	ETU protection is active. Display (ACT LED or display) is activated.
63	0 … 30% I_n	The ETU is not active.
	> 30% I_n	ETU protection is active. Display (ACT LED or display) is activated.
> 63	0 … 20% I_n	The ETU is not active.
	> 20% I_n	ETU protection is active. Display (ACT LED or display) is activated.

ETUs of the 3-series

3-series electronic trip units are equipped with rotary selector switches. A description of the operating principle of the rotary selector switches and operating instructions can be found in chapter Guide to setting the tripping characteristic (Page 73).

Displays on 5-series and 8-series electronic trip units

5-series and 8-series electronic trip units are equipped with an LCD. The displayed values are refreshed once per second.

Note

The backlighting of the LCD is only active with an external voltage supply (e.g. COM060, EFB300, 24 V module).

The following table explains what the symbols in the display mean:

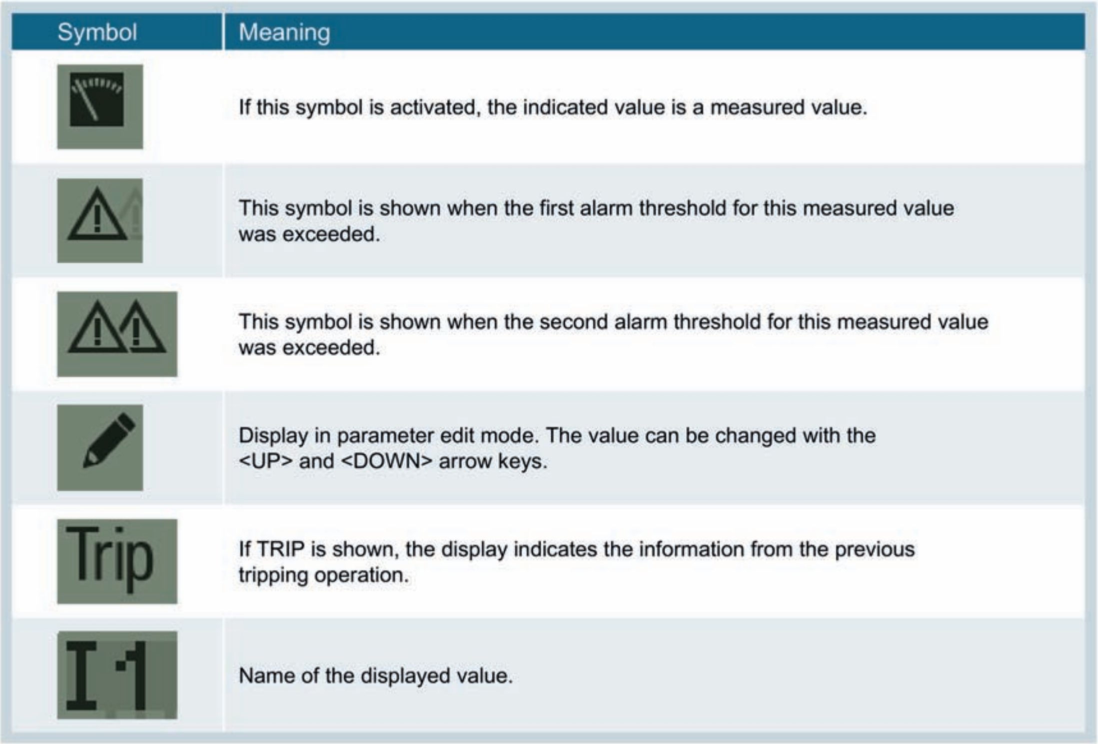

Symbol	Meaning
⏲	If this symbol is activated, the indicated value is a measured value.
⚠	This symbol is shown when the first alarm threshold for this measured value was exceeded.
⚠⚠	This symbol is shown when the second alarm threshold for this measured value was exceeded.
✎	Display in parameter edit mode. The value can be changed with the <UP> and <DOWN> arrow keys.
Trip	If TRIP is shown, the display indicates the information from the previous tripping operation.
I 1	Name of the displayed value.

The following table explains what functions are performed by the buttons next to the display:

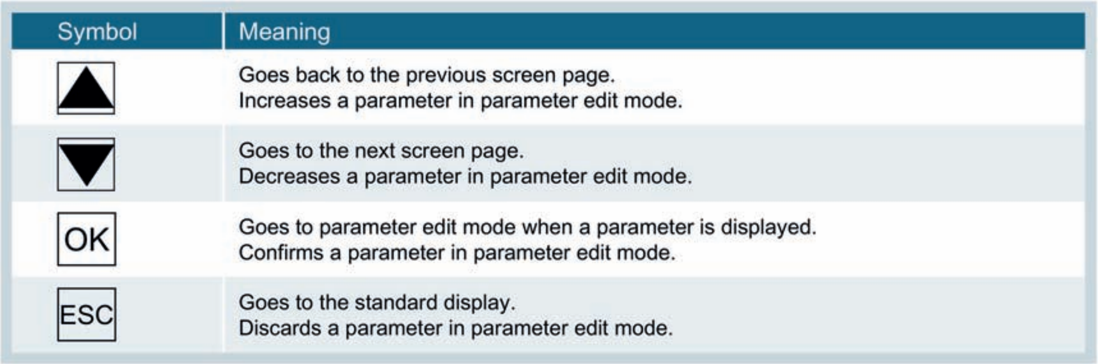

Symbol	Meaning
▲	Goes back to the previous screen page. Increases a parameter in parameter edit mode.
▼	Goes to the next screen page. Decreases a parameter in parameter edit mode.
OK	Goes to parameter edit mode when a parameter is displayed. Confirms a parameter in parameter edit mode.
ESC	Goes to the standard display. Discards a parameter in parameter edit mode.

Displays on 5-series and 8-series electronic trip units

The basic structure comprises the following displays:

- Standard display
- Alarm display
- Measured value display
- Parameter display

If no selection is made within an adjustable time period, the standard display will appear.

Standard display

Shows the highest current in one of the three phases.
After timeout or ESC

Alarm display

Up to five alarm displays are available.
They are only displayed if an alarm is active, otherwise, they are skipped.

Measured value display

Depending on the ETU type, the measured values available are displayed.

Parameter display

Displays the available parameters in succession.
Click (OK) in display mode to change to Edit mode.

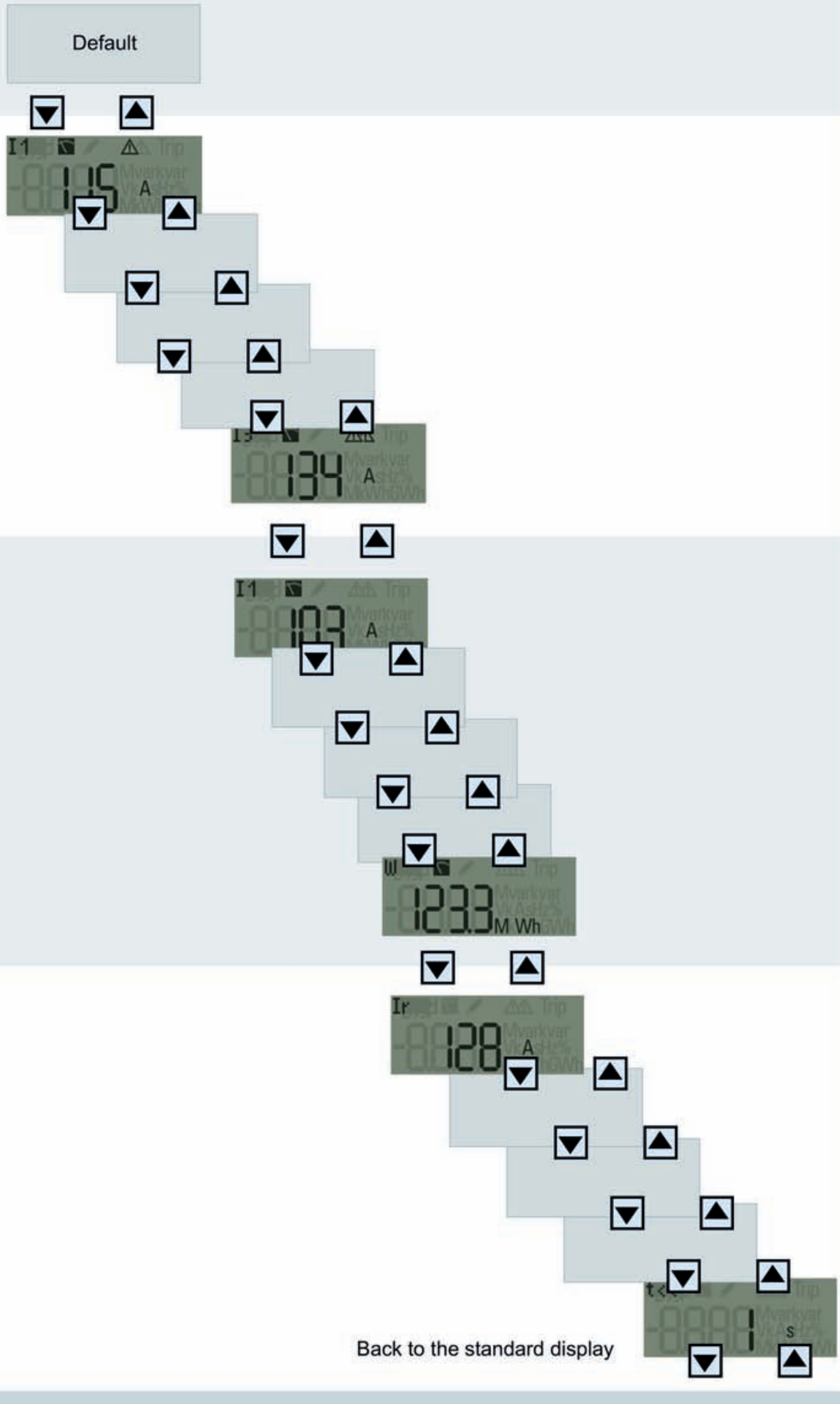

Back to the standard display

Standard display

Alarm display

Active alarms are displayed consecutively in screens AV1 … AV5. If no alarms are active, these screens are concealed.

Measured value display

The table below explains the measured value display:

Number	Screen	Measured value	Description	ETU550	ETU560	ETU850	ETU860
MV 1		I_1	Instantaneous current I_1	■	■	■	■
MV 2		I_2	Instantaneous current I_2	■	■	■	■
MV 3		I_3	Instantaneous current I_3	■	■	■	■
MV 4		I_N	Instantaneous current in neutral conductor	■	■	■	■
MV 5		I_g	Instantaneous residual current to ground		■		■
MV 6		U_{12}	Instantaneous voltage U_1–U_2			■	■
MV 7		U_{23}	Instantaneous voltage U_2–U_3			■	■
MV 8		U_{31}	Instantaneous voltage U_3–U_1			■	■
MV 9		f	Instantaneous frequency			■	■
MV 10		P	Instantaneous active power (total)			■	■
MV 11		Q	Instantaneous reactive power (total)			■	■
MV 12		PF	Instantaneous power factor			■	■
MV 13		W	Active energy			■	■

Parameter display

The table below explains the parameter display:

Number	Screen	Para-meter	Description	ETU550	ETU560	ETU850	ETU860
PV 1	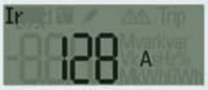	I_r	Overload protection current	■	■	■	■
PV 2		t_r	Overload protection delay time	■	■	■	■
PV 4		ThM	Thermal image	■	■	■	■
PV 5		I_{sd}	Short-time delayed short-circuit current	■	■	■	■
PV 6		t_{sd}	Short-time delayed short-circuit current delay time	■	■	■	■
PV 7		I^2t_{sd}	Characteristic curve in S range	■	■	■	■
PV 8a		ZSI S	Zone Selective Interlocking	■	■	■	■
PV 8b		ZSI G	Zone Selective Interlocking in the event of a ground fault		■		■
PV9		I_i	Instantaneous short-circuit protection current	■	■	■	■
PV 10		I_N	Overload protection in the neutral conductor	■ 1)	■ 1)	■ 1)	■ 1)
PV 11		I_g	Ground-fault protection current		■		■
PV 12		t_g	Ground-fault protection delay time		■		■
PV 13		I^2t_g	Characteristic curve for ground-fault protection		■		■
PV 14		I_{gA}	Ground fault alarm current		■		■

Setting and changing parameters

1. Use the arrow keys to navigate to the correct display.
2. Press the <OK> button.

   → Edit mode is active. Activation is confirmed by display of "pencil" symbol.

3. Use the arrow keys to adjust the parameter setting.
4. Confirm the setting with the <OK> button, or cancel the operation with <ESC>.

   → The setting is accepted with <OK>. The parameter display now appears.

"Tripped" display

After the ETU has initiated a trip, the "Tripped" display automatically appears:

This screen can be identified by the word "Trip" which is displayed in the top, right-hand corner. The displayed current value shows the current at the moment of tripping.

Press <ESC> to exit the display.

The additional information contained in the "Tripped" display is explained in the table below:

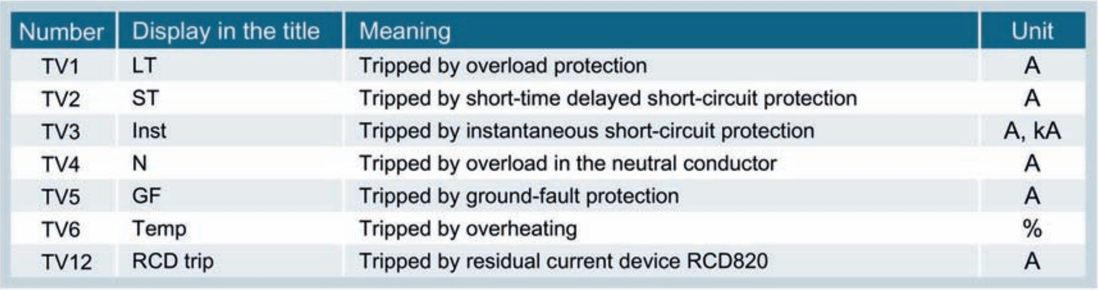

Number	Display in the title	Meaning	Unit
TV1	LT	Tripped by overload protection	A
TV2	ST	Tripped by short-time delayed short-circuit protection	A
TV3	Inst	Tripped by instantaneous short-circuit protection	A, kA
TV4	N	Tripped by overload in the neutral conductor	A
TV5	GF	Tripped by ground-fault protection	A
TV6	Temp	Tripped by overheating	%
TV12	RCD trip	Tripped by residual current device RCD820	A

Diagnostics display

When a TD500 test device is connected, you can use it to initiate a test. The following screen appears when a TD500 is connected. The bar flashes at a frequency of 0.5 Hz.

The bar travels from left to right while testing is in progress. The test ends with a trip.

2.8.4 Load acceptance and load shedding - load management

3VA molded case circuit breakers equipped with an ETU 3-series or higher series provide two current thresholds for the purpose of implementing a local load management function. Load shedding is the upper threshold, and load acceptance the lower threshold.

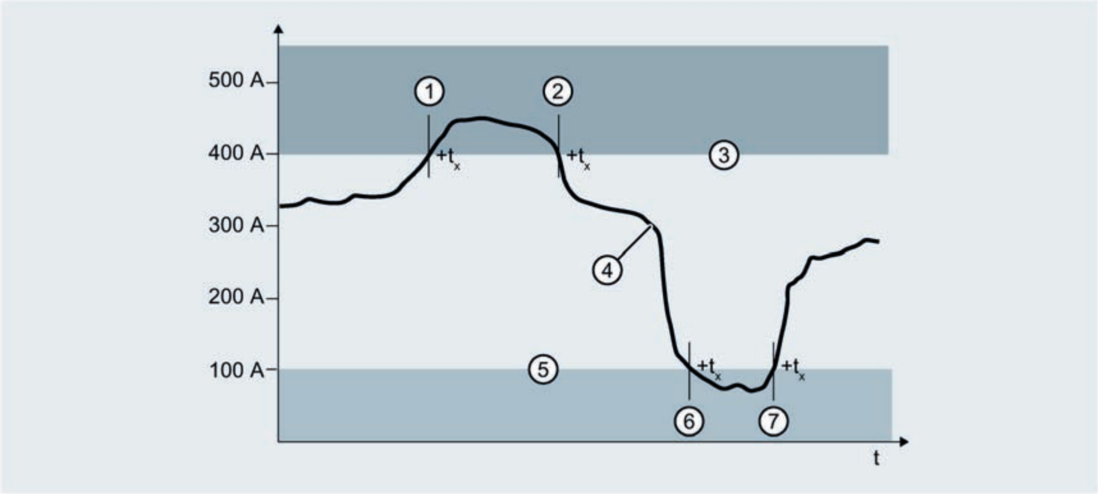

① Incoming alarm "load shedding"
② Outgoing alarm "load shedding"
③ Parameter load shedding 400 A
④ Current in one phase
⑤ Parameter load acceptance 100 A
⑥ Incoming alarm "load acceptance"
⑦ Outgoing alarm "load acceptance"

Note

No trip

Tripping is never initiated as a result of the current value crossing the upper or lower thresholds.

If the current in one phase exceeds the parameter setting for "load shedding" for longer than delay time t_x, an incoming alarm "load shedding" is generated. Only when the current in all three phases drops below this threshold is an outgoing alarm "load shedding" generated.

The incoming and outgoing alarms can be output via an optional EFB module and transferred via the communication link.

The opposite applies for the load acceptance threshold. If the current in all three phases drops below the parameter setting, an incoming alarm "load acceptance" is generated. If only one of the three currents exceeds the parameter setting, an outgoing alarm "load acceptance" is generated.

To prevent these alarms being generated by brief current peaks and troughs, they can be delayed by the time t_x from 1 s to 15 s.

powerconfig is used for parameterization.

2.8.5 Measuring with a Rogowski coil

The Rogowski coil is a toroidal coil without a ferromagnetic core. It is used as a component in electronic measuring devices to measure alternating current.

Advantages of the current sensor:

- Each transformer can be optimized for its task and operating points
  - Transformers for power generation
  - Transformers for measurement
- Higher accuracy of current measurement and therefore higher accuracy for ground-fault currents

A power measurement is made possible by the more exact and more linear measurement of the current together with the integrated voltage tap in the molded case circuit breaker.

Accuracy levels of the specified measured values of the 8-series ETU, including the integrated current sensors

Measured value	Additional condition	Accuracy in % of the read-off measured value
Current	0.08 I_b … 2 I_b	± 1%
Voltage (L - N)	80 V < U < 480 V	± 1%
THD current	up to the 19th harmonic 0.08 I_b … 2 I_b	± 5%
THD voltage	up to the 19th harmonic 80 V < U < 480 V	± 5%
Power factor PF	0.08 I_b … 2 I_b	± 0.05 absolute
Active power	I_b and U_n as described below the table	Class 2 acc. to IEC 61557-12
Active energy	I_b and U_n as described below the table	Class 2 acc. to IEC 61557-12
Reactive power Apparent power	0.08 I_b … 2 I_b PF ≥ 0.6 inductive PF ≥ 0.8 capacitive	± 2%
Reactive energy Reactive power	0.08 I_b … 2 I_b PF ≥ 0.6 inductive PF ≥ 0.8 capacitive	± 2%
Frequency	80 V < U < 480 V	± 0.1%

I_b is the maximum current in the relevant size. Example: 3VA21 → I_b = 160 A

U_n refers to the nominal voltage of the metering function, between phase and neutral

All specified accuracies refer to an ambient temperature of 23 °C ± 2 °C

Interpretation of measured values

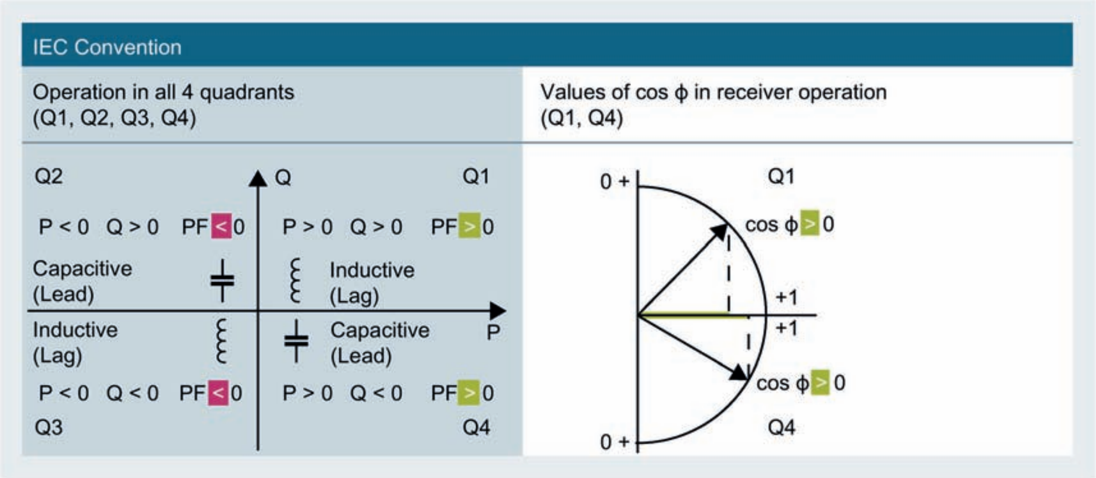

PF Power factor

Measured current and voltage values are always positive.

The "normal" direction of energy flow of the 3VA molded case circuit breaker is top down (can also be adjusted using the powerconfig software), corresponding to operation in quadrants Q1 and Q4. If the molded case circuit breaker is supplied from below, it operates in quadrants Q2 and Q3.

The following table provides an overview of the setting values:

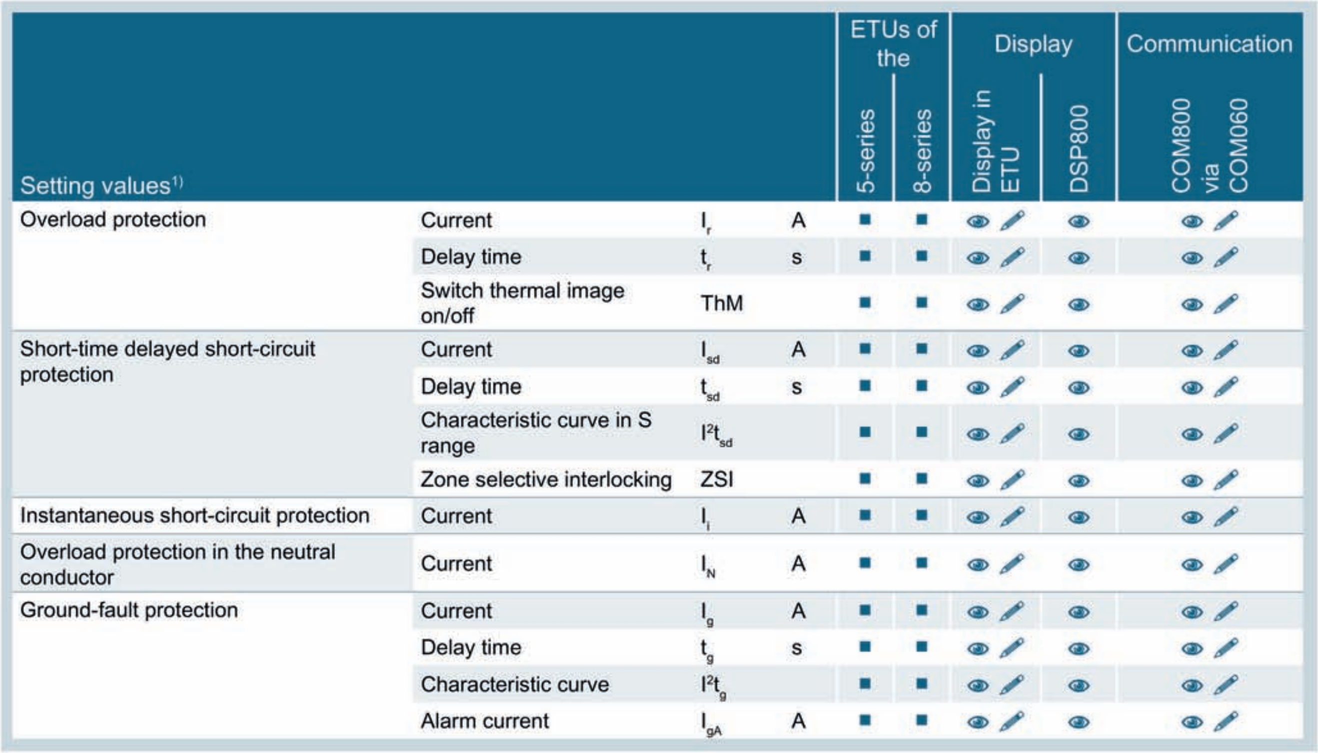

Setting values[1]				ETUs of the		Display		Communication
				5-series	8-series	Display in ETU	DSP800	COM800 via COM060
Overload protection	Current	I_r	A	■	■	👁 ✎	👁	👁 ✎
	Delay time	t_r	s	■	■	👁 ✎	👁	👁 ✎
	Switch thermal image on/off	ThM		■	■	👁 ✎	👁	👁 ✎
Short-time delayed short-circuit protection	Current	I_{sd}	A	■	■	👁 ✎	👁	👁 ✎
	Delay time	t_{sd}	s	■	■	👁 ✎	👁	👁 ✎
	Characteristic curve in S range	I^2t_{sd}		■	■	👁 ✎	👁	👁 ✎
	Zone selective interlocking	ZSI		■	■	👁 ✎	👁	👁 ✎
Instantaneous short-circuit protection	Current	I_i	A	■	■	👁 ✎	👁	👁 ✎
Overload protection in the neutral conductor	Current	I_N	A	■	■	👁 ✎	👁	👁 ✎
Ground-fault protection	Current	I_g	A	■	■	👁 ✎	👁	👁 ✎
	Delay time	t_g	s	■	■	👁 ✎	👁	👁 ✎
	Characteristic curve	I^2t_g		■	■	👁 ✎	👁	👁 ✎
	Alarm current	I_{gA}	A	■	■	👁 ✎	👁	👁 ✎

1) Depending on ETU version

👁 Value can be read

✎ Value can be edited

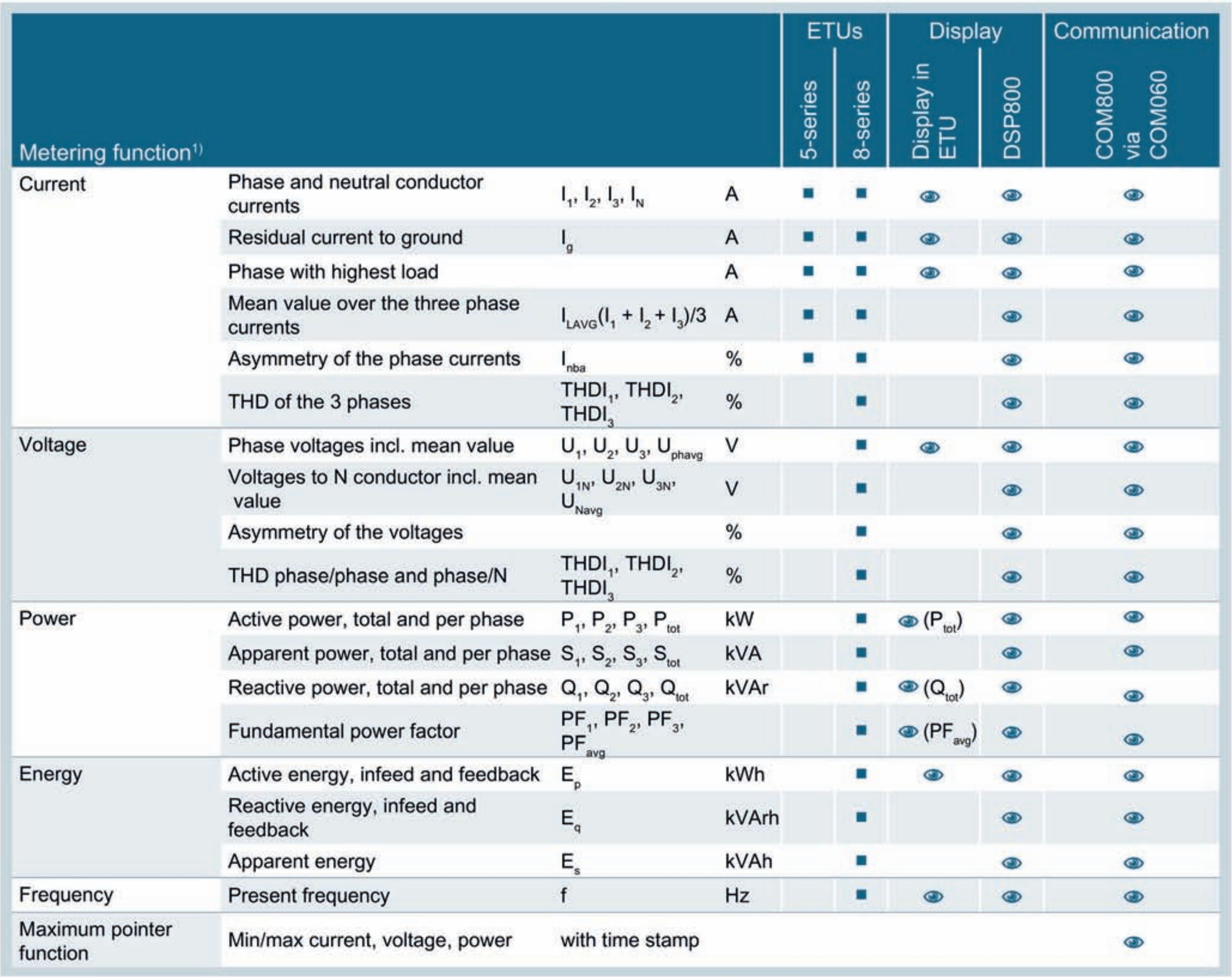

Metering function[1]				ETUs		Display		Communication
				5-series	8-series	Display in ETU	DSP800	COM800 via COM060
Current	Phase and neutral conductor currents	I_1, I_2, I_3, I_N	A	■	■	👁	👁	👁
	Residual current to ground	I_g	A	■	■	👁	👁	👁
	Phase with highest load		A	■	■	👁	👁	👁
	Mean value over the three phase currents	$I_{LAVG}(I_1 + I_2 + I_3)/3$	A	■	■		👁	👁
	Asymmetry of the phase currents	I_{nba}	%	■	■		👁	👁
	THD of the 3 phases	$THDI_1, THDI_2, THDI_3$	%		■		👁	👁
Voltage	Phase voltages incl. mean value	U_1, U_2, U_3, U_{phavg}	V		■	👁	👁	👁
	Voltages to N conductor incl. mean value	$U_{1N}, U_{2N}, U_{3N}, U_{Navg}$	V		■		👁	👁
	Asymmetry of the voltages		%		■		👁	👁
	THD phase/phase and phase/N	$THDI_1, THDI_2, THDI_3$	%		■		👁	👁
Power	Active power, total and per phase	P_1, P_2, P_3, P_{tot}	kW		■	👁 (P_{tot})	👁	👁
	Apparent power, total and per phase	S_1, S_2, S_3, S_{tot}	kVA		■		👁	👁
	Reactive power, total and per phase	Q_1, Q_2, Q_3, Q_{tot}	kVAr		■	👁 (Q_{tot})	👁	👁
	Fundamental power factor	$PF_1, PF_2, PF_3, PF_{avg}$			■	👁 (PF_{avg})	👁	👁
Energy	Active energy, infeed and feedback	E_p	kWh		■	👁	👁	👁
	Reactive energy, infeed and feedback	E_q	kVArh		■		👁	👁
	Apparent energy	E_s	kVAh		■		👁	👁
Frequency	Present frequency	f	Hz		■	👁	👁	👁
Maximum pointer function	Min/max current, voltage, power	with time stamp						👁

[1] Depending on ETU version

👁 Value can be displayed/read

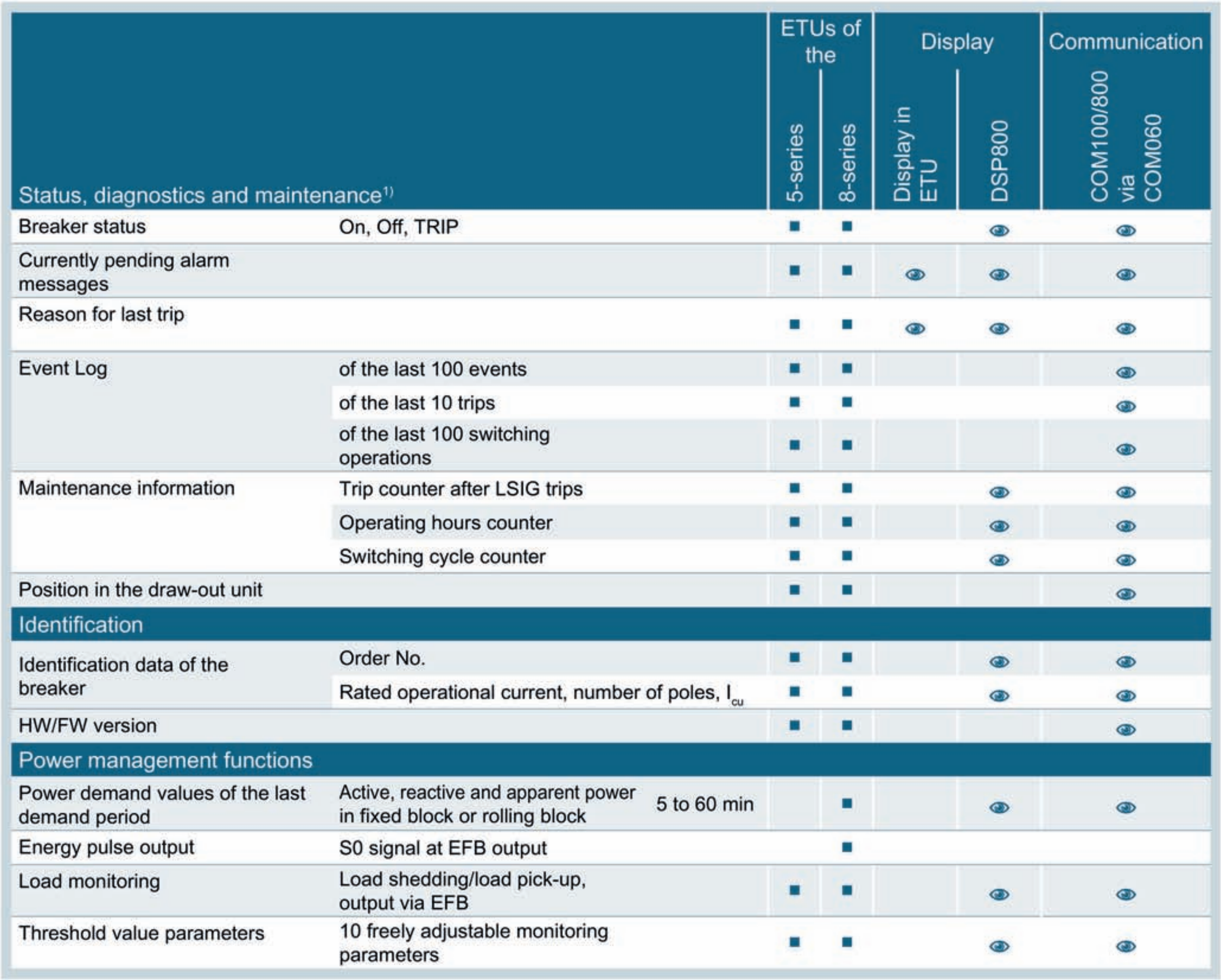

Status, diagnostics and maintenance[1]			ETUs of the		Display		Communication
			5-series	8-series	Display in ETU	DSP800	COM100/800 via COM060
Breaker status	On, Off, TRIP		■	■		👁	👁
Currently pending alarm messages			■	■	👁	👁	👁
Reason for last trip			■	■	👁	👁	👁
Event Log	of the last 100 events		■	■			👁
	of the last 10 trips		■	■			👁
	of the last 100 switching operations		■	■			👁
Maintenance information	Trip counter after LSIG trips		■	■		👁	👁
	Operating hours counter		■	■		👁	👁
	Switching cycle counter		■	■		👁	👁
Position in the draw-out unit			■	■			👁
Identification							
Identification data of the breaker	Order No.		■	■		👁	👁
	Rated operational current, number of poles, I_{cu}		■	■		👁	👁
HW/FW version			■	■			👁
Power management functions							
Power demand values of the last demand period	Active, reactive and apparent power in fixed block or rolling block	5 to 60 min		■		👁	👁
Energy pulse output	S0 signal at EFB output			■			
Load monitoring	Load shedding/load pick-up, output via EFB		■	■		👁	👁
Threshold value parameters	10 freely adjustable monitoring parameters		■	■		👁	👁

[1] Depending on ETU version

👁 Value can be displayed/read

Applications

3

3.1 3VA IEC trip units

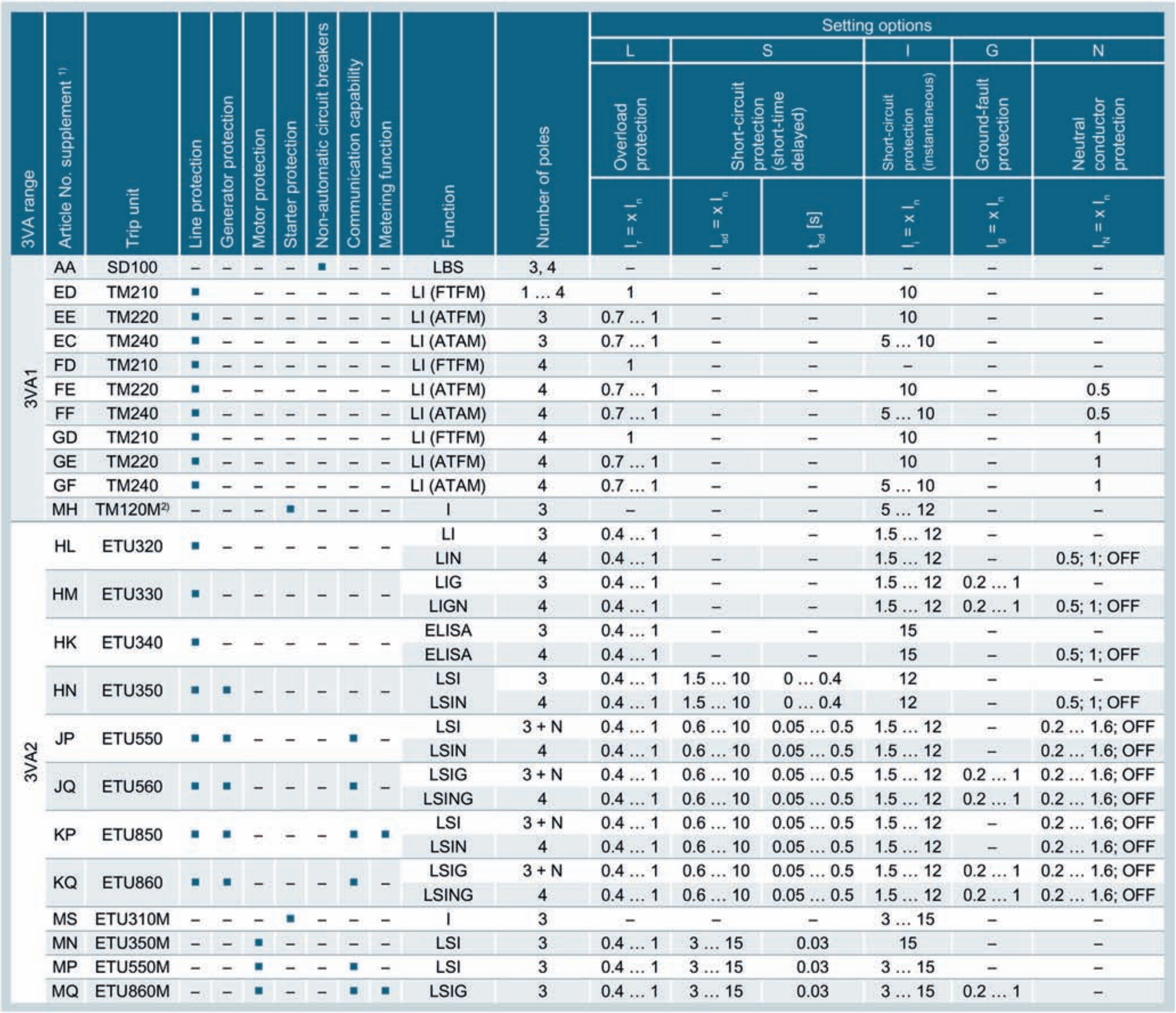

3VA range	Article No. supplement [1]	Trip unit	Line protection	Generator protection	Motor protection	Starter protection	Non-automatic circuit breakers	Communication capability	Metering function	Function	Number of poles	Setting options					
												L	S		I	G	N
												Overload protection	Short-circuit protection (short-time delayed)		Short-circuit protection (instantaneous)	Ground-fault protection	Neutral conductor protection
												$I_r = x\ I_n$	$I_{sd} = x\ I_n$	t_{sd} [s]	$I_i = x\ I_n$	$I_g = x\ I_n$	$I_N = x\ I_n$
3VA1	AA	SD100	–	–	–	–	■	–	–	LBS	3, 4	–	–	–	–	–	–
	ED	TM210	■		–	–	–	–	–	LI (FTFM)	1 … 4	1	–	–	10	–	–
	EE	TM220	■	–	–	–	–	–	–	LI (ATFM)	3	0.7 … 1	–	–	10	–	–
	EC	TM240	■	–	–	–	–	–	–	LI (ATAM)	3	0.7 … 1	–	–	5 … 10	–	–
	FD	TM210	■	–	–	–	–	–	–	LI (FTFM)	4	1	–	–	–	–	–
	FE	TM220	■	–	–	–	–	–	–	LI (ATFM)	4	0.7 … 1	–	–	10	–	0.5
	FF	TM240	■	–	–	–	–	–	–	LI (ATAM)	4	0.7 … 1	–	–	5 … 10	–	0.5
	GD	TM210	■	–	–	–	–	–	–	LI (FTFM)	4	1	–	–	10	–	1
	GE	TM220	■	–	–	–	–	–	–	LI (ATFM)	4	0.7 … 1	–	–	10	–	1
	GF	TM240	■	–	–	–	–	–	–	LI (ATAM)	4	0.7 … 1	–	–	5 … 10	–	1
	MH	TM120M[2]	–	–	–	■	–	–	–	I	3	–	–	–	5 … 12	–	–
3VA2	HL	ETU320	■	–	–	–	–	–	–	LI	3	0.4 … 1	–	–	1.5 … 12	–	–
										LIN	4	0.4 … 1	–	–	1.5 … 12	–	0.5; 1; OFF
	HM	ETU330	■	–	–	–	–	–	–	LIG	3	0.4 … 1	–	–	1.5 … 12	0.2 … 1	–
										LIGN	4	0.4 … 1	–	–	1.5 … 12	0.2 … 1	0.5; 1; OFF
	HK	ETU340	■	–	–	–	–	–	–	ELISA	3	0.4 … 1	–	–	15	–	–
										ELISA	4	0.4 … 1	–	–	15	–	0.5; 1; OFF
	HN	ETU350	■	■	–	–	–	–	–	LSI	3	0.4 … 1	1.5 … 10	0 … 0.4	12	–	–
										LSIN	4	0.4 … 1	1.5 … 10	0 … 0.4	12	–	0.5; 1; OFF
	JP	ETU550	■	■	–	–	–	■	–	LSI	3 + N	0.4 … 1	0.6 … 10	0.05 … 0.5	1.5 … 12	–	0.2 … 1.6; OFF
										LSIN	4	0.4 … 1	0.6 … 10	0.05 … 0.5	1.5 … 12	–	0.2 … 1.6; OFF
	JQ	ETU560	■	■	–	–	–	■	–	LSIG	3 + N	0.4 … 1	0.6 … 10	0.05 … 0.5	1.5 … 12	0.2 … 1	0.2 … 1.6; OFF
										LSING	4	0.4 … 1	0.6 … 10	0.05 … 0.5	1.5 … 12	0.2 … 1	0.2 … 1.6; OFF
	KP	ETU850	■	■	–	–	–	■	■	LSI	3 + N	0.4 … 1	0.6 … 10	0.05 … 0.5	1.5 … 12	–	0.2 … 1.6; OFF
										LSIN	4	0.4 … 1	0.6 … 10	0.05 … 0.5	1.5 … 12	–	0.2 … 1.6; OFF
	KQ	ETU860	■	■	–	–	–	■	–	LSIG	3 + N	0.4 … 1	0.6 … 10	0.05 … 0.5	1.5 … 12	0.2 … 1	0.2 … 1.6; OFF
										LSING	4	0.4 … 1	0.6 … 10	0.05 … 0.5	1.5 … 12	0.2 … 1	0.2 … 1.6; OFF
	MS	ETU310M	–	–	–	■	–	–	–	I	3	–	–	–	3 … 15	–	–
	MN	ETU350M	–	–	■	–	–	–	–	LSI	3	0.4 … 1	3 … 15	0.03	15	–	–
	MP	ETU550M	–	–	■	–	–	■	–	LSI	3	0.4 … 1	3 … 15	0.03	3 … 15	–	–
	MQ	ETU860M	–	–	■	–	–	■	■	LSIG	3	0.4 … 1	3 … 15	0.03	3 … 15	0.2 … 1	–

[1] In positions 9 and 10 of the Article No.

[2] After a short circuit, tripping occurs at 140% of the set instantaneous short-circuit current with a 1-pole load.

FTFM	T (thermal trip unit) and M (magnetic trip unit) fixed
ATFM	T (thermal trip unit) adjustable, M (magnetic trip unit) fixed
ATAM	T (thermal trip unit) and M (magnetic trip unit) adjustable

3.2 Line protection applications of 3VA molded case circuit breakers

The main applications of the circuit breakers as line protection components are:

- In main switchboards to provide protection for cables to subdistribution boards
- In subdistribution boards to provide protection for cables to small distribution boards
- Protection for mixed loads (e.g. machinery, lighting, heating)

The trip units for line protection are designed to provide overload and short-circuit protection for:

- Cables
- Conductors
- Non-motor loads

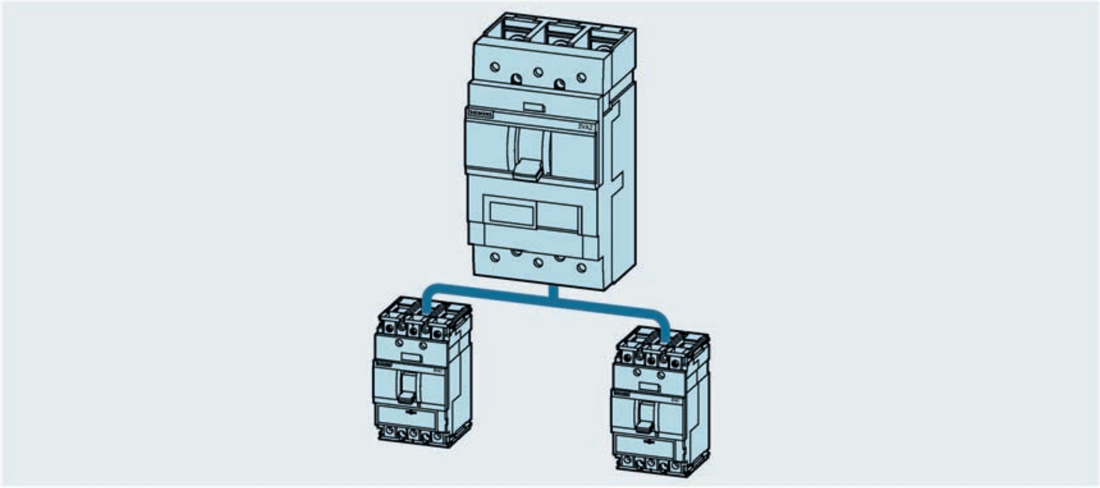

Suitable 3VA molded case circuit breakers and trip units

3VA molded case circuit breakers equipped with the following trip units are suitable for use in line protection:

- 3VA1 breakers with thermal-magnetic trip units
  - TMs 2-series (Page 111)
- 3VA2 breakers with electronic trip units
  - ETUs 3-series (Page 115)
  - ETUs 5-series (Page 131)
  - ETUs 8-series (Page 131)

3.2.1 Variants

3.2.1.1 Thermal-magnetic trip units

Derating

Thermal-magnetic trip units employ a temperature-dependent bimetal to provide overload protection. The setting values are calibrated at an ambient temperature of +50 °C. Compensation factors must be applied for ambient temperatures other than +50 °C.

You will find more information and derating factors in chapter Derating and temperature compensation (Page 628).

Thermal-magnetic trip unit TM210 LI

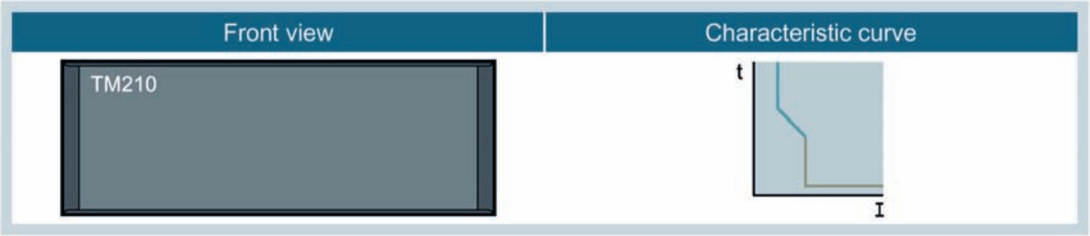

Line protection FTFM - function LI

The thermal-magnetic trip unit TM210 has:

- fixed parameter setting I_r for overload protection (L)
- fixed parameter setting I_i for instantaneous short-circuit protection (I)
- With 4-pole versions only: Neutral conductor (N) protection permanently set to 0%, 50% or 100% I_r depending on version

Parameter TM210:

Size		I_n [A]	I_r [A]	I_i [A]	I_N [%] [1]
3VA1	100 A	16	16	320	0
		20	20		
		25	25		
		32	32		
		40	40	400	
		50	50	500	
		63	63	630	
		80	80	800	
		100	100	1000	
	160 A	16	16	320	0 / 100
		20	20		
		25	25		
		32	32		
		40	40	400	
		50	50	500	
		63	63	630	
		80	80	800	
		100	100	1000	0 / 50 / 100
		125	125	1250	
		160	160	1600	

[1] With 4-pole versions only:

Thermal-magnetic trip unit TM220 LI

Front view	Characteristic curve
	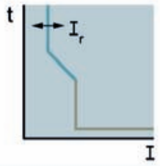

Line protection ATFM - function LI

The thermal-magnetic trip unit TM220 has:

- adjustable parameter setting I_r for overload protection (L)
- fixed parameter setting I_i for instantaneous short-circuit protection (I)
- With 4-pole versions only: Neutral conductor (N) protection permanently set to 0%, 50% or 100% I_r depending on version

Parameter TM220:

Size		I_n [A]	I_r [A]	I_i [A]	I_N [%] [1]
3VA1	160 A	16	11 / 13 / 14 / 16	320	0 / 100
		20	14 / 16 / 18 / 20		
		25	18 / 20 / 23 / 25		
		32	22 / 26 / 29 / 32		
		40	28 / 32 / 36 / 40	400	
		50	35 / 40 / 45 / 50	500	
		63	44 / 50 / 57 / 63	630	
		80	56 / 64 / 72 / 80	800	
		100	70 / 80 / 90 / 100	1000	0 / 50 / 100
		125	88 / 100 / 113 / 125	1250	
		160	112 / 128 / 144 / 160	1600	

[1] With 4-pole versions only:

Thermal-magnetic trip unit TM240 LI

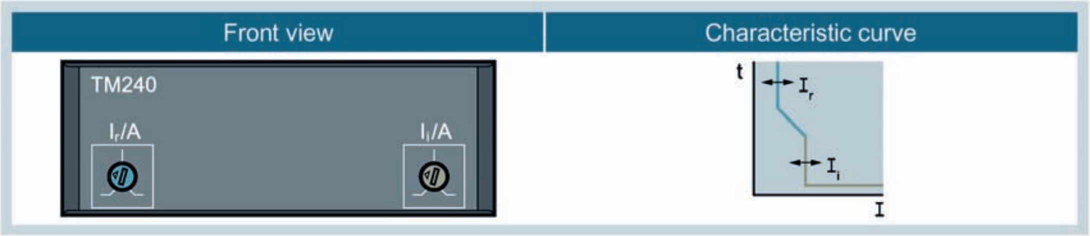

Line protection ATAM - function LI

The thermal-magnetic trip unit TM240 has:

- adjustable parameter setting I_r for overload protection (L)
- adjustable parameter setting I_i for instantaneous short-circuit protection (I)
- With 4-pole versions only: Neutral conductor (N) protection permanently set to 0%, 50% or 100% I_r depending on version

Parameter TM240:

Size		I_n [A]	I_r [A]	I_i [A]	I_N [%] [1]
3VA1	160 A	16 A	11 / 13 / 14 / 16	160 / 192 / 224 / 256 / 288 / 320	0 / 100
		20 A	14 / 16 / 18 / 20		
		25 A	18 / 20 / 23 / 25		
		32 A	22 / 26 / 29 / 32		
		40 A	28 / 32 / 36 / 40	200 / 240 / 280 / 320 / 360 / 400	
		50 A	35 / 40 / 45 / 50	250 / 300 / 350 / 400 / 450 / 500	
		63 A	44 / 50 / 57 / 63	315 / 378 / 441 / 504 / 567 / 630	
		80 A	56 / 64 / 72 / 80	400 / 480 / 560 / 640 / 720 / 800	
		100 A	70 / 80 / 90 / 100	500 / 600 / 700 / 800 / 900 / 1000	0 / 50 / 100
		125 A	88 / 100 / 113 / 125	625 / 750 / 875 / 1000 / 1125 / 1250	
		160 A	112 / 128 / 144 / 160	800 / 960 / 1120 / 1280 / 1440 / 1600	
	250 A	160 A	112 / 128 / 144 / 160	800 / 960 / 1120 / 1280 / 1340 / 1600	0 / 50 / 100
		200 A	140 / 160 / 180 / 200	1000 / 1200 / 1400 / 1600 / 1800 / 2000	
		250 A	175 / 200 / 225 / 250	1250 / 1500 / 1750 / 2000 / 2250 / 2500	
	400 A	320 A	220 / 260 / 290 / 320	1600 / 1920 / 2240 / 2560 / 2880 / 3200	0 / 50 / 100
		400 A	280 / 320 / 360 / 400	2000 / 2400 / 2800 / 3200 / 3600 / 4000	
	630 A	500 A	350 / 400 / 450 / 500	2500 / 3000 / 3500 / 4000 / 4500 / 5000	0 / 50 / 100
		630 A	440 / 500 / 570 / 630	2520 / 3150 / 3780 / 4410 / 5000 / –	

---

1) With 4-pole versions only:

3.2.1.2 Electronic trip units

ETUs for line protection applications

The following electronic trip units are suitable for use in line protection applications:

- ETU320 LI
- ETU330 LIG
- ETU340 ELISA; LI
- ETU350 LSI
- ETU550 LSI
- ETU560 LSIG
- ETU850 LSI
- ETU860 LSIG

Electronic trip unit ETU320 LI

ETU320 LI 3-pole:

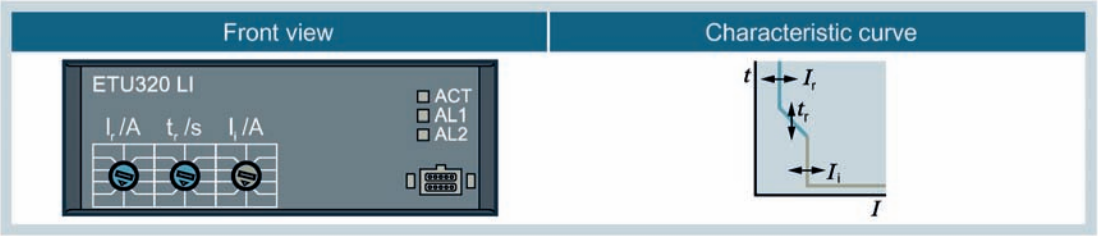

ETU320 LI 4-pole:

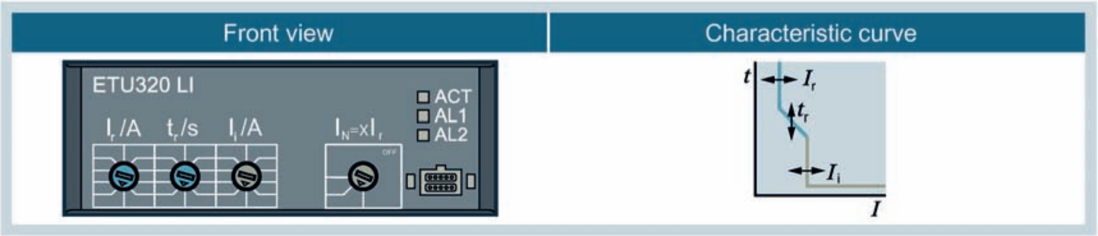

Line protection - function LI

The ETU320 electronic trip unit has:

- Adjustable parameter settings I_r and t_r for overload protection (L)
- Adjustable parameter setting I_i for instantaneous short-circuit protection (I)
- With 4-pole versions only: Neutral conductor protection (N) which can be deactivated
- Permanently active thermal memory, cannot be deactivated

ETU320 parameters:

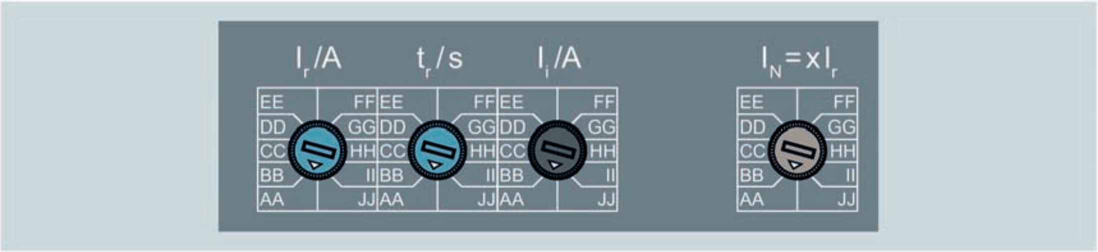

Overload protection L:

Size			I_n [A]	Settings I_r [A]									
				AA	BB	CC	DD	EE	FF	GG	HH	II	JJ
3VA2	M / H / C / L	100 A	25	10	12	14	16	18	20	22	23	24	25
			40	16	20	24	28	30	32	34	36	38	40
			63	25	30	35	40	45	50	54	57	60	63
			100	40	50	63	70	75	80	85	90	95	100
		160 A	25	10	12	14	16	18	20	22	23	24	25
			40	16	20	24	28	30	32	34	36	38	40
			63	25	30	35	40	45	50	54	57	60	63
			100	40	50	63	70	75	80	85	90	95	100
			160	63	80	95	110	125	140	145	150	155	160
		250 A	160	63	80	95	110	125	140	145	150	155	160
			250	100	125	150	175	200	210	220	230	240	250
	M / H / C	400 A	250	100	125	150	175	200	210	220	230	240	250
			400	160	200	240	280	300	320	340	360	380	400
		630 A	400	160	200	240	280	300	320	340	360	380	400
			630	250	315	400	450	500	525	550	575	600	630
		1000 A	630	250	315	400	450	500	525	550	575	600	630
			800	320	400	500	550	600	630	680	720	760	800
			1000	400	500	630	700	750	800	850	900	950	1000

Size			I_n [A]	Settings t_r [s]									
				AA	BB	CC	DD	EE	FF	GG	HH	II	JJ
3VA2	M / H / C / L	100 A	25	0.5	0.75	1	2	3	5	8	10	14	17
			40	0.5	0.75	1	2	3	5	8	10	14	17
			63	0.5	0.75	1	2	3	5	8	10	14	17
			100	0.5	0.75	1	2	3	5	8	10	14	17
		160 A	25	0.5	0.75	1	2	3	5	8	10	14	17
			40	0.5	0.75	1	2	3	5	8	10	14	17
			63	0.5	0.75	1	2	3	5	8	10	14	17
			100	0.5	0.75	1	2	3	5	8	10	14	17
			160	0.5	0.75	1	2	3	5	8	10	14	17
		250 A	160	0.5	0.75	1	2	3	5	8	10	14	17
			250	0.5	0.75	1	2	3	5	8	10	14	15
	M / H / C	400 A	250	0.5	0.75	1	2	3	5	8	10	14	17
			400	0.5	0.75	1	2	3	5	8	10	14	17
		630 A	400	0.5	0.75	1	2	3	5	8	10	14	17
			630	0.5	0.75	1	2	3	5	8	10	11	12
		1000 A	630	0.5	0.75	1	2	3	5	8	10	14	17
			800	0.5	0.75	1	2	3	5	8	10	14	17
			1000	0.5	0.75	1	2	3	5	8	10	14	17

Instantaneous short-circuit protection I:

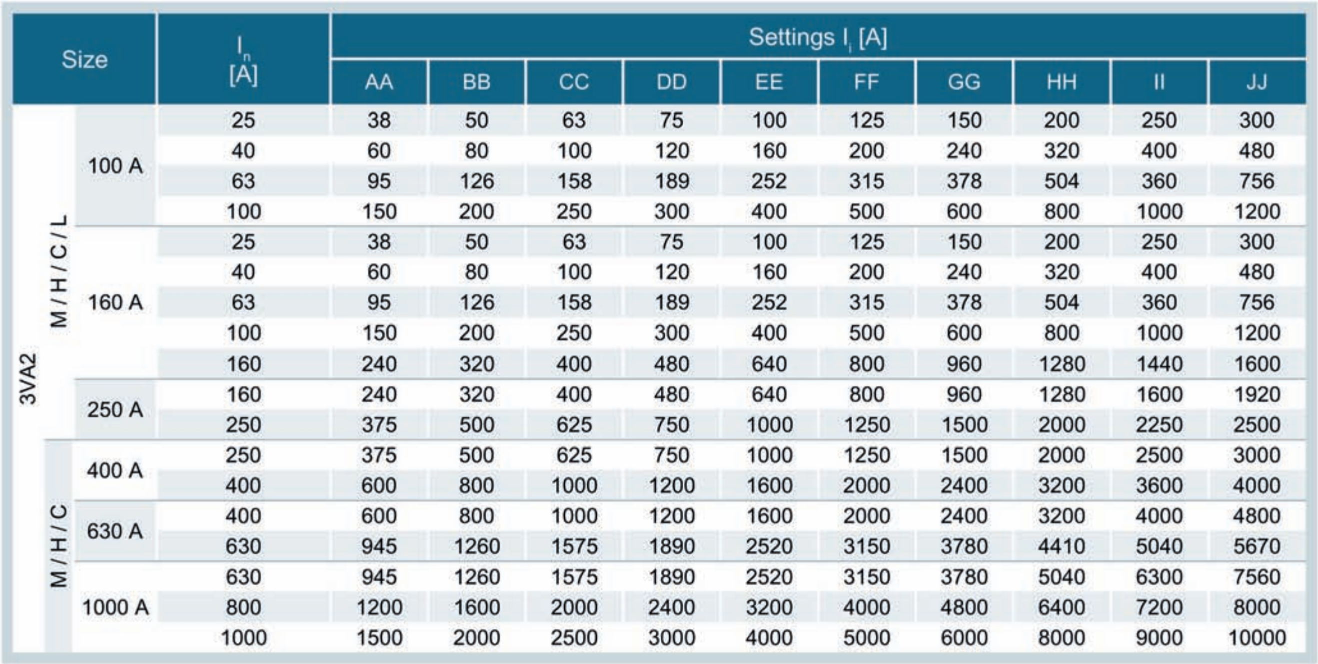

Size			I_n [A]	Settings I_i [A]									
				AA	BB	CC	DD	EE	FF	GG	HH	II	JJ
3VA2	M / H / C / L	100 A	25	38	50	63	75	100	125	150	200	250	300
			40	60	80	100	120	160	200	240	320	400	480
			63	95	126	158	189	252	315	378	504	360	756
			100	150	200	250	300	400	500	600	800	1000	1200
		160 A	25	38	50	63	75	100	125	150	200	250	300
			40	60	80	100	120	160	200	240	320	400	480
			63	95	126	158	189	252	315	378	504	360	756
			100	150	200	250	300	400	500	600	800	1000	1200
			160	240	320	400	480	640	800	960	1280	1440	1600
		250 A	160	240	320	400	480	640	800	960	1280	1600	1920
			250	375	500	625	750	1000	1250	1500	2000	2250	2500
	M / H / C	400 A	250	375	500	625	750	1000	1250	1500	2000	2500	3000
			400	600	800	1000	1200	1600	2000	2400	3200	3600	4000
		630 A	400	600	800	1000	1200	1600	2000	2400	3200	4000	4800
			630	945	1260	1575	1890	2520	3150	3780	4410	5040	5670
		1000 A	630	945	1260	1575	1890	2520	3150	3780	5040	6300	7560
			800	1200	1600	2000	2400	3200	4000	4800	6400	7200	8000
			1000	1500	2000	2500	3000	4000	5000	6000	8000	9000	10000

Neutral conductor protection N:

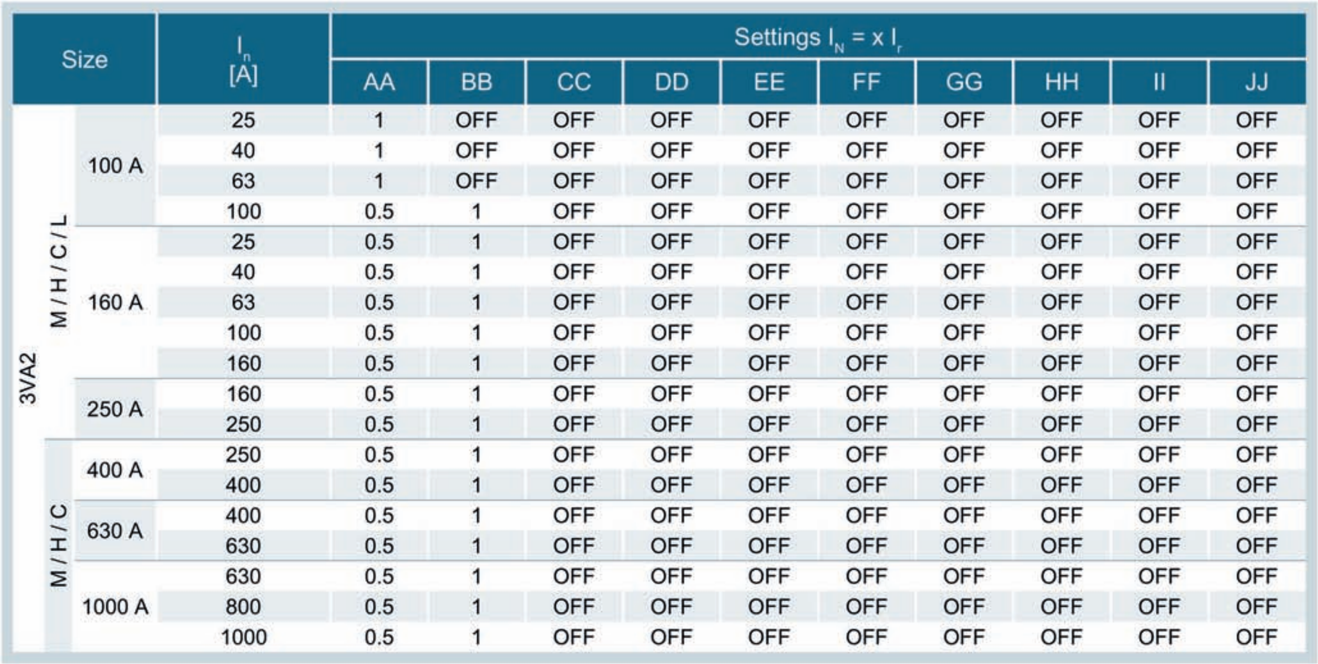

Size			I_n [A]	Settings $I_N = x\ I_r$									
				AA	BB	CC	DD	EE	FF	GG	HH	II	JJ
3VA2	M / H / C / L	100 A	25	1	OFF	OFF	OFF	OFF	OFF	OFF	OFF	OFF	OFF
			40	1	OFF	OFF	OFF	OFF	OFF	OFF	OFF	OFF	OFF
			63	1	OFF	OFF	OFF	OFF	OFF	OFF	OFF	OFF	OFF
			100	0.5	1	OFF	OFF	OFF	OFF	OFF	OFF	OFF	OFF
		160 A	25	0.5	1	OFF	OFF	OFF	OFF	OFF	OFF	OFF	OFF
			40	0.5	1	OFF	OFF	OFF	OFF	OFF	OFF	OFF	OFF
			63	0.5	1	OFF	OFF	OFF	OFF	OFF	OFF	OFF	OFF
			100	0.5	1	OFF	OFF	OFF	OFF	OFF	OFF	OFF	OFF
			160	0.5	1	OFF	OFF	OFF	OFF	OFF	OFF	OFF	OFF
		250 A	160	0.5	1	OFF	OFF	OFF	OFF	OFF	OFF	OFF	OFF
			250	0.5	1	OFF	OFF	OFF	OFF	OFF	OFF	OFF	OFF
	M / H / C	400 A	250	0.5	1	OFF	OFF	OFF	OFF	OFF	OFF	OFF	OFF
			400	0.5	1	OFF	OFF	OFF	OFF	OFF	OFF	OFF	OFF
		630 A	400	0.5	1	OFF	OFF	OFF	OFF	OFF	OFF	OFF	OFF
			630	0.5	1	OFF	OFF	OFF	OFF	OFF	OFF	OFF	OFF
		1000 A	630	0.5	1	OFF	OFF	OFF	OFF	OFF	OFF	OFF	OFF
			800	0.5	1	OFF	OFF	OFF	OFF	OFF	OFF	OFF	OFF
			1000	0.5	1	OFF	OFF	OFF	OFF	OFF	OFF	OFF	OFF

Electronic trip unit ETU330 LIG

ETU330 LIG 3-pole:

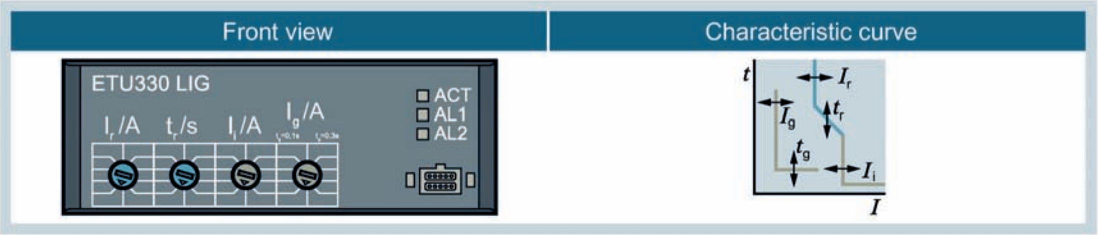

ETU330 LIG 4-pole:

Line protection - function LIG

The ETU330 electronic trip unit has:

- Adjustable parameter settings I_r and t_r for overload protection (L)
- Adjustable parameter setting I_i for instantaneous short-circuit protection (I)
- Adjustable parameter settings I_g and t_g for ground-fault protection (G)
- With 4-pole versions only: Neutral conductor protection (N) which can be deactivated
- Permanently active thermal memory, cannot be deactivated

ETU330 parameters:

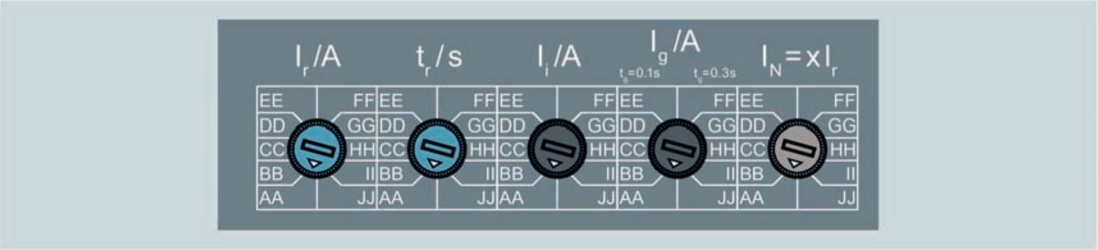

Overload protection L:

Size			I_n [A]	Settings I_r [A]									
				AA	BB	CC	DD	EE	FF	GG	HH	II	JJ
3VA2	M / H / C / L	100 A	25	10	12	14	16	18	20	22	23	24	25
			40	16	20	24	28	30	32	34	36	38	40
			63	25	30	35	40	45	50	54	57	60	63
			100	40	50	63	70	75	80	85	90	95	100
		160 A	25	10	12	14	16	18	20	22	23	24	25
			40	16	20	24	28	30	32	34	36	38	40
			63	25	30	35	40	45	50	54	57	60	63
			100	40	50	63	70	75	80	85	90	95	100
			160	63	80	95	110	125	140	145	150	155	160
		250 A	160	63	80	95	110	125	140	145	150	155	160
			250	100	125	150	175	200	210	220	230	240	250
	M / H / C	400 A	250	100	125	150	175	200	210	220	230	240	250
			400	160	200	240	280	300	320	340	360	380	400
		630 A	400	160	200	240	280	300	320	340	360	380	400
			630	250	315	400	450	500	525	550	575	600	630
		1000 A	630	250	315	400	450	500	525	550	575	600	630
			800	320	400	500	550	600	630	680	720	760	800
			1000	400	500	630	700	750	800	850	900	950	1000

Size			I_n [A]	Settings t_r [s]									
				AA	BB	CC	DD	EE	FF	GG	HH	II	JJ
3VA2	M / H / C / L	100 A	25	0.5	0.75	1	2	3	5	8	10	14	17
			40	0.5	0.75	1	2	3	5	8	10	14	17
			63	0.5	0.75	1	2	3	5	8	10	14	17
			100	0.5	0.75	1	2	3	5	8	10	14	17
		160 A	25	0.5	0.75	1	2	3	5	8	10	14	17
			40	0.5	0.75	1	2	3	5	8	10	14	17
			63	0.5	0.75	1	2	3	5	8	10	14	17
			100	0.5	0.75	1	2	3	5	8	10	14	17
			160	0.5	0.75	1	2	3	5	8	10	14	17
		250 A	160	0.5	0.75	1	2	3	5	8	10	14	17
			250	0.5	0.75	1	2	3	5	8	10	14	15
	M / H / C	400 A	250	0.5	0.75	1	2	3	5	8	10	14	17
			400	0.5	0.75	1	2	3	5	8	10	14	17
		630 A	400	0.5	0.75	1	2	3	5	8	10	14	17
			630	0.5	0.75	1	2	3	5	8	10	11	12
		1000 A	630	0.5	0.75	1	2	3	5	8	10	14	17
			800	0.5	0.75	1	2	3	5	8	10	14	17
			1000	0.5	0.75	1	2	3	5	8	10	14	17

Instantaneous short-circuit protection I:

Size			I_n [A]	Settings I_i [A]									
				AA	BB	CC	DD	EE	FF	GG	HH	II	JJ
3VA2	M / H / C / L	100 A	25	38	50	63	75	100	125	150	200	250	300
			40	60	80	100	120	160	200	240	320	400	480
			63	95	126	158	189	252	315	378	504	360	756
			100	150	200	250	300	400	500	600	800	1000	1200
		160 A	25	38	50	63	75	100	125	150	200	250	300
			40	60	80	100	120	160	200	240	320	400	480
			63	95	126	158	189	252	315	378	504	360	756
			100	150	200	250	300	400	500	600	800	1000	1200
			160	240	320	400	480	640	800	960	1280	1440	1600
		250 A	160	240	320	400	480	640	800	960	1280	1600	1920
			250	375	500	625	750	1000	1250	1500	2000	2250	2500
	M / H / C	400 A	250	375	500	625	750	1000	1250	1500	2000	2500	3000
			400	600	800	1000	1200	1600	2000	2400	3200	3600	4000
		630 A	400	600	800	1000	1200	1600	2000	2400	3200	4000	4800
			630	945	1260	1575	1890	2520	3150	3780	4410	5040	5670
		1000 A	630	945	1260	1575	1890	2520	3150	3780	5040	6300	7560
			800	1200	1600	2000	2400	3200	4000	4800	6400	7200	8000
			1000	1500	2000	2500	3000	4000	5000	6000	8000	9000	10000

Ground-fault protection G:

Size			I_n [A]	Settings I_g [A]									
				t_g = 0.1 s					t_g = 0.3 s				
				AA	BB	CC	DD	EE	FF	GG	HH	II	JJ
3VA2	M / H / C / L	100 A	25	15	18	20	22	25	15	18	20	22	25
			40	16	24	28	32	40	16	24	28	32	40
			63	16	25	38	50	63	16	25	38	50	63
			100	20	40	60	80	100	20	40	60	80	100
		160 A	25	15	18	20	22	25	15	18	20	22	25
			40	16	24	28	32	40	16	24	28	32	40
			63	16	25	38	50	63	16	25	38	50	63
			100	20	40	60	80	100	20	40	60	80	100
			160	32	64	96	128	160	32	64	96	128	160
		250 A	160	32	64	96	128	160	32	64	96	128	160
			250	50	100	150	200	250	50	100	150	200	250
	M / H / C	400 A	250	50	100	150	200	250	50	100	150	200	250
			400	80	160	240	320	400	80	160	240	320	400
		630 A	400	80	160	240	320	400	80	160	240	320	400
			630	126	252	378	504	630	126	252	378	504	630
		1000 A	630	126	252	378	504	630	126	252	378	504	630
			800	160	320	480	640	800	160	320	480	640	800
			1000	200	400	600	800	1000	200	400	600	800	1000

The ground-fault protection cannot be deactivated.

Neutral conductor protection N:

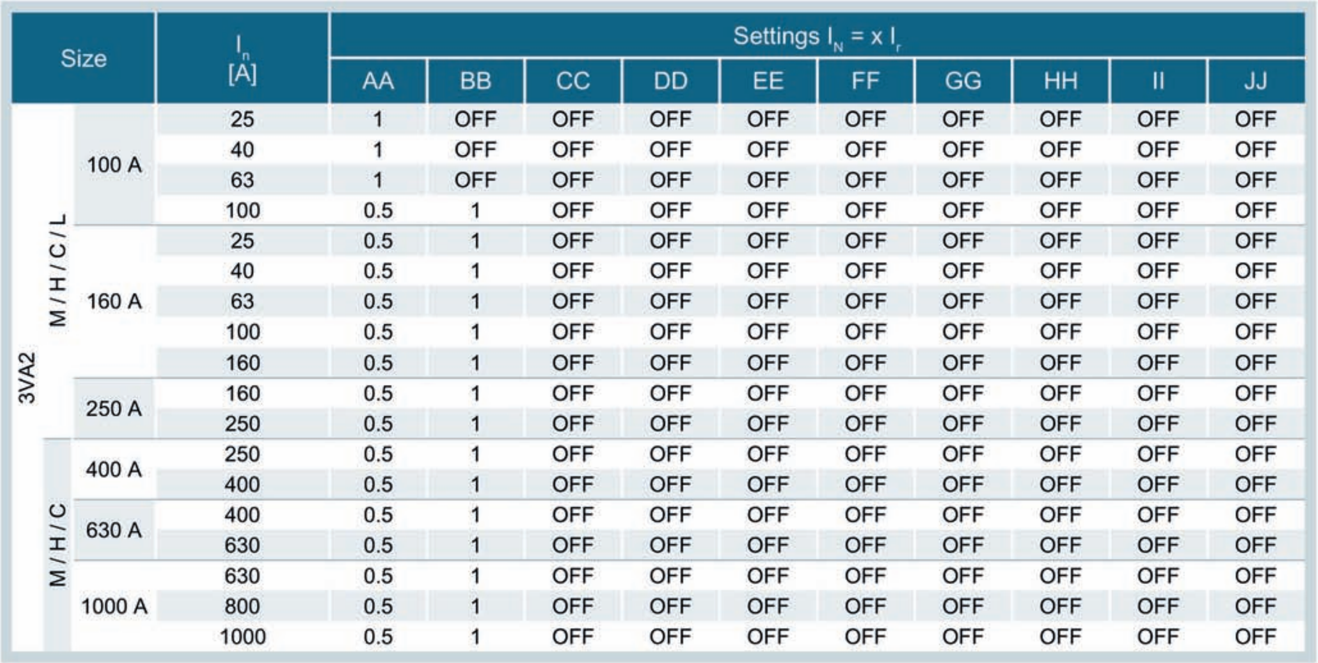

Size			I_n [A]	Settings I_N = x I_r									
				AA	BB	CC	DD	EE	FF	GG	HH	II	JJ
3VA2	M / H / C / L	100 A	25	1	OFF	OFF	OFF	OFF	OFF	OFF	OFF	OFF	OFF
			40	1	OFF	OFF	OFF	OFF	OFF	OFF	OFF	OFF	OFF
			63	1	OFF	OFF	OFF	OFF	OFF	OFF	OFF	OFF	OFF
			100	0.5	1	OFF	OFF	OFF	OFF	OFF	OFF	OFF	OFF
		160 A	25	0.5	1	OFF	OFF	OFF	OFF	OFF	OFF	OFF	OFF
			40	0.5	1	OFF	OFF	OFF	OFF	OFF	OFF	OFF	OFF
			63	0.5	1	OFF	OFF	OFF	OFF	OFF	OFF	OFF	OFF
			100	0.5	1	OFF	OFF	OFF	OFF	OFF	OFF	OFF	OFF
			160	0.5	1	OFF	OFF	OFF	OFF	OFF	OFF	OFF	OFF
		250 A	160	0.5	1	OFF	OFF	OFF	OFF	OFF	OFF	OFF	OFF
			250	0.5	1	OFF	OFF	OFF	OFF	OFF	OFF	OFF	OFF
	M / H / C	400 A	250	0.5	1	OFF	OFF	OFF	OFF	OFF	OFF	OFF	OFF
			400	0.5	1	OFF	OFF	OFF	OFF	OFF	OFF	OFF	OFF
		630 A	400	0.5	1	OFF	OFF	OFF	OFF	OFF	OFF	OFF	OFF
			630	0.5	1	OFF	OFF	OFF	OFF	OFF	OFF	OFF	OFF
		1000 A	630	0.5	1	OFF	OFF	OFF	OFF	OFF	OFF	OFF	OFF
			800	0.5	1	OFF	OFF	OFF	OFF	OFF	OFF	OFF	OFF
			1000	0.5	1	OFF	OFF	OFF	OFF	OFF	OFF	OFF	OFF

Electronic trip unit ETU340 ELISA LI

The 3VA2 molded case circuit breaker with the ETU340 ELISA electronic trip unit has been specially developed for implementing selectivity with fuses in operational class gG. The tripping characteristic of the ETU340 ELISA of the 3VA2 molded case circuit breaker exhibits a similar characteristic to fuses of operational class gG, e.g. LV HRC fuses, across the entire overcurrent range.

From the selectivity perspective, this ETU340 ELISA is therefore especially suitable for combination with upstream and downstream fuses.

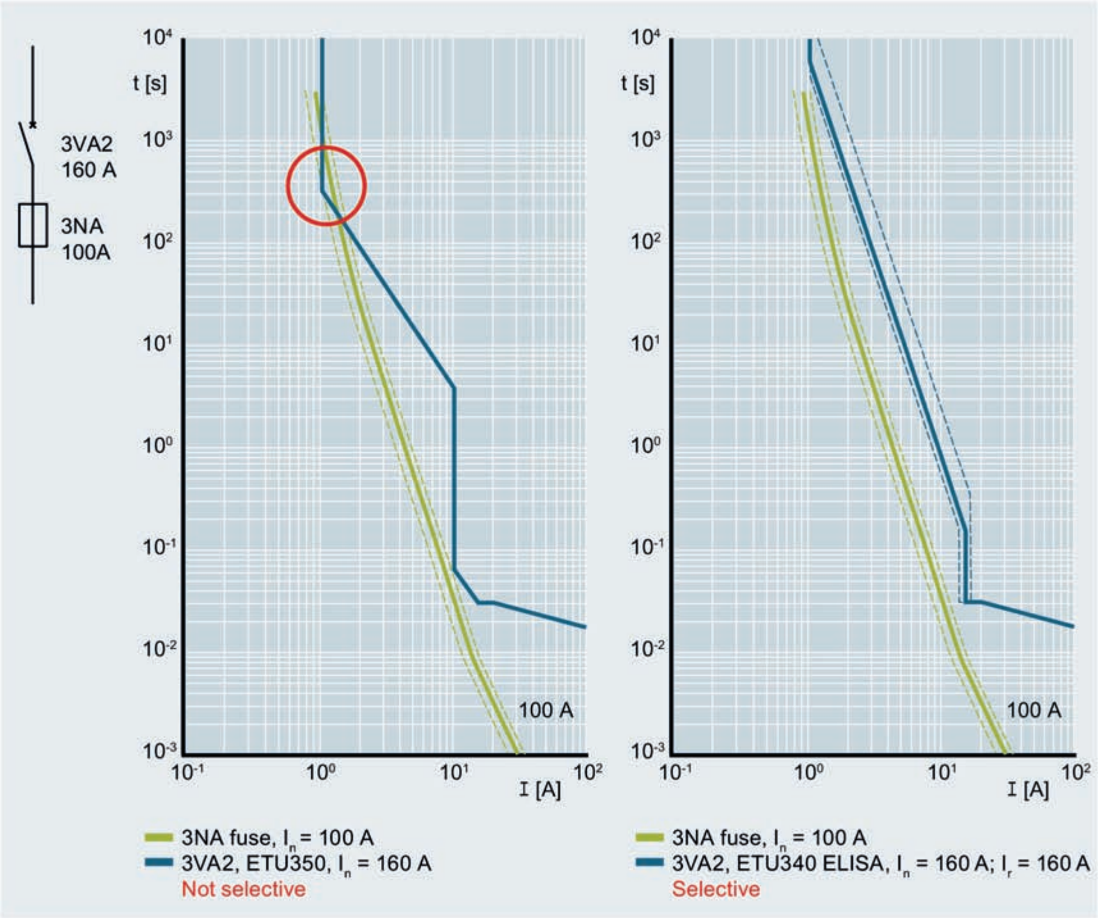

Thanks to the ELISA function of the ETU340, for example, total selectivity is afforded between an upstream 3VA2 molded case circuit breaker with a rated current I_n of just 160 A and a downstream 100 A LV HRC fuse. This advantageous feature allows users to choose cheaper circuit breakers and configure additional grading levels more easily in low-voltage networks.

Advantages of 3VA2 molded case circuit breaker with ETU340 ELISA over fuses

- The extensive internal and external accessories of the 3VA2 molded case circuit breaker can be used.
- When the EFB300 external function box is used, it is possible to output alarms from the ETU, e.g. reason for tripping overload warning (overload or short circuit).
- Adjustable operating current for the overload release, thereby making it possible to use smaller cable cross sections
- Selectivity to downstream fuses 1 : 1.6
- Can be closed again immediately after tripping and troubleshooting; no need to stock replacement fuses

---

Note

The minimum short-circuit current at the line side I''_{kmin} must be at least 7 times the circuit breaker's rated current I_n to trip the molded case circuit breaker after 5 s in compliance with IEC 60364-4-43, DIN VDE 0100-430.

ETU340 ELISA 3-pole:

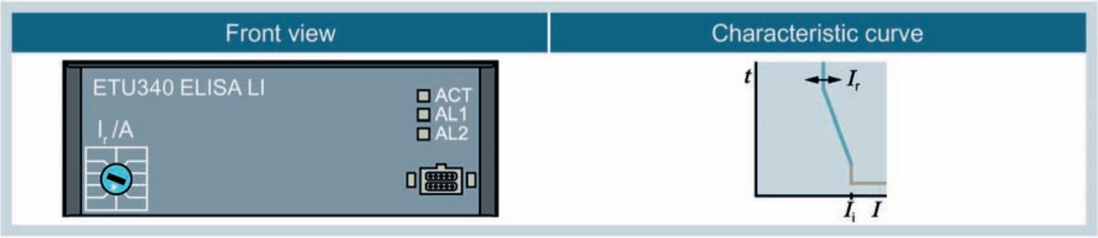

ETU340 ELISA 4-pole:

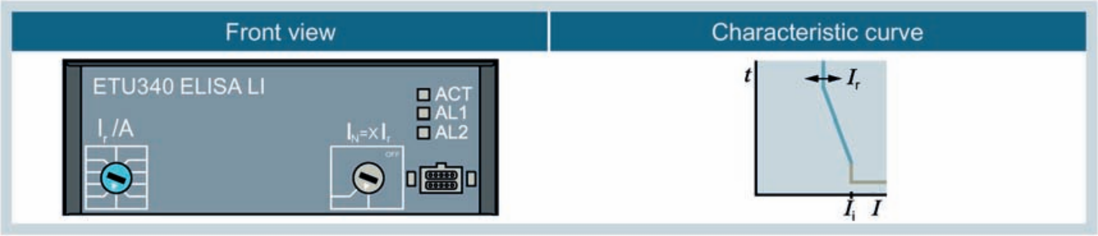

Line protection – function ELISA LI

The ETU340 ELISA electronic trip unit has:

- Simulation of the tripping characteristic of a fuse in a circuit breaker
- Adjustable parameter setting I_r for overload protection (L)
- Increased, fixed parameter setting I_i for instantaneous short-circuit protection (I) – $I_i = 15 \times I_r$
- With 4-pole versions only: Neutral conductor protection (N) which can be deactivated
- Permanently active thermal memory, cannot be deactivated

ETU340 ELISA parameters

Setting values I_r

Size			I_n [A]	Settings I_r [A]									
				AA	BB	CC	DD	EE	FF	GG	HH	II	JJ
3VA2	M / H / C / L	160 A	25	10	12	14	16	18	20	22	23	24	25
			40	16	20	25	28	30	32	35	36	38	40
			63	25	32	35	40	45	50	54	57	60	63
			100	40	50	63	70	75	80	85	90	95	100
		250 A	160	63	80	100	110	125	140	145	150	155	160
	M / H / C	400 A	250	100	125	160	175	200	210	224	230	240	250
		630 A	400	160	200	224	250	300	315	340	355	380	400
			500	200	224	250	300	315	355	400	425	475	500
			630	250	300	315	355	400	425	500	575	600	630
		1000 A	630	250	300	315	355	400	425	500	575	600	630
			800	320	355	400	425	500	550	630	700	760	800
			1000	400	425	500	630	700	800	850	900	950	1000

Setting values I_i

The instantaneous short-circuit protection is permanently set to the highest possible value.

Size			I_n [A]	Settings I_i [A] (fixed)
3VA2	M / H / C / L	160 A	25	375
			40	600
			945	945
			100	1500
		250 A	160	2400
	M / H / C	400 A	250	3750
		630 A	400	6000
			500	7000
			630	5670
		1000 A	630	7560
			800	8000
			1000	10000

Setting values I_N

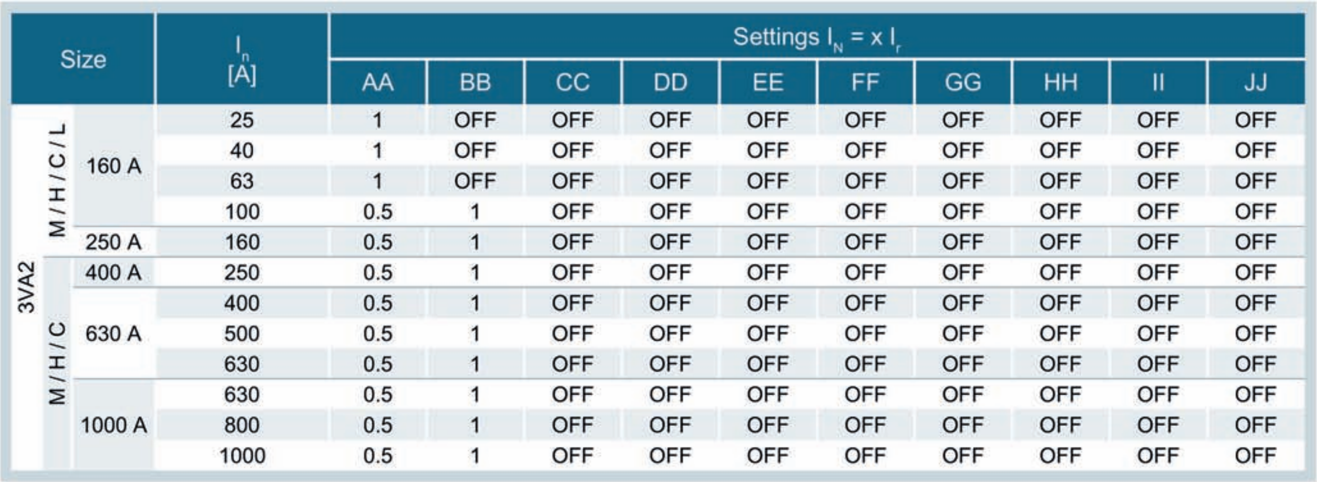

Size			I_n [A]	Settings $I_N = x\,I_r$									
				AA	BB	CC	DD	EE	FF	GG	HH	II	JJ
3VA2	M / H / C / L	160 A	25	1	OFF	OFF	OFF	OFF	OFF	OFF	OFF	OFF	OFF
			40	1	OFF	OFF	OFF	OFF	OFF	OFF	OFF	OFF	OFF
			63	1	OFF	OFF	OFF	OFF	OFF	OFF	OFF	OFF	OFF
			100	0.5	1	OFF	OFF	OFF	OFF	OFF	OFF	OFF	OFF
		250 A	160	0.5	1	OFF	OFF	OFF	OFF	OFF	OFF	OFF	OFF
	M / H / C	400 A	250	0.5	1	OFF	OFF	OFF	OFF	OFF	OFF	OFF	OFF
		630 A	400	0.5	1	OFF	OFF	OFF	OFF	OFF	OFF	OFF	OFF
			500	0.5	1	OFF	OFF	OFF	OFF	OFF	OFF	OFF	OFF
			630	0.5	1	OFF	OFF	OFF	OFF	OFF	OFF	OFF	OFF
		1000 A	630	0.5	1	OFF	OFF	OFF	OFF	OFF	OFF	OFF	OFF
			800	0.5	1	OFF	OFF	OFF	OFF	OFF	OFF	OFF	OFF
			1000	0.5	1	OFF	OFF	OFF	OFF	OFF	OFF	OFF	OFF

Electronic trip unit ETU350 LSI

ETU350 LSI 3-pole:

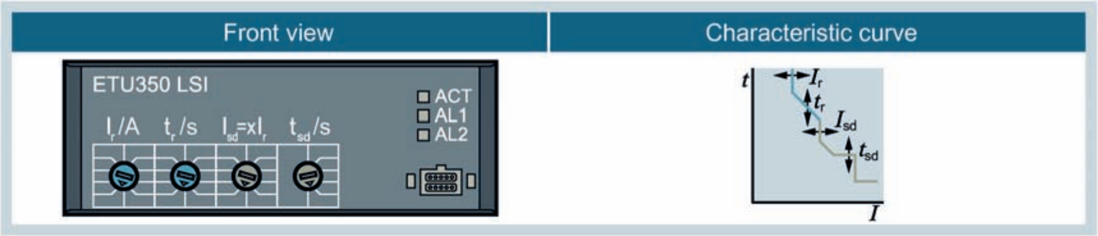

ETU350 LSI 4-pole:

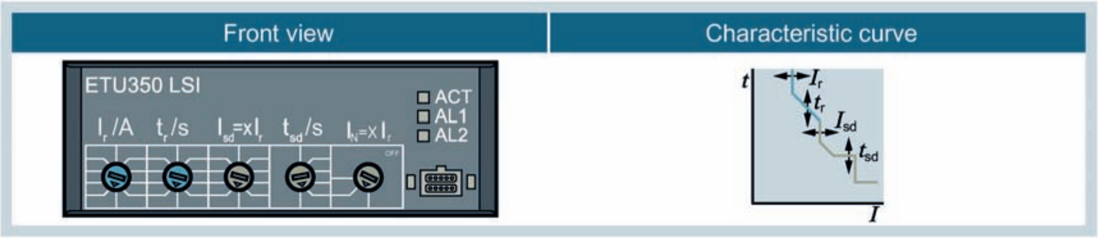

Line protection - function LSI

The ETU350 electronic trip unit has:

- Adjustable parameter settings I_r and t_r for overload protection (L)
- Adjustable parameter settings I_{sd} and t_{sd} for short-time delayed short circuit protection (S)
- Fixed parameter setting I_i for instantaneous short-circuit protection (I)
- With 4-pole versions only: Neutral conductor protection (N) which can be deactivated
- Permanently active thermal memory, cannot be deactivated

ETU350 parameters:

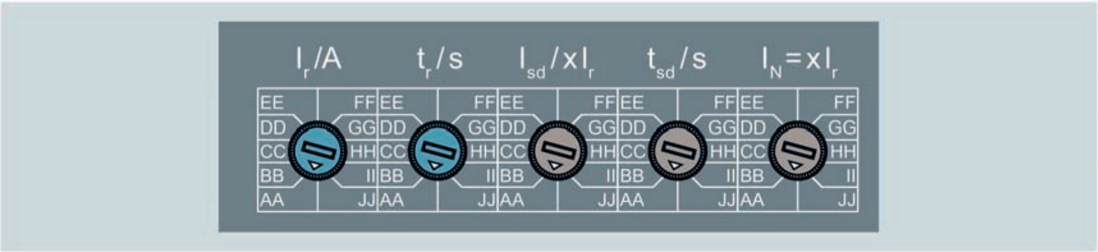

Overload protection L:

Size			I_n [A]	Settings I_r [A]									
				AA	BB	CC	DD	EE	FF	GG	HH	II	JJ
3VA2	M / H / C / L	100 A	25	10	12	14	16	18	20	22	23	24	25
			40	16	20	24	28	30	32	34	36	38	40
			63	25	30	35	40	45	50	54	57	60	63
			100	40	50	63	70	75	80	85	90	95	100
		160 A	25	10	12	14	16	18	20	22	23	24	25
			40	16	20	24	28	30	32	34	36	38	40
			63	25	30	35	40	45	50	54	57	60	63
			100	40	50	63	70	75	80	85	90	95	100
			160	63	80	95	110	125	140	145	150	155	160
		250 A	160	63	80	95	110	125	140	145	150	155	160
			250	100	125	150	175	200	210	220	230	240	250
	M / H / C	400 A	250	100	125	150	175	200	210	220	230	240	250
			400	160	200	240	280	300	320	340	360	380	400
		630 A	400	160	200	240	280	300	320	340	360	380	400
			630	250	315	400	450	500	525	550	575	600	630
		1000 A	630	250	315	400	450	500	525	550	575	600	630
			800	320	400	500	550	600	630	680	720	760	800
			1000	400	500	630	700	750	800	850	900	950	1000

Size			I_n [A]	Settings t_r [s]									
				AA	BB	CC	DD	EE	FF	GG	HH	II	JJ
3VA2	M / H / C / L	100 A	25	0.5	0.75	1	2	3	5	8	10	14	17
			40	0.5	0.75	1	2	3	5	8	10	14	17
			63	0.5	0.75	1	2	3	5	8	10	14	17
			100	0.5	0.75	1	2	3	5	8	10	14	17
		160 A	25	0.5	0.75	1	2	3	5	8	10	14	17
			40	0.5	0.75	1	2	3	5	8	10	14	17
			63	0.5	0.75	1	2	3	5	8	10	14	17
			100	0.5	0.75	1	2	3	5	8	10	14	17
			160	0.5	0.75	1	2	3	5	8	10	14	17
		250 A	160	0.5	0.75	1	2	3	5	8	10	14	17
			250	0.5	0.75	1	2	3	5	8	10	14	15
	M / H / C	400 A	250	0.5	0.75	1	2	3	5	8	10	14	17
			400	0.5	0.75	1	2	3	5	8	10	14	17
		630 A	400	0.5	0.75	1	2	3	5	8	10	14	17
			630	0.5	0.75	1	2	3	5	8	10	11	12
		1000 A	630	0.5	0.75	1	2	3	5	8	10	14	17
			800	0.5	0.75	1	2	3	5	8	10	14	17
			1000	0.5	0.75	1	2	3	5	8	10	14	17

Short-time delayed short-circuit protection S:

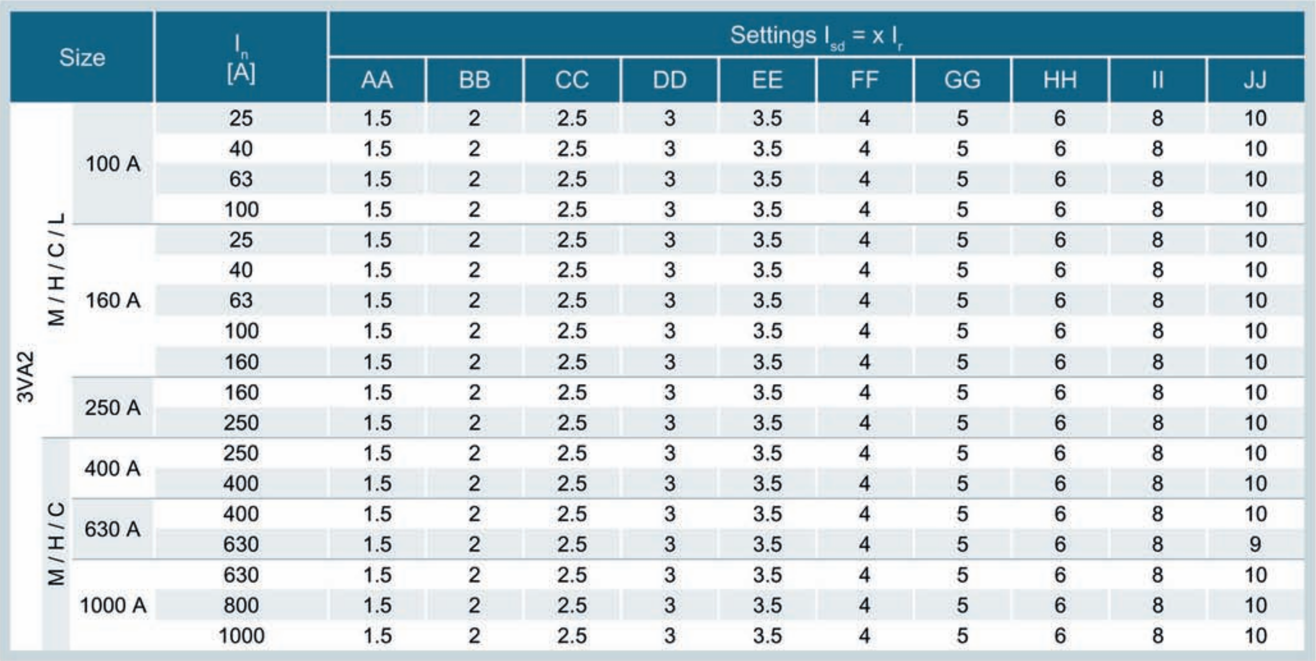

Size			I_n [A]	Settings $I_{sd} = x\ I_r$									
				AA	BB	CC	DD	EE	FF	GG	HH	II	JJ
3VA2	M / H / C / L	100 A	25	1.5	2	2.5	3	3.5	4	5	6	8	10
			40	1.5	2	2.5	3	3.5	4	5	6	8	10
			63	1.5	2	2.5	3	3.5	4	5	6	8	10
			100	1.5	2	2.5	3	3.5	4	5	6	8	10
		160 A	25	1.5	2	2.5	3	3.5	4	5	6	8	10
			40	1.5	2	2.5	3	3.5	4	5	6	8	10
			63	1.5	2	2.5	3	3.5	4	5	6	8	10
			100	1.5	2	2.5	3	3.5	4	5	6	8	10
			160	1.5	2	2.5	3	3.5	4	5	6	8	10
		250 A	160	1.5	2	2.5	3	3.5	4	5	6	8	10
			250	1.5	2	2.5	3	3.5	4	5	6	8	10
	M / H / C	400 A	250	1.5	2	2.5	3	3.5	4	5	6	8	10
			400	1.5	2	2.5	3	3.5	4	5	6	8	10
		630 A	400	1.5	2	2.5	3	3.5	4	5	6	8	10
			630	1.5	2	2.5	3	3.5	4	5	6	8	9
		1000 A	630	1.5	2	2.5	3	3.5	4	5	6	8	10
			800	1.5	2	2.5	3	3.5	4	5	6	8	10
			1000	1.5	2	2.5	3	3.5	4	5	6	8	10

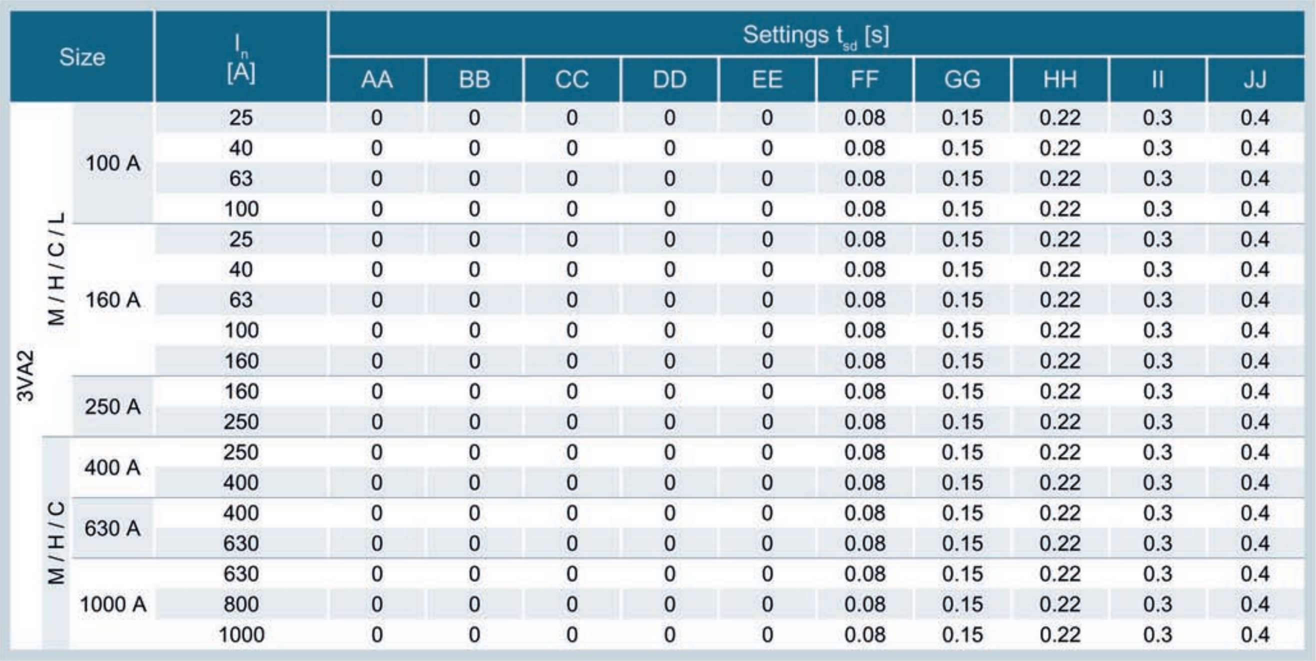

Size			I_n [A]	Settings t_{sd} [s]									
				AA	BB	CC	DD	EE	FF	GG	HH	II	JJ
3VA2	M / H / C / L	100 A	25	0	0	0	0	0	0.08	0.15	0.22	0.3	0.4
			40	0	0	0	0	0	0.08	0.15	0.22	0.3	0.4
			63	0	0	0	0	0	0.08	0.15	0.22	0.3	0.4
			100	0	0	0	0	0	0.08	0.15	0.22	0.3	0.4
		160 A	25	0	0	0	0	0	0.08	0.15	0.22	0.3	0.4
			40	0	0	0	0	0	0.08	0.15	0.22	0.3	0.4
			63	0	0	0	0	0	0.08	0.15	0.22	0.3	0.4
			100	0	0	0	0	0	0.08	0.15	0.22	0.3	0.4
			160	0	0	0	0	0	0.08	0.15	0.22	0.3	0.4
		250 A	160	0	0	0	0	0	0.08	0.15	0.22	0.3	0.4
			250	0	0	0	0	0	0.08	0.15	0.22	0.3	0.4
	M / H / C	400 A	250	0	0	0	0	0	0.08	0.15	0.22	0.3	0.4
			400	0	0	0	0	0	0.08	0.15	0.22	0.3	0.4
		630 A	400	0	0	0	0	0	0.08	0.15	0.22	0.3	0.4
			630	0	0	0	0	0	0.08	0.15	0.22	0.3	0.4
		1000 A	630	0	0	0	0	0	0.08	0.15	0.22	0.3	0.4
			800	0	0	0	0	0	0.08	0.15	0.22	0.3	0.4
			1000	0	0	0	0	0	0.08	0.15	0.22	0.3	0.4

Instantaneous short-circuit protection I:

The instantaneous short-circuit protection is permanently set to the highest possible value.

Size			I_n [A]	Settings I_i [A] (fixed)
3VA2	M / H / C / L	100 A	25	300
			40	480
			63	756
			100	1200
		160 A	25	300
			40	480
			63	756
			100	1200
			160	1600
		250 A	160	1920
			250	2500
	M / H / C	400 A	250	3000
			400	4000
		630 A	400	4800
			630	5670
		1000 A	630	7560
			800	8000
			1000	10000

Neutral conductor protection N:

Size			I_n [A]	Settings $I_N = x\ I_r$									
				AA	BB	CC	DD	EE	FF	GG	HH	II	JJ
3VA2	M / H / C / L	100 A	25	1	OFF	OFF	OFF	OFF	OFF	OFF	OFF	OFF	OFF
			40	1	OFF	OFF	OFF	OFF	OFF	OFF	OFF	OFF	OFF
			63	1	OFF	OFF	OFF	OFF	OFF	OFF	OFF	OFF	OFF
			100	0.5	1	OFF	OFF	OFF	OFF	OFF	OFF	OFF	OFF
		160 A	25	0.5	1	OFF	OFF	OFF	OFF	OFF	OFF	OFF	OFF
			40	0.5	1	OFF	OFF	OFF	OFF	OFF	OFF	OFF	OFF
			63	0.5	1	OFF	OFF	OFF	OFF	OFF	OFF	OFF	OFF
			100	0.5	1	OFF	OFF	OFF	OFF	OFF	OFF	OFF	OFF
			160	0.5	1	OFF	OFF	OFF	OFF	OFF	OFF	OFF	OFF
		250 A	160	0.5	1	OFF	OFF	OFF	OFF	OFF	OFF	OFF	OFF
			250	0.5	1	OFF	OFF	OFF	OFF	OFF	OFF	OFF	OFF
	M / H / C	400 A	250	0.5	1	OFF	OFF	OFF	OFF	OFF	OFF	OFF	OFF
			400	0.5	1	OFF	OFF	OFF	OFF	OFF	OFF	OFF	OFF
		630 A	400	0.5	1	OFF	OFF	OFF	OFF	OFF	OFF	OFF	OFF
			630	0.5	1	OFF	OFF	OFF	OFF	OFF	OFF	OFF	OFF
		1000 A	630	0.5	1	OFF	OFF	OFF	OFF	OFF	OFF	OFF	OFF
			800	0.5	1	OFF	OFF	OFF	OFF	OFF	OFF	OFF	OFF
			1000	0.5	1	OFF	OFF	OFF	OFF	OFF	OFF	OFF	OFF

5-series and 8-series electronic trip units

Parameter input via display unit

With 5-series and 8-series electronic trip units, it is possible to set more parameters and to scale the selection of parameters more finely than on 3-series trip units.

Parameters are set via the display unit and its buttons. This functionality is available, however, only if a separate, dedicated power supply is connected to the molded case circuit breakers.

Potential alternatives for this power supply:

- 24 V supplied externally via:
  - EFB300 external function box
  - temporarily connected TD300 or TD500 test device
  - internal 24 V module
  - internal COM060 communication module
- Current flow > 20% I_n in one of the 3 phases

A description of the parameter display can be found in chapter "Operator controls (Page 93)".

Additional features of 8-series units

In addition to the features shared with 5-series trip units, 8-series units also offer:

- With three-pole molded case circuit breakers, a voltage tap for each phase and the option of connecting the potential of the neutral conductor
  With four-pole molded case circuit breakers, four internal voltage taps are provided for measuring the conductor voltages
- Additional measurement of power values (only possible with an external 24 V supply)

Note

In order to avoid the display of small ghost currents (e.g. when the breaker is switched off), all currents below 5% of rated current are displayed as "0" as standard. This threshold can be changed using powerconfig.

Electronic trip units ETU550 LSI and ETU850 LSI

ETU550 LSI 3-pole and 4-pole units:

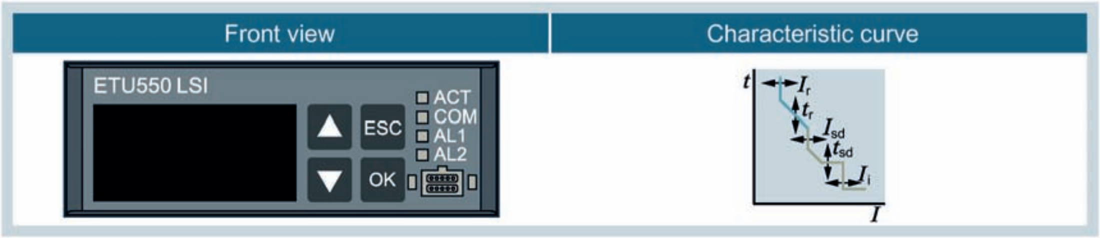

ETU850 LSI 3-pole and 4-pole units:

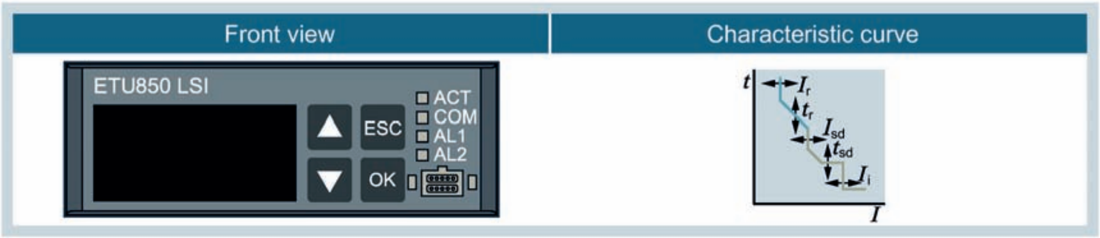

Line protection - function LSI

The ETU550 and ETU850 electronic trip units have:

- Adjustable parameter settings I_r and t_r for overload protection (L)
- Adjustable parameter settings I_{sd} and t_{sd} for short-time delayed short circuit protection (S)
- Adjustable parameter setting I_i for instantaneous short-circuit protection (I)
- With 4-pole versions: adjustable parameter setting I_N for neutral conductor protection (N) (can be activated optionally with 3-pole versions when an external current transformer is used for the neutral conductor)

ETU550 / ETU850 parameters (3-pole version):

Size			I_n [A]	I_r [A]	t_r [s]	I_{sd} [A]	t_{sd} [s]	I_i [A]	I_N [A] [1]
3VA2	M / H / C / L	100 A	25	10 … 25	0.5 … 25	15 … 250	0.05 … 0.5	38 … 300	10 … 40 / OFF
			40	16 … 40		24 … 400		60 … 480	16 … 63 / OFF
			63	25 … 63		38 … 630		95 … 756	25 … 100 / OFF
			100	40 … 100		60 … 1000		150 … 1200	20 … 160 / OFF
		160 A	25	10 … 25		15 … 250		38 … 300	10 … 40 / OFF
			40	16 … 40		24 … 400		60 … 480	16 … 63 / OFF
			63	25 … 63		38 … 630		95 … 756	25 … 100 / OFF
			100	40 … 100		60 … 1000		150 … 1200	20 … 160 / OFF
			160	63 … 160	0.5 … 20	96 … 1600		240 … 1600	32 … 250 / OFF
		250 A	160	63 … 160	0.5 … 25	96 … 1600		240 … 1920	32 … 250 / OFF
			250	100 … 250	0.5 … 15	150 … 2500		375 … 2500	50 … 400 / OFF
	M / H / C	400 A	250	100 … 250	0.5 … 25	150 … 2500		375 … 3000	50 … 400 / OFF
			400	160 … 400	0.5 … 17	240 … 4000		600 … 4000	80 … 630 / OFF
		630 A	400	160 … 400	0.5 … 25	240 … 4000		600 … 6000	80 … 630 / OFF
			500	200 … 500	0.5 … 20	300 … 5000		750 … 7000	100 … 800 / OFF
			630	250 … 630	0.5 … 12	378 … 5670		945 … 5670	126 … 1000 / OFF
		1000 A	630	250 … 630	0.5 … 25	378 … 6300		945 … 7560	126 … 1000 / OFF
			800	320 … 800		480 … 8000		1200 … 8000	160 … 1280 / OFF
			1000	400 … 1000		600 … 10000		1500 … 12000	200 … 1600 / OFF

[1] only 3-pole version with external current transformer for N conductor

ETU550 / ETU850 parameters (4-pole version):

Size			I_n [A]	I_r [A]	t_r [s]	I_{sd} [A]	t_{sd} [s]	I_i [A]	I_N [A]
3VA2	M / H / C / L	100 A	25	10 … 25	0.5 … 25	15 … 250	0.05 … 0.5	38 … 300	10 … 40 / OFF
			40	16 … 40		24 … 400		60 … 480	16 … 63 / OFF
			63	25 … 63		38 … 630		95 … 756	25 … 100 / OFF
			100	40 … 100		60 … 1000		150 … 1200	20 … 100 / OFF
		160 A	25	10 … 25		15 … 250		38 … 300	10 … 40 / OFF
			40	16 … 40		24 … 400		60 … 480	16 … 63 / OFF
			63	25 … 63		38 … 630		95 … 756	25 … 100 / OFF
			100	40 … 100		60 … 1000		150 … 1200	20 … 160 / OFF
			160	63 … 160	0.5 … 20	96 … 1600		240 … 1600	32 … 160 / OFF
		250 A	160	63 … 160	0.5 … 25	96 … 1600		240 … 1920	32 … 250 / OFF
			250	100 … 250	0.5 … 15	150 … 2500		375 … 2500	50 … 250 / OFF
	M / H / C	400 A	250	100 … 250	0.5 … 25	150 … 2500		375 … 3000	50 … 400 / OFF
			400	160 … 400	0.5 … 17	240 … 4000		600 … 4000	80 … 400 / OFF
		630 A	400	160 … 400	0.5 … 25	240 … 4000		600 … 6000	80 … 500 / OFF
			500	200 … 500	0.5 … 20	300 … 5000		750 … 7000	100 … 500 / OFF
			630	250 … 630	0.5 … 12	378 … 5670		945 … 5670	126 … 630 / OFF
		1000 A	630	250 … 630	0.5 … 25	378 … 6300		945 … 7560	126 … 630 / OFF
			800	320 … 800		480 … 8000		1200 … 8000	160 … 800 / OFF
			1000	400 … 1000		600 … 10000		1500 … 12000	200 … 1000 / OFF

Overload protection L:

- I_r Adjustable from 0.4 to 1.0 x I_n in absolute current values
  $I_r < 50$ A: in steps of 0.5 A
  $I_r \geq 50$ A: in steps of 1 A
- t_r Adjustable from 0.5 to 12 / 15 / 17 / 20 / 25 s (dependent on rated operational current and frame size)
  with a reference point of 6 x I_r.
  In steps of 0.1 s

The ETU550 LSI and ETU850 LSI units have a thermal memory; this can be deactivated.

Short-time delayed short-circuit protection S:

- I_{sd} Adjustable from 0.6 to 9 / 10 x I_n
  $I_{sd} < 50$ A: in steps of 0.5 A
  $I_{sd} \geq 50$ A: in steps of 1 A
- t_{sd} Adjustable from 0.05 to 0.5 s
  with a reference point of $I_{sd} = 8 \times I_r$
  in steps of 0.01 s

The curve shape I^2t = constant can be deactivated.

Instantaneous short-circuit protection I:

- I_i Sizes 100 A to 400 A:
  adjustable from 1.5 to 10 / 12 x I_n
  Size 630 A:
  See tables above
  in steps of 1 A

Neutral conductor protection N:

The neutral conductor protection function is available only for 3-pole molded case circuit breakers with external current transformer for N conductor for 4-pole molded case circuit breakers.

- I_N Adjustable in steps of 1 A
  3-pole breakers with external current transformer for N conductor:
  $I_n < 63$ A: 0.4 to 1.6 x I_n
  $I_n \geq 63$ A: 0.2 to 1.6 x I_n
  4-pole breakers:
  $I_n < 63$ A: 0.4 to 1.6 x I_n
  $I_n \geq 63$ A: 0.2 to 1.0 or 1.6 x I_n

Electronic trip units ETU560 LSIG and ETU860 LSIG

ETU560 LSIG 3-pole and 4-pole units:

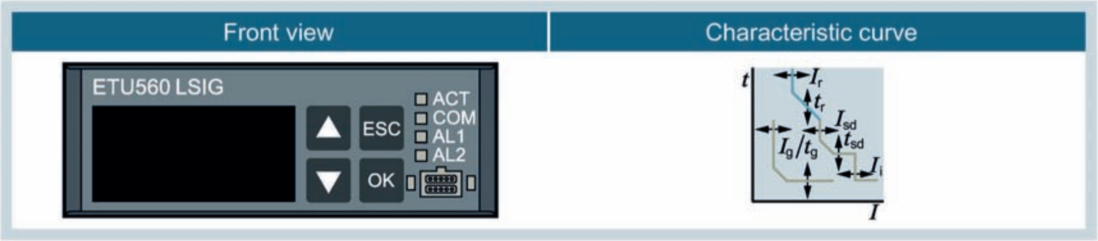

ETU860 LSIG 3-pole and 4-pole units:

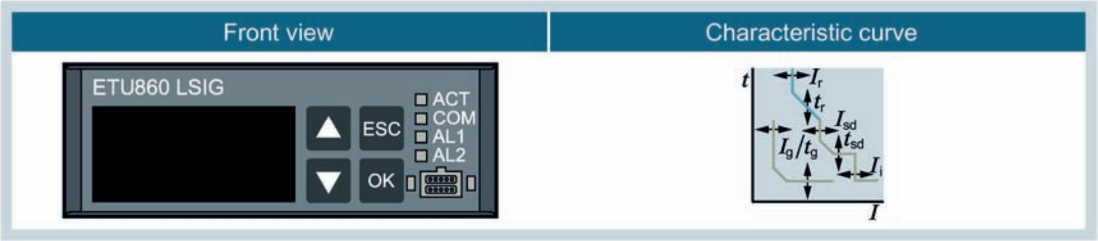

Line protection - function LSIG

The ETU560 and ETU860 electronic trip units have:

- Adjustable parameter settings I_r and t_r for overload protection (L)
- Adjustable parameter settings I_{sd} and t_{sd} for short-time delayed short circuit protection (S)
- Adjustable parameter setting I_i for instantaneous short-circuit protection (I)
- Adjustable parameter settings I_g and t_g for ground-fault protection (G)
- With 4-pole versions: adjustable parameter setting I_N for neutral conductor protection (N) optionally available for 3-pole versions

ETU560 / ETU860 parameters (3-pole version):

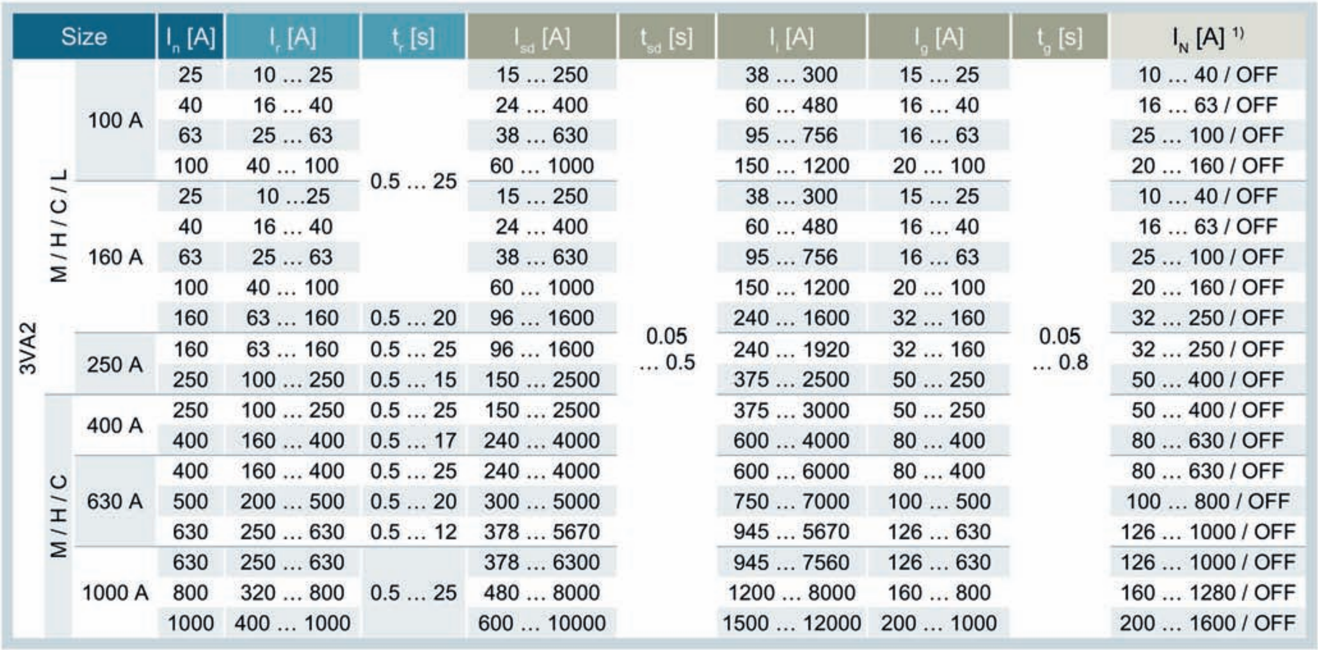

Size			I_n [A]	I_r [A]	t_r [s]	I_{sd} [A]	t_{sd} [s]	I_i [A]	I_g [A]	t_g [s]	I_N [A] [1]
3VA2	M / H / C / L	100 A	25	10 … 25	0.5 … 25	15 … 250	0.05 … 0.5	38 … 300	15 … 25	0.05 … 0.8	10 … 40 / OFF
			40	16 … 40		24 … 400		60 … 480	16 … 40		16 … 63 / OFF
			63	25 … 63		38 … 630		95 … 756	16 … 63		25 … 100 / OFF
			100	40 … 100		60 … 1000		150 … 1200	20 … 100		20 … 160 / OFF
		160 A	25	10 …25		15 … 250		38 … 300	15 … 25		10 … 40 / OFF
			40	16 … 40		24 … 400		60 … 480	16 … 40		16 … 63 / OFF
			63	25 … 63		38 … 630		95 … 756	16 … 63		25 … 100 / OFF
			100	40 … 100		60 … 1000		150 … 1200	20 … 100		20 … 160 / OFF
			160	63 … 160	0.5 … 20	96 … 1600		240 … 1600	32 … 160		32 … 250 / OFF
		250 A	160	63 … 160	0.5 … 25	96 … 1600		240 … 1920	32 … 160		32 … 250 / OFF
			250	100 … 250	0.5 … 15	150 … 2500		375 … 2500	50 … 250		50 … 400 / OFF
	M / H / C	400 A	250	100 … 250	0.5 … 25	150 … 2500		375 … 3000	50 … 250		50 … 400 / OFF
			400	160 … 400	0.5 … 17	240 … 4000		600 … 4000	80 … 400		80 … 630 / OFF
		630 A	400	160 … 400	0.5 … 25	240 … 4000		600 … 6000	80 … 400		80 … 630 / OFF
			500	200 … 500	0.5 … 20	300 … 5000		750 … 7000	100 … 500		100 … 800 / OFF
			630	250 … 630	0.5 … 12	378 … 5670		945 … 5670	126 … 630		126 … 1000 / OFF
		1000 A	630	250 … 630	0.5 … 25	378 … 6300		945 … 7560	126 … 630		126 … 1000 / OFF
			800	320 … 800		480 … 8000		1200 … 8000	160 … 800		160 … 1280 / OFF
			1000	400 … 1000		600 … 10000		1500 … 12000	200 … 1000		200 … 1600 / OFF

[1] only 3-pole version with external current transformer for N conductor

ETU560 / ETU860 parameters (4-pole version):

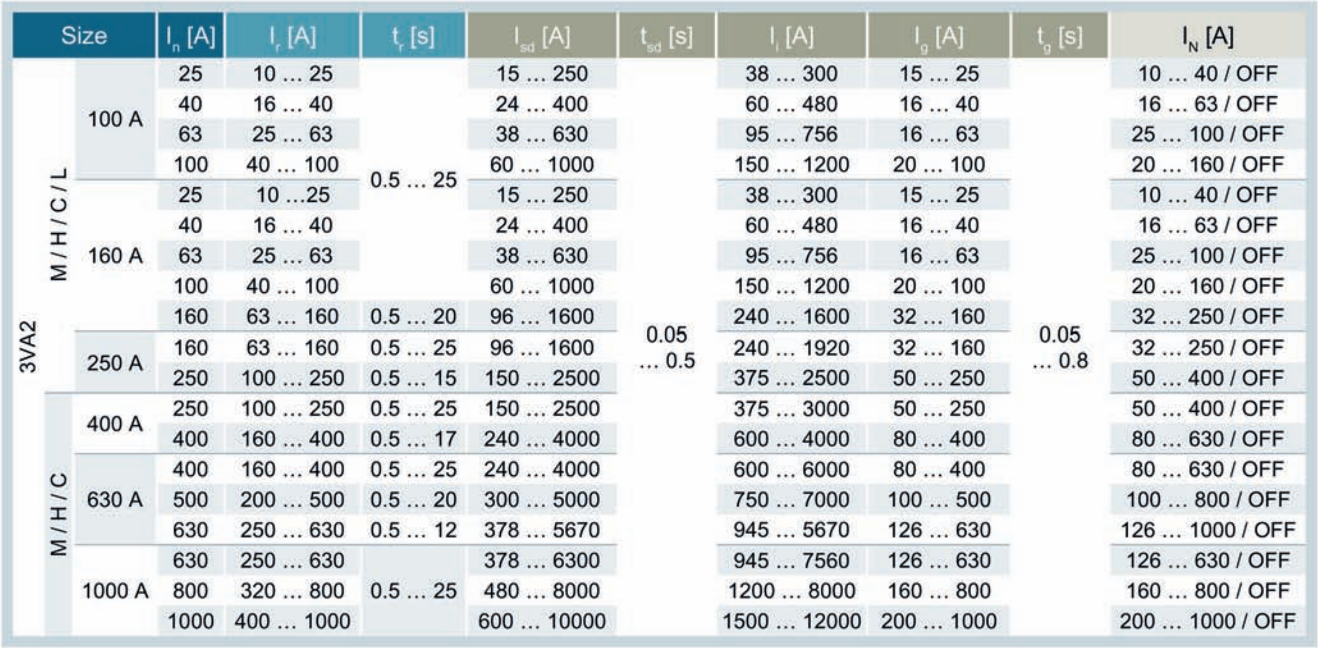

Size			I_n [A]	I_r [A]	t_r [s]	I_{sd} [A]	t_{sd} [s]	I_i [A]	I_g [A]	t_g [s]	I_N [A]
3VA2	M / H / C / L	100 A	25	10 … 25	0.5 … 25	15 … 250	0.05 … 0.5	38 … 300	15 … 25	0.05 … 0.8	10 … 40 / OFF
			40	16 … 40		24 … 400		60 … 480	16 … 40		16 … 63 / OFF
			63	25 … 63		38 … 630		95 … 756	16 … 63		25 … 100 / OFF
			100	40 … 100		60 … 1000		150 … 1200	20 … 100		20 … 160 / OFF
		160 A	25	10 …25		15 … 250		38 … 300	15 … 25		10 … 40 / OFF
			40	16 … 40		24 … 400		60 … 480	16 … 40		16 … 63 / OFF
			63	25 … 63		38 … 630		95 … 756	16 … 63		25 … 100 / OFF
			100	40 … 100		60 … 1000		150 … 1200	20 … 100		20 … 160 / OFF
			160	63 … 160	0.5 … 20	96 … 1600		240 … 1600	32 … 160		32 … 250 / OFF
		250 A	160	63 … 160	0.5 … 25	96 … 1600		240 … 1920	32 … 160		32 … 250 / OFF
			250	100 … 250	0.5 … 15	150 … 2500		375 … 2500	50 … 250		50 … 400 / OFF
	M / H / C	400 A	250	100 … 250	0.5 … 25	150 … 2500		375 … 3000	50 … 250		50 … 400 / OFF
			400	160 … 400	0.5 … 17	240 … 4000		600 … 4000	80 … 400		80 … 630 / OFF
		630 A	400	160 … 400	0.5 … 25	240 … 4000		600 … 6000	80 … 400		80 … 630 / OFF
			500	200 … 500	0.5 … 20	300 … 5000		750 … 7000	100 … 500		100 … 800 / OFF
			630	250 … 630	0.5 … 12	378 … 5670		945 … 5670	126 … 630		126 … 1000 / OFF
		1000 A	630	250 … 630	0.5 … 25	378 … 6300		945 … 7560	126 … 630		126 … 630 / OFF
			800	320 … 800		480 … 8000		1200 … 8000	160 … 800		160 … 800 / OFF
			1000	400 … 1000		600 … 10000		1500 … 12000	200 … 1000		200 … 1000 / OFF

Overload protection L:

- I_r Adjustable from 0.4 to 1.0 x I_n in absolute current values
  $I_r < 50$ A: in steps of 0.5 A
  $I_r \geq 50$ A: in steps of 1 A
- t_r Adjustable from 0.5 to 12 / 15 / 17 / 20 / 25 s (dependent on rated operational current and frame size)
  with a reference point of 6 x I_r.
  In steps of 0.1 s

The ETU560 LSIG and ETU860 LSIG units have a thermal memory which can be deactivated.

Short-time delayed short-circuit protection S:

- I_{sd} Adjustable from 0.6 to 9 / 10 x I_n
  $I_{sd} < 50$ A: in steps of 0.5 A
  $I_{sd} \geq 50$ A: in steps of 1 A
- t_{sd} Adjustable from 0.05 to 0.5 s
  with a reference point of $I_{sd} = 8 \times I_r$
  in steps of 0.01 s

The curve shape I^2t = constant can be deactivated.

Instantaneous short-circuit protection I:

- I_i Sizes 100 A to 400 A:
  adjustable from 1.5 to 10 / 12 x I_n
  Size 630 A:
  See tables above
  in steps of 1 A

Ground-fault protection G:

The detection of the ground-fault current is based on a vectorial summation of the phase currents and the neutral conductor current for 4-pole or 3-pole circuit breakers with an external current transformer for the neutral conductor.

- I_g Adjustable from 0.2 / 0.25 / 0.4 / 0.6 to 1.0 x I_n
  in steps of 1 A
- t_g Adjustable from 0.05 to 0.8 s
  with a reference point of 2 x I_g
  In steps of 0.01 s

An alarm threshold I_{gA} between 0.2 to 1 x I_n can also be set. in steps of 1 A

The current-dependent curve shape I^2t = constant can be deactivated.

The ground-fault protection function G can be deactivated.

Neutral conductor protection N:

The neutral conductor protection function is available only for 3-pole molded case circuit breakers with external current transformer for N conductor for 4-pole molded case circuit breakers.

- I_N Adjustable in steps of 1 A

  3-pole breakers with external current transformer for N conductor:
  $I_n < 63$ A: 0.4 to 1.6 x I_n

  $I_n \geq 63$ A: 0.2 to 1.6 I_n

  4-pole breakers:
  $I_n < 63$ A: 0.4 to 1.6 x I_n

  $I_n \geq 63$ A: 0.2 to 1.0 or 1.6 x I_n

3.2.2 Overview of 3VA molded case circuit breakers in line protection applications

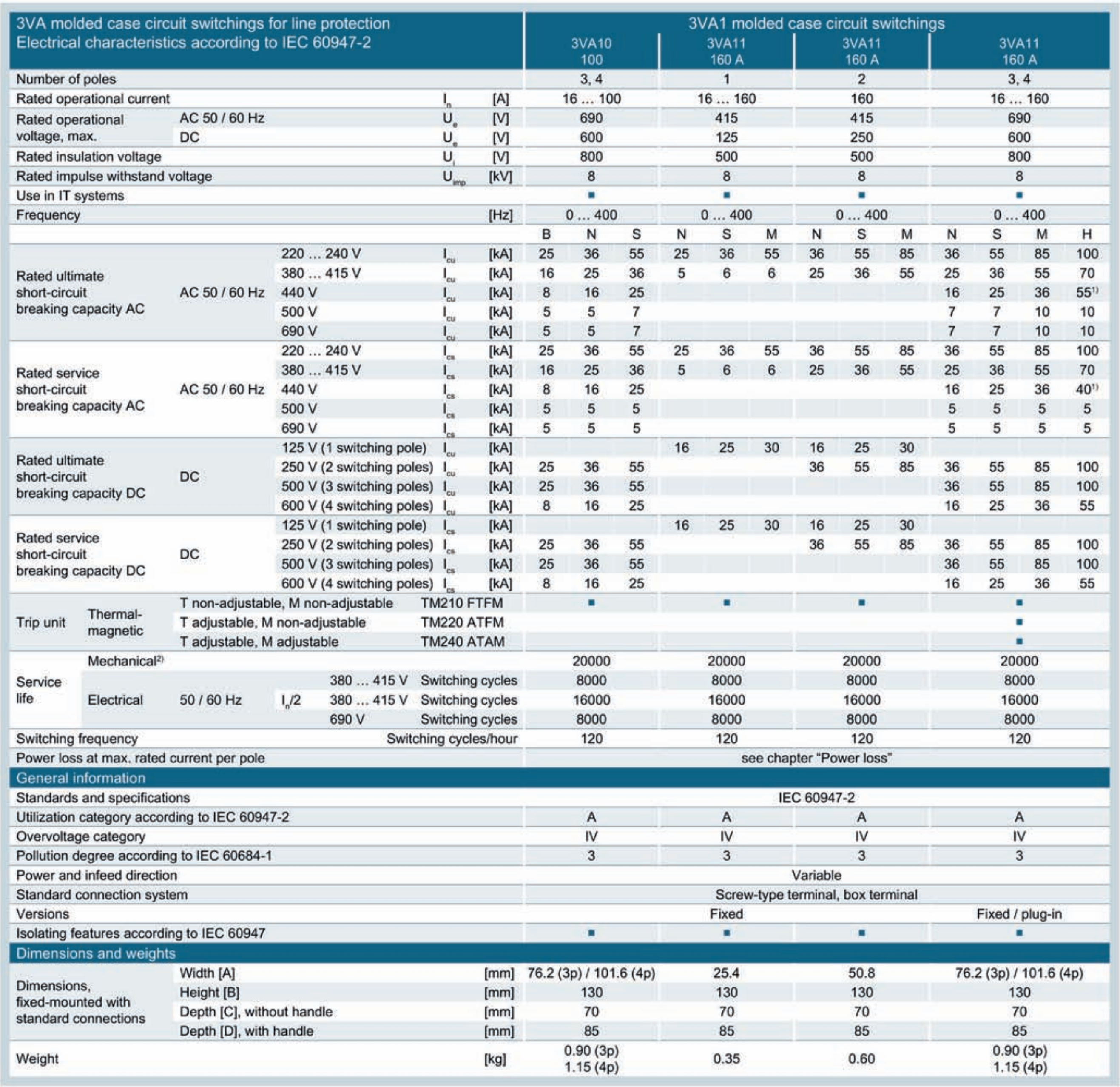

3VA molded case circuit switchings for line protection Electrical characteristics according to IEC 60947-2					3VA1 molded case circuit switchings												
					3VA10 100			3VA11 160 A			3VA11 160 A			3VA11 160 A			
Number of poles					3, 4			1			2			3, 4			
Rated operational current			I_n	[A]	16 … 100			16 … 160			160			16 … 160			
Rated operational voltage, max.	AC 50 / 60 Hz		U_e	[V]	690			415			415			690			
	DC		U_e	[V]	600			125			250			600			
Rated insulation voltage			U_i	[V]	800			500			500			800			
Rated impulse withstand voltage			U_{imp}	[kV]	8			8			8			8			
Use in IT systems					■			■			■			■			
Frequency				[Hz]	0 … 400			0 … 400			0 … 400			0 … 400			
					B	N	S	N	S	M	N	S	M	N	S	M	H
Rated ultimate short-circuit breaking capacity AC	AC 50 / 60 Hz	220 … 240 V	I_{cu}	[kA]	25	36	55	25	36	55	36	55	85	36	55	85	100
		380 … 415 V	I_{cu}	[kA]	16	25	36	5	6	6	25	36	55	25	36	55	70
		440 V	I_{cu}	[kA]	8	16	25							16	25	36	55[1]
		500 V	I_{cu}	[kA]	5	5	7							7	7	10	10
		690 V	I_{cu}	[kA]	5	5	7							7	7	10	10
Rated service short-circuit breaking capacity AC	AC 50 / 60 Hz	220 … 240 V	I_{cs}	[kA]	25	36	55	25	36	55	36	55	85	36	55	85	100
		380 … 415 V	I_{cs}	[kA]	16	25	36	5	6	6	25	36	55	25	36	55	70
		440 V	I_{cs}	[kA]	8	16	25							16	25	36	40[1]
		500 V	I_{cs}	[kA]	5	5	5							5	5	5	5
		690 V	I_{cs}	[kA]	5	5	5							5	5	5	5
Rated ultimate short-circuit breaking capacity DC	DC	125 V (1 switching pole)	I_{cu}	[kA]				16	25	30	16	25	30				
		250 V (2 switching poles)	I_{cu}	[kA]	25	36	55				36	55	85	36	55	85	100
		500 V (3 switching poles)	I_{cu}	[kA]	25	36	55							36	55	85	100
		600 V (4 switching poles)	I_{cu}	[kA]	8	16	25							16	25	36	55
Rated service short-circuit breaking capacity DC	DC	125 V (1 switching pole)	I_{cs}	[kA]				16	25	30	16	25	30				
		250 V (2 switching poles)	I_{cs}	[kA]	25	36	55				36	55	85	36	55	85	100
		500 V (3 switching poles)	I_{cs}	[kA]	25	36	55							36	55	85	100
		600 V (4 switching poles)	I_{cs}	[kA]	8	16	25							16	25	36	55
Trip unit	Thermal-magnetic	T non-adjustable, M non-adjustable		TM210 FTFM	■			■			■			■			
		T adjustable, M non-adjustable		TM220 ATFM										■			
		T adjustable, M adjustable		TM240 ATAM										■			
Service life	Mechanical[2]				20000			20000			20000			20000			
	Electrical	50 / 60 Hz 380 … 415 V		Switching cycles	8000			8000			8000			8000			
		380 … 415 V	$I_n/2$	Switching cycles	16000			16000			16000			16000			
		690 V		Switching cycles	8000			8000			8000			8000			
Switching frequency				Switching cycles/hour	120			120			120			120			
Power loss at max. rated current per pole					see chapter "Power loss"												
General information																	
Standards and specifications					IEC 60947-2												
Utilization category according to IEC 60947-2					A			A			A			A			
Overvoltage category					IV			IV			IV			IV			
Pollution degree according to IEC 60684-1					3			3			3			3			
Power and infeed direction					Variable												
Standard connection system					Screw-type terminal, box terminal												
Versions					Fixed									Fixed / plug-in			
Isolating features according to IEC 60947					■			■			■			■			
Dimensions and weights																	
Dimensions, fixed-mounted with standard connections	Width [A]			[mm]	76.2 (3p) / 101.6 (4p)			25.4			50.8			76.2 (3p) / 101.6 (4p)			
	Height [B]			[mm]	130			130			130			130			
	Depth [C], without handle			[mm]	70			70			70			70			
	Depth [D], with handle			[mm]	85			85			85			85			
Weight				[kg]	0.90 (3p) 1.15 (4p)			0.35			0.60			0.90 (3p) 1.15 (4p)			

[1] I_n 125 A, 160 A: I_{cu} / I_{cs} = 36 kA / 36 kA

[2] Operating cycles C - O

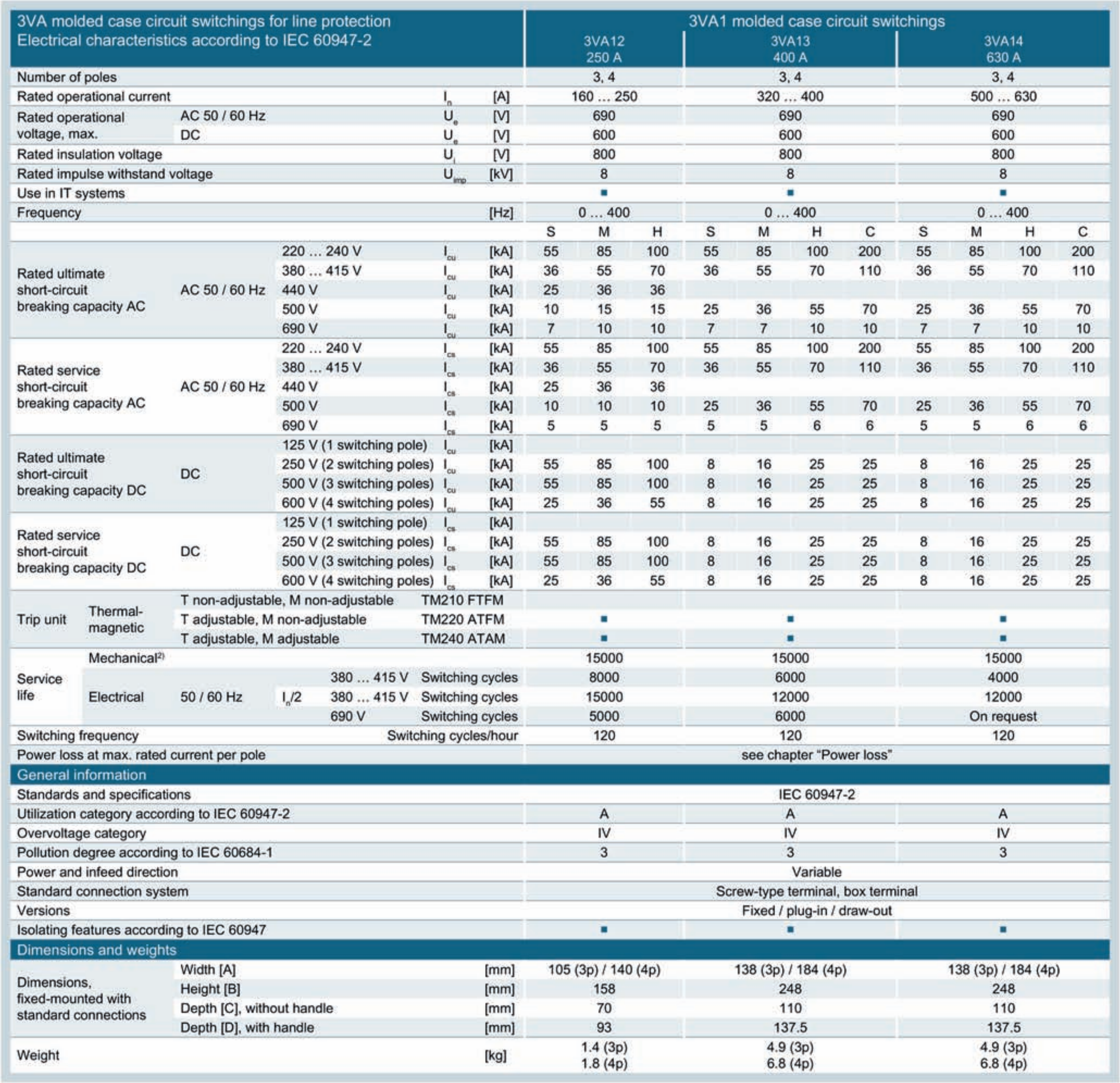

3VA molded case circuit switchings for line protection Electrical characteristics according to IEC 60947-2					3VA1 molded case circuit switchings										
					3VA12 250 A			3VA13 400 A				3VA14 630 A			
Number of poles					3, 4			3, 4				3, 4			
Rated operational current			I_n	[A]	160 … 250			320 … 400				500 … 630			
Rated operational voltage, max.	AC 50 / 60 Hz		U_e	[V]	690			690				690			
	DC		U_e	[V]	600			600				600			
Rated insulation voltage			U_i	[V]	800			800				800			
Rated impulse withstand voltage			U_{imp}	[kV]	8			8				8			
Use in IT systems					■			■				■			
Frequency				[Hz]	0 … 400			0 … 400				0 … 400			
					S	M	H	S	M	H	C	S	M	H	C
Rated ultimate short-circuit breaking capacity AC	AC 50 / 60 Hz	220 … 240 V	I_{cu}	[kA]	55	85	100	55	85	100	200	55	85	100	200
		380 … 415 V	I_{cu}	[kA]	36	55	70	36	55	70	110	36	55	70	110
		440 V	I_{cu}	[kA]	25	36	36								
		500 V	I_{cu}	[kA]	10	15	15	25	36	55	70	25	36	55	70
		690 V	I_{cu}	[kA]	7	10	10	7	7	10	10	7	7	10	10
Rated service short-circuit breaking capacity AC	AC 50 / 60 Hz	220 … 240 V	I_{cs}	[kA]	55	85	100	55	85	100	200	55	85	100	200
		380 … 415 V	I_{cs}	[kA]	36	55	70	36	55	70	110	36	55	70	110
		440 V	I_{cs}	[kA]	25	36	36								
		500 V	I_{cs}	[kA]	10	10	10	25	36	55	70	25	36	55	70
		690 V	I_{cs}	[kA]	5	5	5	5	5	6	6	5	5	6	6
Rated ultimate short-circuit breaking capacity DC	DC	125 V (1 switching pole)	I_{cu}	[kA]											
		250 V (2 switching poles)	I_{cu}	[kA]	55	85	100	8	16	25	25	8	16	25	25
		500 V (3 switching poles)	I_{cu}	[kA]	55	85	100	8	16	25	25	8	16	25	25
		600 V (4 switching poles)	I_{cu}	[kA]	25	36	55	8	16	25	25	8	16	25	25
Rated service short-circuit breaking capacity DC	DC	125 V (1 switching pole)	I_{cs}	[kA]											
		250 V (2 switching poles)	I_{cs}	[kA]	55	85	100	8	16	25	25	8	16	25	25
		500 V (3 switching poles)	I_{cs}	[kA]	55	85	100	8	16	25	25	8	16	25	25
		600 V (4 switching poles)	I_{cs}	[kA]	25	36	55	8	16	25	25	8	16	25	25
Trip unit	Thermal-magnetic	T non-adjustable, M non-adjustable	TM210 FTFM												
		T adjustable, M non-adjustable	TM220 ATFM		■			■				■			
		T adjustable, M adjustable	TM240 ATAM		■			■				■			
Service life	Mechanical[2]				15000			15000				15000			
	Electrical 50 / 60 Hz	380 … 415 V	Switching cycles		8000			6000				4000			
		$I_n/2$ 380 … 415 V	Switching cycles		15000			12000				12000			
		690 V	Switching cycles		5000			6000				On request			
Switching frequency			Switching cycles/hour		120			120				120			
Power loss at max. rated current per pole					see chapter "Power loss"										
General information															
Standards and specifications					IEC 60947-2										
Utilization category according to IEC 60947-2					A			A				A			
Overvoltage category					IV			IV				IV			
Pollution degree according to IEC 60684-1					3			3				3			
Power and infeed direction					Variable										
Standard connection system					Screw-type terminal, box terminal										
Versions					Fixed / plug-in / draw-out										
Isolating features according to IEC 60947					■			■				■			
Dimensions and weights															
Dimensions, fixed-mounted with standard connections	Width [A]			[mm]	105 (3p) / 140 (4p)			138 (3p) / 184 (4p)				138 (3p) / 184 (4p)			
	Height [B]			[mm]	158			248				248			
	Depth [C], without handle			[mm]	70			110				110			
	Depth [D], with handle			[mm]	93			137.5				137.5			
Weight				[kg]	1.4 (3p) 1.8 (4p)			4.9 (3p) 6.8 (4p)				4.9 (3p) 6.8 (4p)			

---

1) I_n 125 A, 160 A: I_{cu} / I_{cs} = 36 kA / 36 kA

2) Operating cycles C - O

For the rated ultimate short-circuit breaking capacity and rated service short-circuit breaking capacity with direct current, see chapter DC network applications of 3VA molded case circuit breakers (Page 172) .

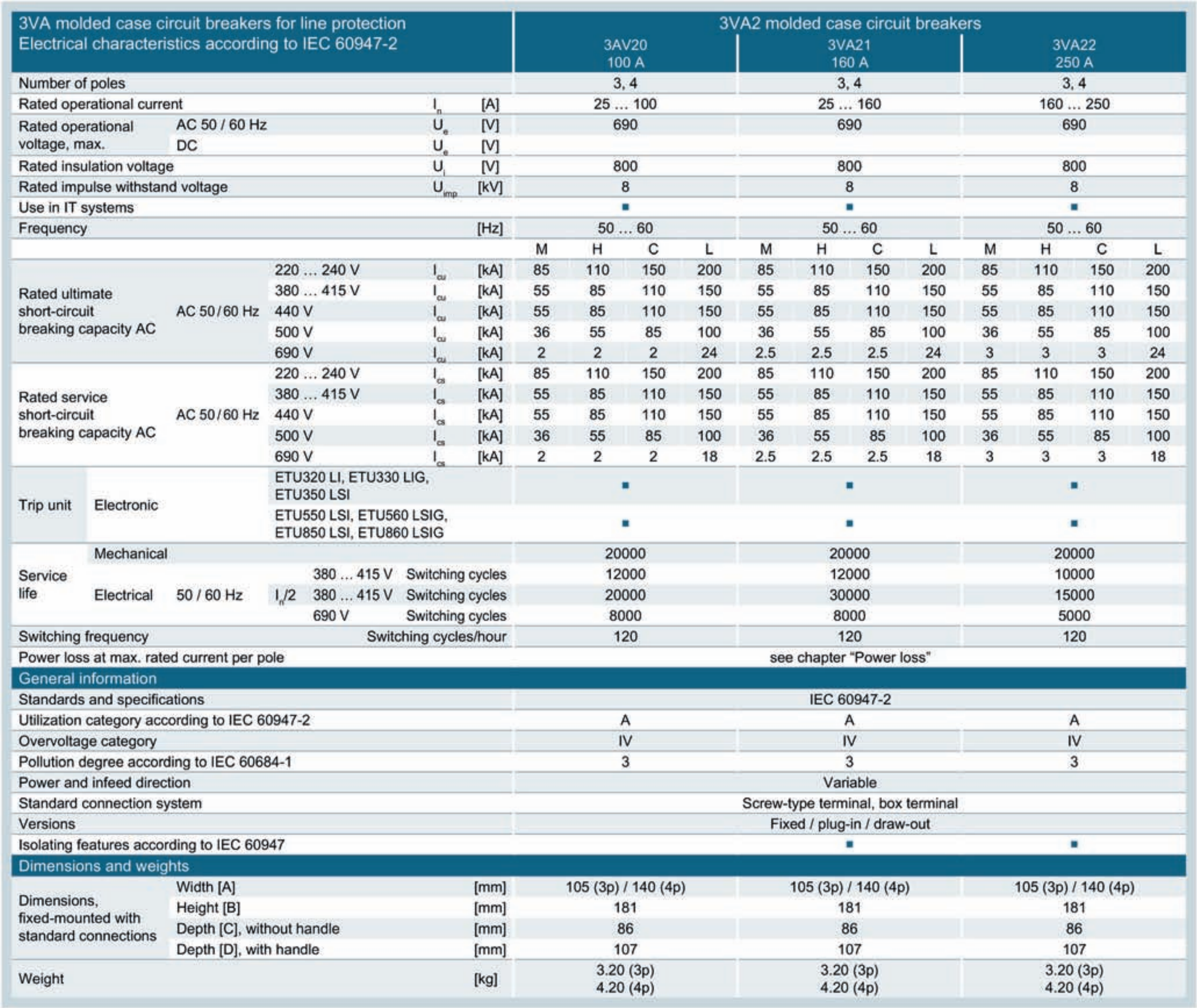

3VA molded case circuit breakers for line protection Electrical characteristics according to IEC 60947-2					3VA2 molded case circuit breakers											
					3AV20 100 A				3VA21 160 A				3VA22 250 A			
Number of poles					3, 4				3, 4				3, 4			
Rated operational current			I_n	[A]	25 … 100				25 … 160				160 … 250			
Rated operational voltage, max.	AC 50 / 60 Hz		U_e	[V]	690				690				690			
	DC		U_e	[V]												
Rated insulation voltage			U_i	[V]	800				800				800			
Rated impulse withstand voltage			U_{imp}	[kV]	8				8				8			
Use in IT systems					■				■				■			
Frequency				[Hz]	50 … 60				50 … 60				50 … 60			
					M	H	C	L	M	H	C	L	M	H	C	L
Rated ultimate short-circuit breaking capacity AC	AC 50/60 Hz	220 … 240 V	I_{cu}	[kA]	85	110	150	200	85	110	150	200	85	110	150	200
		380 … 415 V	I_{cu}	[kA]	55	85	110	150	55	85	110	150	55	85	110	150
		440 V	I_{cu}	[kA]	55	85	110	150	55	85	110	150	55	85	110	150
		500 V	I_{cu}	[kA]	36	55	85	100	36	55	85	100	36	55	85	100
		690 V	I_{cu}	[kA]	2	2	2	24	2.5	2.5	2.5	24	3	3	3	24
Rated service short-circuit breaking capacity AC	AC 50/60 Hz	220 … 240 V	I_{cs}	[kA]	85	110	150	200	85	110	150	200	85	110	150	200
		380 … 415 V	I_{cs}	[kA]	55	85	110	150	55	85	110	150	55	85	110	150
		440 V	I_{cs}	[kA]	55	85	110	150	55	85	110	150	55	85	110	150
		500 V	I_{cs}	[kA]	36	55	85	100	36	55	85	100	36	55	85	100
		690 V	I_{cs}	[kA]	2	2	2	18	2.5	2.5	2.5	18	3	3	3	18
Trip unit	Electronic	ETU320 LI, ETU330 LIG, ETU350 LSI			■				■				■			
		ETU550 LSI, ETU560 LSIG, ETU850 LSI, ETU860 LSIG			■				■				■			
Service life	Mechanical				20000				20000				20000			
	Electrical	50 / 60 Hz 380 … 415 V		Switching cycles	12000				12000				10000			
		I_n/2 380 … 415 V		Switching cycles	20000				30000				15000			
		690 V		Switching cycles	8000				8000				5000			
Switching frequency				Switching cycles/hour	120				120				120			
Power loss at max. rated current per pole					see chapter "Power loss"											
General information																
Standards and specifications					IEC 60947-2											
Utilization category according to IEC 60947-2					A				A				A			
Overvoltage category					IV				IV				IV			
Pollution degree according to IEC 60684-1					3				3				3			
Power and infeed direction					Variable											
Standard connection system					Screw-type terminal, box terminal											
Versions					Fixed / plug-in / draw-out											
Isolating features according to IEC 60947									■				■			
Dimensions and weights																
Dimensions, fixed-mounted with standard connections	Width [A]			[mm]	105 (3p) / 140 (4p)				105 (3p) / 140 (4p)				105 (3p) / 140 (4p)			
	Height [B]			[mm]	181				181				181			
	Depth [C], without handle			[mm]	86				86				86			
	Depth [D], with handle			[mm]	107				107				107			
Weight				[kg]	3.20 (3p) 4.20 (4p)				3.20 (3p) 4.20 (4p)				3.20 (3p) 4.20 (4p)			

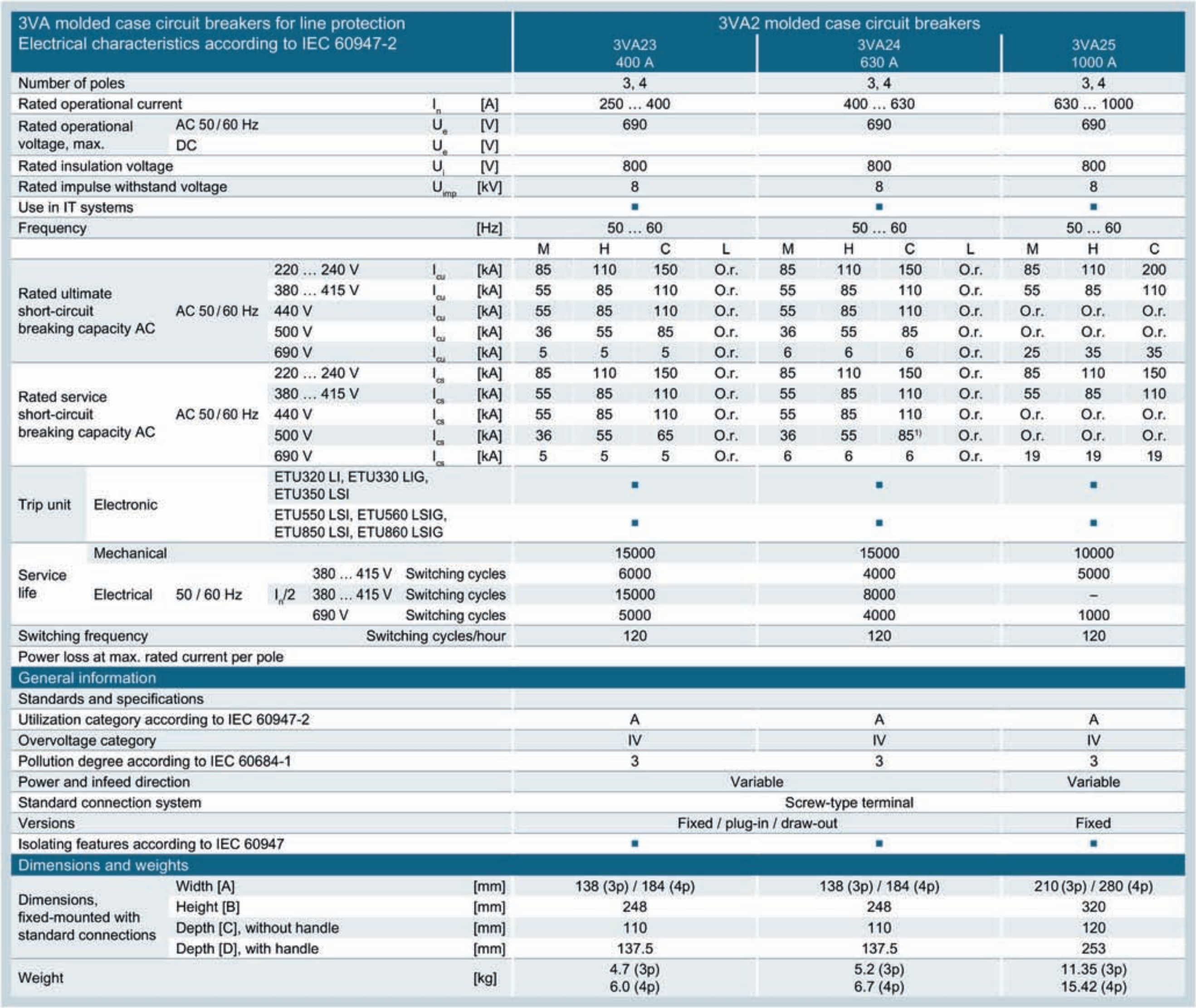

3VA molded case circuit breakers for line protection Electrical characteristics according to IEC 60947-2					3VA2 molded case circuit breakers										
					3VA23 400 A				3VA24 630 A				3VA25 1000 A		
Number of poles					3, 4				3, 4				3, 4		
Rated operational current			I_n	[A]	250 … 400				400 … 630				630 … 1000		
Rated operational voltage, max.	AC 50/60 Hz		U_e	[V]	690				690				690		
	DC		U_e	[V]											
Rated insulation voltage			U_i	[V]	800				800				800		
Rated impulse withstand voltage			U_{imp}	[kV]	8				8				8		
Use in IT systems					■				■				■		
Frequency				[Hz]	50 … 60				50 … 60				50 … 60		
					M	H	C	L	M	H	C	L	M	H	C
Rated ultimate short-circuit breaking capacity AC	AC 50/60 Hz	220 … 240 V	I_{cu}	[kA]	85	110	150	O.r.	85	110	150	O.r.	85	110	200
		380 … 415 V	I_{cu}	[kA]	55	85	110	O.r.	55	85	110	O.r.	55	85	110
		440 V	I_{cu}	[kA]	55	85	110	O.r.	55	85	110	O.r.	O.r.	O.r.	O.r.
		500 V	I_{cu}	[kA]	36	55	85	O.r.	36	55	85	O.r.	O.r.	O.r.	O.r.
		690 V	I_{cu}	[kA]	5	5	5	O.r.	6	6	6	O.r.	25	35	35
Rated service short-circuit breaking capacity AC	AC 50/60 Hz	220 … 240 V	I_{cs}	[kA]	85	110	150	O.r.	85	110	150	O.r.	85	110	150
		380 … 415 V	I_{cs}	[kA]	55	85	110	O.r.	55	85	110	O.r.	55	85	110
		440 V	I_{cs}	[kA]	55	85	110	O.r.	55	85	110	O.r.	O.r.	O.r.	O.r.
		500 V	I_{cs}	[kA]	36	55	65	O.r.	36	55	85[1]	O.r.	O.r.	O.r.	O.r.
		690 V	I_{cs}	[kA]	5	5	5	O.r.	6	6	6	O.r.	19	19	19
Trip unit	Electronic	ETU320 LI, ETU330 LIG, ETU350 LSI			■				■				■		
		ETU550 LSI, ETU560 LSIG, ETU850 LSI, ETU860 LSIG			■				■				■		
Service life	Mechanical				15000				15000				10000		
	Electrical 50 / 60 Hz	380 … 415 V		Switching cycles	6000				4000				5000		
		$I_n/2$ 380 … 415 V		Switching cycles	15000				8000				–		
		690 V		Switching cycles	5000				4000				1000		
Switching frequency				Switching cycles/hour	120				120				120		
Power loss at max. rated current per pole															
General information															
Standards and specifications															
Utilization category according to IEC 60947-2					A				A				A		
Overvoltage category					IV				IV				IV		
Pollution degree according to IEC 60684-1					3				3				3		
Power and infeed direction					Variable								Variable		
Standard connection system					Screw-type terminal										
Versions					Fixed / plug-in / draw-out								Fixed		
Isolating features according to IEC 60947					■				■				■		
Dimensions and weights															
Dimensions, fixed-mounted with standard connections	Width [A]			[mm]	138 (3p) / 184 (4p)				138 (3p) / 184 (4p)				210 (3p) / 280 (4p)		
	Height [B]			[mm]	248				248				320		
	Depth [C], without handle			[mm]	110				110				120		
	Depth [D], with handle			[mm]	137.5				137.5				253		
Weight				[kg]	4.7 (3p) 6.0 (4p)				5.2 (3p) 6.7 (4p)				11.35 (3p) 15.42 (4p)		

[1] I_n 400/500 A and I_n 630 A: I_{cs} = 65 kA

O. r. On request

3.3 Motor protection applications of 3VA molded case circuit breakers

The main applications for motor protection are:

- The 3VA molded case circuit breaker as a starter protection circuit breaker
- The 3VA2 molded case circuit breaker as a motor protection breaker

Overview of possible uses of the 3VA molded case circuit breaker for motor protection:

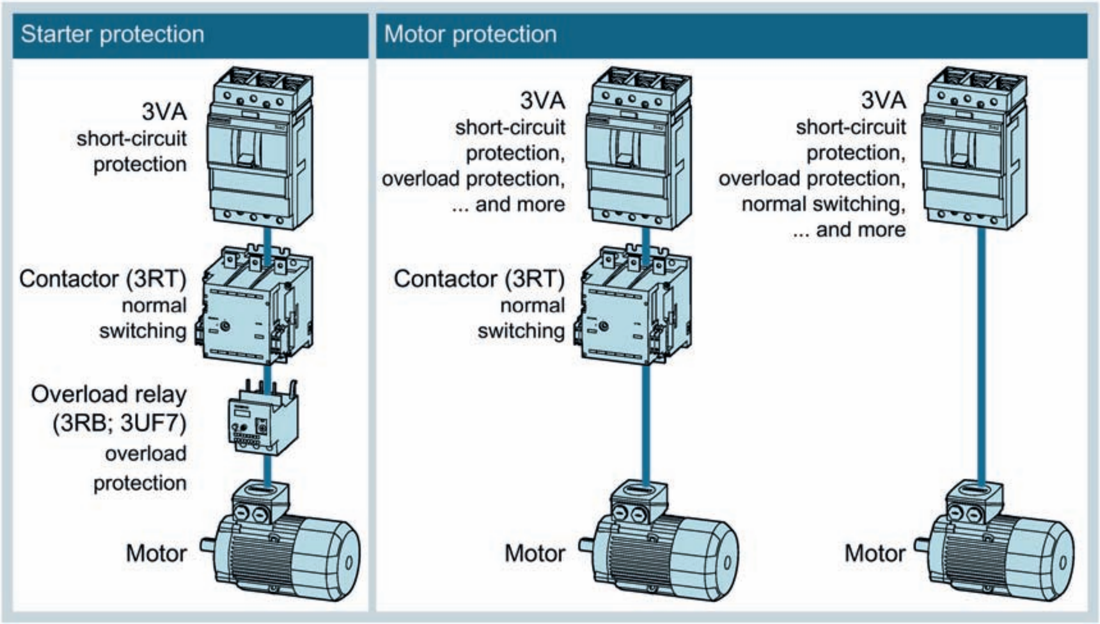

All 3VA molded case circuit breakers are suitable for use with IE3 motors and, in future, also with IE4 motors.

3.3.1 3VA molded case circuit breakers for starter protection

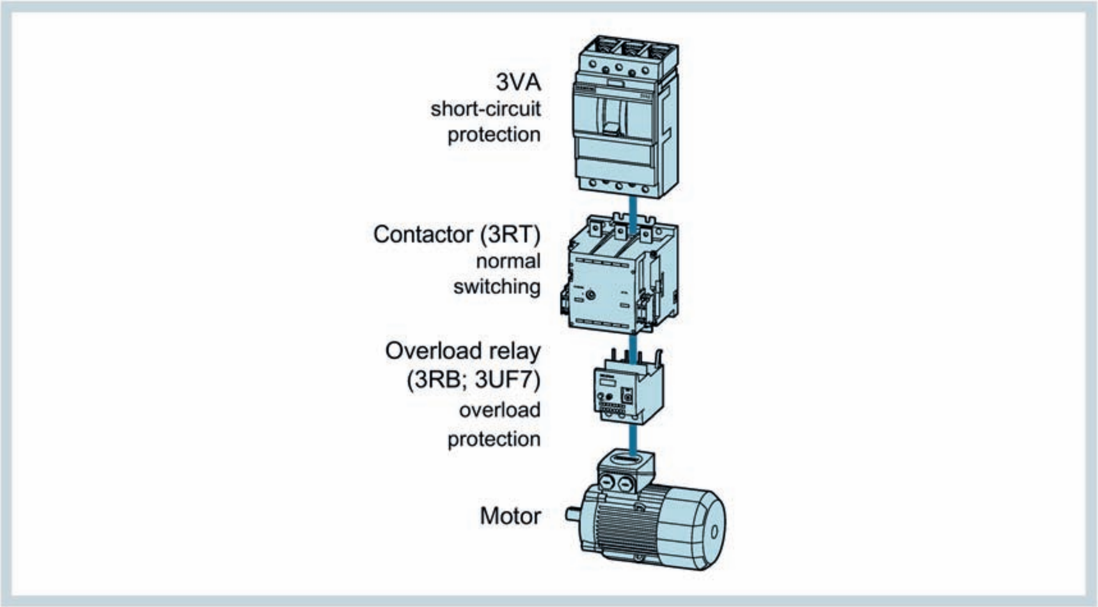

When the 3VA molded case circuit breaker is used as a starter protection circuit breaker, the 3VA only takes on the short-circuit protection function of the motor feeder. The overload protection of the motor feeder is provided by an overload relay, such as 3RB, or by a motor management device, such as SIMOCODE.

Functional switching is performed by the contactor.

Two different device ranges are available for starter protection applications:

- 3VA1 starter protection circuit breaker with a magnetic trip unit for standard motor feeders with a rated conditional short-circuit current I_q up to 100 kA
- 3VA2 starter protection circuit breaker with electronic trip unit for high-end motor feeders with a rated conditional short-circuit current I_q up to 150 kA

You will find the tested device combinations in the Siemens Industry Online Support (https://support.industry.siemens.com/cs/ww/en/view/109483387).

The short-circuit release of the TM110M magnetic trip unit is not adjustable. In this case the short-circuit release is permanently set to 16 times the rated current I_n.

Setting values of the TM110M magnetic trip unit for the 3VA1 molded case circuit breaker:

Size		I_n [A]	Fixed short-circuit release I_i [A]
3VA1	160 A	1	16
		2	32
		4	64
		8	128
		12.5	200

Setting values of the TM120M magnetic trip unit for the 3VA1 molded case circuit breaker:

Size		I_n [A]	Settings I_i = x I_n											
			5 x I_n	6 x I_n	7 x I_n	8 x I_n	9 x I_n	10 x I_n	11 x I_n	12 x I_n	13 x I_n	14 x I_n	15 x I_n	16 x I_n
3VA1	160A	20	—	—	140	160	180	200	220	240	260	280	300	320
		32	—	—	220	256	288	320	352	384	416	448	480	510
		40	—	—	280	320	360	400	440	480	520	560	600	640
		50	—	—	350	400	450	500	550	600	650	700	750	800
		63	—	—	440	504	567	630	693	756	819	882	945	1010
		80	—	—	560	640	720	800	880	960	1040	1120	1200	1280
		100	—	—	700	800	900	1000	1100	1200	1300	1400	1500	1600
		125	—	—	875	1000	1125	1250	1375	1500	1625	1750	1875	2000
	250A	160	—	—	1120	1280	1440	1600	1760	1920	2080	2240	2400	2560
		200	—	1200	1400	1600	1800	2000	2200	2400	2600	2800	—	—
	400A	250	—	—	—	2000	2250	2500	2750	3000	3250	3500	3750	4000
		320	—	—	2240	2560	2880	3200	3520	3840	4160	4480	—	—
	630A	400	—	2400	2800	3200	3600	4000	4400	4800	—	—	—	—
		500	2500	3000	3500	4000	4500	5000	—	—	—	—	—	—

Setting values of the ETU310M electronic trip unit for the 3VA2 molded case circuit breaker:

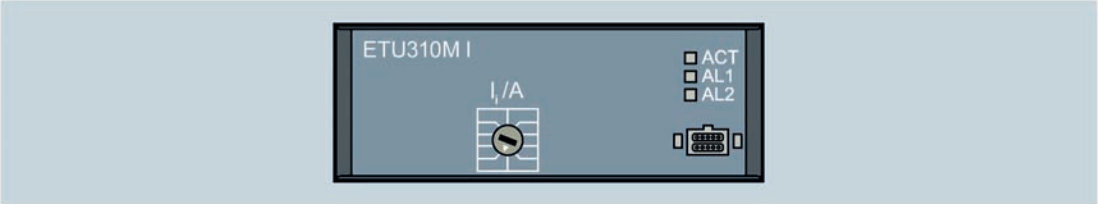

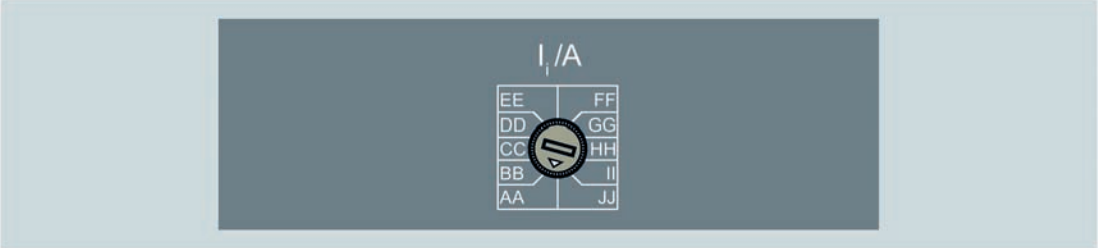

Size			I_n [A]	Settings I_i [A]									
				AA	BB	CC	DD	EE	FF	GG	HH	II	JJ
3VA2	M / C	160 A	25	75	100	125	150	200	250	300	325	350	375
			40	120	160	200	240	320	400	480	520	560	600
			63	189	252	315	378	504	630	756	819	882	945
			100	300	400	500	600	800	1000	1200	1300	1400	1500
		250 A	160	480	640	800	960	1280	1600	1920	2080	2240	2400
			200	600	800	1000	1200	1600	2000	2400	2600	2800	3000
		400 A	250	750	1000	1250	1500	2000	2500	3000	3250	3500	3750
		630 A	400	1200	1600	2000	2400	3200	4000	4800	5200	5600	6000
			500	1500	2000	2500	3000	4000	5000	6000	6500	7000	7500

3.3.2 3VA molded case circuit breakers for motor protection

The 3VA2 molded case circuit breakers for motor protection are designed for optimal protection and direct-on-line starting of three-phase squirrel-cage motors.

Possible uses

- 3VA2 motor protection circuit breaker up to 500 A, tested according to IEC EN 60947-4-1
- 3VA2 motor protection circuit breaker as motor protection combination, 3VA2 with 3RT

Overview of possible uses of the 3VA2 molded case circuit breaker for motor protection:

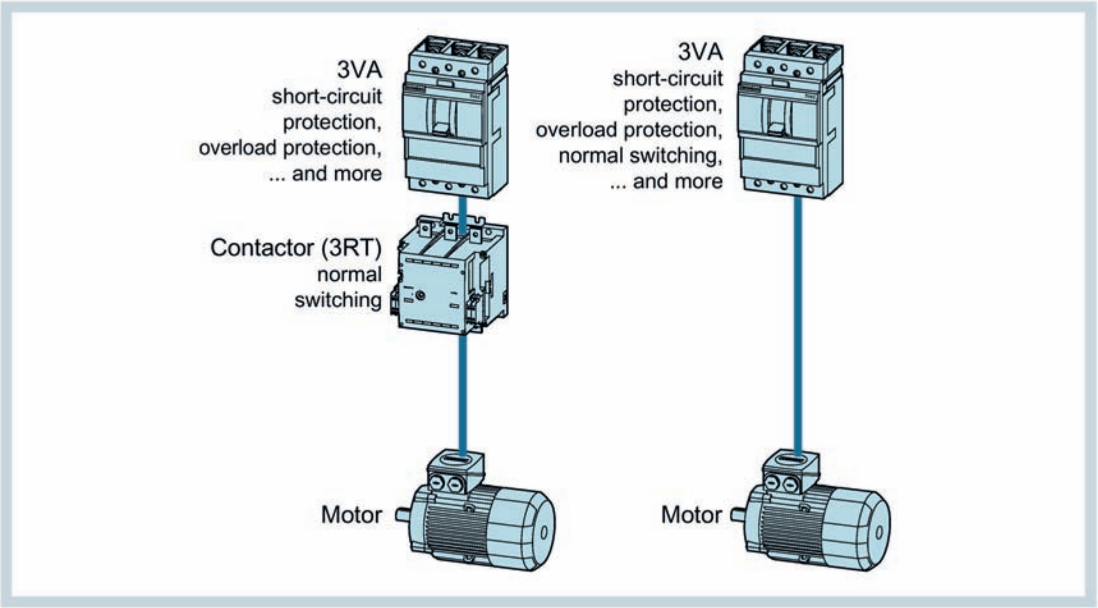

3.3.2.1 3VA2 motor protection circuit breaker up to 500 A, tested according to IEC EN 60947-4-1

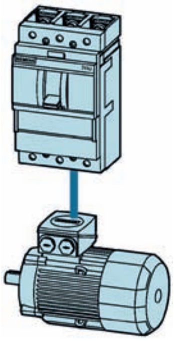

As the 3VA2 molded case circuit breakers have been tested according to standard IEC EN 60947-4-1 (as motor starters), these devices can also be used as motor protection circuit breakers without an additional contactor. In this case the 3VA2 motor protection breaker takes on the short-circuit protection and overload protection functions in addition to functional switching (ON/OFF) of the motor.

However, as functional switching of the motor according to utilization category AC-3 reduces the electrical service life of the circuit breaker, this use is only suitable for applications with a low switching frequency. The maximum adjustable rated current of the circuit breaker is also restricted by the increased AC-3 requirements.

Dependence of motor protection circuit breaker on motor size and electrical service life

Article No.	Setting range of overload release	Standard three-phase motor 4-pole at 400 V AC [1]		Elec. endurance of circuit breaker	Max. current setting of feeder (AC3)		Rated conditional short-circuit current [2]
	[A]	P [kW]	I [A]	Operating cycles (AC3)	IE2 [A]	IE3 [A]	I_q [kA]
3VA2125-.M.3	10 … 25	11	22	10000	23	23	55 / 85
3VA2140-.M.3	16 … 40	18.5	35		37	37	
3VA2163-.M.3	25 … 63	22	41		43	43	
		30	55	7500	58	58	
3VA2110-.M.3	40 … 100	37	66	5000	69	69	
		45	80		84	84	
		55	97		100	100	
3VA2216-.M.3	63 … 160	75	132	6500	139	139	
3VA2325-.M.3	100 … 250	90	160	4000	205	205	
		110	195				
3VA2440-.M.3	160 … 400	160	280	3000	295	295	
3VA2450-.M.3	200 … 500	200	350	2500	368	368	

[1] Guide value for 4-pole standard motors at 400 V AC, 50 Hz. Selection depends on the specific startup and rated data of the protected motor

[2] Rated conditional short-circuit current:

- I_q = 55 kA - circuit breaker with medium breaking capacity M
- I_q = 85 kA - circuit breaker with very high breaking capacity C

3.3.2.2 3VA2 motor protection breaker as tested motor protection combination, 3VA2 with 3RT

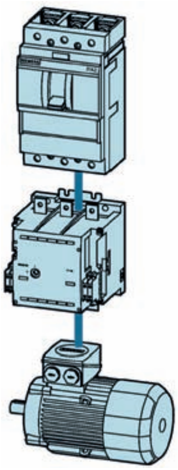

The 3VA2 motor protection circuit breakers with 3RT contactors and 3RW soft starters were tested as a motor protection combination for standard applications.

In this case, the 3VA2 molded case circuit breaker takes on the protection functions, short-circuit protection and overload protection, and the 3RT contactor or the soft starter is responsible for functional switching (ON/OFF) of the motor.

You will find the tested device combinations in the Siemens Industry Online Portal (https://support.industry.siemens.com/cs/ww/en/view/109483387).

3.3.2.3 Protection functions of 3VA2 molded case circuit breakers for motor protection

Different trip unit variants are available for the 3VA2 molded case circuit breaker. These vary according to functionality and protection functions.

Overview of the ETU versions

Protection		ETU350M	ETU550M	ETU860M
Overload (L)		■	■	■
Short-time delayed short-circuit protection (S)		■	■	■
Instantaneous short-circuit protection (I)		15 x I_n	3 … 15 x I_n	3 … 15 x I_n
Ground-fault protection (G)		—	—	■
Additional functions				
Adjustable motor current I_r		via rotary selector switches	via buttons on display in steps of 1 A	via buttons on display in steps of 1 A
Thermal memory		■	■	■
Protection against phase unbalance		40% fixed	5 … 50% (default setting: 40%)	5 … 50% (default setting: 40%)
Tripping time on phase unbalance [1]	On startup	0.7 s fixed	0.7 … 60 s (default setting: 0.7 s)	0.7 … 60 s (default setting: 0.7 s)
	In normal operation	4 s fixed	4 … 420 s (default setting: 4 s)	4 … 420 s (default setting: 4 s)
Communication option		—	—	■
Switching classes T_c		10A, 10 / 10E 20 / 20E	10A, 10 / 10E 20 / 20E, 30 / 30E	10A, 10 / 10E 20 / 20E, 30 / 30E
Integrated power measurement		—	—	■
Blocking protection / idle running protection		—	—	■

[1] Adjustable tripping times with phase unbalance in firmware version 4.3 and higher.

Thermal memory

All 3VA2 molded case circuit breakers for motor applications have a "thermal memory" which takes the pre-loading of the three-phase asynchronous motor into account. The tripping times of the inverse-time delayed overload releases are only valid for the unloaded (cold) state.

The pre-loading of the 3-phase motor must be taken into consideration in order to prevent damage to the motor, e.g. from being frequently switched on without sufficient cooling time.

Principle of operation

All 3VA2 molded case circuit breakers for motor protection have a thermal model of the motor integrated in the electronic trip unit. This reduces the response time of the molded case circuit breaker with a thermal memory such that further overloads cannot damage the motor windings. The motor is switched off within a time limit determined by the thermal pre-loading, see curve ② in the figure below (response time of the trip unit after overload trip).

An overload may also be the next inrush current of the motor.

After an overcurrent trip, the trip times are reduced according to the tripping characteristic.

A cooling time determined by the size of the motor is required before the motor can be switched on again. This prevents the motor from being thermally overloaded by a current after an overload trip.

Response time of the trip unit after overload trip:

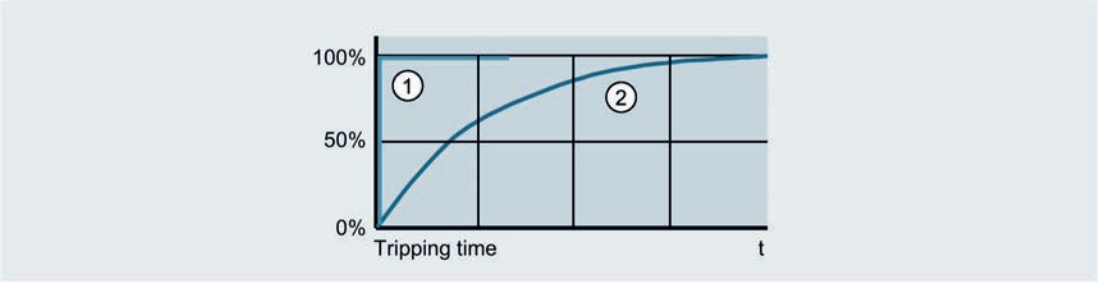

① without thermal memory
② with thermal memory

Protection against phase unbalance

All 3VA2 molded case circuit breakers for motor protection have protection against unbalanced current loading of the motor. This ensures that the motor is reliably protected against overheating if a phase failure or major fluctuation of a phase current occurs.

The phase unbalance ratio is calculated from the mean value of the three phases L1, L2 and L3 and the highest possible phase current deviating from this. If the phase unbalance ratio exceeds the set value, the circuit breaker trips according to tripping time t_{unbal}.
With ETU350M, the t_{unbal} tripping times are permanently set to 0.7 s for startup and to 4 s for continuous operation. With ETU550M and ETU860M, the t_{unbal} tripping times for startup can be set from 0.7 s to 60 s and for continuous operation from 4 s to 420 s. The lowest value is always set as a factory default.

The adjustable tripping time can be used for operation with soft starters, for 2-phase phase-angle control or DC braking with soft starters.

Calculation formulas:

$$I_{unbal} = \frac{(I_1 + I_2 + I_3)}{3} \qquad \text{Unbalance ratio} = \frac{\overset{3}{\underset{i=1}{\text{Max}}} \left| I_i - I_{unbal} \right|}{I_{unbal}}$$

I_{MW}	Mean value of the three phase currents
I_i	One phase current

With the ETU350M trip unit version, the unbalance ratio is permanently set to 40%.

With the ETU550M and ETU860M trip unit versions, the unbalance ratio can be set freely between 5% and 50%. The default setting of 40% is set at the factory.

Trip classes T_C

The trip class T_c specifies the tripping time T_p for balanced 3-pole loads, starting from the cold state, with 7.2 times the set current I_r according to IEC EN 60947 4-1. Combinations with class 10 are normally used.

The trip classes with "E" indicate a narrower tolerance band of tripping time T_p. These trip classes can also be implemented with the precise electronic trip units of the 3VA2 motor protection circuit breakers.

Trip classes of overload protection devices according to IEC 60947-4-1:

CLASS	Tripping time[1]
5	0,5 s < T_p < 5 s
10A	2 s < T_p < 10 s
10	4 s < T_p < 10 s
10E	5 s < T_p < 10 s
20	6 s < T_p < 20 s
20E	10 s < T_p < 20 s
30	9 s < T_p < 30 s
30E	20 s < T_p < 30 s

[1] The overload protection device must trip within these times.

Tripping characteristic for 3-pole symmetrical load:

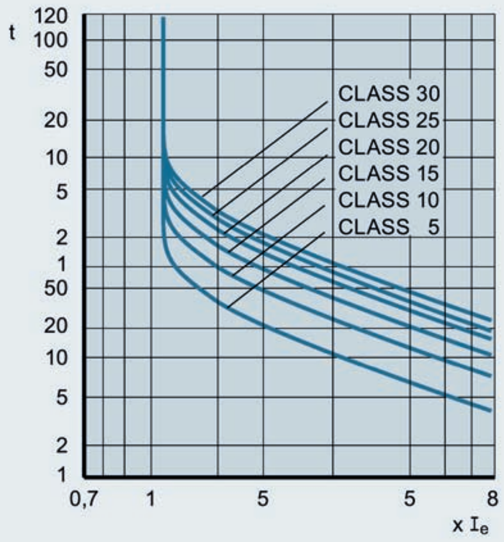

Blocking protection

The 3VA2 molded case circuit breakers with the ETU860M motor protection trip unit now have blocking protection integrated in the circuit breaker for the first time.

If the motor is blocked (or if it falls short of the breakdown torque), a high motor current - almost as high as the starting current but still not as high as a short-circuit current - is generated. Without blocking protection, it can take up to 30 s or even longer (depending on the current and T_P settings) for the molded case circuit breaker to trip. This results in unnecessary thermal stress.

Blocking protection is automatically deactivated during startup until the motor reaches operating speed (t_{start}).
t_{start} is equal to t_b.

Typical application examples for this include:

- Rock crushers (rock too large or too hard)
- Conveyor belts (transported goods jammed)

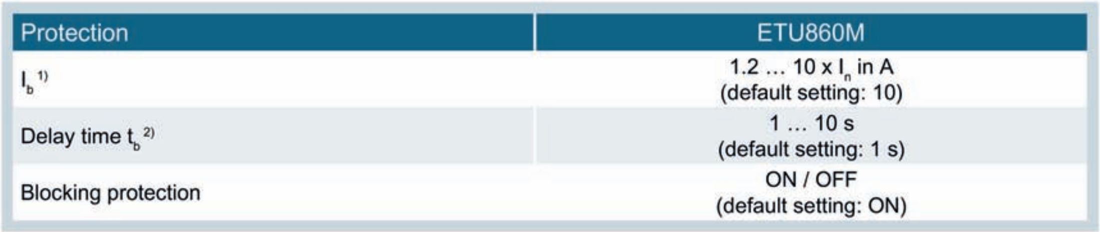

Protection	ETU860M
I_b 1)	1.2 … 10 x I_n in A (default setting: 10)
Delay time t_b 2)	1 … 10 s (default setting: 1 s)
Blocking protection	ON / OFF (default setting: ON)

1) Adjustable I_b over 0.4 in firmware version 4.3 and higher

2) Adjustable t_b over 0.5 s in firmware version 4.3 and higher

Idle running protection

The 3VA2 molded case circuit breakers with the ETU860M motor protection trip unit now have idle running protection integrated in the circuit breaker for the first time.

When the load on the motor is removed, e.g. when the drive chain or drive belt snaps, the current falls below the normal motor operational current. The integrated idle running protection detects this condition, trips and thus shuts down the application.

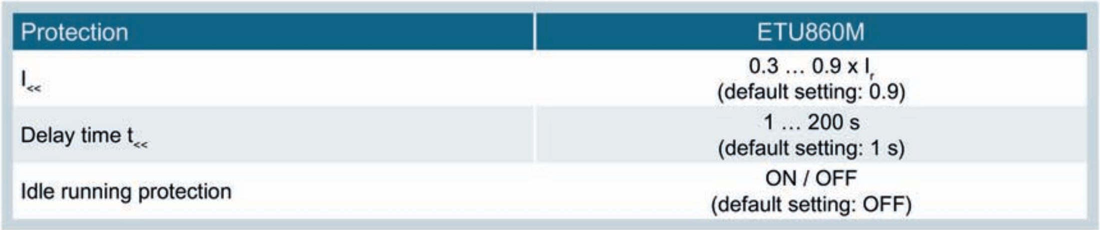

Protection	ETU860M
$I_{<<}$	0.3 … 0.9 x I_r (default setting: 0.9)
Delay time $t_{<<}$	1 … 200 s (default setting: 1 s)
Idle running protection	ON / OFF (default setting: OFF)

3.3.3 ETU350M electronic trip unit

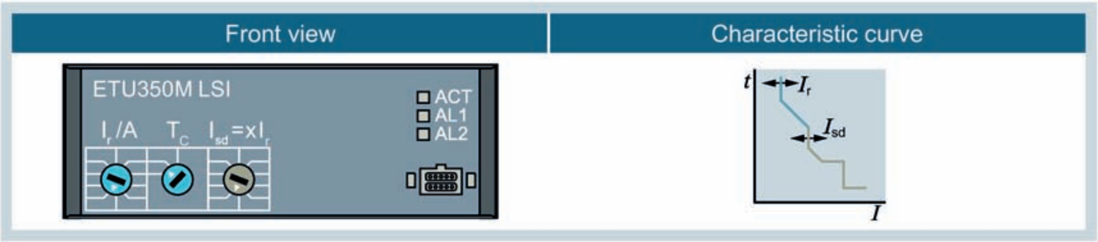

Motor protection - function LSI

The ETU350M electronic trip unit features:

- Adjustable parameter setting I_r for overload protection (L)
- Adjustable parameter setting I_{sd} for short-time delayed short circuit protection (S)
- Fixed parameter setting t_{sd} for short-time delayed short circuit protection (S), t_{sd} = 0.03 s
- Fixed parameter setting I_i for short-circuit protection (I), $I_i = 15 \times I_r$
- Adjustable parameter setting T_c for the trip class
- Fixed parameter setting for phase unbalance of 40%
- Permanently active thermal memory, cannot be deactivated

ETU350M parameters

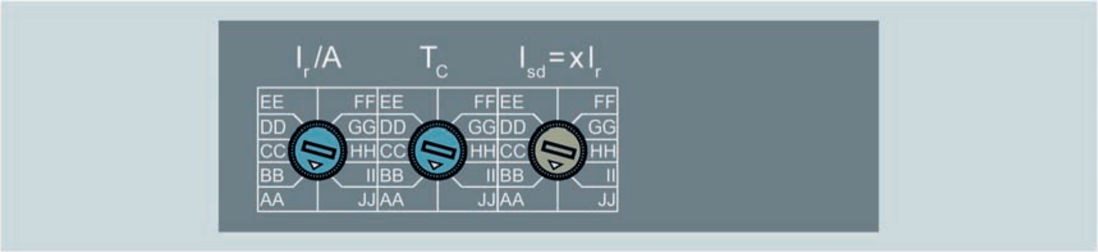

Setting values for I_r

Size			I_n [A]	Settings I_r [A]									
				AA	BB	CC	DD	EE	FF	GG	HH	II	JJ
3VA2	M / C	160 A	25	10	12	14	16	18	20	22	23	24	25
			40	16	20	24	28	30	32	34	36	38	40
			63	25	30	35	40	45	50	54	57	60	63
			100	40	50	63	70	75	80	85	90	95	100
		250 A	160	63	80	95	110	125	140	145	150	155	160
			200	80	100	120	140	150	160	170	180	190	200
		400 A	250	100	125	150	175	200	210	220	230	240	250
		630 A	400	160	200	240	280	300	320	340	360	380	400
			500	200	250	300	350	375	400	425	450	475	500
		1000 A	630	250	315	400	450	500	525	550	575	600	630
			800	320	400	500	550	600	630	680	720	760	800

Setting values for T_c

Size			I_n [A]	Settings Trip class T_c									
				AA	BB	CC	DD	EE	FF	GG	HH	II	JJ
3VA2	M / C	160 A	25	10A	10A	10A	10A	10E	10E	20E	20E	20E	20E
			40	10A	10A	10A	10A	10E	10E	20E	20E	20E	20E
			63	10A	10A	10A	10A	10E	10E	20E	20E	20E	20E
			100	10A	10A	10A	10A	10E	10E	20E	20E	20E	20E
		250 A	160	10A	10A	10A	10A	10E	10E	20E	20E	20E	20E
			200	10A	10A	10A	10A	10E	10E	20E	20E	20E	20E
		400 A	250	10A	10A	10A	10A	10E	10E	20E	20E	20E	20E
		630 A	400	10A	10A	10A	10A	10E	10E	20E	20E	20E	20E
			500	10A	10A	10A	10A	10E	10E	20E	20E	20E	20E
		1000 A	630	10A	10A	10A	10A	10E	10E	20E	20E	20E	20E
			800	10A	10A	10A	10A	10E	10E	20E	20E	20E	20E

Setting values for I_{sd}

Size			I_n [A]	Settings $I_{sd} = x\ I_r$									
				AA	BB	CC	DD	EE	FF	GG	HH	II	JJ
3VA2	M / C	160 A	25	3	4	5	6	8	10	12	13	14	15
			40	3	4	5	6	8	10	12	13	14	15
			63	3	4	5	6	8	10	12	13	14	15
			100	3	4	5	6	8	10	12	13	14	15
		250 A	160	3	4	5	6	8	10	12	13	14	15
			200	3	4	5	6	8	10	12	13	14	15
		400 A	250	3	4	5	6	8	10	12	13	14	15
		630 A	400	3	4	5	6	8	10	12	13	14	15
			500	3	4	5	6	8	10	12	13	14	15
		1000 A	630	3	4	5	6	8	10	12	13	14	15
			800	3	4	5	6	7	8	9	10	11	12

Instantaneous short-circuit protection I_i

Short-circuit protection I_i is permanently set to the highest possible value.

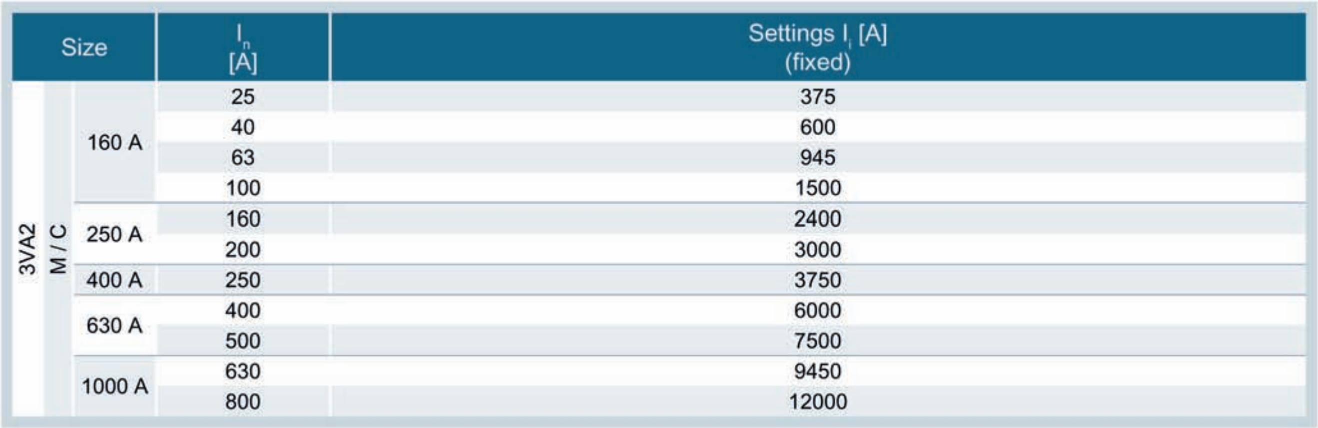

Size			I_n [A]	Settings I_i [A] (fixed)
3VA2	M / C	160 A	25	375
			40	600
			63	945
			100	1500
		250 A	160	2400
			200	3000
		400 A	250	3750
		630 A	400	6000
			500	7500
		1000 A	630	9450
			800	12000

Phase unbalance / phase failure:

I_{unbal} of current mean value	permanently set to 40%
I_{unbal} tripping time during startup	permanently set to 0.7 s
I_{unbal} tripping time during normal operation	permanently set to 4 s

3.3.4 5-series and 8-series electronic trip units

Parameter input via display unit

With 5-series and 8-series electronic trip units, it is possible to set more parameters and to scale the selection of parameters more finely than on 3-series electronic trip units.

Parameters are set via the display unit and its buttons. This functionality is available, however, only if a separate, dedicated power supply is connected to the molded case circuit breakers.

Potential alternatives for this power supply:

- 24 V power supply via:
    - EFB300 external function box
    - temporarily connected TD300 or TD500 test device
    - internal 24 V module
    - internal COM060 communication module
- Current flow > 20% I_n in one of the 3 phases

You will find further information on the parameter display in chapter Operator controls (Page 93).

Additional features of 8-series units

In addition to the features shared with 5-series trip units, 8-series units also offer:

- With three-pole molded case circuit breakers, a voltage tap for each phase and the option of connecting the potential of the neutral conductor
  With four-pole molded case circuit breakers, four internal voltage taps are provided for measuring the conductor voltages
- Additional measurement of power values (only possible with an external 24 V supply)

3.3.4.1 ETU550M electronic trip unit

Front view	Characteristic curve
	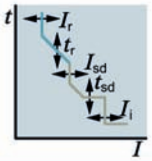

Motor protection - function LSI

The ETU550M electronic trip unit features:

- Adjustable parameter setting I_r for overload protection (L)
- Adjustable parameter setting I_{sd} for short-time delayed short circuit protection (S)
- Fixed parameter setting t_{sd} for short-time delayed short circuit protection (S), t_{sd} = 0.03 s
- Adjustable parameter setting I_i for short-circuit protection (I)
- Adjustable parameter setting T_c for the trip class or tripping time T_p
- Adjustable parameter setting for phase unbalance from 5 to 50% / Off, t_{unbal}

ETU550M setting parameters

Size			I_n [A]	I_r [A]	T_c	T_p [s]	I_{sd} [A]	t_{sd} [ms]	I_i [A]	Phase failure I (current unbalance)	Trip class [T_p in s at 7.2 x I_r]				
											10A	10 10E	20 20E	30	30E
3VA2	M / C	160 A	25	10 ... 25	10A, 10/10E, 20/20E, 30/30E	3 ... 30	30 ... 375	30	75 ... 375	5 ... 50% / OFF	4	8	17	24	24
			40	16 ... 40	10A, 10/10E, 20/ 20E, 30/30E	3 ... 30	48 ... 600		120 ... 600		4	8	17	24	24
			63	25 ... 63	10A, 10/10E, 20/ 20E, 30/30E	3 ... 30	76 ... 945		189 ... 945		4	8	17	24	24
			100	40 ... 100	10A, 10/10E, 20/ 20E, 30/30E	3 ... 25	120 ... 1500		300 ... 1500		4	8	17	24	24
		250 A	160	63 ... 160	10A, 10/10E, 20/ 20E, 30	3 ... 20	192 ... 2400		480 ... 2400		4	8	17	20	—
			200	80 ... 200	10A, 10/10E, 20/ 20E	3 ...15	240 ... 3000		600 ... 3000		4	8	12	15	—
		400 A	250	100 ... 250	10A, 10/10E, 20/ 20E, 30/30E	3 ... 30	300 ... 3750		750 ... 3750		4	8	17	24	24
		630 A	400	160 ... 400	10A, 10/10E, 20/ 20E, 30/30E	3 ... 25	480 ... 6000		1200 ... 6000		4	8	17	24	24
			500	200 ... 500	10A, 10/10E, 20/ 20E	3 ... 15	600 ... 7500		1500 ... 7500		4	8	12	15	—
		1000 A	630	250 ... 630	10A, 10/10E, 20/ 20E, 30/30E	3 ... 30	756 ... 9450		1890 ... 9450		4	8	17	24	24
			800	320 ... 800	10A, 10/10E, 20/ 20E, 30/30E	3 ... 30	960 ... 9600		2400 ... 9600		4	8	17	24	24

Overload protection L:

- I_r Adjustable from 0.4 to 1.0 x I_n in absolute current values
  $I_r < 50$ A: in steps of 0.5 A
  $I_r \geq 50$ A: in steps of 1 A

The ETU550M has a permanently activated thermal memory.

Short-time delayed short-circuit protection S:

- I_{sd} Adjustable from 1.2 to 12/15 x I_n in absolute current values
  $I_r < 50$ A: in steps of 0.5 A
  $I_r \geq 50$ A: in steps of 1 A
- t_{sd} Permanently set to 0.03 s

Instantaneous short-circuit protection I:

- I_i Adjustable from 3 to 12/15 x I_n in absolute current values
  $I_r < 50$ A: in steps of 0.5 A
  $I_r \geq 50$ A: in steps of 1 A

Trip class T_c or tripping time T_p:

- T_c Adjustable 10 A / 10E / 20 / 20E / 30
- T_p Adjustable from 3 to 13 / 15 / 25 / 30 s (dependent on rated current) in steps of 1 s

Phase unbalance I_{unbal}

- I_{unbal} Adjustable from 5 to 50% relative to the mean value of the three phase currents in steps of 1%
- t_{unbal} tripping time¹⁾ during startup Adjustable from 0.7 to 60 s, default setting 0.7 s
- t_{unbal} tripping time¹⁾ during normal operation Adjustable from 4 to 420 s, default setting 4 s

The phase unbalance function can be deactivated.

1) Adjustable tripping time with phase unbalance in firmware version 4.3 and higher.

3.3.4.2 ETU860M electronic trip unit

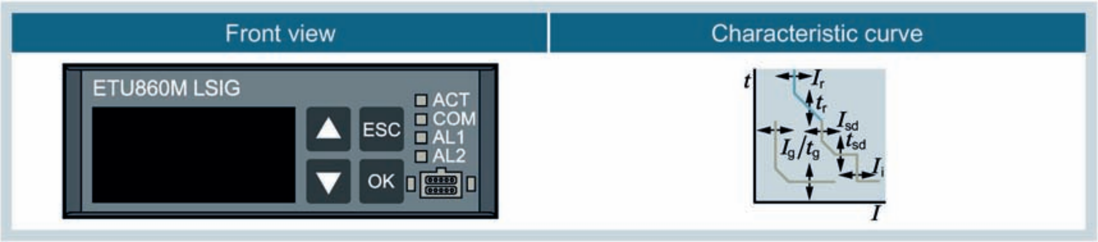

Motor protection - function LSIG

The ETU860M electronic trip unit features:

- Adjustable parameter setting I_r for overload protection (L)
- Adjustable parameter setting I_{sd} for short-time delayed short circuit protection (S)
- Fixed parameter setting t_{sd} for short-time delayed short circuit protection (S), $t_{sd} = 0.03$ s
- Adjustable parameter setting I_i for short-circuit protection (I)
- Adjustable parameter settings I_g and t_g for ground-fault protection (G)
- Adjustable parameter setting T_c for the trip class or tripping time T_p
- Adjustable parameter setting for phase unbalance from 5 to 50% / OFF, t_{unbal}
- Adjustable parameter settings I_b and t_b for blocking protection
- Adjustable parameter settings $I_{<<}$ and $t_{<<}$ for idle running protection

ETU860M setting parameters

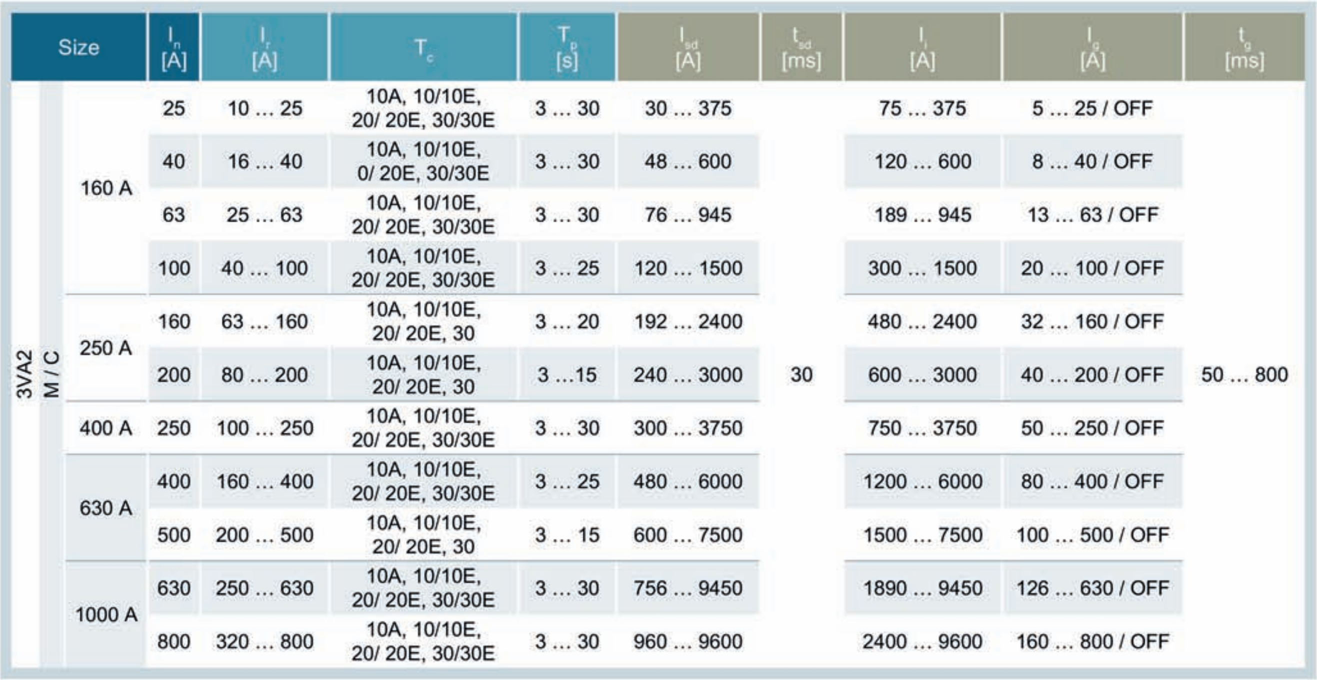

Size			I_n [A]	I_r [A]	T_c	T_p [s]	I_{sd} [A]	t_{sd} [ms]	I_i [A]	I_g [A]	t_g [ms]
3VA2	M / C	160 A	25	10 … 25	10A, 10/10E, 20/ 20E, 30/30E	3 … 30	30 … 375	30	75 … 375	5 … 25 / OFF	50 … 800
			40	16 … 40	10A, 10/10E, 0/ 20E, 30/30E	3 … 30	48 … 600		120 … 600	8 … 40 / OFF	
			63	25 … 63	10A, 10/10E, 20/ 20E, 30/30E	3 … 30	76 … 945		189 … 945	13 … 63 / OFF	
			100	40 … 100	10A, 10/10E, 20/ 20E, 30/30E	3 … 25	120 … 1500		300 … 1500	20 … 100 / OFF	
		250 A	160	63 … 160	10A, 10/10E, 20/ 20E, 30	3 … 20	192 … 2400		480 … 2400	32 … 160 / OFF	
			200	80 … 200	10A, 10/10E, 20/ 20E, 30	3 …15	240 … 3000		600 … 3000	40 … 200 / OFF	
		400 A	250	100 … 250	10A, 10/10E, 20/ 20E, 30/30E	3 … 30	300 … 3750		750 … 3750	50 … 250 / OFF	
		630 A	400	160 … 400	10A, 10/10E, 20/ 20E, 30/30E	3 … 25	480 … 6000		1200 … 6000	80 … 400 / OFF	
			500	200 … 500	10A, 10/10E, 20/ 20E, 30	3 … 15	600 … 7500		1500 … 7500	100 … 500 / OFF	
		1000 A	630	250 … 630	10A, 10/10E, 20/ 20E, 30/30E	3 … 30	756 … 9450		1890 … 9450	126 … 630 / OFF	
			800	320 … 800	10A, 10/10E, 20/ 20E, 30/30E	3 … 30	960 … 9600		2400 … 9600	160 … 800 / OFF	

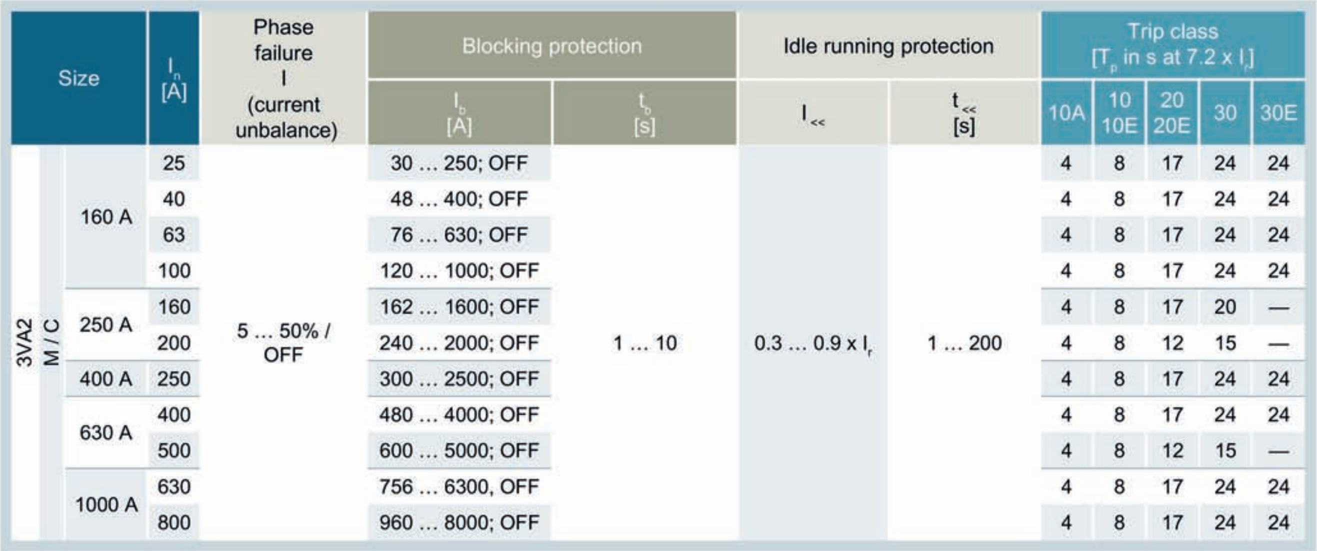

Size			I_n [A]	Phase failure I (current unbalance)	Blocking protection		Idle running protection		Trip class [T_p in s at 7.2 x I_r]				
					I_b [A]	t_b [s]	$I_{<<}$	$t_{<<}$ [s]	10A	10 10E	20 20E	30	30E
3VA2	M / C	160 A	25	5 … 50% / OFF	30 … 250; OFF	1 … 10	0.3 … 0.9 x I_r	1 … 200	4	8	17	24	24
			40		48 … 400; OFF				4	8	17	24	24
			63		76 … 630; OFF				4	8	17	24	24
			100		120 … 1000; OFF				4	8	17	24	24
		250 A	160		162 … 1600; OFF				4	8	17	20	—
			200		240 … 2000; OFF				4	8	12	15	—
		400 A	250		300 … 2500; OFF				4	8	17	24	24
		630 A	400		480 … 4000; OFF				4	8	17	24	24
			500		600 … 5000; OFF				4	8	12	15	—
		1000 A	630		756 … 6300, OFF				4	8	17	24	24
			800		960 … 8000; OFF				4	8	17	24	24

Overload protection L:

- I_r Adjustable from 0.4 to 1.0 x I_n in absolute current values
  I_r < 50 A: in steps of 0.5 A
  $I_r \geq$ 50 A: in steps of 1 A

The ETU860M has a permanently activated thermal memory.

Short-time delayed short-circuit protection S:

- I_{sd} Adjustable from 1.2 to 12/15 x I_n in absolute current values
  I_r < 50 A: in steps of 0.5 A
  $I_r \geq$ 50 A: in steps of 1 A
- t_{sd} Permanently set to 0.03 s

Instantaneous short-circuit protection I:

- I_i Adjustable from 3 to 12/15 x I_n in absolute current values
  I_r < 50 A: in steps of 0.5 A
  $I_r \geq$ 50 A: in steps of 1 A

Ground-fault protection G:

The detection of the ground-fault current is based on the vectorial summation of the three phase currents.

- I_g Adjustable from 0.2 to 1 x I_n in absolute current values
  I_r < 50 A: in steps of 0.5 A
  $I_r \geq$ 50 A: in steps of 1 A
- t_g Adjustable from 0.05 to 0.8 s
  in steps of 0.01 s

An alarm threshold I_{gA} between 0.2 to 1 x I_n can also be set; in steps of 1 A

The current-dependent curve shape I^2t_g = constant can be deactivated.

Ground-fault protection (G) can be deactivated.

Note

An external current transformer for the neutral conductor **cannot** be connected.

Trip class T_c or tripping time T_p:

- T_c Adjustable 10 A / 10E / 20 / 20E / 30
- T_p Adjustable from 3 to 13 / 15 / 25 / 30 s (dependent on rated current)
  in steps of 1 s

Phase unbalance I_{unbal}

I_{unbal}	Adjustable from 5 to 50% relative to the mean value of the three phase currents in steps of 1%
t_{unbal} tripping time[1)] during startup	Adjustable from 0.7 to 60 s, default setting 0.7 s
t_{unbal} tripping time[1)] during normal operation	Adjustable from 4 to 420 s, default setting 4 s

The phase unbalance function can be deactivated.

1) Adjustable tripping times with phase unbalance in firmware version 4.3 and higher.

Blocking protection:

I_b 1)	Adjustable from 0.4 to 10 x I_n in steps of 1 A
t_b 2)	Adjustable from 0.5 to 10 s in steps of 0.5 s

Blocking protection can be deactivated.

1) Adjustable I_b over 0.4 in firmware version 4.3 and higher

2) Adjustable t_b over 0.5 s in firmware version 4.3 and higher

Idle running protection:

$I_{<<}$	Adjustable from 0.3 to 0.9 x I_r in steps of 0.01 s
$t_{<<}$	Adjustable from 1 to 200 s in steps of 1 s

Idle running protection can be deactivated.

3.4 Use of 3VA1 molded case circuit breakers as switch disconnectors

Switch disconnectors are deployed as:

- Disconnectors in subdistribution and final distribution boards
- Bus couplers
- Disconnectors for machine groups, e.g. as maintenance and repair breakers
- Operator control and disconnector element for cables, busbars and device groups
- Application as disconnector unit
- Application as main switches
- Isolation of small distribution systems in industrial/commercial buildings
- Disconnection of loads

Switch disconnectors are capable of switching equipment and parts of electrical installations when they are conducting their operational current under normal operating conditions.

Switch disconnectors do not have overload or short-circuit releases. For this reason, a molded case circuit breaker or a fuse must be installed upstream of every switch disconnector. Refer to chapter Upstream protection of switch disconnectors (Page 170).

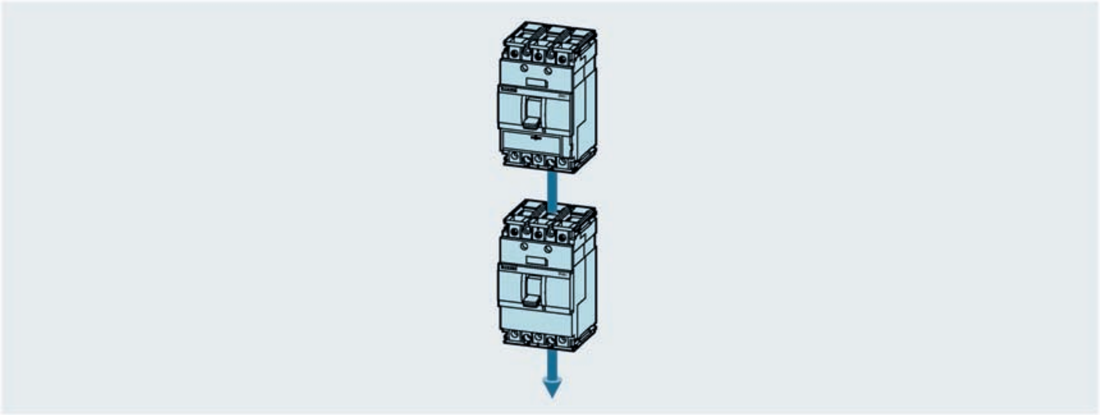

Compatibility of 3VA switch disconnectors and accessories

3VA1 switch disconnectors have been developed from the 3VA1 molded case circuit breaker design. Both share the same attributes listed below:

- Sizes
- Dimensions
- Mounting options
- Procedure for installing accessories

This means that a shunt trip can trip the switch disconnectors by remote control, or that the disconnector can be opened or closed by a side wall mounted rotary operator.

Isolating features

A switch disconnector isolates individual circuits or items of equipment so that maintenance or repair work can be carried out. This is a health and safety requirement.

In compliance with IEC 60947-3, the symbol below is clearly displayed on the front panel of switch disconnectors:

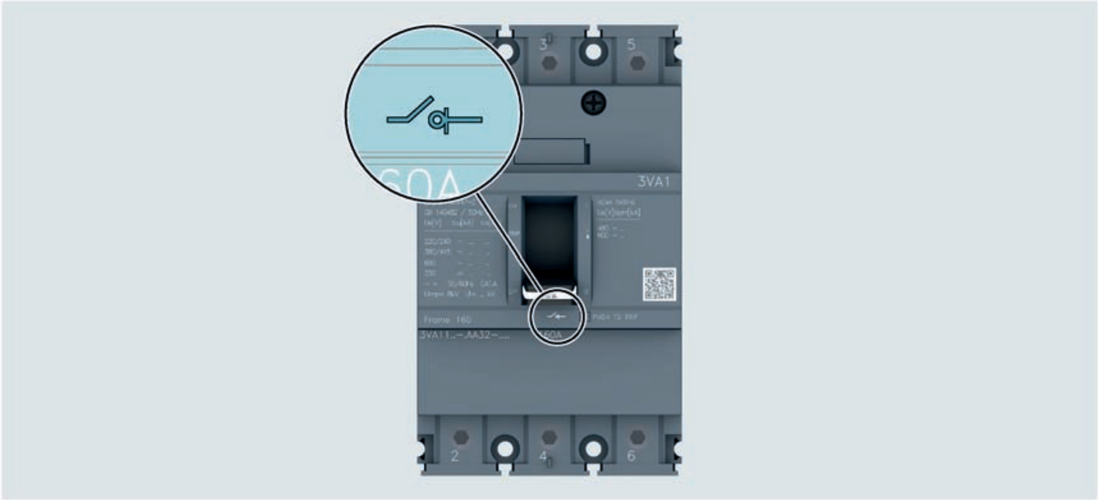

In accordance with the requirements of the standard regarding isolating function, the 3VA1 switch disconnector features:

- the switch disconnector symbol
- a correctly dimensioned isolating distance in the OFF position

When the switch disconnector handle is in the OFF position, the isolating distance between the main contacts is guaranteed to meet the requirements stipulated by standards pertaining to isolating features. This also applies when manual or motor operators installed on the disconnector are in the OFF position.

Only when the disconnector is in this safe position can it be locked by various methods (e.g. door mounted rotary operator, motor operator). The 3VA1 molded case circuit breaker therefore also meets the requirements for disconnector units according to IEC 60204-1 in the capacity of a switch disconnector.

Making capacity

Switch disconnectors have a predefined rated making and rated breaking capacity. As a result, loads are reliably switched on and off up to the specified breaking capacity.

Features

Switch disconnectors are primarily designed to conduct uninterrupted current up to the magnitude of the permissible rated uninterrupted current I_u.

Another important feature of these devices is their rated short-circuit making capacity I_{cm}, as this defines the capability of the switch disconnector to withstand dynamic and thermal current loads. Current loads can reach very high values when the switch disconnector makes on a short circuit. Switch disconnectors are designed to withstand these short-circuit currents without sustaining damage up to the value of their rated short-circuit making capacity.

Utilization categories for switch disconnectors

Utilization categories are differentiated according to the following criteria:

- The relationship between operational current and rated operational current
- The relationship between operational voltage and rated operational voltage
- Power factor (p.f.)
- Time constant

The utilization category is also identified by a letter:
A - for frequent operation
B - for infrequent operation, e.g. disconnectors which are used only to isolate parts of electrical installations for maintenance purposes.

It is important to note, however, that the term "frequent operation" does not mean that the switch disconnector may be used to start up, accelerate or shut down individual motors in normal operation.

For example, a switch disconnector with a rated operational current I_e of 160 A and a rated operational voltage U_e of 400 V AC may be used for frequent switching of a mixture of resistive and inductive loads including moderate overload only if it can conduct a making current I of 480 A (3 x I_e) and withstand a making voltage U of 420 V AC (1.05 x U_e) with a power factor of 0.65. This capability corresponds to utilization category AC-22A.

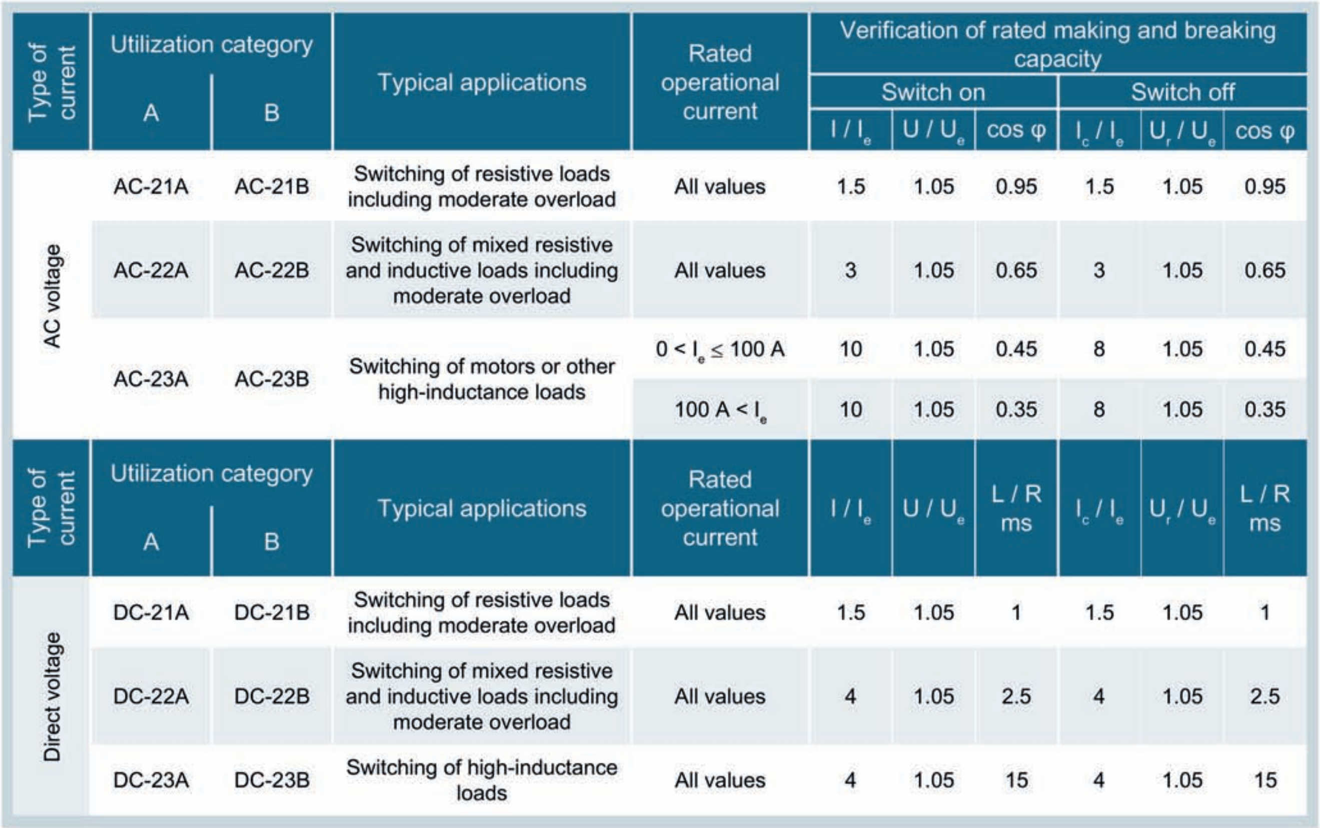

Type of current	Utilization category		Typical applications	Rated operational current	Verification of rated making and breaking capacity					
					Switch on			Switch off		
	A	B			I / I_e	U / U_e	cos φ	I_c / I_e	U_r / U_e	cos φ
AC voltage	AC-21A	AC-21B	Switching of resistive loads including moderate overload	All values	1.5	1.05	0.95	1.5	1.05	0.95
	AC-22A	AC-22B	Switching of mixed resistive and inductive loads including moderate overload	All values	3	1.05	0.65	3	1.05	0.65
	AC-23A	AC-23B	Switching of motors or other high-inductance loads	$0 < I_e \leq 100$ A	10	1.05	0.45	8	1.05	0.45
				$100 \text{ A} < I_e$	10	1.05	0.35	8	1.05	0.35
Type of current	Utilization category A	Utilization category B	Typical applications	Rated operational current	I / I_e	U / U_e	L / R ms	I_c / I_e	U_r / U_e	L / R ms
Direct voltage	DC-21A	DC-21B	Switching of resistive loads including moderate overload	All values	1.5	1.05	1	1.5	1.05	1
	DC-22A	DC-22B	Switching of mixed resistive and inductive loads including moderate overload	All values	4	1.05	2.5	4	1.05	2.5
	DC-23A	DC-23B	Switching of high-inductance loads	All values	4	1.05	15	4	1.05	15

I	Making current
I_c	Breaking current
I_e	Rated operational current
U	Applied voltage
U_e	Rated operational voltage
U_r	Recovery voltage

3.4.1 Overview of 3VA1 as switch disconnectors

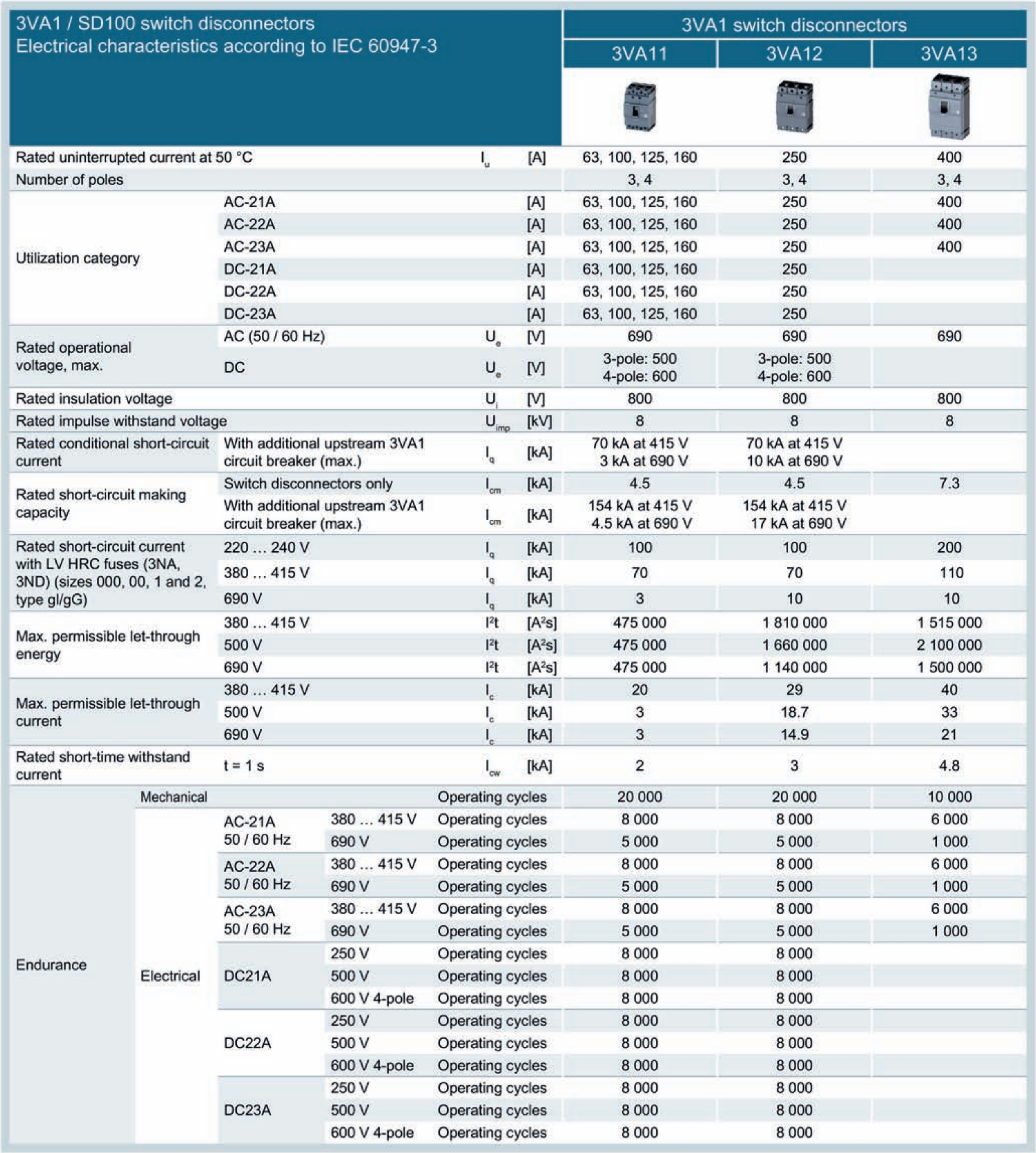

3VA1 / SD100 switch disconnectors Electrical characteristics according to IEC 60947-3						3VA1 switch disconnectors		
						3VA11	3VA12	3VA13
Rated uninterrupted current at 50 °C				I_u	[A]	63, 100, 125, 160	250	400
Number of poles						3, 4	3, 4	3, 4
Utilization category	AC-21A				[A]	63, 100, 125, 160	250	400
	AC-22A				[A]	63, 100, 125, 160	250	400
	AC-23A				[A]	63, 100, 125, 160	250	400
	DC-21A				[A]	63, 100, 125, 160	250	
	DC-22A				[A]	63, 100, 125, 160	250	
	DC-23A				[A]	63, 100, 125, 160	250	
Rated operational voltage, max.	AC (50 / 60 Hz)			U_e	[V]	690	690	690
	DC			U_e	[V]	3-pole: 500 4-pole: 600	3-pole: 500 4-pole: 600	
Rated insulation voltage				U_i	[V]	800	800	800
Rated impulse withstand voltage				U_{imp}	[kV]	8	8	8
Rated conditional short-circuit current	With additional upstream 3VA1 circuit breaker (max.)			I_q	[kA]	70 kA at 415 V 3 kA at 690 V	70 kA at 415 V 10 kA at 690 V	
Rated short-circuit making capacity	Switch disconnectors only			I_{cm}	[kA]	4.5	4.5	7.3
	With additional upstream 3VA1 circuit breaker (max.)			I_{cm}	[kA]	154 kA at 415 V 4.5 kA at 690 V	154 kA at 415 V 17 kA at 690 V	
Rated short-circuit current with LV HRC fuses (3NA, 3ND) (sizes 000, 00, 1 and 2, type gI/gG)	220 … 240 V			I_q	[kA]	100	100	200
	380 … 415 V			I_q	[kA]	70	70	110
	690 V			I_q	[kA]	3	10	10
Max. permissible let-through energy	380 … 415 V			I^2t	[A^{2}s]	475 000	1 810 000	1 515 000
	500 V			I^2t	[A^{2}s]	475 000	1 660 000	2 100 000
	690 V			I^2t	[A^{2}s]	475 000	1 140 000	1 500 000
Max. permissible let-through current	380 … 415 V			I_c	[kA]	20	29	40
	500 V			I_c	[kA]	3	18.7	33
	690 V			I_c	[kA]	3	14.9	21
Rated short-time withstand current	t = 1 s			I_{cw}	[kA]	2	3	4.8
Endurance	Mechanical				Operating cycles	20 000	20 000	10 000
	Electrical	AC-21A 50 / 60 Hz	380 … 415 V		Operating cycles	8 000	8 000	6 000
			690 V		Operating cycles	5 000	5 000	1 000
		AC-22A 50 / 60 Hz	380 … 415 V		Operating cycles	8 000	8 000	6 000
			690 V		Operating cycles	5 000	5 000	1 000
		AC-23A 50 / 60 Hz	380 … 415 V		Operating cycles	8 000	8 000	6 000
			690 V		Operating cycles	5 000	5 000	1 000
		DC21A	250 V		Operating cycles	8 000	8 000	
			500 V		Operating cycles	8 000	8 000	
			600 V 4-pole		Operating cycles	8 000	8 000	
		DC22A	250 V		Operating cycles	8 000	8 000	
			500 V		Operating cycles	8 000	8 000	
			600 V 4-pole		Operating cycles	8 000	8 000	
		DC23A	250 V		Operating cycles	8 000	8 000	
			500 V		Operating cycles	8 000	8 000	
			600 V 4-pole		Operating cycles	8 000	8 000	

3.4.2 Upstream protection of switch disconnectors

Switch disconnectors are not equipped with an integral overload or short-circuit release. For this reason, a molded case circuit breaker or a fuse must be installed upstream of every switch disconnector.

The coordination tables given below contain the following information:

- The correct assignment of molded case circuit breakers to the switch disconnectors which require protection
- The maximum permissible rms short-circuit current kA rms for each combination of molded case circuit breaker and switch disconnector

Protection of 3VA1 switch disconnectors at 50 / 60 Hz by a 3VA1 molded case circuit breaker

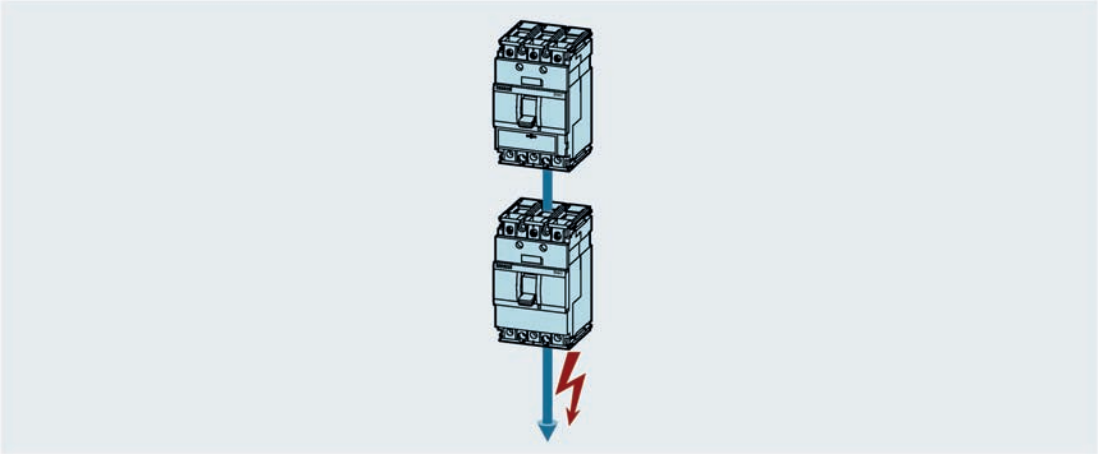

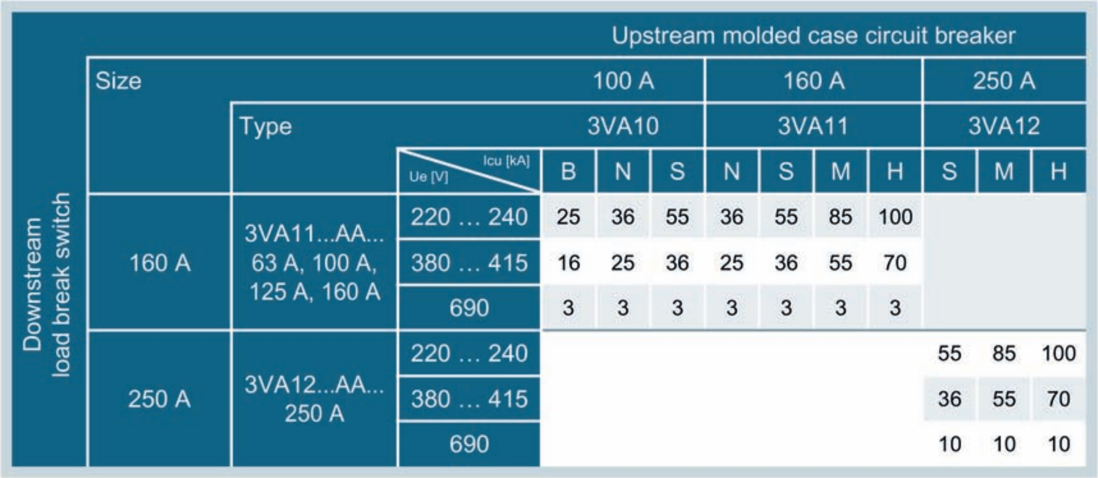

				Upstream molded case circuit breaker									
	Size			100 A			160 A				250 A		
		Type		3VA10			3VA11				3VA12		
			Icu [kA] Ue [V]	B	N	S	N	S	M	H	S	M	H
Downstream load break switch	160 A	3VA11...AA... 63 A, 100 A, 125 A, 160 A	220 … 240	25	36	55	36	55	85	100			
			380 … 415	16	25	36	25	36	55	70			
			690	3	3	3	3	3	3	3			
	250 A	3VA12...AA... 250 A	220 … 240								55	85	100
			380 … 415								36	55	70
			690								10	10	10

More combinations can be found on the Internet (http://www.siemens.com/3VA-Documentation).

Combinations with other protective devices can be configured at any time by means of SIMARIS design or using the characteristics maximum let-through energy I^2t_{max} and maximum let-through current $I_{c\ max}$ of the 3VA1 switch disconnector. You will find these characteristics in the technical product data sheets and in the table in chapter Overview of 3VA1 as switch disconnectors (Page 169).

Note

In the event of a fault, all switching devices in the affected branch must be function-tested (see Regular maintenance (Page 535)).

3.5 DC network applications of 3VA molded case circuit breakers

The main applications for 3VA circuit breakers in DC installations or networks are:

- Public transport systems, e.g. electric cars, underground rail networks and streetcars
- UPS systems
- Photovoltaic systems
- Wind power plants

3VA1 molded case circuit breakers as line protection devices with thermal overload releases and magnetic trip units with short-circuit protection are suitable for use in DC networks.

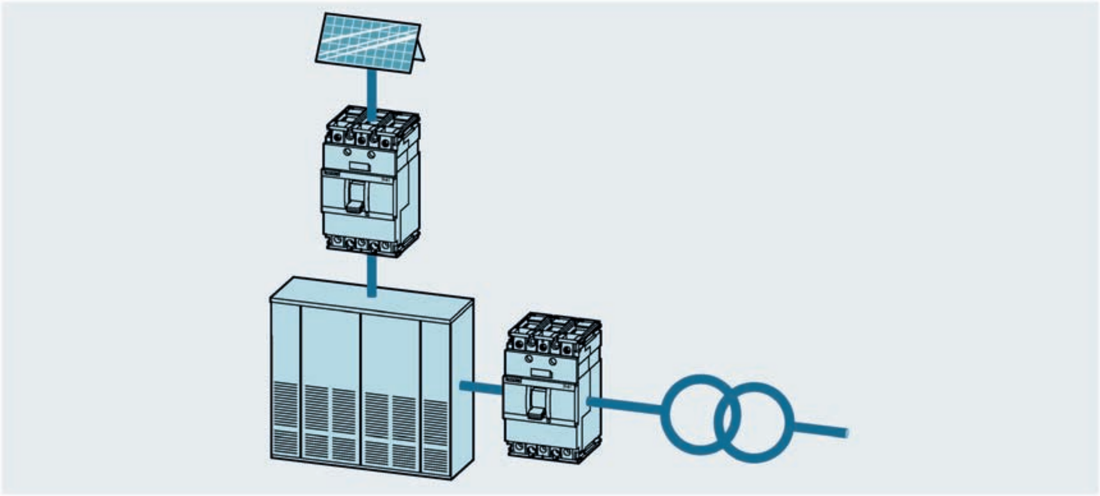

Features specific to direct current

Short-circuits are interrupted in DC networks by a method similar to the one applied to high alternating currents, i.e. by current limiting. A high arc voltage develops in molded case circuit breakers, which forces a current zero when the arc voltage exceeds the value of the recovery voltage. The current rise, however, is determined by the time constant and not the make time or power factor.

Overloads are interrupted by a completely different principle to the method applied in AC networks. With direct currents, there is no periodic zero crossing and thus also no period of time without magnetic energy in the circuit during which the conditions for extinguishing the arc are favorable. The arc is not extinguished until the arc voltage exceeds the line voltage and the current reduces to zero. In other words, a high arc voltage must be developed in order to interrupt the direct current.

The rated operational current values are generally the same for DC and AC applications.

With DC applications, the breaking capacity depends only on:

- The arc extinction method used
- The line voltage

3.5.1 Variants

The same thermal-magnetic trip units used as line protection devices in AC installations are also available for protecting DC installations.

However, a correction factor must be applied to the magnetic trip unit.

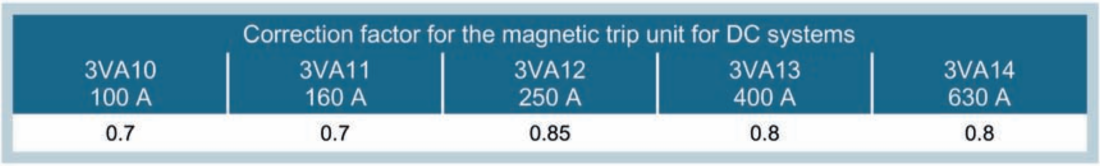

Correction factor for the magnetic trip unit for DC systems				
3VA10 100 A	3VA11 160 A	3VA12 250 A	3VA13 400 A	3VA14 630 A
0.7	0.7	0.85	0.8	0.8

Example:

3VA1 160 A, TM240 ATAM:
If the switching device is to trip instantaneously in response to an overcurrent of 1200 A, the parameter I_i for instantaneous short-circuit protection (I) must be set to:

I_i = 1200 A x 0.7 = 840 A.

For further information on trip units and details about setting parameters, please refer to chapter "Line protection applications of 3VA molded case circuit breakers (Page 110)".

It is not possible to use electronic trip units for this application.

3.5.2 Breaking capacity with direct current

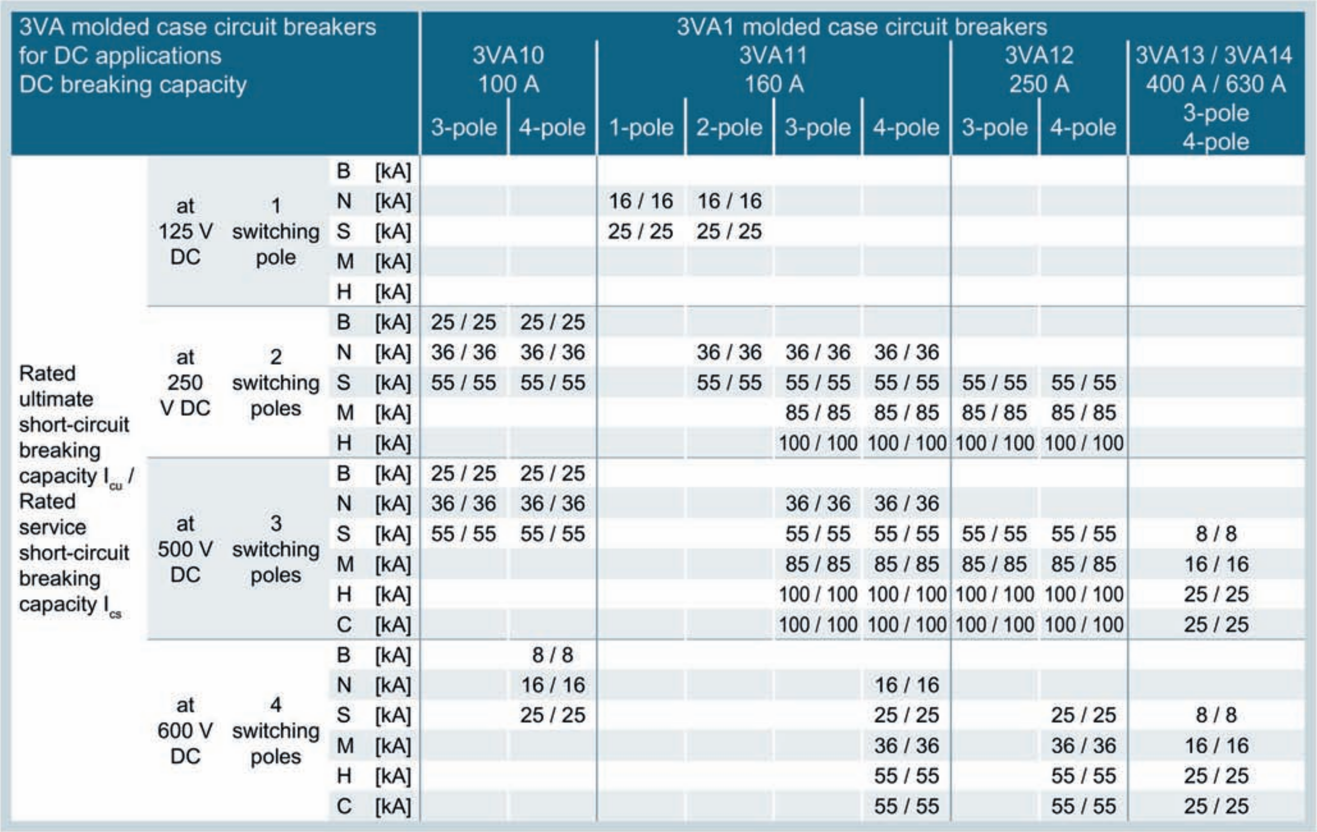

3VA molded case circuit breakers for DC applications DC breaking capacity					3VA1 molded case circuit breakers								
					3VA10 100 A		3VA11 160 A				3VA12 250 A		3VA13 / 3VA14 400 A / 630 A
					3-pole	4-pole	1-pole	2-pole	3-pole	4-pole	3-pole	4-pole	3-pole 4-pole
Rated ultimate short-circuit breaking capacity I_{cu} / Rated service short-circuit breaking capacity I_{cs}	at 125 V DC	1 switching pole	B	[kA]									
			N	[kA]			16 / 16	16 / 16					
			S	[kA]			25 / 25	25 / 25					
			M	[kA]									
			H	[kA]									
	at 250 V DC	2 switching poles	B	[kA]	25 / 25	25 / 25							
			N	[kA]	36 / 36	36 / 36		36 / 36	36 / 36	36 / 36			
			S	[kA]	55 / 55	55 / 55		55 / 55	55 / 55	55 / 55	55 / 55	55 / 55	
			M	[kA]					85 / 85	85 / 85	85 / 85	85 / 85	
			H	[kA]					100 / 100	100 / 100	100 / 100	100 / 100	
	at 500 V DC	3 switching poles	B	[kA]	25 / 25	25 / 25							
			N	[kA]	36 / 36	36 / 36			36 / 36	36 / 36			
			S	[kA]	55 / 55	55 / 55			55 / 55	55 / 55	55 / 55	55 / 55	8 / 8
			M	[kA]					85 / 85	85 / 85	85 / 85	85 / 85	16 / 16
			H	[kA]					100 / 100	100 / 100	100 / 100	100 / 100	25 / 25
			C	[kA]					100 / 100	100 / 100	100 / 100	100 / 100	25 / 25
	at 600 V DC	4 switching poles	B	[kA]		8 / 8							
			N	[kA]		16 / 16				16 / 16			
			S	[kA]		25 / 25				25 / 25		25 / 25	8 / 8
			M	[kA]						36 / 36		36 / 36	16 / 16
			H	[kA]						55 / 55		55 / 55	25 / 25
			C	[kA]						55 / 55		55 / 55	25 / 25

3.5.3 Recommended circuit configurations for DC systems

Max. permissible direct voltage U_e		DC 1-pole disconnection	DC 2-pole (all-pole) disconnection	
		Grounded system	Grounded system	Non-grounded system
125 V DC	1 switching pole	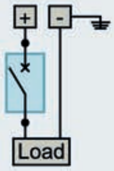	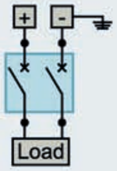	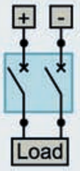
250 V DC	2 switching poles	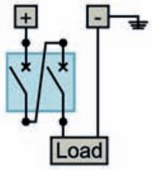	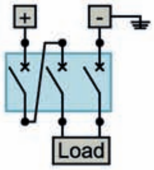	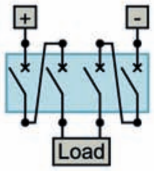
500 V DC 1)	3 switching poles	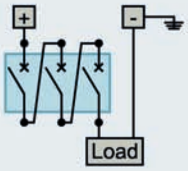	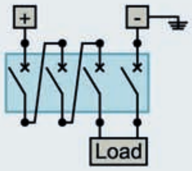	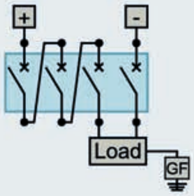
600 V DC 1)	4 switching poles	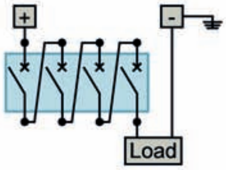		

GF Ground-fault monitoring

1) Ue > 250 V DC: DC insulating plate is mandatory for sizes 3VA10 and 3VA11 with a non-insulated mounting plate (see chapter Insulating measures (Page 246))

Note

DC 2-pole (all-pole disconnection), grounded system

The grounded pole must always be assigned to the individual conducting path, so that in the event of a ground fault there are always two conducting paths in series in a circuit with 3-pole molded case circuit breakers, and three conducting paths in series in a circuit with 4-pole molded case circuit breakers.

Note

DC 2-pole (all-pole disconnection), non-grounded system

If there is no possibility of a double ground fault occurring, or if any ground fault that does occur is dealt with immediately (ground-fault monitoring), 500 V will be the maximum permissible direct voltage. In a non-grounded system, all poles must be disconnected.

Further circuits are available on request.

See also

Insulating measures (Page 246)

3.6 Applications of the 3VA molded case circuit breaker with frequency converters

3VA molded case circuit breakers can be used as protective devices in systems using frequency converters.

Applications of 3VA1 molded case circuit breakers with frequency converters

The 3VA1 thermal-magnetic molded case circuit breakers can be used on the primary or secondary side of the frequency converter in these applications.

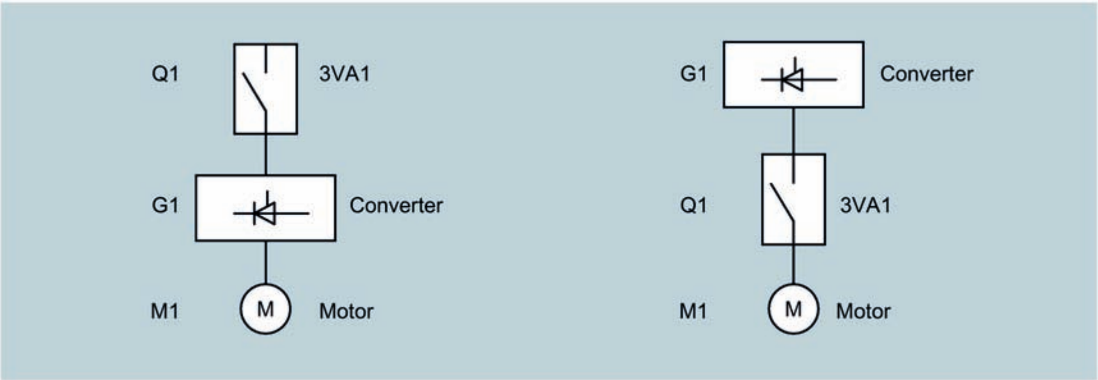

Applications of 3VA2 molded case circuit breakers with frequency converters

The 3VA2 electronic molded case circuit breakers can only be used on the primary side of the frequency converter in the specified 50/60 Hz frequency range. Higher or lower frequencies result in major deviations in measured values with the result that the tripping characteristic cannot be adhered to.

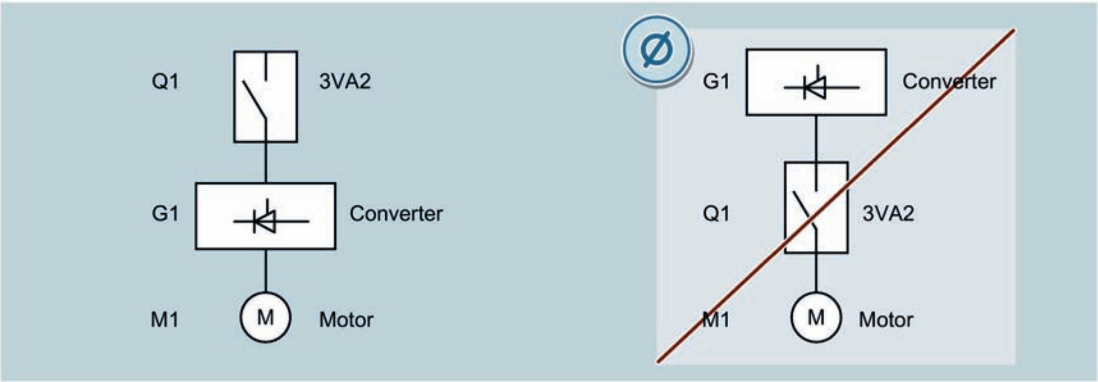

If the 3VA2 molded case circuit breaker with communication is used, it must be ensured that only one 24 V DC power supply unit is used in the system. If this power supply unit is installed on the primary side, the cable must have additional shielding and must be connected to ground. Interruptions in communication might otherwise occur.

Note

You can find tables of tested protective devices for SINAMICS PM240-2 Power Modules on the Internet (https://support.industry.siemens.com/cs/ww/en/view/109486009).

3.7 400 Hz network applications of 3VA molded case circuit breakers

400 Hz networks are used for:

- Ground power supply systems for aircraft
- On-board electrical systems of marine craft and aircraft
- Other external stations of airports which are protected by uninterruptible power supplies, e.g. radar installations, data processing equipment, communication systems

It is important to supply the on-board electrical systems of aircraft with a very smooth DC voltage. This can be generated more easily by 400 Hz power supplies than by 50 Hz networks. Moreover, the power transmitters (transformers) are smaller and lighter by comparison with 50 Hz networks, two important arguments for using 400 Hz on-board electrical systems in aircraft and some marine craft.

Suitable 3VA molded case circuit breakers and trip units

3VA1 molded case circuit breakers equipped with thermal-magnetic trip units TM210, TM220 and TM240 are suitable for use in 400 Hz networks.

Features specific to 400 Hz supplies

The thermal overload release of the 3VA1 molded case circuit breaker comprises a bimetal through which current flows, causing temperature rise. With currents at 400 Hz frequency, the temperature rise in the bimetal is higher than at 50 Hz. This is due to eddy-current losses and the reduction in the available conductor cross section as a result of the skin effect. The rated operational current must therefore be reduced by 10 % of the value used in 50/60 Hz applications.

Furthermore, a correction factor must be applied to the magnetic trip unit.

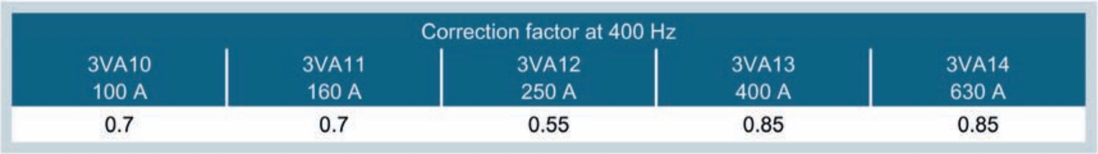

Correction factor at 400 Hz				
3VA10 100 A	3VA11 160 A	3VA12 250 A	3VA13 400 A	3VA14 630 A
0.7	0.7	0.55	0.85	0.85

Example:

3VA1 160A, TM240 ATAM:

- Reduction by 10%:
  Maximum permissible rated operational current for 400 Hz applications =
  160 A x 0.9 = 144 A
- Correction factor 0.7:
  If the switching device is to trip instantaneously in response to an overcurrent of 1200 A, the parameter I_i for instantaneous short-circuit protection (I) must be set to I_i = 1200 A x 0.7 = 840 A.

For further information on trip units and details about the setting parameters, please refer to chapter Line protection applications of 3VA molded case circuit breakers (Page 110).

It is not possible to use electronic trip units for this application.

See also

Temperature compensation for thermal-magnetic trip units TM210, TM220 and TM240 (Page 632)

3.8 IT system applications of 3VA molded case circuit breakers

The main advantage of IT systems is that they safeguard continuity of service by electrical installations and are therefore deployed predominantly in consumer installations where availability of electrical power is a priority. As a general rule, circuits are interrupted only if two insulation faults occur simultaneously.

Preferred applications for IT systems are therefore:

- In buildings with rooms used for medical purposes
- When mobile generators are in operation
- In certain industries, e.g.:
  - in the chemical industry
  - in the oil industry
  - in the steel industry
  - in mining

The IT system is a low-voltage power supply network with increased failure-safety in the event of ground faults. In an IT system, live phases are not connected to ground. A ground fault does not cause system shutdown. IEC 60364-4-41 (VDE 0100-410) therefore requires insulation monitoring to indicate a fault of this kind. In the unusual event that a fault on the load side coincides with a second fault on the line side, the full phase-to-phase voltage is connected across one contact of the breaker. Siemens 3VA molded case circuit breakers for line protection, whether they are equipped with a thermal-magnetic trip unit or an electronic trip unit, are suitable for use in IT systems.

Accordingly, the molded case circuit breakers meet the requirements of standard IEC / DIN EN 60947-2 Annex H up to a maximum voltage ($U_{e, max.}$) of 690 V AC.

3.8.1 Selection criteria for 3VA molded case circuit breakers

The circuit breakers are always dimensioned and selected irrespective of the system type in which they will be deployed.

The circuit breaker is always selected according to the maximum potential short-circuit current in the IT system. The device is selected in accordance with the relevant I_{cu} values of the 3VA molded case circuit breaker.

If the system operator ensures that no double ground fault can occur on the input or output side of the molded case circuit breaker, the breaking capacity of I_{cu} /I_{cs} remains unchanged in IT systems. If this cannot be ensured, the values in accordance with the standard IEC 60947-2 Annex H apply for single-pole short circuits.

3.8.2 Fault situation

The most critical fault for molded case circuit breakers in ungrounded IT systems is a double-phase-to-ground fault on the infeed and load ends of the molded case circuit breaker. If this fault occurs, the entire phase-to-phase voltage is applied across one pole of the molded case circuit breaker.

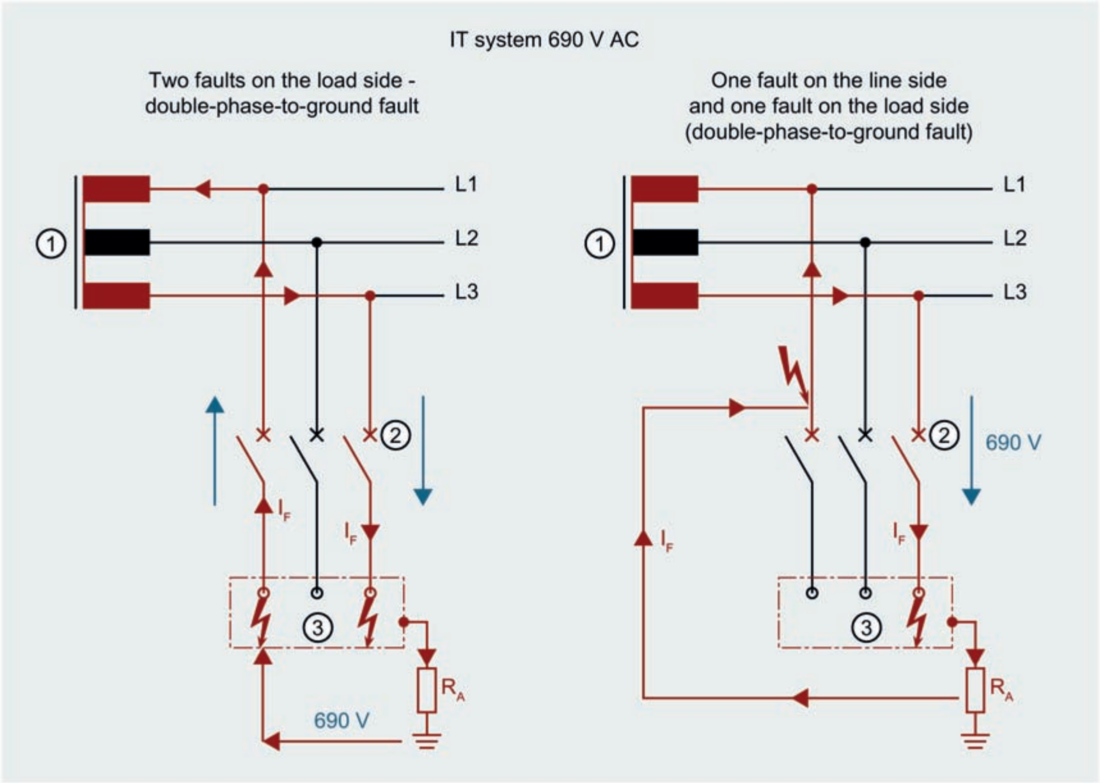

①	Ungrounded transformer
②	Molded case circuit breaker
③	Exposed conductive part
R_A	Contact resistance of exposed conductive part ground

Two faults on the load side - double-phase-to-ground fault

- A fault develops between two phases and an exposed conductive part or ground.
- A voltage of 690 V is applied at the main contacts. This voltage is disconnected by two breaker poles.
- The molded case circuit breaker is rated for I_{cu}/I_{cs} at 690 V.

One fault on the line side and one fault on the load side (double-phase-to-ground fault)

- Single-pole short circuit, the full phase-to-phase voltage of 690 V is applied to main contact L3.
- Selection of the molded case circuit breaker according to their suitability as defined in IEC 60947-2, Annex H.

3.9 Safety-related applications of 3VA molded case circuit breakers

The 3VA molded case circuit breakers can be used in safety-related applications (up to Category 2 and PL d according to ISO 13849-1 and SIL 2 according to IEC 62061).

As the molded case circuit breaker has no diagnostic capability, such as mirror contacts, it cannot be used as a second function channel in the safety function. Neither is is practical to trip the molded case circuit breaker every time a safety request occurs, as it has to be reset manually. However it is possible to use the molded case circuit breaker as a "test device output". When combined with a contactor, this corresponds to Category 2 according to ISO 13849-1 and can therefore achieve up to PL d. According to IEC 62061, a hardware fault tolerance (HFT) of 0 can be assumed and up to SILCL 2 can therefore be achieved.

Category 2 can be implemented if the contactor is monitored with the evaluation unit and a sufficiently prompt fault response (welding of main contacts) takes place in the event of contactor failure. The molded case circuit breaker is immediately tripped by an undervoltage release in the event of a fault. It is therefore a single-channel architecture with a specified fault reaction.

Moreover, the power contactor and the molded case circuit breaker constitute proven components according to ISO 13849-2.

DANGER

Danger of death due to undetected fault cluster

Undetected fault clusters can result in life-threatening situations in the application.

In order to avoid an undetected fault cluster, the molded case circuit breaker must be tested after 6 to 12 months at the latest.
Documentary evidence of the tests performed must be kept by the user during the period of use.

The set delay time has an effect on the maximum response time.

DANGER

Danger of death due to excessively long delay time

The delay time set on the molded case circuit breaker has an effect on the maximum response time.

The user must ensure that this response time in the event of a fault is sufficiently short based on the risk assessment.

You can find details and calculation examples in the FAQs on the Internet (https://support.industry.siemens.com/cs/ww/en/view/40349715). The B10(d) values (https://support.industry.siemens.com/cs/ww/en/view/109738685) of the 3VA molded case circuit breakers are also listed there.

Accessories

4

4.1 Overview of accessories for 3VA molded case circuit breakers

4.1.1 Accessories groups

A comprehensive range of accessories is available to help you adapt 3VA molded case circuit breakers to the requirements of the specific application.

The table below indicates which accessories are compatible with particular 3VA molded case circuit breakers, and which sizes of breakers are compatible with the same accessory:

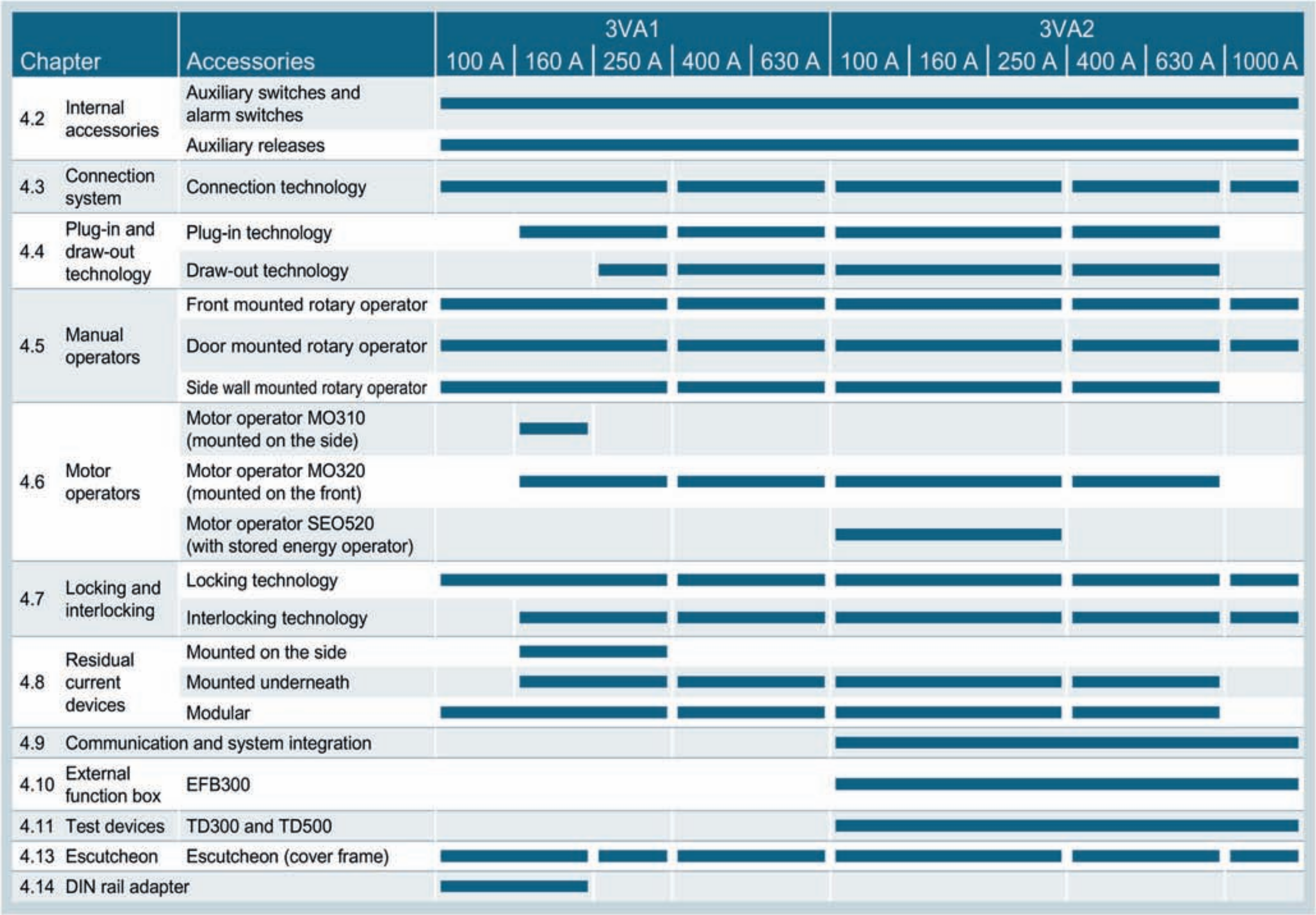

Chapter	Accessories	3VA1					3VA2					
		100 A	160 A	250 A	400 A	630 A	100 A	160 A	250 A	400 A	630 A	1000 A
4.2 Internal accessories	Auxiliary switches and alarm switches	■	■	■	■	■	■	■	■	■	■	■
	Auxiliary releases	■	■	■	■	■	■	■	■	■	■	■
4.3 Connection system	Connection technology	■	■	■	■	■	■	■	■	■	■	■
4.4 Plug-in and draw-out technology	Plug-in technology		■	■	■	■	■	■	■	■	■	
	Draw-out technology			■	■	■	■	■	■	■	■	
4.5 Manual operators	Front mounted rotary operator	■	■	■	■	■	■	■	■	■	■	■
	Door mounted rotary operator	■	■	■	■	■	■	■	■	■	■	■
	Side wall mounted rotary operator	■	■	■	■	■	■	■	■	■	■	
4.6 Motor operators	Motor operator MO310 (mounted on the side)		■									
	Motor operator MO320 (mounted on the front)		■	■	■	■	■	■	■	■	■	
	Motor operator SEO520 (with stored energy operator)						■	■	■			
4.7 Locking and interlocking	Locking technology	■	■	■	■	■	■	■	■	■	■	■
	Interlocking technology		■	■	■	■	■	■	■	■	■	■
4.8 Residual current devices	Mounted on the side		■	■								
	Mounted underneath		■	■	■	■	■	■	■	■	■	
	Modular	■	■	■	■	■	■	■	■	■	■	
4.9 Communication and system integration							■	■	■	■	■	■
4.10 External function box	EFB300						■	■	■	■	■	■
4.11 Test devices	TD300 and TD500						■	■	■	■	■	■
4.13 Escutcheon	Escutcheon (cover frame)	■	■	■	■	■	■	■	■	■	■	■
4.14 DIN rail adapter		■	■									

4.1.2 Possible combinations of of accessories

The tables below indicate the combinability of different accessories. The boxes to the right of the grey diagonal line indicate whether or not accessories can be combined.

Examples:

Wire connector, 2 cables, and insulating plate offset (green lines in table below):

Common box: contains square symbol	Accessories can be combined

Wire connector, 2 cables, and terminal cover (red lines in table below):

Common box: is empty	Accessories cannot be combined

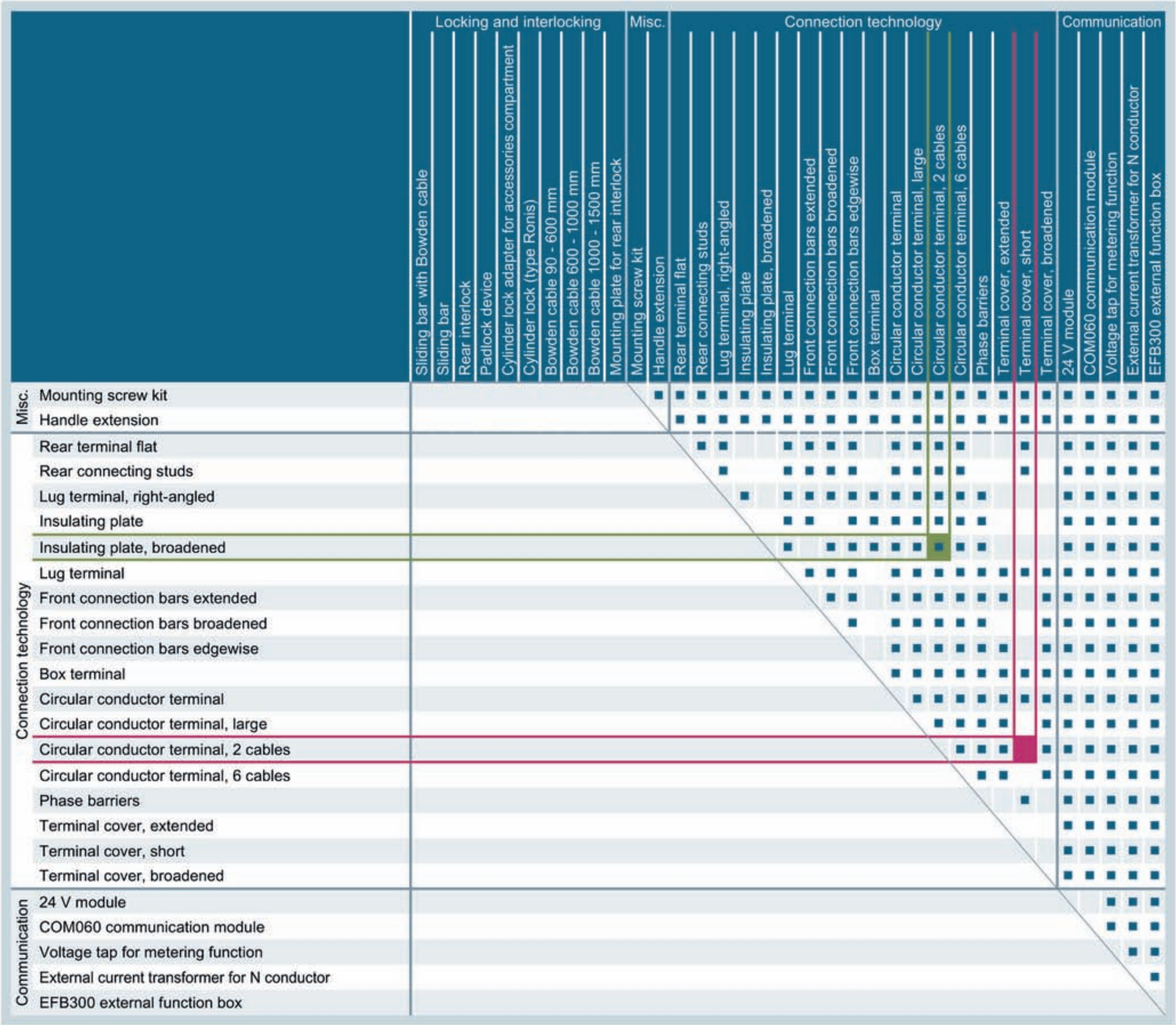

		Locking and interlocking										Misc.		Connection technology																		Communication				
		Sliding bar with Bowden cable	Sliding bar	Rear interlock	Padlock device	Cylinder lock adapter for accessories compartment	Cylinder lock (type Ronis)	Bowden cable 90 - 600 mm	Bowden cable 600 - 1000 mm	Bowden cable 1000 - 1500 mm	Mounting plate for rear interlock	Mounting screw kit	Handle extension	Rear terminal flat	Rear connecting studs	Lug terminal, right-angled	Insulating plate	Insulating plate, broadened	Lug terminal	Front connection bars extended	Front connection bars broadened	Front connection bars edgewise	Box terminal	Circular conductor terminal	Circular conductor terminal, large	Circular conductor terminal, 2 cables	Circular conductor terminal, 6 cables	Phase barriers	Terminal cover, extended	Terminal cover, short	Terminal cover, broadened	24 V module	COM060 communication module	Voltage tap for metering function	External current transformer for N conductor	EFB300 external function box
Misc.	Mounting screw kit												■	■	■	■	■	■	■	■	■	■	■	■	■	■	■	■	■	■	■	■	■	■	■	■
	Handle extension													■	■	■	■	■	■	■	■	■	■	■	■	■	■	■	■	■	■	■	■	■	■	■
Connection technology	Rear terminal flat														■	■			■	■	■	■		■	■	■	■			■		■	■	■	■	■
	Rear connecting studs															■			■	■	■	■		■	■	■	■			■		■	■	■	■	■
	Lug terminal, right-angled																■		■	■	■	■	■	■	■	■	■	■				■	■	■	■	■
	Insulating plate																		■	■		■	■	■	■	■	■	■				■	■	■	■	■
	Insulating plate, broadened																		■		■	■	■	■	■	■	■	■				■	■	■	■	■
	Lug terminal																			■	■	■		■	■	■	■	■	■	■	■	■	■	■	■	■
	Front connection bars extended																				■	■		■	■	■	■	■	■		■	■	■	■	■	■
	Front connection bars broadened																					■		■	■	■	■	■			■	■	■	■	■	■
	Front connection bars edgewise																							■	■	■	■	■	■		■	■	■	■	■	■
	Box terminal																							■	■	■	■	■	■	■	■	■	■	■	■	■
	Circular conductor terminal																								■	■	■	■	■	■	■	■	■	■	■	■
	Circular conductor terminal, large																									■	■	■	■		■	■	■	■	■	■
	Circular conductor terminal, 2 cables																										■	■	■	🟥	■	■	■	■	■	■
	Circular conductor terminal, 6 cables																											■	■		■	■	■	■	■	■
	Phase barriers																													■		■	■	■	■	■
	Terminal cover, extended																															■	■	■	■	■
	Terminal cover, short																															■	■	■	■	■
	Terminal cover, broadened																															■	■	■	■	■
Communication	24 V module																																	■	■	■
	COM060 communication module																																	■	■	■
	Voltage tap for metering function																																		■	■
	External current transformer for N conductor																																			■
	EFB300 external function box																																			

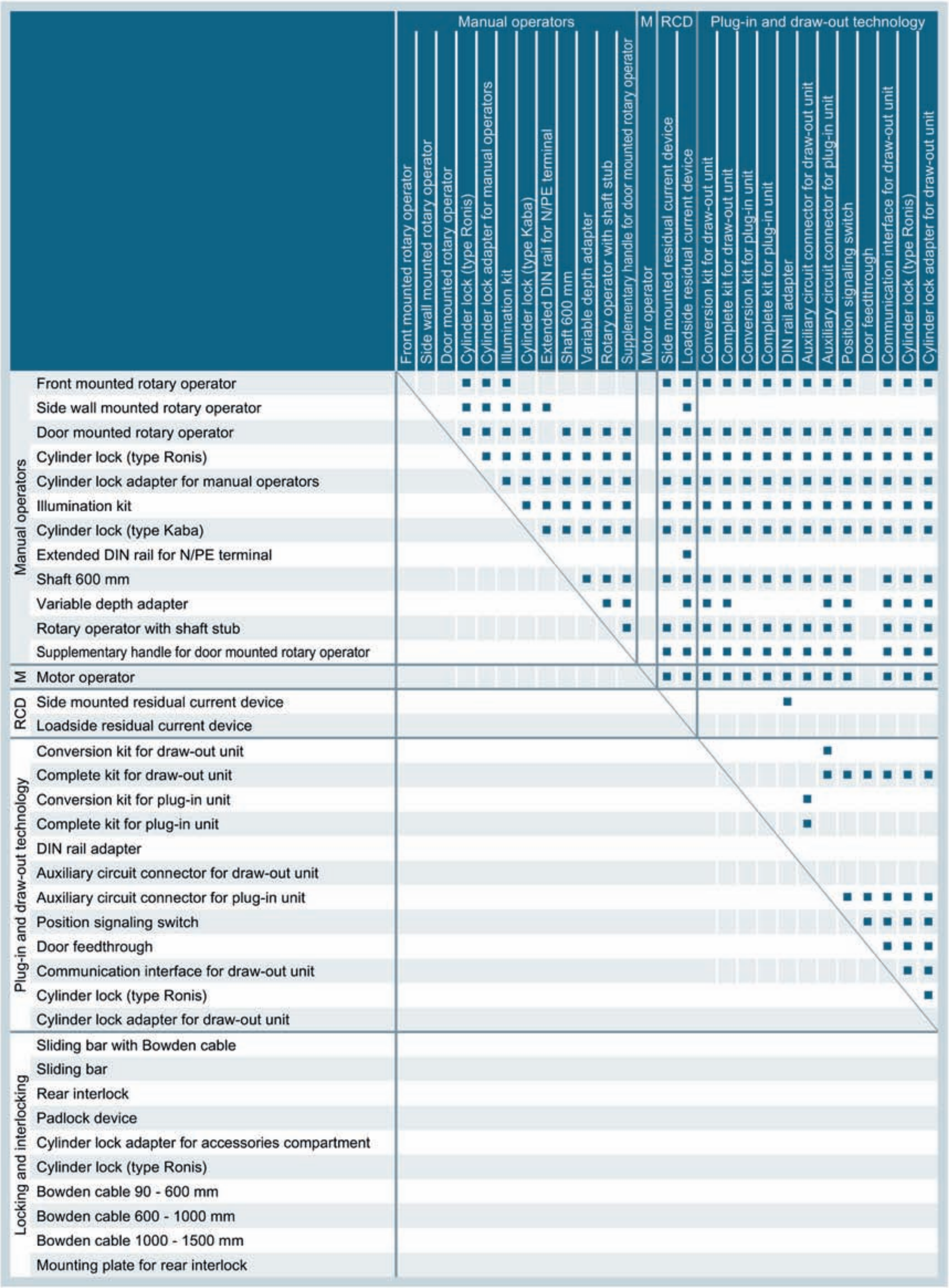

		Manual operators												M	RCD		Plug-in and draw-out technology											
		Front mounted rotary operator	Side wall mounted rotary operator	Door mounted rotary operator	Cylinder lock (type Ronis)	Cylinder lock adapter for manual operators	Illumination kit	Cylinder lock (type Kaba)	Extended DIN rail for N/PE terminal	Shaft 600 mm	Variable depth adapter	Rotary operator with shaft stub	Supplementary handle for door mounted rotary operator	Motor operator	Side mounted residual current device	Loadside residual current device	Conversion kit for draw-out unit	Complete kit for draw-out unit	Conversion kit for plug-in unit	Complete kit for plug-in unit	DIN rail adapter	Auxiliary circuit connector for draw-out unit	Auxiliary circuit connector for plug-in unit	Position signaling switch	Door feedthrough	Communication interface for draw-out unit	Cylinder lock (type Ronis)	Cylinder lock adapter for draw-out unit
Manual operators	Front mounted rotary operator				■	■	■								■	■	■	■	■	■	■	■	■	■		■	■	■
	Side wall mounted rotary operator				■	■	■	■	■							■												
	Door mounted rotary operator				■	■	■	■		■	■	■	■		■	■	■	■	■	■	■	■	■	■	■	■	■	■
	Cylinder lock (type Ronis)					■	■	■	■	■	■	■	■		■	■	■	■	■	■	■	■	■	■	■	■	■	■
	Cylinder lock adapter for manual operators						■	■	■	■	■	■	■		■	■	■	■	■	■	■	■	■	■	■	■	■	■
	Illumination kit							■	■	■	■	■	■		■	■	■	■	■	■	■	■	■	■	■	■	■	■
	Cylinder lock (type Kaba)								■	■	■	■	■		■	■	■	■	■	■	■	■	■	■	■	■	■	■
	Extended DIN rail for N/PE terminal															■												
	Shaft 600 mm										■	■	■		■	■	■	■	■	■	■	■	■	■		■	■	■
	Variable depth adapter											■	■			■	■	■					■	■		■	■	■
	Rotary operator with shaft stub												■		■	■	■	■	■	■	■	■	■	■		■	■	■
	Supplementary handle for door mounted rotary operator														■	■	■	■	■	■	■	■	■	■		■	■	■
M	Motor operator														■	■	■	■	■	■	■	■	■	■		■	■	■
RCD	Side mounted residual current device																				■							
	Loadside residual current device																											
Plug-in and draw-out technology	Conversion kit for draw-out unit																						■					
	Complete kit for draw-out unit																						■	■	■	■	■	■
	Conversion kit for plug-in unit																					■						
	Complete kit for plug-in unit																					■						
	DIN rail adapter																											
	Auxiliary circuit connector for draw-out unit																											
	Auxiliary circuit connector for plug-in unit																							■	■	■	■	■
	Position signaling switch																								■	■	■	■
	Door feedthrough																									■	■	■
	Communication interface for draw-out unit																										■	■
	Cylinder lock (type Ronis)																											■
	Cylinder lock adapter for draw-out unit																											
Locking and interlocking	Sliding bar with Bowden cable																											
	Sliding bar																											
	Rear interlock																											
	Padlock device																											
	Cylinder lock adapter for accessories compartment																											
	Cylinder lock (type Ronis)																											
	Bowden cable 90 - 600 mm																											
	Bowden cable 600 - 1000 mm																											
	Bowden cable 1000 - 1500 mm																											
	Mounting plate for rear interlock																											

		Locking and interlocking										Misc.		Connection technology																		Communication				
		Sliding bar with Bowden cable	Sliding bar	Rear interlock	Padlock device	Cylinder lock adapter for accessories compartment	Cylinder lock (type Ronis)	Bowden cable 90 - 600 mm	Bowden cable 600 - 1000 mm	Bowden cable 1000 - 1500 mm	Mounting plate for rear interlock	Mounting screw kit	Handle extension	Rear terminal flat	Rear connecting studs	Lug terminal, right-angled	Insulating plate	Insulating plate, broadened	Lug terminal	Front connection bars extended	Front connection bars broadened	Front connection bars edgewise	Box terminal	Circular conductor terminal	Circular conductor terminal, large	Circular conductor terminal, 2 cables	Circular conductor terminal, 6 cables	Phase barriers	Terminal cover, extended	Terminal cover, short	Terminal cover, broadened	24 V module	COM060 communication module	Voltage tap for metering function	External current transformer for N conductor	EFB300 external function box
Manual operators	Front mounted rotary operator			■				■	■	■	■	■	■	■	■	■	■	■	■	■	■	■	■	■	■	■	■	■	■	■	■	■	■	■	■	■
	Side wall mounted rotary operator							■	■	■		■	■	■	■	■	■	■	■	■	■	■	■	■	■	■	■	■	■	■	■	■	■	■	■	■
	Door mounted rotary operator			■				■	■	■	■	■	■	■	■	■	■	■	■	■	■	■	■	■	■	■	■	■	■	■	■	■	■	■	■	■
	Cylinder lock (type Ronis)			■				■	■	■	■	■	■	■	■	■	■	■	■	■	■	■	■	■	■	■	■	■	■	■	■	■	■	■	■	■
	Cylinder lock adapter for manual operators			■				■	■	■	■	■	■	■	■	■	■	■	■	■	■	■	■	■	■	■	■	■	■	■	■	■	■	■	■	■
	Illumination kit			■				■	■	■	■	■	■	■	■	■	■	■	■	■	■	■	■	■	■	■	■	■	■	■	■	■	■	■	■	■
	Cylinder lock (type Kaba)			■				■	■	■	■	■	■	■	■	■	■	■	■	■	■	■	■	■	■	■	■	■	■	■	■	■	■	■	■	■
	Extended DIN rail for N/PE terminal							■	■	■		■	■	■	■	■	■	■	■	■	■	■	■	■	■	■	■	■	■	■	■	■	■	■	■	■
	Shaft 600 mm			■				■	■	■	■	■	■	■	■	■	■	■	■	■	■	■	■	■	■	■	■	■	■	■	■	■	■	■	■	■
	Variable depth adapter			■				■	■	■	■	■	■	■	■	■	■	■	■	■	■	■	■	■	■	■	■	■	■	■	■	■	■	■	■	■
	Rotary operator with shaft stub			■				■	■	■	■	■	■	■	■	■	■	■	■	■	■	■	■	■	■	■	■	■	■	■	■	■	■	■	■	■
	Supplementary handle for door mounted rotary operator			■				■	■	■	■	■	■	■	■	■	■	■	■	■	■	■	■	■	■	■	■	■	■	■	■	■	■	■	■	■
M	Motor operator			■				■	■	■	■	■	■	■	■	■	■	■	■	■	■	■	■	■	■	■	■	■	■	■	■	■	■	■	■	■
RCD	Side mounted residual current device	■			■	■	■	■	■	■		■	■	■	■	■	■	■	■	■	■	■	■	■	■	■	■	■	■	■	■	■	■	■	■	■
	Loadside residual current device	■	■	■	■	■	■	■	■	■	■	■	■	■	■	■	■	■	■	■	■	■	■	■	■	■	■	■	■	■	■	■	■	■	■	■
Plug-in and draw-out technology	Conversion kit for draw-out unit	■		■	■	■	■	■	■	■	■	■		■	■	■	■	■	■	■	■	■	■	■	■	■	■	■	■	■	■	■	■	■	■	■
	Complete kit for draw-out unit	■		■	■	■	■	■	■	■	■	■		■	■	■	■	■	■	■	■	■	■	■	■	■	■	■	■	■	■	■	■	■	■	■
	Conversion kit for plug-in unit	■	■	■	■	■	■	■	■	■	■	■	■	■	■	■	■	■	■	■	■	■	■	■	■	■	■	■	■	■	■	■	■	■	■	■
	Complete kit for plug-in unit	■	■	■	■	■	■	■	■	■	■	■	■	■	■	■	■	■	■	■	■	■	■	■	■	■	■	■	■	■	■	■	■	■	■	■
	DIN rail adapter	■	■		■	■	■	■	■	■		■	■	■	■	■	■	■	■	■	■	■	■	■	■	■	■	■	■	■	■	■	■	■	■	■
	Auxiliary circuit connector for draw-out unit	■	■	■	■	■	■	■	■	■	■	■	■	■	■	■	■	■	■	■	■	■	■	■	■	■	■	■	■	■	■	■	■	■	■	■
	Auxiliary circuit connector for plug-in unit	■		■	■	■	■	■	■	■	■	■	■	■	■	■	■	■	■	■	■	■	■	■	■	■	■	■	■	■	■	■	■	■	■	■
	Position signaling switch	■		■	■	■	■	■	■	■	■	■	■	■	■	■	■	■	■	■	■	■	■	■	■	■	■	■	■	■	■	■	■	■	■	■
	Door feedthrough			■				■	■	■	■	■	■	■	■	■	■	■	■	■	■	■	■	■	■	■	■	■	■	■	■	■	■	■	■	■
	Communication interface for draw-out unit	■		■	■	■	■	■	■	■	■	■	■	■	■	■	■	■	■	■	■	■	■	■	■	■	■	■	■	■	■	■	■	■	■	■
	Cylinder lock (type Ronis)	■		■	■	■	■	■	■	■	■	■	■	■	■	■	■	■	■	■	■	■	■	■	■	■	■	■	■	■	■	■	■	■	■	■
	Cylinder lock adapter for draw-out unit	■		■	■	■	■	■	■	■	■	■	■	■	■	■	■	■	■	■	■	■	■	■	■	■	■	■	■	■	■	■	■	■	■	■
Locking and interlocking	Sliding bar with Bowden cable							■	■	■		■	■	■	■	■	■	■	■	■	■	■	■	■	■	■	■	■	■	■	■	■	■	■	■	■
	Sliding bar											■	■	■	■	■	■	■	■	■	■	■	■	■	■	■	■	■	■	■	■	■	■	■	■	■
	Rear interlock				■	■	■				■	■	■	■	■	■	■	■	■	■	■	■	■	■	■	■	■	■	■	■	■	■	■	■	■	■
	Padlock device							■	■	■	■	■	■	■	■	■	■	■	■	■	■	■	■	■	■	■	■	■	■	■	■	■	■	■	■	■
	Cylinder lock adapter for accessories compartment						■	■	■	■	■	■	■	■	■	■	■	■	■	■	■	■	■	■	■	■	■	■	■	■	■			■	■	■
	Cylinder lock (type Ronis)							■	■	■	■	■	■	■	■	■	■	■	■	■	■	■	■	■	■	■	■	■	■	■	■			■	■	■
	Bowden cable 90 - 600 mm											■	■	■	■	■	■	■	■	■	■	■	■	■	■	■	■	■	■	■	■	■	■	■	■	■
	Bowden cable 600 - 1000 mm											■	■	■	■	■	■	■	■	■	■	■	■	■	■	■	■	■	■	■	■	■	■	■	■	■
	Bowden cable 1000 - 1500 mm											■	■	■	■	■	■	■	■	■	■	■	■	■	■	■	■	■	■	■	■	■	■	■	■	■
	Mounting plate for rear interlock											■	■	■	■	■	■	■	■	■	■	■	■	■	■	■	■	■	■	■	■	■	■	■	■	■

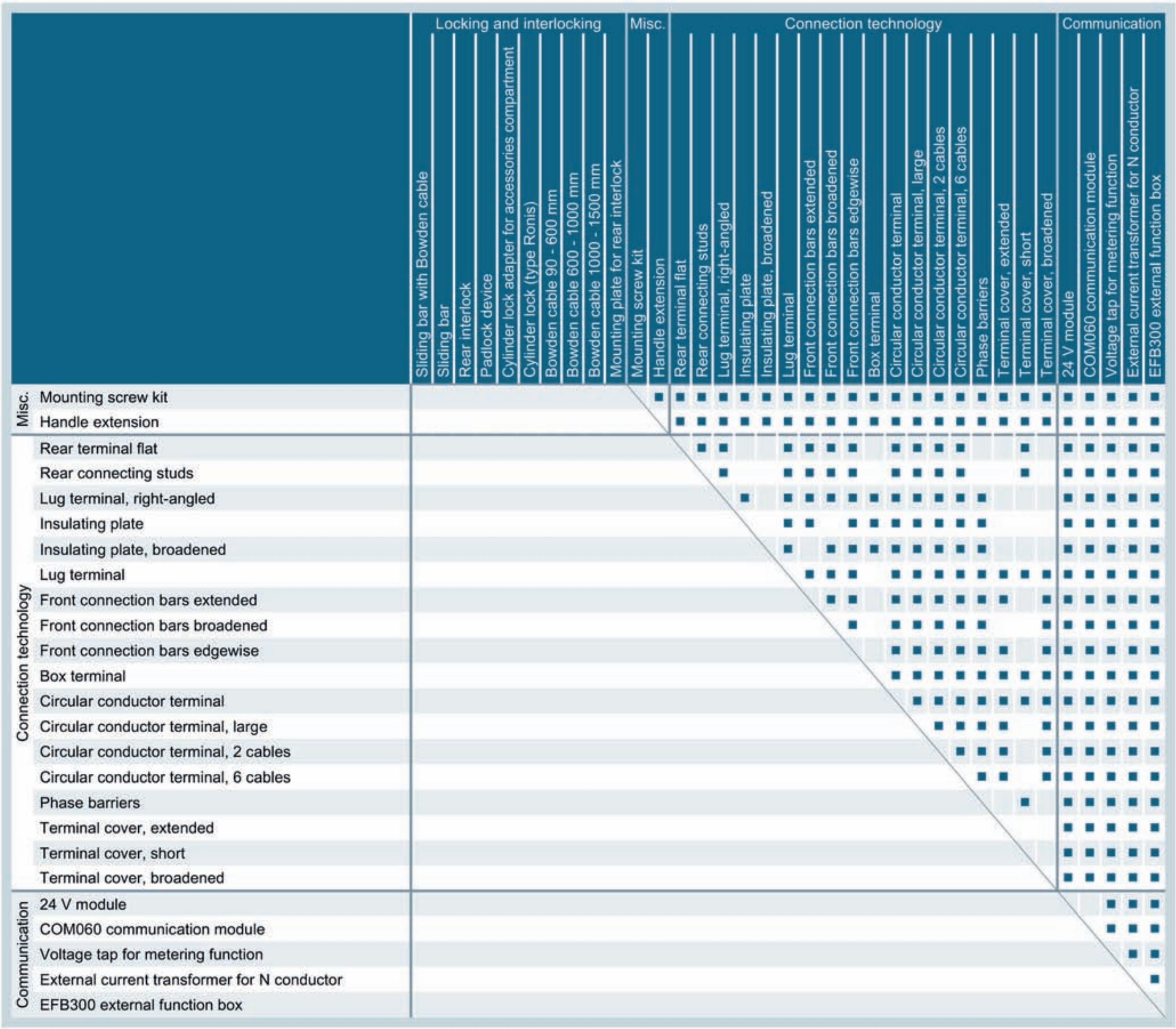

		Locking and interlocking										Misc.		Connection technology																		Communication				
		Sliding bar with Bowden cable	Sliding bar	Rear interlock	Padlock device	Cylinder lock adapter for accessories compartment	Cylinder lock (type Ronis)	Bowden cable 90 - 600 mm	Bowden cable 600 - 1000 mm	Bowden cable 1000 - 1500 mm	Mounting plate for rear interlock	Mounting screw kit	Handle extension	Rear terminal flat	Rear connecting studs	Lug terminal, right-angled	Insulating plate	Insulating plate, broadened	Lug terminal	Front connection bars extended	Front connection bars broadened	Front connection bars edgewise	Box terminal	Circular conductor terminal	Circular conductor terminal, large	Circular conductor terminal, 2 cables	Circular conductor terminal, 6 cables	Phase barriers	Terminal cover, extended	Terminal cover, short	Terminal cover, broadened	24 V module	COM060 communication module	Voltage tap for metering function	External current transformer for N conductor	EFB300 external function box
Misc.	Mounting screw kit												■	■	■	■	■	■	■	■	■	■	■	■	■	■	■	■	■	■	■	■	■	■	■	■
	Handle extension													■	■	■	■	■	■	■	■	■	■	■	■	■	■	■	■	■	■	■	■	■	■	■
Connection technology	Rear terminal flat														■	■			■	■	■	■		■	■	■	■			■		■	■	■	■	■
	Rear connecting studs															■			■	■	■	■		■	■	■	■			■		■	■	■	■	■
	Lug terminal, right-angled																■		■	■	■	■	■	■	■	■	■	■				■	■	■	■	■
	Insulating plate																		■	■		■	■	■	■	■	■	■				■	■	■	■	■
	Insulating plate, broadened																		■		■	■	■	■	■	■	■	■				■	■	■	■	■
	Lug terminal																			■	■	■		■	■	■	■	■	■	■	■	■	■	■	■	■
	Front connection bars extended																				■	■		■	■	■	■	■	■		■	■	■	■	■	■
	Front connection bars broadened																					■		■	■	■	■	■			■	■	■	■	■	■
	Front connection bars edgewise																							■	■	■	■	■	■		■	■	■	■	■	■
	Box terminal																							■	■	■	■	■	■	■	■	■	■	■	■	■
	Circular conductor terminal																								■	■	■	■	■	■	■	■	■	■	■	■
	Circular conductor terminal, large																									■	■	■	■		■	■	■	■	■	■
	Circular conductor terminal, 2 cables																										■	■	■		■	■	■	■	■	■
	Circular conductor terminal, 6 cables																											■	■		■	■	■	■	■	■
	Phase barriers																													■		■	■	■	■	■
	Terminal cover, extended																															■	■	■	■	■
	Terminal cover, short																															■	■	■	■	■
	Terminal cover, broadened																															■	■	■	■	■
Communication	24 V module																																	■	■	■
	COM060 communication module																																	■	■	■
	Voltage tap for metering function																																		■	■
	External current transformer for N conductor																																			■
	EFB300 external function box																																			

4.2 Internal accessories

4.2.1 Mounting locations on 3VA molded case circuit breakers

The portfolio of internal accessories includes:

- Auxiliary switches
- Alarm switches
- Auxiliary releases
- COM060 communication module
- 24 V module
- Cylinder lock (type Ronis)

The following tables show the alternative mounting locations for internal accessories, which depend on the size and pole number of the circuit breaker.

3VA1 molded case circuit breakers:

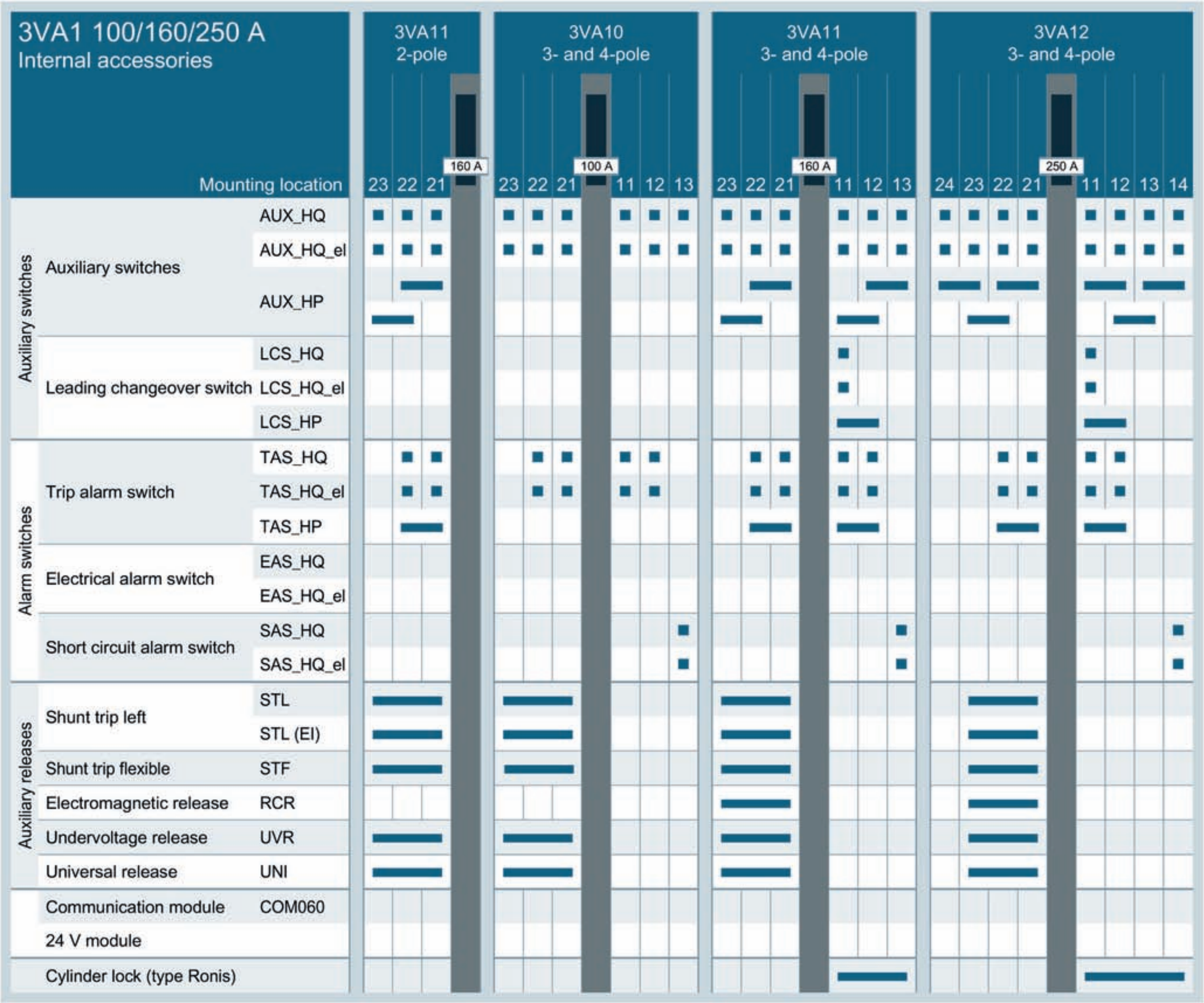

3VA1 100/160/250 A Internal accessories			3VA11 2-pole				3VA10 3- and 4-pole							3VA11 3- and 4-pole							3VA12 3- and 4-pole								
		Mounting location	23	22	21	160 A	23	22	21	100 A	11	12	13	23	22	21	160 A	11	12	13	24	23	22	21	250 A	11	12	13	14
Auxiliary switches	Auxiliary switches	AUX_HQ	■	■	■		■	■	■		■	■	■	■	■	■		■	■	■	■	■	■	■		■	■	■	■
		AUX_HQ_el	■	■	■		■	■	■		■	■	■	■	■	■		■	■	■	■	■	■	■		■	■	■	■
		AUX_HP		▬	▬										▬	▬			▬	▬	▬	▬	▬	▬		▬	▬	▬	▬
			▬	▬										▬	▬			▬	▬			▬	▬				▬	▬	
	Leading changeover switch	LCS_HQ																■								■			
		LCS_HQ_el																■								■			
		LCS_HP																▬	▬							▬	▬		
Alarm switches	Trip alarm switch	TAS_HQ		■	■			■	■		■	■			■	■		■	■				■	■		■	■		
		TAS_HQ_el		■	■			■	■		■	■			■	■		■	■				■	■		■	■		
		TAS_HP		▬	▬										▬	▬		▬	▬				▬	▬		▬	▬		
	Electrical alarm switch	EAS_HQ																											
		EAS_HQ_el																											
	Short circuit alarm switch	SAS_HQ											■							■									■
		SAS_HQ_el											■							■									■
Auxiliary releases	Shunt trip left	STL	▬	▬	▬		▬	▬	▬					▬	▬	▬						▬	▬	▬					
		STL (EI)	▬	▬	▬		▬	▬	▬					▬	▬	▬						▬	▬	▬					
	Shunt trip flexible	STF	▬	▬	▬		▬	▬	▬					▬	▬	▬						▬	▬	▬					
	Electromagnetic release	RCR												▬	▬	▬						▬	▬	▬					
	Undervoltage release	UVR	▬	▬	▬		▬	▬	▬					▬	▬	▬						▬	▬	▬					
	Universal release	UNI	▬	▬	▬		▬	▬	▬					▬	▬	▬						▬	▬	▬					
	Communication module	COM060																											
	24 V module																												
	Cylinder lock (type Ronis)																	▬	▬	▬						▬	▬	▬	▬

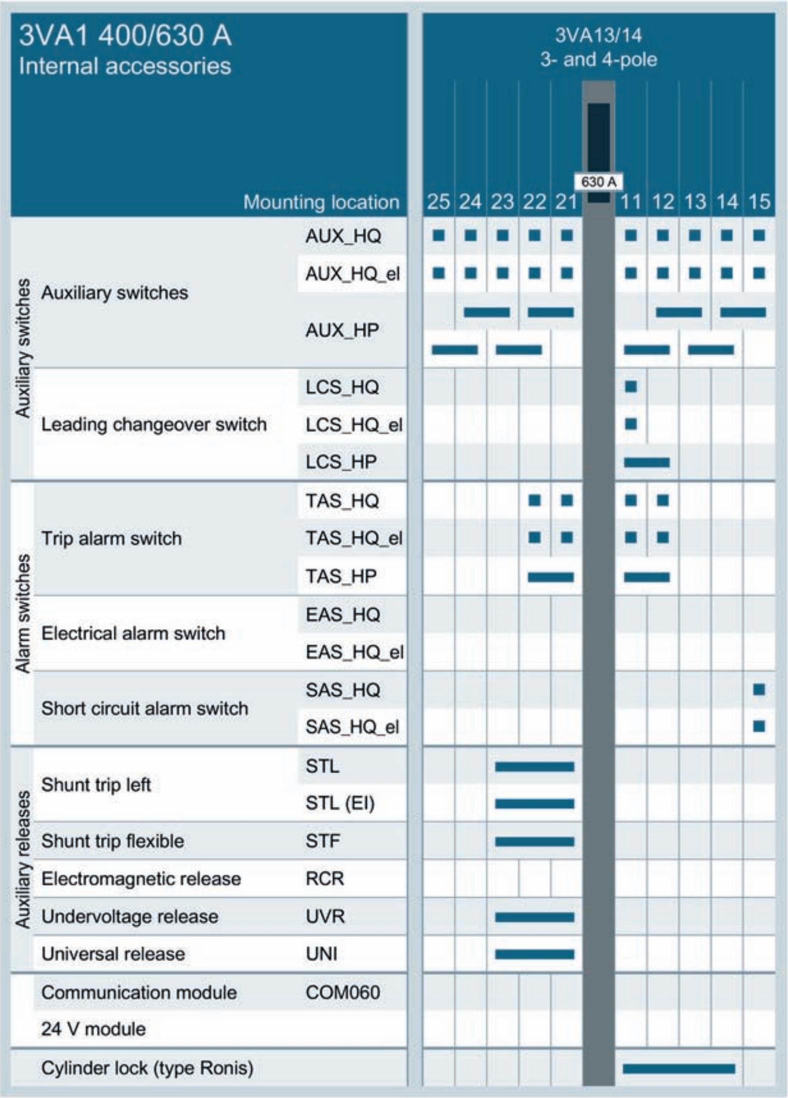

3VA1 400/630 A Internal accessories			3VA13/14 3- and 4-pole										
		Mounting location	25	24	23	22	21	630 A	11	12	13	14	15
Auxiliary switches	Auxiliary switches	AUX_HQ	■	■	■	■	■		■	■	■	■	■
		AUX_HQ_el	■	■	■	■	■		■	■	■	■	■
		AUX_HP		▬	▬	▬	▬			▬	▬	▬	▬
			▬	▬	▬	▬			▬	▬	▬	▬	
	Leading changeover switch	LCS_HQ							■				
		LCS_HQ_el							■				
		LCS_HP							▬	▬			
Alarm switches	Trip alarm switch	TAS_HQ				■	■		■	■			
		TAS_HQ_el				■	■		■	■			
		TAS_HP				▬	▬		▬	▬			
	Electrical alarm switch	EAS_HQ											
		EAS_HQ_el											
	Short circuit alarm switch	SAS_HQ											■
		SAS_HQ_el											■
Auxiliary releases	Shunt trip left	STL			▬	▬	▬						
		STL (EI)			▬	▬	▬						
	Shunt trip flexible	STF			▬	▬	▬						
	Electromagnetic release	RCR											
	Undervoltage release	UVR			▬	▬	▬						
	Universal release	UNI			▬	▬	▬						
	Communication module	COM060											
	24 V module												
	Cylinder lock (type Ronis)								▬	▬	▬	▬	

3VA2 molded case circuit breakers:

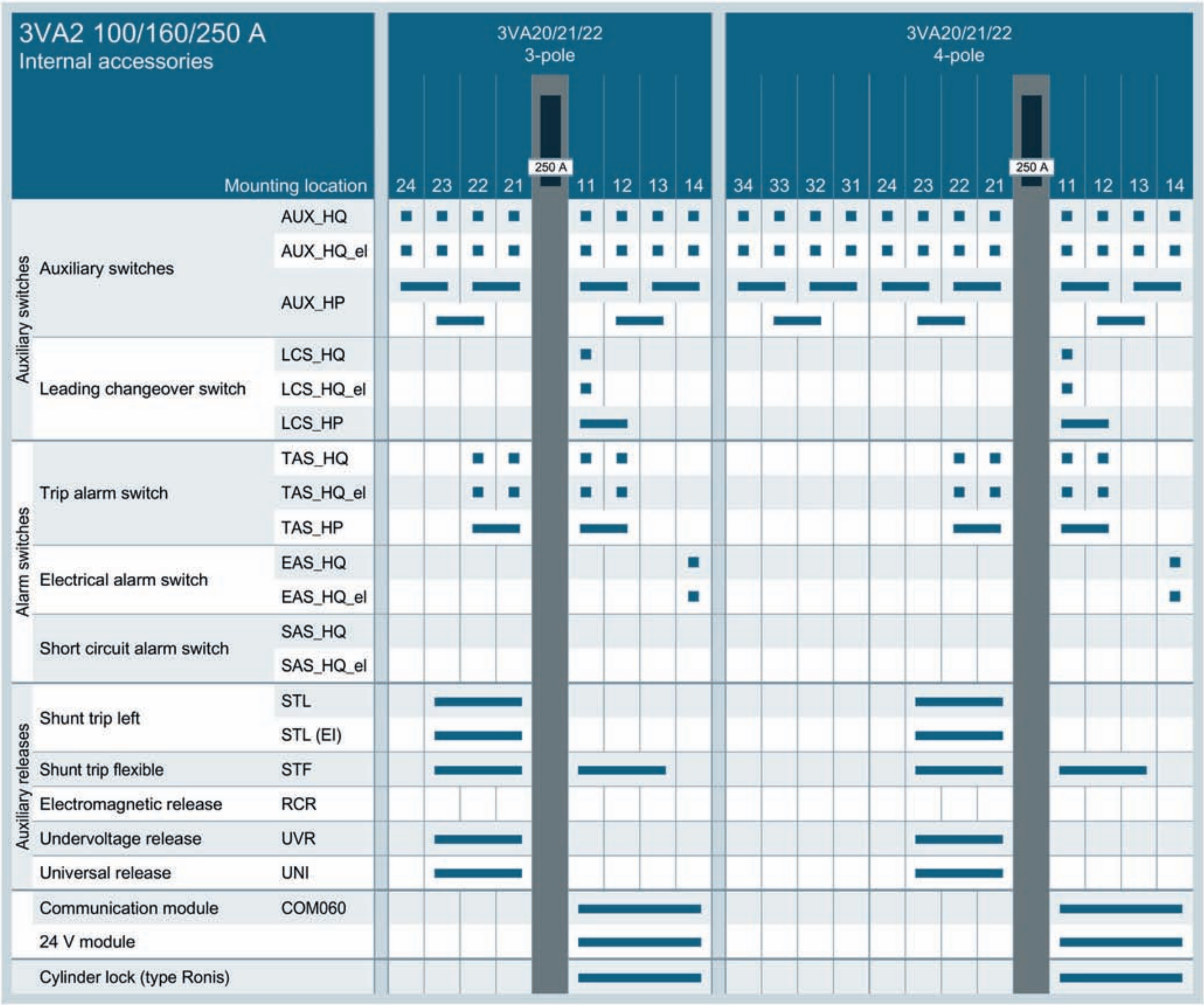

3VA2 100/160/250 A Internal accessories			3VA20/21/22 3-pole									3VA20/21/22 4-pole												
		Mounting location	24	23	22	21	250 A	11	12	13	14	34	33	32	31	24	23	22	21	250 A	11	12	13	14
Auxiliary switches	Auxiliary switches	AUX_HQ	■	■	■	■		■	■	■	■	■	■	■	■	■	■	■	■		■	■	■	■
		AUX_HQ_el	■	■	■	■		■	■	■	■	■	■	■	■	■	■	■	■		■	■	■	■
		AUX_HP	▬	▬	▬	▬		▬	▬	▬	▬	▬	▬	▬	▬	▬	▬	▬	▬		▬	▬	▬	▬
				▬	▬				▬	▬			▬	▬			▬	▬				▬	▬	
	Leading changeover switch	LCS_HQ						■													■			
		LCS_HQ_el						■													■			
		LCS_HP						▬	▬												▬	▬		
Alarm switches	Trip alarm switch	TAS_HQ			■	■		■	■									■	■		■	■		
		TAS_HQ_el			■	■		■	■									■	■		■	■		
		TAS_HP			▬	▬		▬	▬									▬	▬		▬	▬		
	Electrical alarm switch	EAS_HQ									■													■
		EAS_HQ_el									■													■
	Short circuit alarm switch	SAS_HQ																						
		SAS_HQ_el																						
Auxiliary releases	Shunt trip left	STL		▬	▬	▬											▬	▬	▬					
		STL (EI)		▬	▬	▬											▬	▬	▬					
	Shunt trip flexible	STF		▬	▬	▬		▬	▬	▬							▬	▬	▬		▬	▬	▬	
	Electromagnetic release	RCR																						
	Undervoltage release	UVR		▬	▬	▬											▬	▬	▬					
	Universal release	UNI		▬	▬	▬											▬	▬	▬					
	Communication module	COM060						▬	▬	▬	▬										▬	▬	▬	▬
	24 V module							▬	▬	▬	▬										▬	▬	▬	▬
	Cylinder lock (type Ronis)							▬	▬	▬	▬										▬	▬	▬	▬

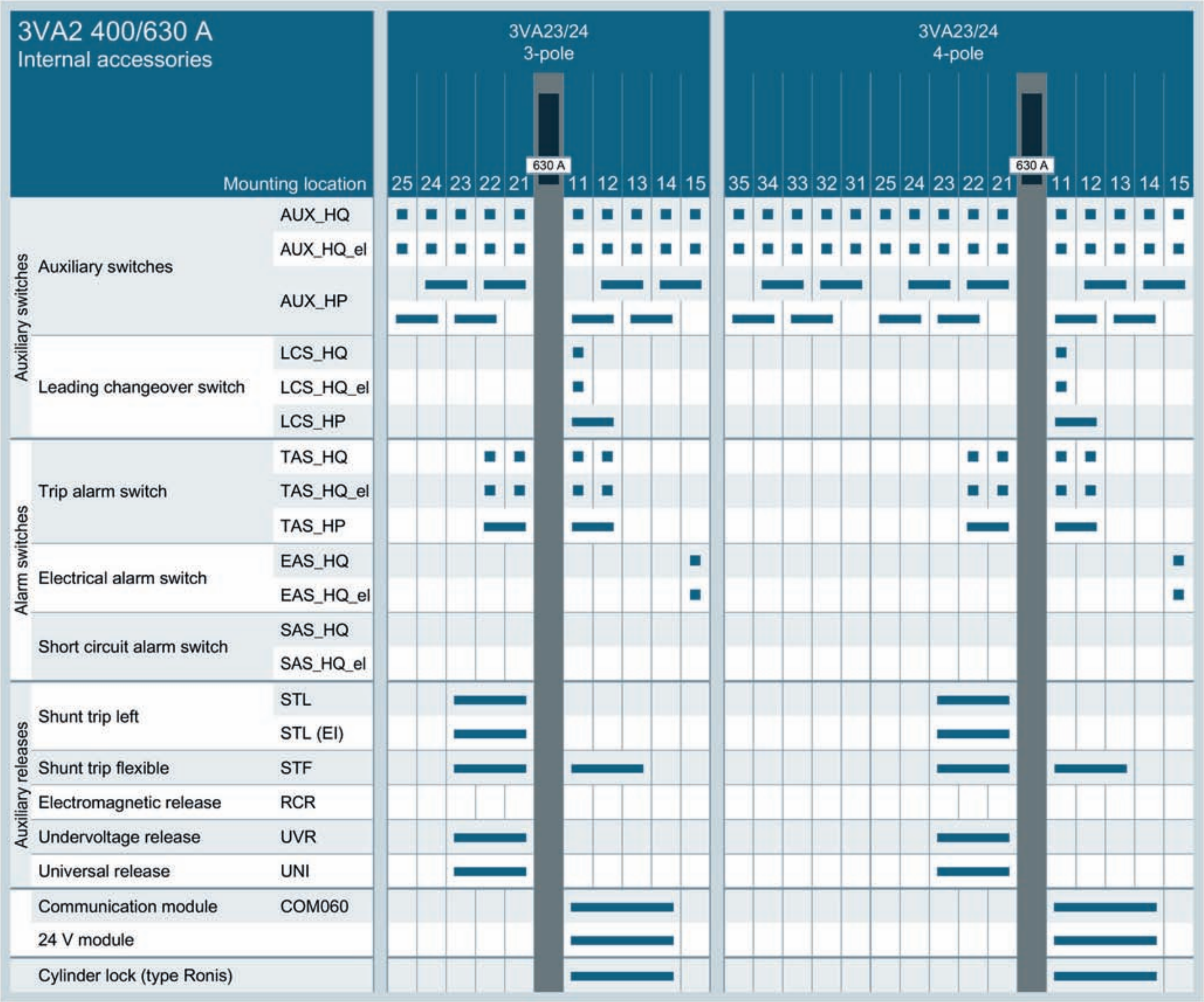

3VA2 400/630 A Internal accessories			3VA23/24 3-pole											3VA23/24 4-pole															
		Mounting location	25	24	23	22	21	630 A	11	12	13	14	15	35	34	33	32	31	25	24	23	22	21	630 A	11	12	13	14	15
Auxiliary switches	Auxiliary switches	AUX_HQ	■	■	■	■	■		■	■	■	■	■	■	■	■	■	■	■	■	■	■	■		■	■	■	■	■
		AUX_HQ_el	■	■	■	■	■		■	■	■	■	■	■	■	■	■	■	■	■	■	■	■		■	■	■	■	■
		AUX_HP		▬	▬	▬	▬			▬	▬	▬	▬		▬	▬	▬	▬		▬	▬	▬	▬			▬	▬	▬	▬
			▬	▬	▬	▬			▬	▬	▬	▬		▬	▬	▬	▬		▬	▬	▬	▬			▬	▬	▬	▬	
	Leading changeover switch	LCS_HQ							■																■				
		LCS_HQ_el							■																■				
		LCS_HP							▬	▬															▬	▬			
Alarm switches	Trip alarm switch	TAS_HQ				■	■		■	■												■	■		■	■			
		TAS_HQ_el				■	■		■	■												■	■		■	■			
		TAS_HP				▬	▬		▬	▬												▬	▬		▬	▬			
	Electrical alarm switch	EAS_HQ											■																■
		EAS_HQ_el											■																■
	Short circuit alarm switch	SAS_HQ																											
		SAS_HQ_el																											
Auxiliary releases	Shunt trip left	STL			▬	▬	▬														▬	▬	▬						
		STL (EI)			▬	▬	▬														▬	▬	▬						
	Shunt trip flexible	STF			▬	▬	▬		▬	▬	▬										▬	▬	▬		▬	▬	▬		
	Electromagnetic release	RCR																											
	Undervoltage release	UVR			▬	▬	▬														▬	▬	▬						
	Universal release	UNI			▬	▬	▬														▬	▬	▬						
	Communication module	COM060							▬	▬	▬	▬													▬	▬	▬	▬	
	24 V module								▬	▬	▬	▬													▬	▬	▬	▬	
	Cylinder lock (type Ronis)								▬	▬	▬	▬													▬	▬	▬	▬	

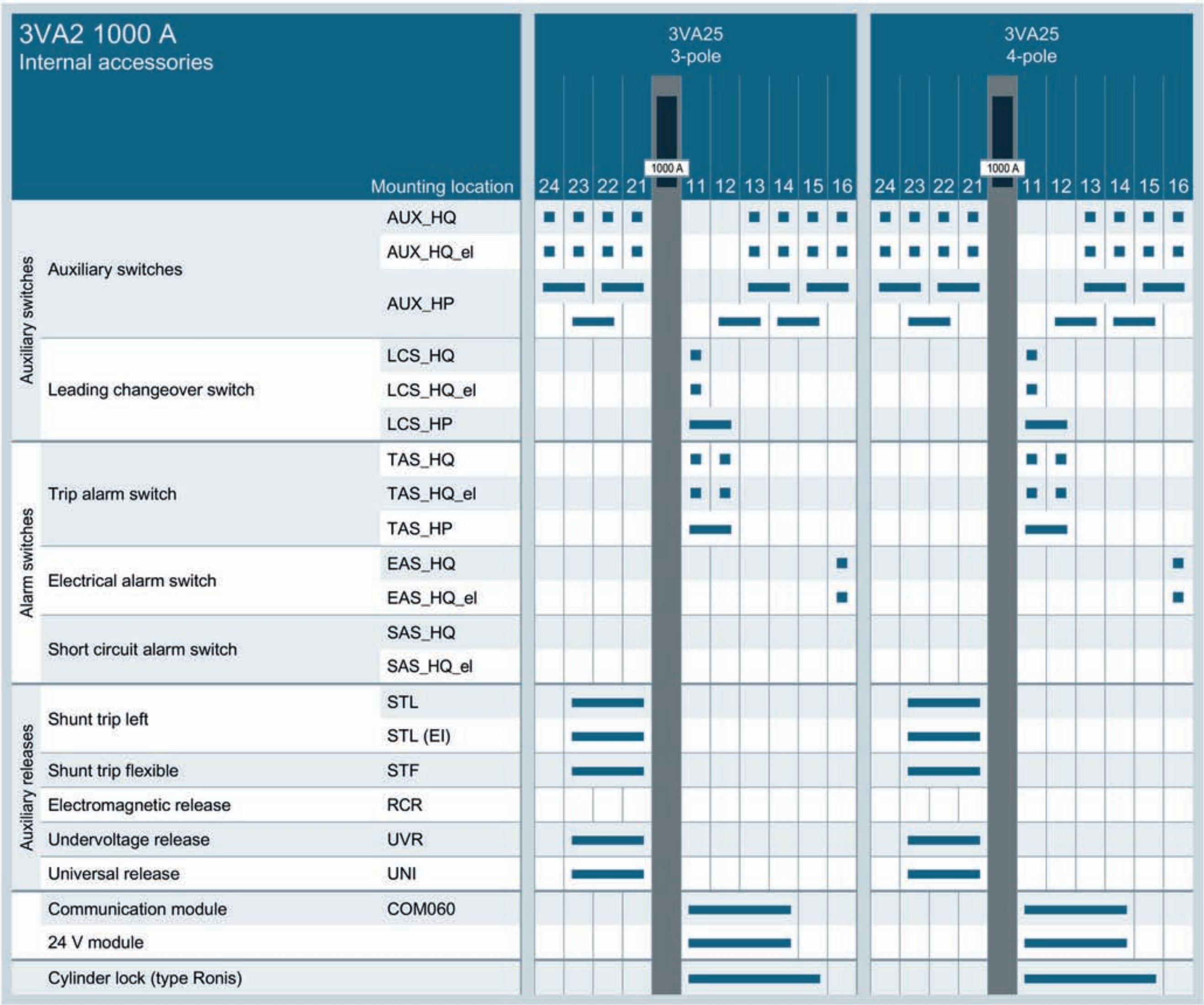

3VA2 1000 A Internal accessories			3VA25 3-pole											3VA25 4-pole										
		Mounting location	24	23	22	21	1000 A	11	12	13	14	15	16	24	23	22	21	1000 A	11	12	13	14	15	16
Auxiliary switches	Auxiliary switches	AUX_HQ	■	■	■	■				■	■	■	■	■	■	■	■				■	■	■	■
		AUX_HQ_el	■	■	■	■				■	■	■	■	■	■	■	■				■	■	■	■
		AUX_HP	▬	▬	▬	▬				▬	▬	▬	▬	▬	▬	▬	▬				▬	▬	▬	▬
				▬	▬				▬	▬	▬	▬			▬	▬				▬	▬	▬	▬	
	Leading changeover switch	LCS_HQ						■											■					
		LCS_HQ_el						■											■					
		LCS_HP						▬	▬										▬	▬				
Alarm switches	Trip alarm switch	TAS_HQ						■	■										■	■				
		TAS_HQ_el						■	■										■	■				
		TAS_HP						▬	▬										▬	▬				
	Electrical alarm switch	EAS_HQ											■											■
		EAS_HQ_el											■											■
	Short circuit alarm switch	SAS_HQ																						
		SAS_HQ_el																						
Auxiliary releases	Shunt trip left	STL		▬	▬	▬									▬	▬	▬							
		STL (El)		▬	▬	▬									▬	▬	▬							
	Shunt trip flexible	STF		▬	▬	▬									▬	▬	▬							
	Electromagnetic release	RCR																						
	Undervoltage release	UVR		▬	▬	▬									▬	▬	▬							
	Universal release	UNI		▬	▬	▬									▬	▬	▬							
	Communication module	COM060						▬	▬	▬	▬								▬	▬	▬	▬		
	24 V module							▬	▬	▬	▬								▬	▬	▬	▬		
	Cylinder lock (type Ronis)							▬	▬	▬	▬	▬							▬	▬	▬	▬	▬	

See also

Cylinder locks for locking the 3VA molded case circuit breaker (Page 365)

4.2.2 Auxiliary and alarm switches

The auxiliary and alarm switches for 3VA molded case circuit breakers belong to an integrated range of accessories. They can be installed in all sizes of all circuit breakers up to 1000 A.

The auxiliary and alarm switches can be very simply snapped into place and connected up in accessory compartments provided on the front panel of the unit to the left and right of the handle.

All auxiliary and alarm switches are designed as changeover contacts and therefore provide a high degree of flexibility for planning and installation purposes.

HQ and HP switches

The switches are available in versions HQ and HP. HQ switches are 7 mm wide, and HP switches 14 mm wide.

Both switch versions can be combined extremely flexibly in a molded case circuit breaker. This level of compatibility means that two HQ switches can be optionally installed in place of one HP switch.

HQ and HP switches have the same functionality, but differ in terms of the following features:

- Connection technology
  - HQ: One conductor per contact point
  - HP: Two conductors per contact point possible (loop-through)
- Key electrical data
  - HQ: max. 250 V; max. 6 A
  - HP: max. 600 V; max. 10 A

Individual key electrical data can be found at the end of this chapter.

All HQ switches are also available in an electronics-compatible version (HQ_el).

The electronics-compatible auxiliary switches (HQ_el) are specially optimized for switching small voltages and currents. They are therefore particularly useful for alarms in the vicinity of PLC controllers, for example.

The diagram below uses the example of an ET200S to illustrate the conventional method of connecting the electronics-compatible auxiliary switch AUX, the trip alarm switch TAS and the motor operator MO320 to a distributed I/O unit.

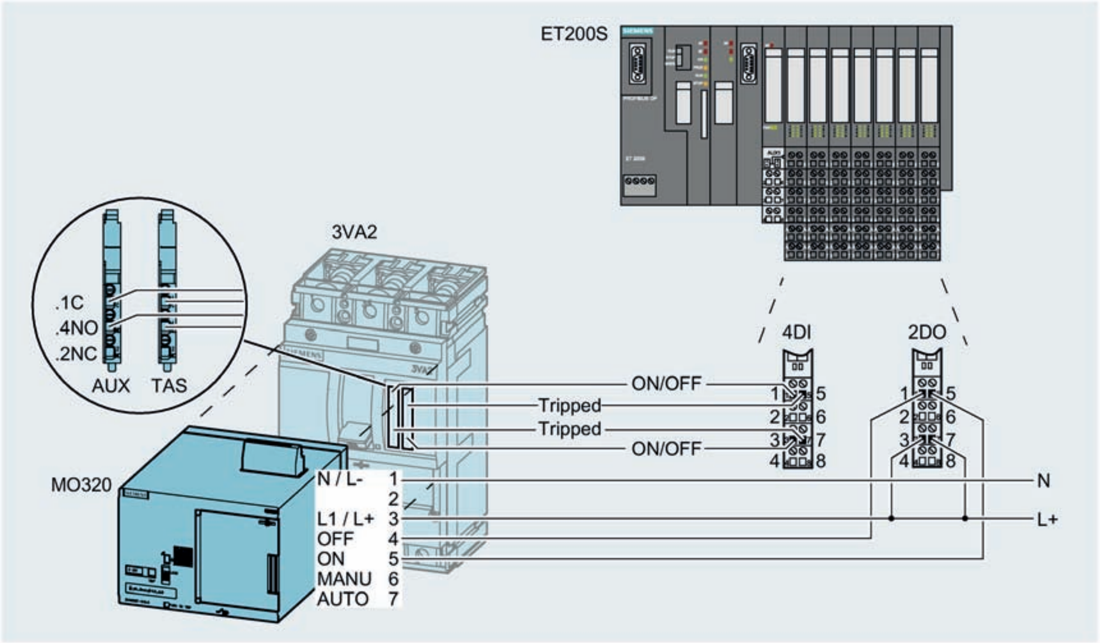

Further information about contact reliability can be found at the end of this chapter.

Auxiliary switches AUX

The purpose of auxiliary switches is to signal the position of the main contacts of the molded case circuit breaker. The contacts of the auxiliary switch open and close simultaneously with the main contacts of the molded case circuit breaker.

Leading changeover switches LCS

Leading changeover switches signal the opening of the main contacts with a lead time of 20 ms in advance of circuit breaker trips and can be used for load shedding, for example.

Trip alarm switches TAS

Trip alarm switches signal all types of molded case circuit breaker trip, regardless of the cause of the trip. The trip alarm switches are actuated whenever the molded case circuit breaker switches to the TRIP position.

Electrical alarm switches EAS

Electrical alarm switches are operated as soon as the main contacts of the molded case circuit breaker open in the event that the breaker is tripped by the ETU. They indicate the following conditions:

- Overload L and neutral conductor overload
- Short-circuit S, I
- Ground-fault tripping G
- Residual current device RCD820

The electrical alarm switch is not operated:

- When the breaker is tripped manually
  - PUSH TO TRIP
  - When the breaker is withdrawn from the plug-in/draw-out socket when the main contacts are closed
- When activated via an auxiliary release
  - Shunt trip STL, STL(EI), STF
  - Undervoltage release UVR
  - Universal release UNI

Electrical alarm switches are compatible only with 3VA2 molded case circuit breakers equipped with electronic trip units (ETU).

Short circuit alarm switches SAS

Short circuit alarm switches signal trips only if they have been initiated by a short circuit. These events are also indicated on the molded case circuit breaker.

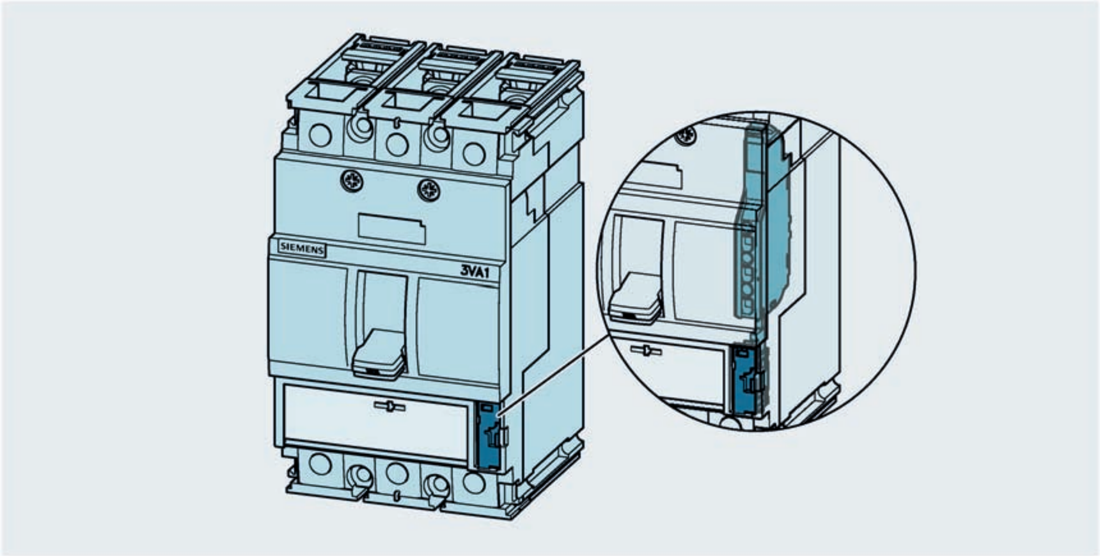

The trip must be reset by deliberate acknowledgement of the fault before the molded case circuit breaker is switched to ON again.

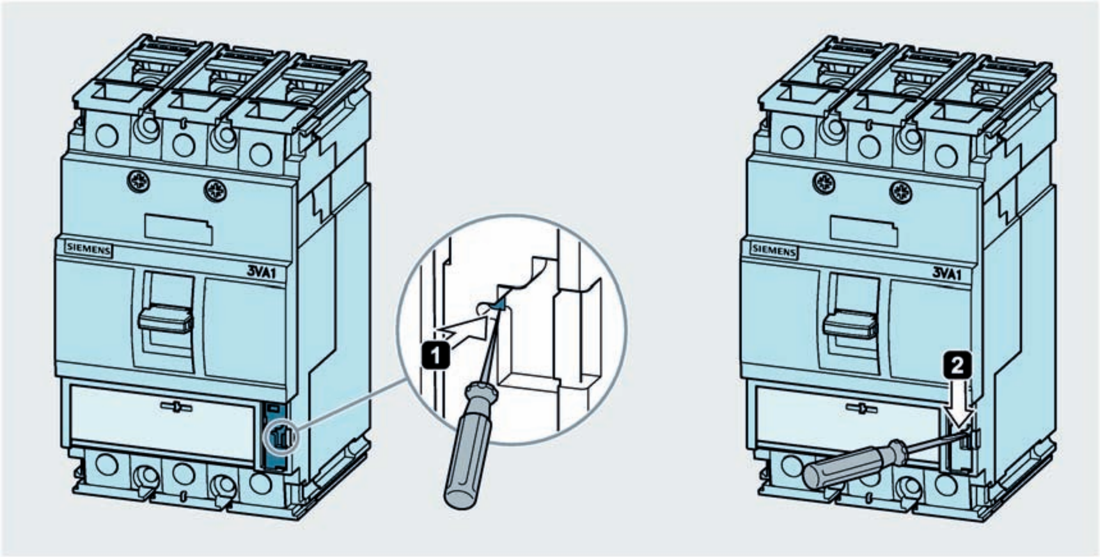

Short circuit alarm switches are only compatible with 3VA1 molded case circuit breakers. On breakers equipped with electronic trip units, the short circuit alarm function is performed by the electronic trip unit (ETU) and the EFB300 external function box.

4.2.3 Contact sequence diagrams

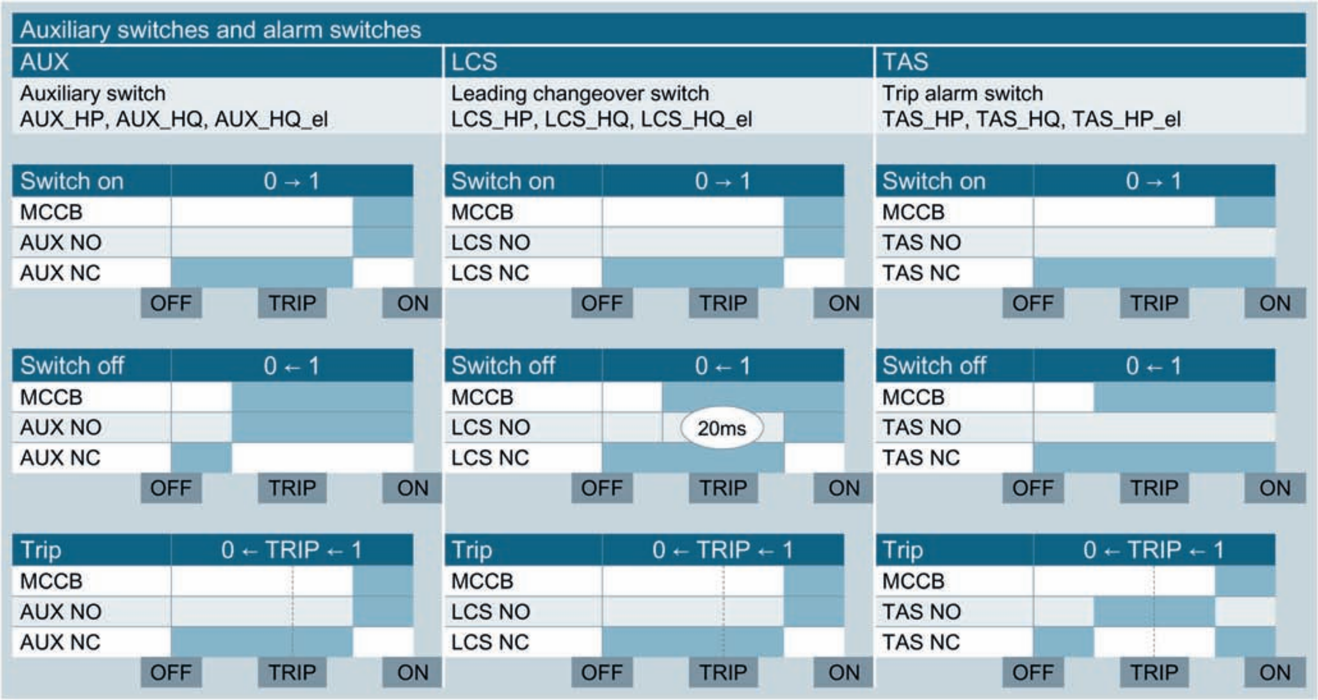

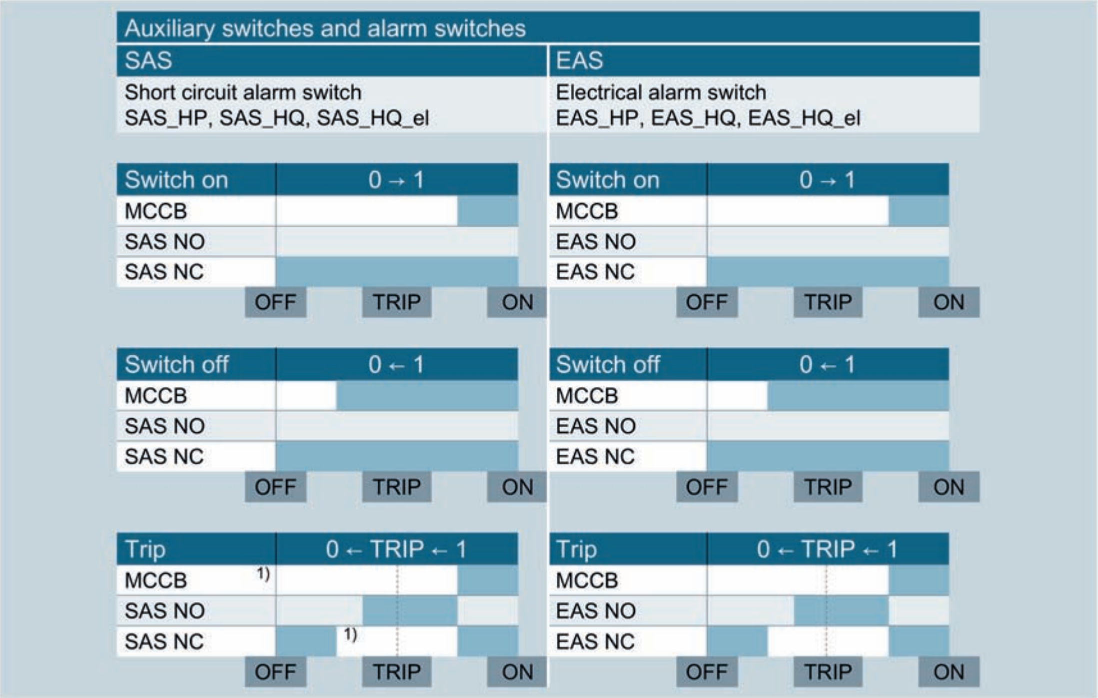

☐ Main contacts open   ▨ Auxiliary contacts open   ■ Contacts closed

---

[1] Manual reset by tool necessary after tripping
Automatic reset by motor operator MO320

4.2.4 Technical specifications of auxiliary and alarm switches

Technical specifications Auxiliary switches and alarm switches					HQ					HQ_el					HP		
					AUX	LCS	TAS	EAS	SAS	AUX	LCS	TAS	EAS	SAS	AUX	LCS	TAS
																	
Overall width				mm	7										14		
Graphical symbol					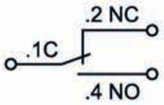												
Conductor cross-section	**solid/stranded/finely stranded with end sleeve** 	Screw-type terminal (per contact)			1 x (0.5 mm^2 - 1.5 mm^2)										2 x (0.75 mm^2 - 2.5 mm^2)		
		Screw-type terminal (per contact)			1 x (AWG20 - AWG16)										2 x (AWG18 - AWG14)		
	Finely stranded with insulated end sleeve 	Screw-type terminal (per contact)			1 x (0.5 mm^2 - 1.0 mm^2)										2 x (0.75 mm^2 - 1.0 mm^2)		
		Screw-type terminal (per contact)			1 x (AWG20 - AWG16)										2 x (AWG18 - AWG16)		
	Tightening torque (connecting cables)			Nm	$0.4^{+0.1}$												
	Stripped length 			mm	15												
Rated insulation voltage			U_i	V AC	690 Overvoltage category III Pollution degree 3												
Rated impulse withstand voltage			U_{imp}	kV	4										6		
Rated operational voltage		IEC 60947															
			U_e	V AC 50 Hz	240					24					600		
				V DC	250					24					250		
		UL / CSA															
			U_e	V AC 60 Hz	300					24					600		
				V DC	250					24					250		
Protective separation IEC 60947-1					Auxiliary current paths are protectively separated up to 500 V [1) 2)]												

[1)] Safe separation in the case of side-by-side construction of auxiliary switches and auxiliary releases only up to 440 V and in systems up to an impulse voltage withstand level of 4 kV

[2)] HP switches without adjacent switches; not in mounting locations 11 and 21 up to 690 V

Technical specifications Auxiliary switches and alarm switches				HQ	HQ_el	HP
				AUX LCS TAS EAS SAS	AUX LCS TAS EAS SAS	AUX LCS TAS
						
Conventional free-air thermal current		$I_{th} = I_e$	A	6	0.3	10
Rated making capacity			A	6	0.3	10
Rated operational current	AC-12	12 V	A	6	0.3	10
		24 V	A	6	0.3	10
		48 V	A	6		10
		125 V	A	6		10
		220/240 V	A	6		10
		280/440 V	A			6
		600 V	A			2
	AC-15	12 V	A	3	0.3	6
		24 V	A	3	0.3	6
		48 V	A	3		6
		125 V	A	3		6
		220/240 V	A	3		6
		280/440 V	A			2
		600 V	A			0.6
	DC-12	12 V	A	6	0.1	6
		24 V	A	4	0.1	6
		48 V	A	2		2
		110 V	A	0.5		0.6
		250 V	A	0.25		0.3
	DC-13	12 V	A	1	0.07	3
		24 V	A	0.8	0.07	3
		48 V	A	0.4		0.8
		110 V	A	0.2		0.2
		250 V	A	0.1		0.1
Short-circuit protection	Fuses	Type gG/gL		according to the specifications relating to rated operational current		
	Miniature circuit breakers	Characteristic type B		according to the specifications relating to rated operational current		
Lead time relative to main contacts[1]	LCS		ms	> 20		
Switching frequency	Switching operations per hour			240		
Degree of protection	Accessories cover closed			IP40		
	Accessories cover open			IP20		
Minimum load		At 24 V DC	mA	70	0.5	70
		At 5 V DC	mA		1	

[1] In combination with manual switching operations, but not when motor operators are used

4.2.5 Auxiliary releases

Auxiliary releases allow remote electrical tripping of the circuit breaker. They can be used to monitor control or main circuits in order to implement a protective system against accidental restart following a power failure, for example.

Auxiliary releases therefore perform a main circuit monitoring function in addition to the main circuit monitoring performed by the trip unit.

Auxiliary releases are extremely easy to install. No tools are required because these 21 mm wide components are simply snapped into place in the accessory compartments to the left and right of the handle. The accessories are connected by screw terminals for auxiliary conductors with a cross-section of up to 1.5 mm^2. The terminals are mounted on the front of the unit for easy access.

The shunt trips are suitable for use in electrical interlocks. An attempt to switch on a circuit breaker while the interlock voltage is applied to the shunt trip leads to a so-called "no-load switching operation", i.e. the basic breaker always returns to the TRIP position and the main contacts never close.

Note

All auxiliary releases are reverse-polarity-protected.

Shunt trip left STL

Shunt trips of type STL can be fitted in the left-hand accessory compartment as an alternative to an undervoltage release. The units are available with five rated voltages in the following range:

- 24 to 600 V AC 50/60 Hz
- 12 to 250 V DC

They have a maximum power consumption of 58 VA which is significantly lower than the power consumption of the flexible shunt trip versions.

Switches (permanent signal) or momentary push-buttons (minimum signal duration 40 ms) may be used to control shunt trips.

Shunt trip left STL (EI) for electrical interlocks

Shunt trips of the type STL (EI) can be used to implement electrical interlocks between two molded case circuit breakers. The interlocking auxiliary release prevents short-time contact between the main contacts during a switch-on attempt.

Shunt trip STL (EI) is available with a rated voltage of 24 V DC.

Shunt trips flexible STF

Shunt trips of type STF can be fitted in the left-hand and the right-hand (3VA2 only) accessory compartment. They are therefore suitable for combining different auxiliary releases in one switch.

The units are available with six rated voltages in the following range:

- 24 to 600 V AC 50/60 Hz

Due to their design, their power consumption ranges up to maximum 750 VA and is therefore higher than the power consumption of STL versions.

Undervoltage releases UVR

Undervoltage releases trip the molded case circuit breaker in the event that the rated voltage fails or drops to between 70% and 35% of its normal value (in compliance with the relevant standard).

The main contacts of the basic breaker cannot be reclosed until the voltage applied to the UVR reaches 85% of its rated value. The breaker main contacts cannot close until the UVR rated voltage reaches this level.

The units are available with rated voltages in the following range:

- 24 to 480 V AC 50/60 Hz
- 12 to 250 V DC

Universal releases UNI

A universal release is a single, 21 mm wide component in which a shunt trip and an undervoltage release are combined. These are subject to the same tripping conditions as the individual devices. Both functions can therefore be performed at the same time with a minimal footprint.

The three available rated voltages are identical in each case for both the shunt trip and the undervoltage release. These rated voltages are:

- 12 V DC
- 24 V DC
- 48 V DC

Technical specifications of shunt trips and releases

Technical specifications Auxiliary releases				STL	STL (EI)	STF	UVR	UNI
								
Overall width			mm	21				
Graphical symbol				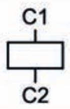	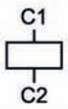	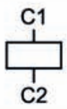		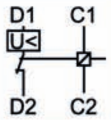
Conductor cross-section	solid/stranded/finely stranded with end sleeve	Screw-type terminal (per contact)	Number x mm^2	1 x (0.5 mm^2 - 1.5 mm^2)				
		Screw-type terminal (per contact)	Number x AWG	1 x (AWG20 - AWG16)				
	Finely stranded with insulated end sleeve	Screw-type terminal (per contact)	Number x mm^2	1 x (0.5 mm^2 - 1.0 mm^2)				
		Screw-type terminal (per contact)	Number x AWG	1 x (AWG20 - AWG16)				
	Tightening torque (connecting cables)		Nm	$0.4^{+0.1}$				
	Stripped length 		mm	10				
Rated insulation voltage		U_i	V AC	690 Overvoltage category III Pollution degree 3				
Power consumption	12	V DC	W	30				
	24 - 30	V DC	W	25 - 50				
	48 - 60	V DC	W	20 - 30				
	110 - 127	V DC	W	30 - 40				
	220 - 250	V DC	W	23 - 35				
	24	V AC 50/60 Hz	VA	30				
	48 - 60	V AC 50/60 Hz	VA	15 - 30				
	110 - 127	V AC 50/60 Hz	VA	30 - 40				
	208 - 277	V AC 50/60 Hz	VA	20 - 40				
	380 - 600	V AC 50/60 Hz	VA	15 - 40				
	24	V DC	W		7			
	24	V AC 50/60 Hz	VA	–		340		
	48 - 60	V AC 50/60 Hz	VA	–		400 - 720		
	110 127	V AC 50/60 Hz	VA	–		550 - 810		
	208 - 277	V AC 50/60 Hz	VA	–		380 - 720		
	380 - 500	V AC 50/60 Hz	VA	–		350 - 650		
	600	V AC 50760 Hz	VA	–		300		

Technical specifications Auxiliary releases				STL	STL (EI)	STF	UVR	UNI
								
Power consumption	12	V DC	W				< 2.5	
	24	V DC	W				< 2.5	
	48	V DC	W				< 2.5	
	60	V DC	W				< 2.5	
	125 - 127	V DC	W				< 2.5	
	220- 230	V DC	W				< 2.5	
	250	V DC	W				< 2.5	
	24	V AC 50/60 Hz	VA				< 2.0	
	48	V AC 50/60 Hz	VA				< 2.0	
	60	V AC 50/60 Hz	VA				< 2.0	
	110	V AC 50/60 Hz	VA				< 2.0	
	120 - 127	V AC 50/60 Hz	VA				< 2.0	
	208 - 230	V AC 50/60 Hz	VA				< 2.0	
	380 - 400	V AC 50/60 Hz	VA				< 2.5	
	440 - 480	V AC 50/60 Hz	VA				< 2.5	
	12	V DC (Cat II; PELV/SELV)	W					UVR: < 2.5 SHT: 20
	24	V DC (Cat II; PELV/SELV)	W					UVR: < 2.5 SHT: 20
	48	V DC (Cat II; PELV/SELV)	W					UVR: < 2.5 SHT: 20
Rated impulse withstand voltage		U_{imp}	kV	6	6	6	4	0.5
Making current		I max	bei V	1.5 A / 24 V AC	1 A / 24 V DC	18 A / 24 V AC	5 mA / 480 V	1.5 A / 24 V
Maximum tripping time			ms	< 10				
Service life	Electrical trips			8500				
	Mechanical switching cycles of circuit breaker			25000				
Priority with respect to other control signals				Given				
Degree of protection	Accessories cover closed			IP 40				
	Accessories cover open			IP 20				
Minimum signal duration			ms	40	40	40		40
Response voltage of shunt trip: Pick-up (circuit breaker trips)		Us/V	%	70 … 110	70 … 110	70 … 110		70 … 110
Response voltage of undervoltage release:	Pick-up (circuit breaker can be switched on)	Us/V	%				85 … 110	
	Release (circuit breaker trips)	Us/V	%				35 … 70	
Tripping frequency		Tripping operations per hour		240	240	120	Unlimited	
Suitable for electrical interlocking of MCCBs				No	Yes	No	Yes	

Tripping times of shunt trips

Cable length under 20 m at U_e:

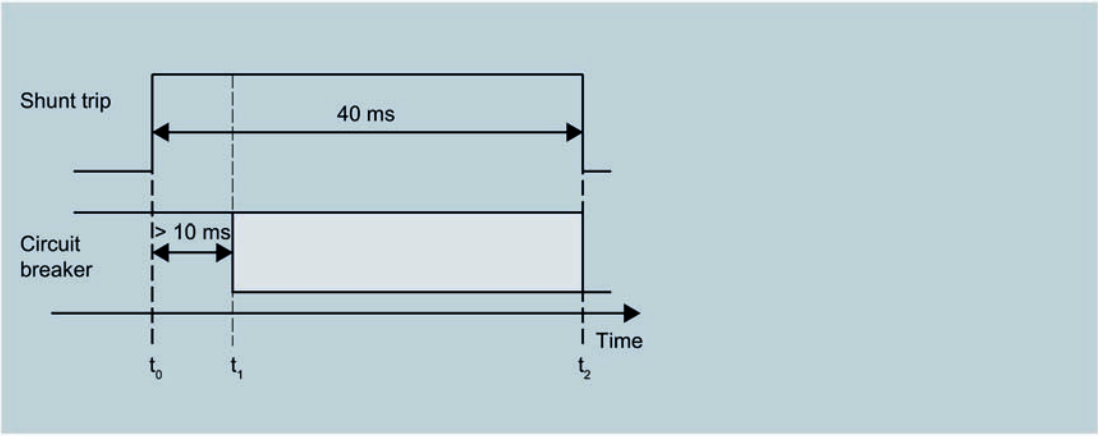

Cable length 20 m to 200 m at U_e and max. conductor cross section:

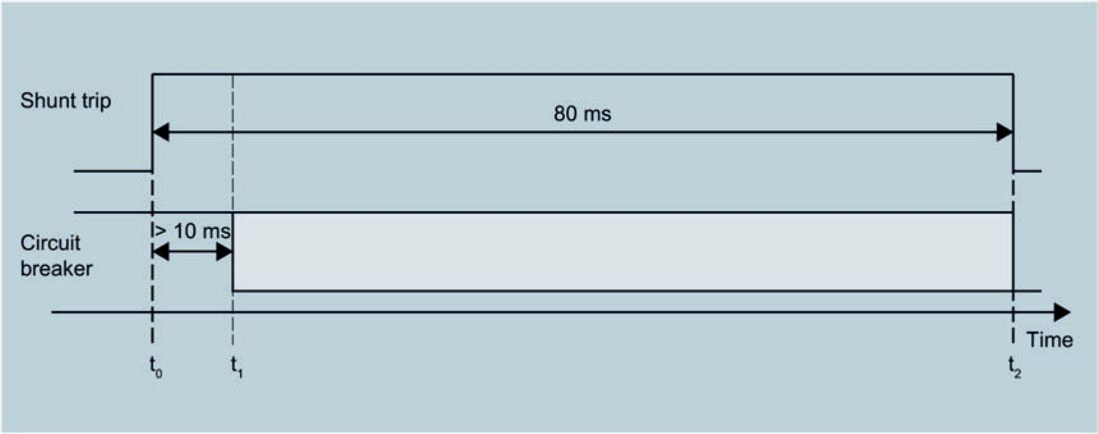

4.2.6 Time-delay devices for undervoltage releases

Undervoltage releases can also be equipped with external, electronic time-delay control devices which prevent unintentional tripping in response to brief voltage dips during periods of disrupted operation.

Time-delay device for UVR with fixed delay setting

The simple time-delay device with fixed delay setting is available for the following voltages:

- 110 V AC and 230 V DC
- 24 V DC

The default delay time is >100 ms as supplied, but can be extended by the customer with the addition of supplementary capacitors:

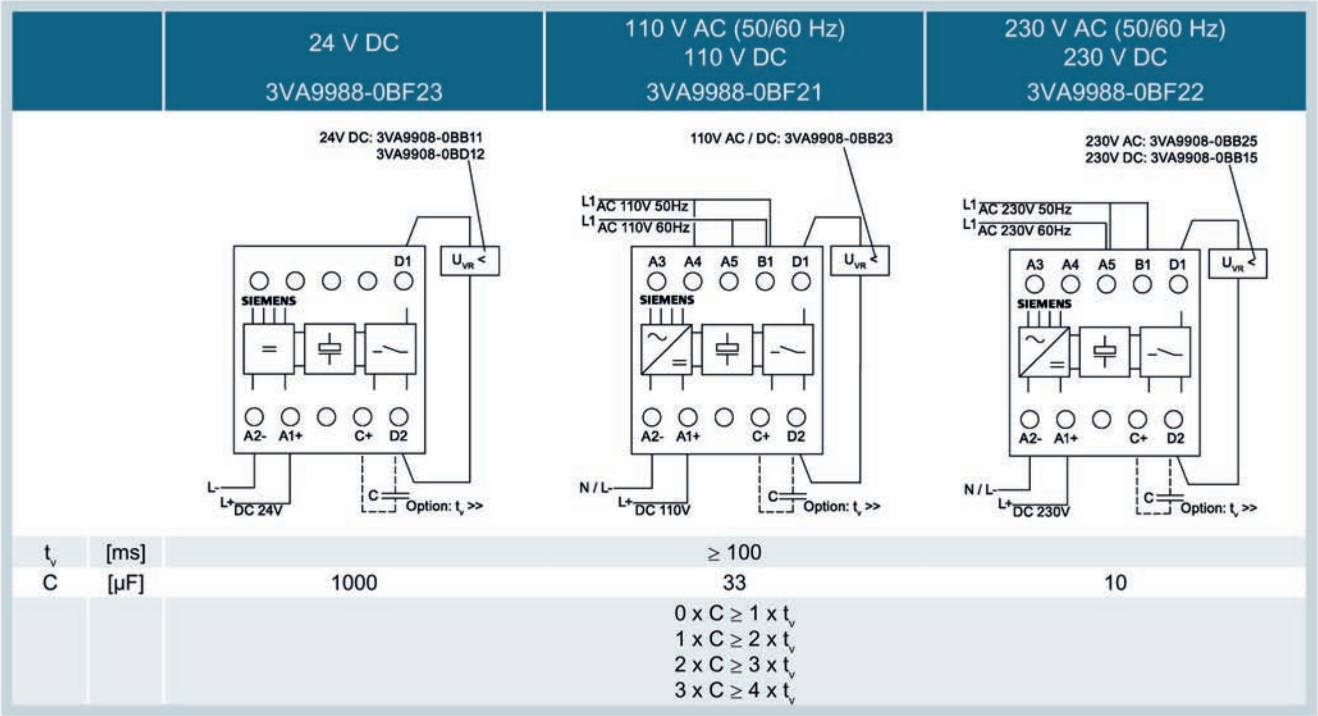

		24 V DC 3VA9988-0BF23	110 V AC (50/60 Hz) 110 V DC 3VA9988-0BF21	230 V AC (50/60 Hz) 230 V DC 3VA9988-0BF22
t_v	[ms]	≥ 100		
C	[µF]	1000	33	10
		$0 \times C \geq 1 \times t_v$ $1 \times C \geq 2 \times t_v$ $2 \times C \geq 3 \times t_v$ $3 \times C \geq 4 \times t_v$		

The device can be screw-mounted or attached to a 35 mm DIN rail.

You can find a circuit diagram in chapter Circuit diagrams (Page 539) or in the operating instructions.

4.2.7 COM060 communication module

You can find information about the COM060 communication module in chapter Communication and system integration (Page 484).

4.2.8 24 V module

With the aid of the 24 volt module, the ETU electronic trip unit of the 3VA2 molded case circuit breaker can be permanently activated.

The module is installed in the right-hand accessory compartment and takes up four slots.

The following advantages arise from the use of the 24 V module:

- Activated display even when the circuit breaker is switched off or no current is flowing through the main circuit.
- Backlighting permanently activated
- Through activation of the ETUs, it is possible to test and change setting parameters (5-series and 8-series ETUs)
- Faster tripping of the 3VA2 molded case circuit breaker on connecting to a short-circuit by an already active ETU

There are two connection points available for ground and 24 V DC, making looping through of the voltage very easy.

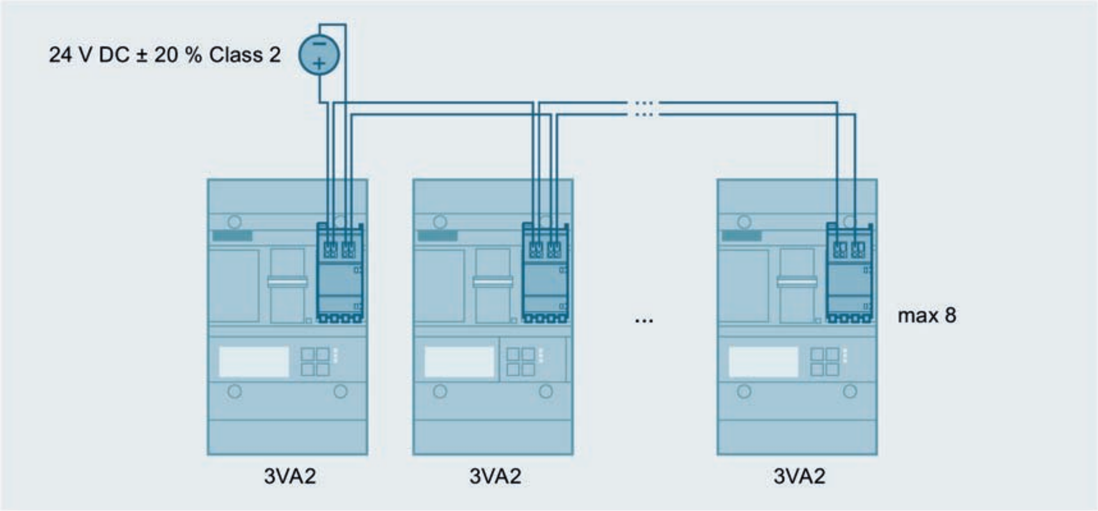

Mechanical design		
Width	mm	28.8
Height	mm	64.1
Depth	mm	33.5
Number of slots		4
Net weight	g	80
General technical specifications		
Pollution degree		3
Overvoltage category		1

4.3 Connection system

The chapter "Connection technology" contains useful information and provides a summarized description of the 3VA connection system. It provides a helpful guide to connecting cables or busbars to a molded case circuit breaker and so helps to ensure the safety of personnel and material assets. Mistakes which affect the operational safety of electrical installations can be avoided.

Contents

The chapter discusses the following topics:

- General information about cables and busbars
- Portfolio of connection components for 3VA molded case circuit breakers with
  - Front cable connection
  - Front busbar connection / cable lug connection
  - Rear busbar connection / cable lug connection
- Further connection accessories

4.3.1 General information about cables and busbars

Cables and busbars: Cables

Cable designation and cable classes

A key design feature of a cable is its flexibility. This is primarily determined by the number of cores inside the cable.

Cable classes as defined by IEC 60228:

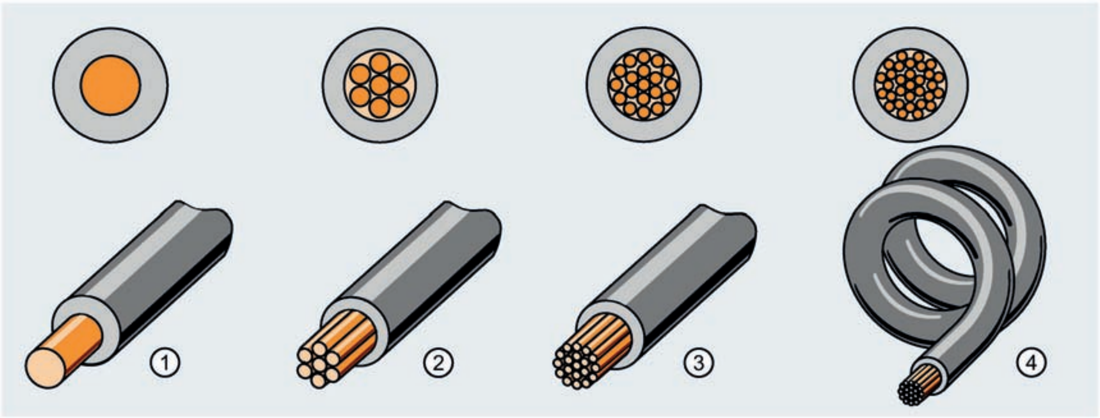

① Class 1 - cable with solid conductor
② Class 2 - cable with stranded conductors
③ Class 5 - cable with finely stranded conductors
④ Class 6 - cable with a large number of extra finely stranded conductors

The conductors in class 1 and 2 cables are inflexible conductors, either solid or stranded. These are used predominantly in applications with low-curvature cable bending radii and in fixed or inflexible installations.
Flexible conductors of class 5 and class 6 permit greater cable bending radii.

The cable conductors used in low-voltage power distribution installations mainly belong to classes 1, 2, 5 and 6.

Cables with solid conductors in class 1 used for these applications normally have a cross section of 16 mm² or less.

Please note: Solid-conductor cables in classes 1 and 2 are smaller in diameter than cables in classes 5 and 6 even when their cross sectional area is the same. As a result, cables with the same diameter from different classes may have different connection cross sections.

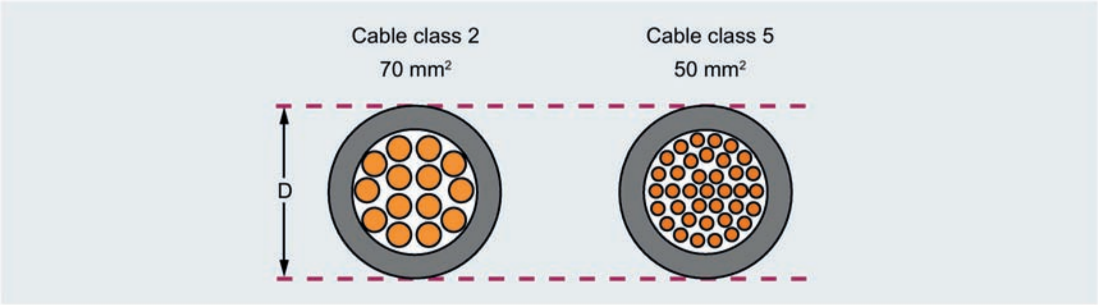

Solid and stranded sector-shaped conductors are also used.

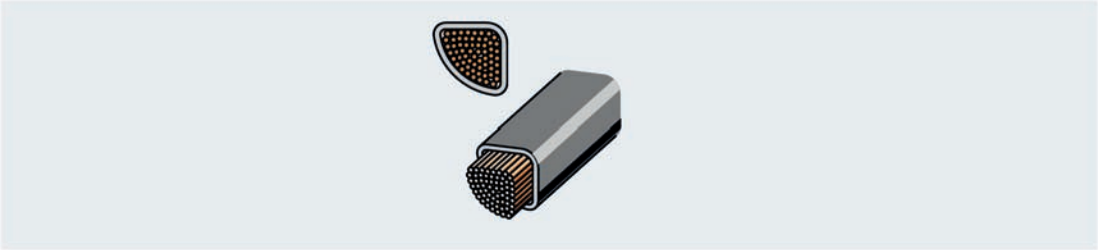

Compression lugs and wire-end ferrules

Cables are connected by means of compression lugs and wire-end ferrules to the molded case circuit breaker in order to provide stable, safe connections. These elements help to make solid connections at the breaker.

The cable is first stripped over the distance L before the compression lug or wire-end ferrule is attached to the cable.

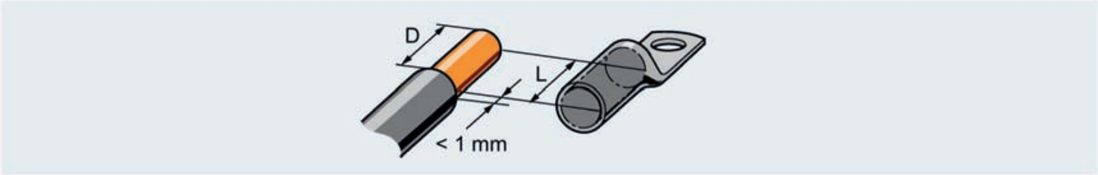

The cable must be stripped carefully to ensure that the correct amount of insulating material is removed. If too much material is removed, it will not be possible to make a secure connection between the cable and compression lug or wire-end ferrule.

Cable lugs for compression connections compliant with DIN 46235 have ideal heat transfer characteristics for connecting busbar connectors. By contrast, "Terminal lugs with narrow palm for switching devices" (designation "SG" for example) must be used to make direct cable connections in the termination area of the molded case circuit breaker. These terminal lugs vary in design depending on make. All terminal lugs of this kind with the dimensions stipulated in standard IEC 60947-1, Annex P are basically suitable.

Cables and busbars: Busbars

In addition to cables, the busbar is also widely used in electrical connections, especially in panels.

Some of the reasons for using busbars include:

- High-curvature bending radii which are unsuitable for cables of large cross section
- Lack of space
- Heat dissipation, air circulation
- …

Rigid and in some cases flexible busbars are used in the examples of applications listed above.

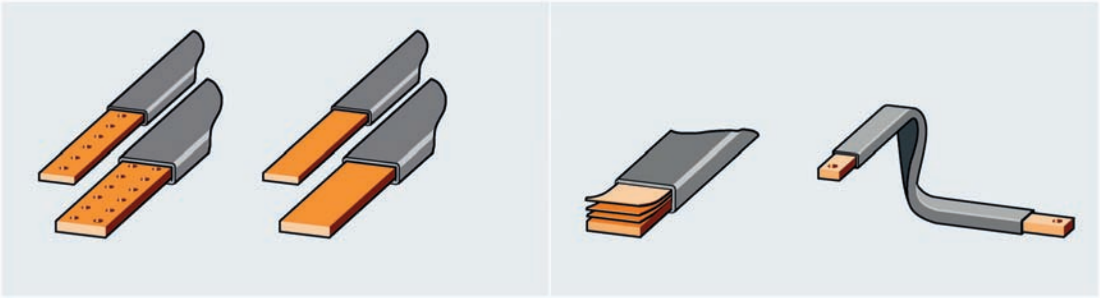

Rigid busbars are made of copper or aluminum. Pre-punched aluminum busbars, some of which are threaded, are often used.

Flexible busbars are chosen for applications which demand a high degree of flexibility and high-curvature bending radii. These consist of bundles of copper or aluminum strips.

4.3.2 Portfolio of connection components for 3VA molded case circuit breakers

4.3.2.1 General overview

3VA molded case circuit breakers employ connection technology which is designed to support uncomplicated and convenient commissioning of the breakers in such a way that all installation requirements are fulfilled.

To meet this objective, an extensive portfolio of connection components is available.

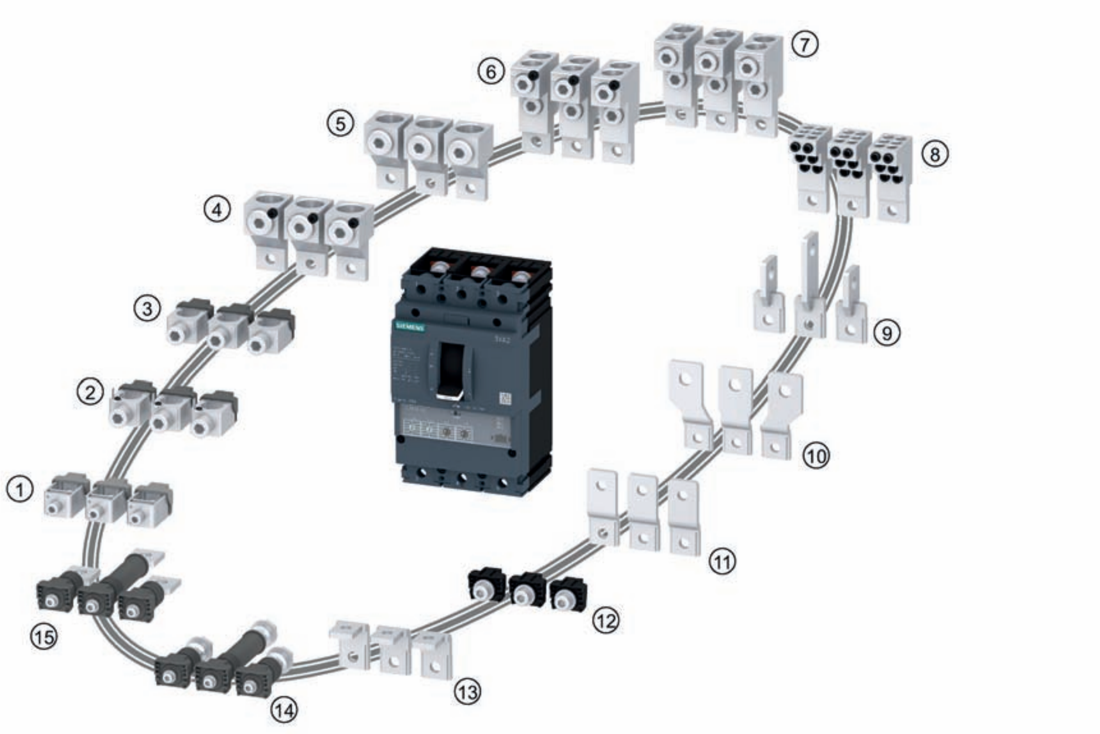

① Box terminal
② Wire connector with control wire tap
③ Wire connector
④ Wire connector, large, with control wire tap
⑤ Wire connector, large
⑥ Wire connector, 2 cables, with control wire tap
⑦ Wire connector, 2 cables
⑧ Wire connector, 6 cables
⑨ Bus connectors edgewise
⑩ Front bus connectors offset
⑪ Front bus connectors extended
⑫ Nut keeper kit
⑬ Nut keeper kit, right-angled
⑭ Rear connection stud round
⑮ Rear connection stud flat

Furthermore, the connection accessories (see chapter Further connection accessories (Page 246)) can be optionally installed to insulate the termination area of the 3VA molded case circuit breaker and so provide protection against accidental contact. A control wire tap can be implemented quickly using accessory components which are available by special order.

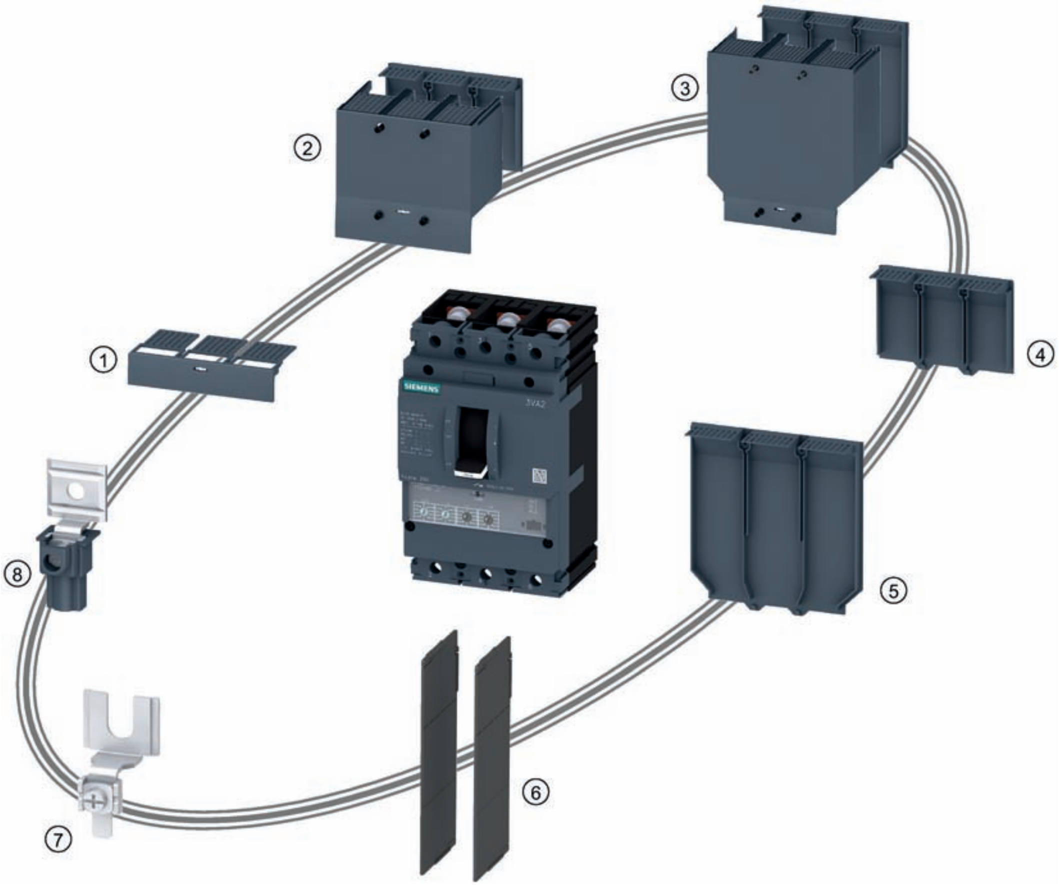

① Terminal cover	⑤ Rear insulating plate, offset
② Terminal cover, extended	⑥ Phase barriers
③ Terminal cover, offset	⑦ Control wire tap for busbars
④ Insulating plate	⑧ Control wire tap for box terminal

The table below lists all the main conductor connection systems available for 3VA molded case circuit breakers and also indicates which type of cables or busbars are compatible which each connection system. A basic distinction is made between front and rear connections.

The illustration in the table shows the 3-piece pack for the 3-pole molded case circuit breaker. All connection systems are also available in 4-piece packs for 4-pole molded case circuit breakers.

Connection technology		Cables and busbars			
Front connections	Illustration				
Box terminal		■			■
All versions of the wire connector		■			
Circular conductor terminal with auxiliary conductor terminal	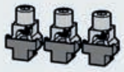	■			
Lug terminal			■	■	■
Front connection bars extended			■	■	■
Front connection bars broadened			■	■	■
Front connection bars edgewise			■	■	■
Rear connections					
Rear terminal flat			■	■	■
Rear connecting studs			■	■	■
Lug terminal, right-angled [1]			■	■	■

---

[1] A box terminal can be installed at the right-angled nut keeper kit to allow a cable to be connected directly.

The connection technology for 3VA molded case circuit breakers can be used without modifications in the following applications:

- On all fixed-mounted versions of molded case circuit breaker
- On all molded case circuit breakers equipped with plug-in technology
- On all molded case circuit breakers equipped with draw-out technology

The connection components described above are identical for fixed-mounted breakers, for plug-in and for draw-out versions. If additional insulation measures are necessary, there may be differences between fixed-mounted and draw-out versions.

Connection technology available from or installed at the factory

All 3VA molded case circuit breakers are available as standard with a nut keeper kit (clip-in nut and clamping screw) at the infeed and load ends.

For units up to size 160 A, a box terminal for direct cable connection can be optionally selected instead of the nut keeper kit. The box terminal is preassembled and installed at the factory.

Connection technology from factory	Illustration	3VA1					3VA2					
		100 A	160 A	250 A	400 A	600 A	100 A	160 A	250 A	400 A	630 A	1000 A
Lug terminal		■	■	■	■	■	■	■	■	■	■	■
Box terminal (optional)		■	■				■	■				

4.3.2.2 Front cable connection

The diagram below illustrates all the components available for implementing a direct cable connection at the molded case circuit breaker. The only exception is the box terminal as this can be used to connect busbars as well as cables.

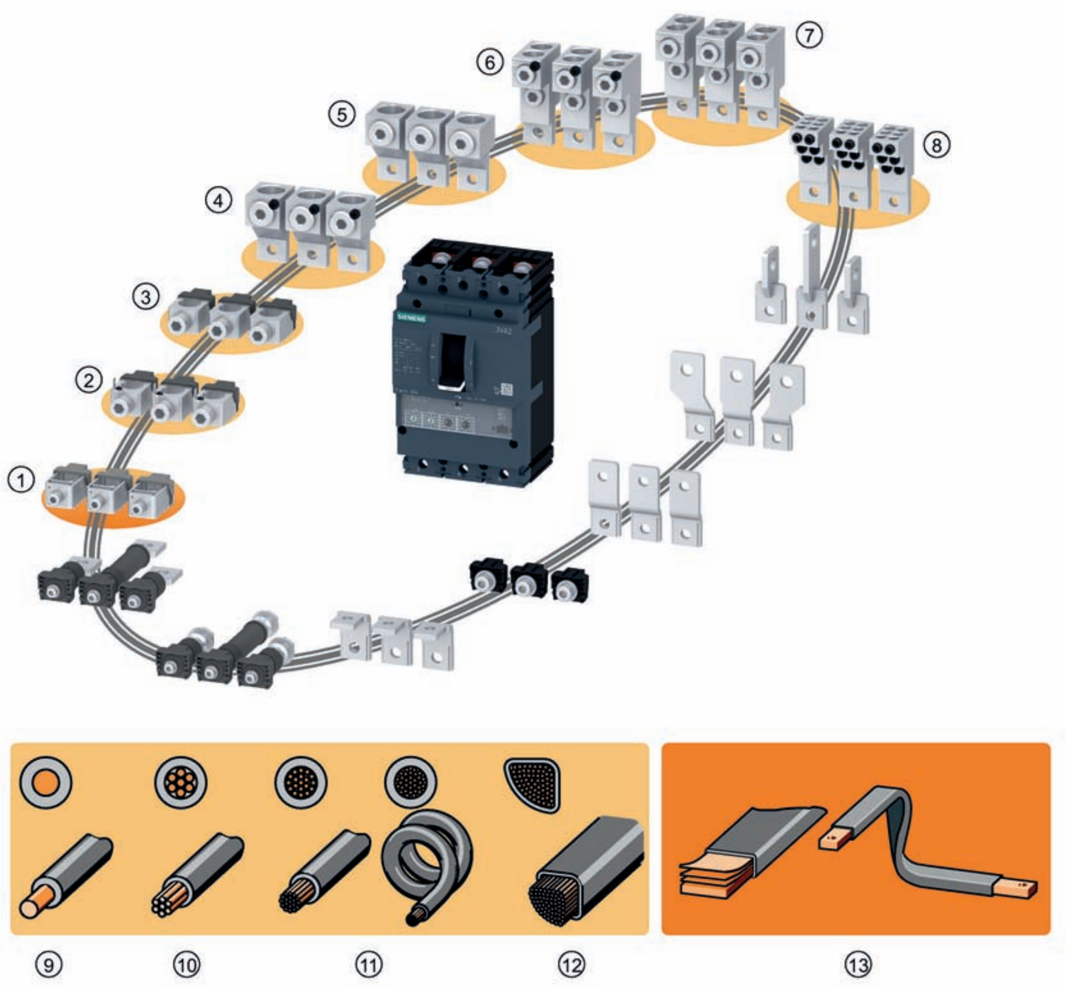

Connection technology
- ① Box terminal
- ② Wire connector with control wire tap
- ③ Wire connector
- ④ Wire connector, large, with control wire tap
- ⑤ Wire connector, large
- ⑥ Wire connector, 2 cables, with control wire tap
- ⑦ Wire connector, 2 cables
- ⑧ Wire connector, 6 cables

Cables and busbars
- ⑨ Solid conductor, class 1
- ⑩ Stranded conductor, class 2
- ⑪ Flexible conductors, classes 5 and 6
- ⑫ Sector-shaped conductor
- ⑬ Flexible busbars

Box terminal

The box terminal as a factory-assembled connection can be optionally selected as an alternative to the nut keeper kit (see chapter Front busbar and cable lug connections (Page 232)) for all 3VA molded case circuit breakers up to size 160 A. The 3VA breaker is then shipped with preassembled box terminals.

An auxiliary connection can be implemented using a special control wire tap. For further information, please refer to chapter Auxiliary conductor terminal (Page 269).

In addition to directly connected cables, flexible busbars can also be connected to box terminals.

The tables below show all the types and sizes of cable and flexible busbar that can be connected to a box terminal.

3VA1 molded case circuit breakers:

	Designation			Box terminal			
Connection technology	Article No.			3VA915.-0JA11	3VA925.-0JA11	3VA925.-0JA12	3VA948.-0JA13
	Can be installed in 3VA1			3VA10 3VA11	3VA12	3VA12	3VA13 3VA14
		Terminal marking		TS1.1	TS1.2	TS1.3	TS1.5 1)
Cables and busbars	Cable connection 	Cross-section specifications in mm²					
		Copper cable (number of cables x cross-section range)	Finely stranded (Class 5/6)	1 x 1.5 … 50 mm²	1 x 10 … 95 mm²	1 x 95 … 150 mm²	1 x 35 … 240 mm²
			Finely stranded with ferrule (Class 5/6)	1 x 1.5 … 50 mm²	1 x 6 … 95 mm²	1 x 50 … 150 mm²	1 x 35 … 240 mm²
			Stranded (Class 2)	1 x 1.5 … 70 mm²	1 x 6 … 120 mm²	1 x 50 … 185 mm²	1 x 35 … 300 mm²
			Solid (Class 1)	1 x 1.5 … 16 mm²	1 x 6 … 16 mm²	-	-
		Aluminum cable		-	-	-	-
		Stripped length of cable L		12 mm	19 mm	20 mm	26.5 mm
		Tightening torque	Finely stranded (Class 5/6)	≤ 16 mm²: 5 Nm ≥ 25 mm²: 8 Nm	≤ 25 mm²: 6 Nm ≥ 35 mm²: 10 Nm	≤ 185 mm²: 14 Nm	≤ 95 mm²: 16 Nm ≥ 120 mm²: 28 Nm
			Stranded (Class 2)				
			Solid (Class 1)				
		Cross-section specifications in AWG					
		Copper cable (number of cables x cross-section range)	Stranded (Class C)	1 x 14 AWG … 3/0 AWG	1 x 10 AWG … 3/0 AWG	-	1 x 1/0 … 500 kcmil
			Stranded (Class B)	1 x 14 AWG … 3/0 AWG	1 x 10 AWG … 3/0 AWG	-	1 x 1/0 … 500 kcmil
			Solid (Class A)	1 x 14 AWG … 10 AWG	1 x 10 AWG	-	-
		Aluminum cable		-	-	-	-
		Stripped length of cable L		0.50 in	0.75 in	-	1.05 in
		Tightening torque	Stranded (Class C)	≤ 6 AWG: 45 lb-in ≥ 4 AWG: 70 lb-in	≤ 4 AWG: 105 lb-in ≥ 3 AWG: 140 lb-in	-	≤ 4/0: 140 lb-in ≥ 250 kcmil: 248 lb-in
			Stranded (Class B)				
			Solid (Class A)				
	Flexible copper busbar	Specification of usual sizes [number x width x thickness]	Minimum number: Maximum number:	2 x 9 mm x 0.8 mm 9 x 9 mm x 0.8 mm	2 x 13 mm x 0.5 mm 6 x 13 mm x 0.5 mm	6 x 13 mm x 0.5 mm 6 x 13 mm x 0.5 mm	2 x 20 mm x 1 mm 10 x 20 mm x 1 mm
			Minimum number: Maximum number:	2 x 13 mm x 0.5 mm 6 x 13 mm x 0.5 mm	2 x 15.5 mm x 0.8 mm 6 x 15.5 mm x 0.8 mm	4 x 15.5 mm x 0.8 mm 6 x 15.5 mm x 0.8 mm	2 x 24 mm x 1 mm 10 x 24 mm x 1 mm
			Minimum number: Maximum number:		2 x 20 mm x 1 mm 6 x 20 mm x 1 mm	3 x 20 mm x 1 mm 6 x 20 mm x 1 mm	
		Tightening torque		8 Nm	10 Nm	14 Nm	28 Nm

1) Cable connection: Maximum current carrying capacity 400 A
Flexible copper busbar: No restrictions

3VA2 molded case circuit breakers:

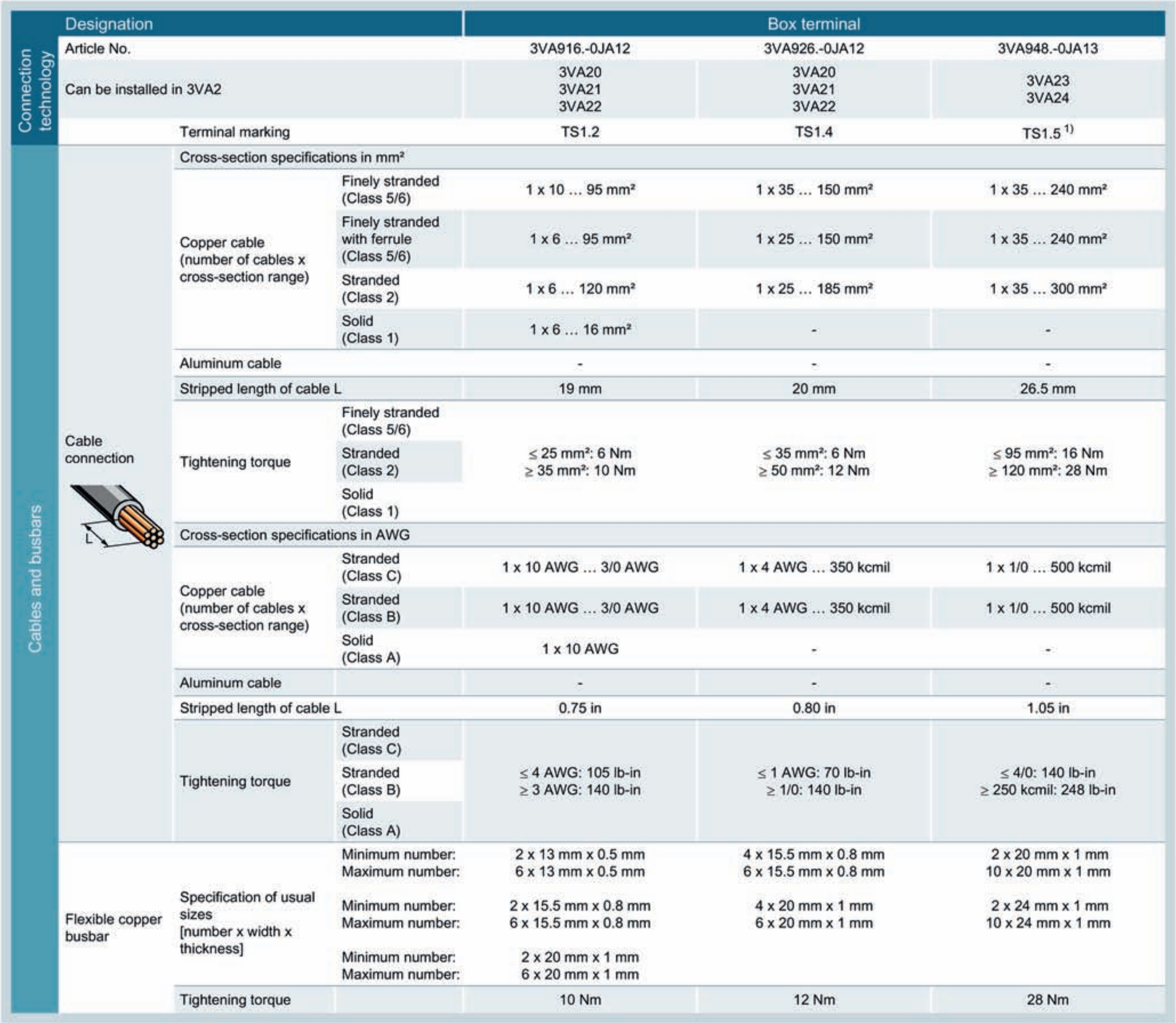

Designation				Box terminal		
Connection technology	Article No.			3VA916.-0JA12	3VA926.-0JA12	3VA948.-0JA13
	Can be installed in 3VA2			3VA20 3VA21 3VA22	3VA20 3VA21 3VA22	3VA23 3VA24
		Terminal marking		TS1.2	TS1.4	TS1.5 [1]
Cables and busbars	Cable connection	Cross-section specifications in mm²				
		Copper cable (number of cables x cross-section range)	Finely stranded (Class 5/6)	1 x 10 ... 95 mm²	1 x 35 ... 150 mm²	1 x 35 ... 240 mm²
			Finely stranded with ferrule (Class 5/6)	1 x 6 ... 95 mm²	1 x 25 ... 150 mm²	1 x 35 ... 240 mm²
			Stranded (Class 2)	1 x 6 ... 120 mm²	1 x 25 ... 185 mm²	1 x 35 ... 300 mm²
			Solid (Class 1)	1 x 6 ... 16 mm²	-	-
		Aluminum cable		-	-	-
		Stripped length of cable L		19 mm	20 mm	26.5 mm
		Tightening torque	Finely stranded (Class 5/6)	≤ 25 mm²: 6 Nm ≥ 35 mm²: 10 Nm	≤ 35 mm²: 6 Nm ≥ 50 mm²: 12 Nm	≤ 95 mm²: 16 Nm ≥ 120 mm²: 28 Nm
			Stranded (Class 2)			
			Solid (Class 1)			
		Cross-section specifications in AWG				
		Copper cable (number of cables x cross-section range)	Stranded (Class C)	1 x 10 AWG ... 3/0 AWG	1 x 4 AWG ... 350 kcmil	1 x 1/0 ... 500 kcmil
			Stranded (Class B)	1 x 10 AWG ... 3/0 AWG	1 x 4 AWG ... 350 kcmil	1 x 1/0 ... 500 kcmil
			Solid (Class A)	1 x 10 AWG	-	-
		Aluminum cable		-	-	-
		Stripped length of cable L		0.75 in	0.80 in	1.05 in
		Tightening torque	Stranded (Class C)	≤ 4 AWG: 105 lb-in ≥ 3 AWG: 140 lb-in	≤ 1 AWG: 70 lb-in ≥ 1/0: 140 lb-in	≤ 4/0: 140 lb-in ≥ 250 kcmil: 248 lb-in
			Stranded (Class B)			
			Solid (Class A)			
	Flexible copper busbar	Specification of usual sizes [number x width x thickness]	Minimum number: Maximum number:	2 x 13 mm x 0.5 mm 6 x 13 mm x 0.5 mm	4 x 15.5 mm x 0.8 mm 6 x 15.5 mm x 0.8 mm	2 x 20 mm x 1 mm 10 x 20 mm x 1 mm
			Minimum number: Maximum number:	2 x 15.5 mm x 0.8 mm 6 x 15.5 mm x 0.8 mm	4 x 20 mm x 1 mm 6 x 20 mm x 1 mm	2 x 24 mm x 1 mm 10 x 24 mm x 1 mm
			Minimum number: Maximum number:	2 x 20 mm x 1 mm 6 x 20 mm x 1 mm		
		Tightening torque		10 Nm	12 Nm	28 Nm

---

[1] Cable connection: Maximum current carrying capacity 400 A
Flexible copper busbar: No restrictions

Box terminals can be ordered

- as a pack of 3
- as a pack of 4

Wire connector with and without control wire tap

The wire connector is available under separate article numbers depending on whether it is ordered with or without a control wire tap. With the exception of the hole for the control wire tap, both wire connectors are technically identical, i.e. the same cable cross sections can be connected to both variants.

Note

All control wire taps offered in the 3VA molded case circuit breaker portfolio are permitted only up to a maximum current of 15 A.

Suitable cable cross-sections: Cables up to a maximum of 2.5 mm^2 can be connected.

The wire connector is an internal component, i.e. it is contained within the external contour of the molded case circuit breaker. As a result, the size of cable cross section which can be connected is limited by the geometry of the breaker's termination area.

The tables below show all the types and sizes of cable which can be connected to a wire connector.

3VA1 molded case circuit breakers:

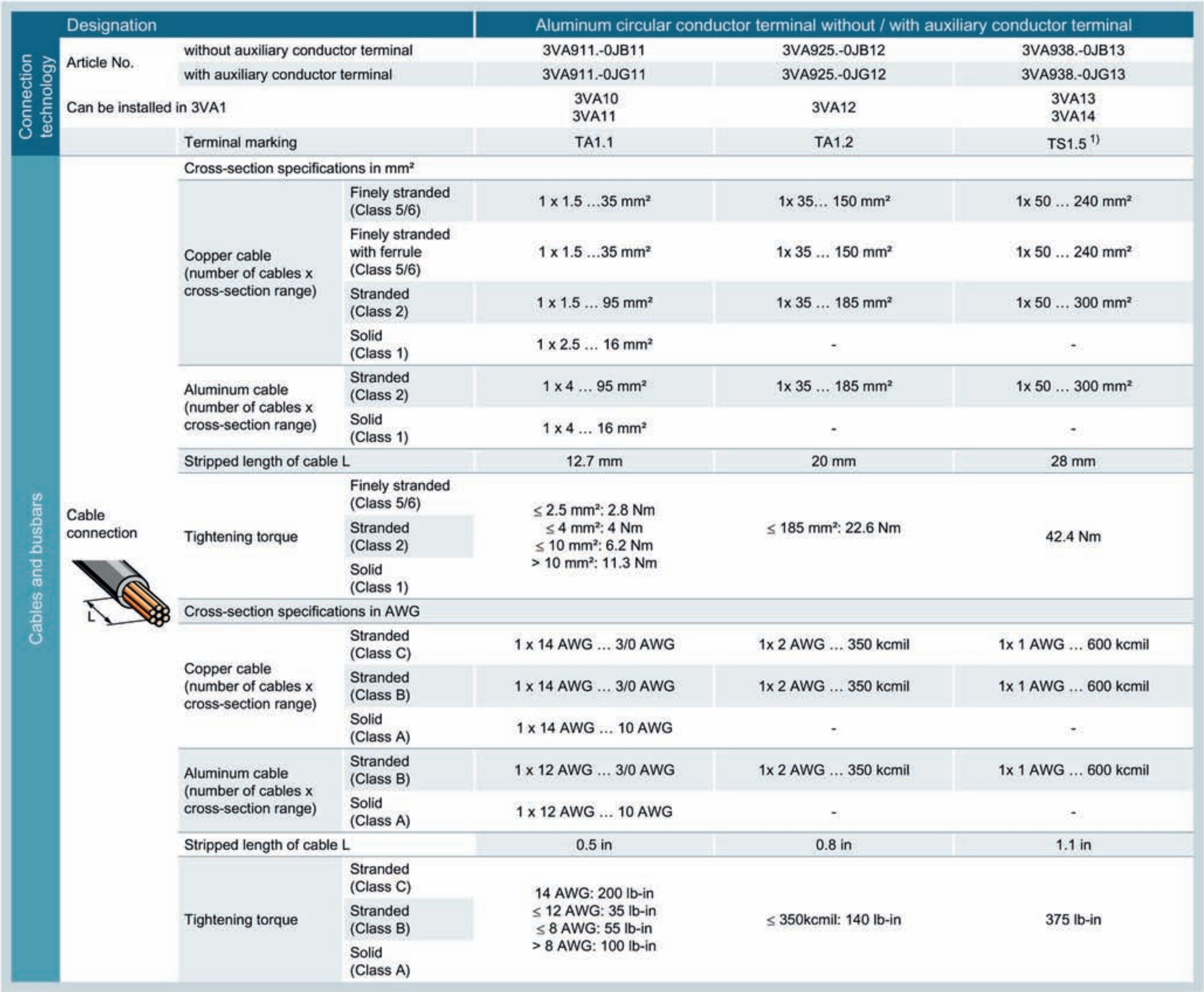

	Designation			Aluminum circular conductor terminal without / with auxiliary conductor terminal		
Connection technology	Article No.	without auxiliary conductor terminal		3VA911.-0JB11	3VA925.-0JB12	3VA938.-0JB13
		with auxiliary conductor terminal		3VA911.-0JG11	3VA925.-0JG12	3VA938.-0JG13
	Can be installed in 3VA1			3VA10 3VA11	3VA12	3VA13 3VA14
		Terminal marking		TA1.1	TA1.2	TS1.5 1)
Cables and busbars	Cable connection	Cross-section specifications in mm^2				
		Copper cable (number of cables x cross-section range)	Finely stranded (Class 5/6)	1 x 1.5 …35 mm^2	1x 35… 150 mm^2	1x 50 … 240 mm^2
			Finely stranded with ferrule (Class 5/6)	1 x 1.5 …35 mm^2	1x 35 … 150 mm^2	1x 50 … 240 mm^2
			Stranded (Class 2)	1 x 1.5 … 95 mm^2	1x 35 … 185 mm^2	1x 50 … 300 mm^2
			Solid (Class 1)	1 x 2.5 … 16 mm^2	-	-
		Aluminum cable (number of cables x cross-section range)	Stranded (Class 2)	1 x 4 … 95 mm^2	1x 35 … 185 mm^2	1x 50 … 300 mm^2
			Solid (Class 1)	1 x 4 … 16 mm^2	-	-
		Stripped length of cable L		12.7 mm	20 mm	28 mm
		Tightening torque	Finely stranded (Class 5/6)	≤ 2.5 mm^2: 2.8 Nm ≤ 4 mm^2: 4 Nm ≤ 10 mm^2: 6.2 Nm > 10 mm^2: 11.3 Nm	≤ 185 mm^2: 22.6 Nm	42.4 Nm
			Stranded (Class 2)			
			Solid (Class 1)			
		Cross-section specifications in AWG				
		Copper cable (number of cables x cross-section range)	Stranded (Class C)	1 x 14 AWG … 3/0 AWG	1x 2 AWG … 350 kcmil	1x 1 AWG … 600 kcmil
			Stranded (Class B)	1 x 14 AWG … 3/0 AWG	1x 2 AWG … 350 kcmil	1x 1 AWG … 600 kcmil
			Solid (Class A)	1 x 14 AWG … 10 AWG	-	-
		Aluminum cable (number of cables x cross-section range)	Stranded (Class B)	1 x 12 AWG … 3/0 AWG	1x 2 AWG … 350 kcmil	1x 1 AWG … 600 kcmil
			Solid (Class A)	1 x 12 AWG … 10 AWG	-	-
		Stripped length of cable L		0.5 in	0.8 in	1.1 in
		Tightening torque	Stranded (Class C)	14 AWG: 200 lb-in ≤ 12 AWG: 35 lb-in ≤ 8 AWG: 55 lb-in > 8 AWG: 100 lb-in	≤ 350kcmil: 140 lb-in	375 lb-in
			Stranded (Class B)			
			Solid (Class A)			

---

1) Copper cable: Maximum current carrying capacity 400 A
Aluminum cable: Maximum current carrying capacity 310 A

3VA2 molded case circuit breakers:

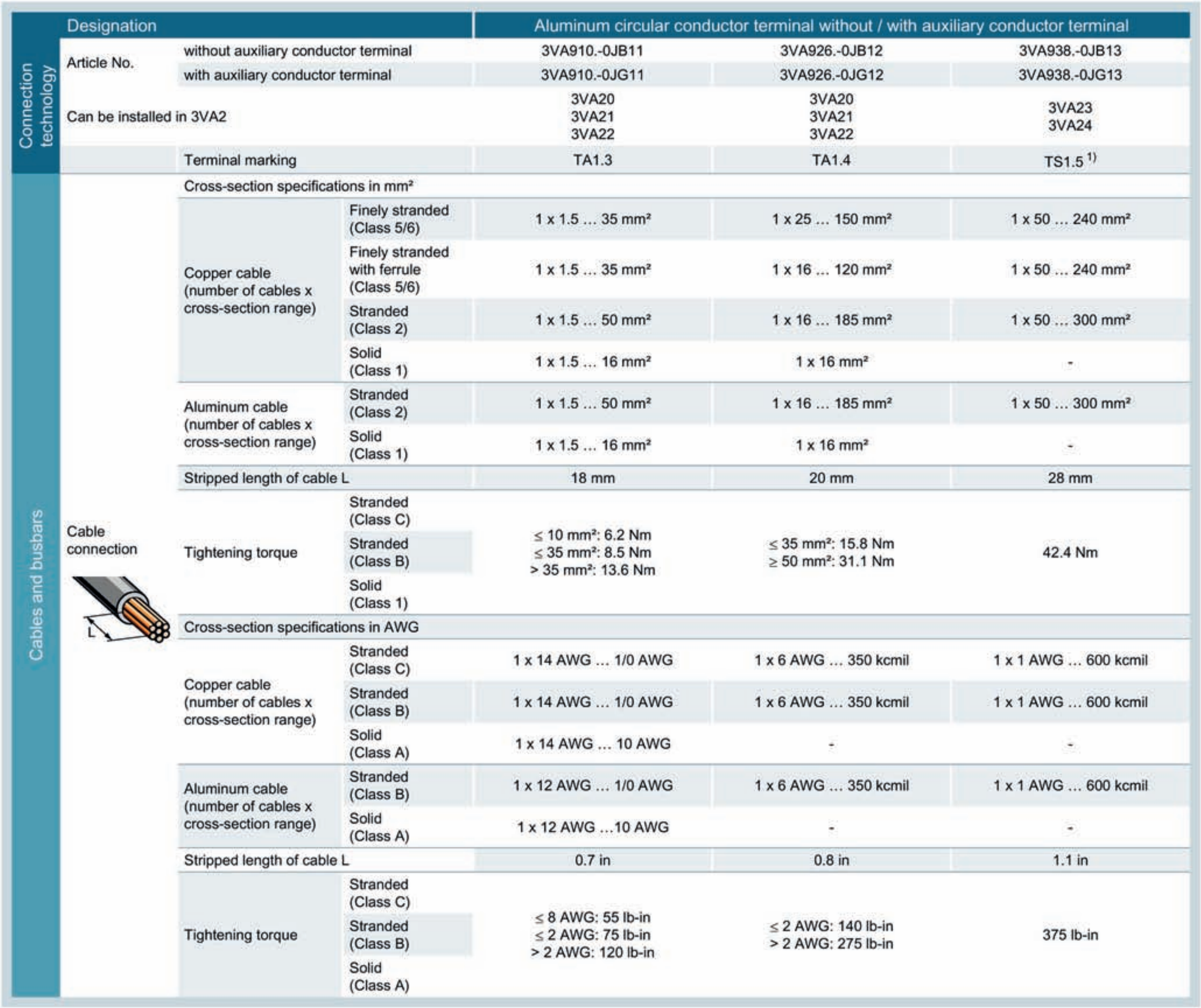

Designation				Aluminum circular conductor terminal without / with auxiliary conductor terminal		
Connection technology	Article No.	without auxiliary conductor terminal		3VA910.-0JB11	3VA926.-0JB12	3VA938.-0JB13
		with auxiliary conductor terminal		3VA910.-0JG11	3VA926.-0JG12	3VA938.-0JG13
	Can be installed in 3VA2			3VA20 3VA21 3VA22	3VA20 3VA21 3VA22	3VA23 3VA24
		Terminal marking		TA1.3	TA1.4	TS1.5 [1]
Cables and busbars	Cable connection	Cross-section specifications in mm²				
		Copper cable (number of cables x cross-section range)	Finely stranded (Class 5/6)	1 x 1.5 … 35 mm²	1 x 25 … 150 mm²	1 x 50 … 240 mm²
			Finely stranded with ferrule (Class 5/6)	1 x 1.5 … 35 mm²	1 x 16 … 120 mm²	1 x 50 … 240 mm²
			Stranded (Class 2)	1 x 1.5 … 50 mm²	1 x 16 … 185 mm²	1 x 50 … 300 mm²
			Solid (Class 1)	1 x 1.5 … 16 mm²	1 x 16 mm²	-
		Aluminum cable (number of cables x cross-section range)	Stranded (Class 2)	1 x 1.5 … 50 mm²	1 x 16 … 185 mm²	1 x 50 … 300 mm²
			Solid (Class 1)	1 x 1.5 … 16 mm²	1 x 16 mm²	-
		Stripped length of cable L		18 mm	20 mm	28 mm
		Tightening torque	Stranded (Class C) Stranded (Class B) Solid (Class 1)	≤ 10 mm²: 6.2 Nm ≤ 35 mm²: 8.5 Nm > 35 mm²: 13.6 Nm	≤ 35 mm²: 15.8 Nm ≥ 50 mm²: 31.1 Nm	42.4 Nm
		Cross-section specifications in AWG				
		Copper cable (number of cables x cross-section range)	Stranded (Class C)	1 x 14 AWG … 1/0 AWG	1 x 6 AWG … 350 kcmil	1 x 1 AWG … 600 kcmil
			Stranded (Class B)	1 x 14 AWG … 1/0 AWG	1 x 6 AWG … 350 kcmil	1 x 1 AWG … 600 kcmil
			Solid (Class A)	1 x 14 AWG … 10 AWG	-	-
		Aluminum cable (number of cables x cross-section range)	Stranded (Class B)	1 x 12 AWG … 1/0 AWG	1 x 6 AWG … 350 kcmil	1 x 1 AWG … 600 kcmil
			Solid (Class A)	1 x 12 AWG …10 AWG	-	-
		Stripped length of cable L		0.7 in	0.8 in	1.1 in
		Tightening torque	Stranded (Class C) Stranded (Class B) Solid (Class A)	≤ 8 AWG: 55 lb-in ≤ 2 AWG: 75 lb-in > 2 AWG: 120 lb-in	≤ 2 AWG: 140 lb-in > 2 AWG: 275 lb-in	375 lb-in

[1] Copper cable: Maximum current carrying capacity 400 A
Aluminum cable: Maximum current carrying capacity 310 A

Wire connector with and without control wire tap can be ordered:

- as a pack of 3
- as a pack of 4

Wire connector, large, with and without control wire tap

The wire connector, large, is available under separate article numbers depending on whether it is ordered with or without a control wire tap. With the exception of the hole for the control wire tap, both wire connectors are technically identical, i.e. the same cable cross sections can be connected to both variants.

Note

All control wire taps offered in the 3VA molded case circuit breaker portfolio are permitted only up to a maximum current of 15 A.

Suitable cable cross-sections: Cables up to a maximum of 2.5 mm^2 can be connected.

The wire connector, large is an external terminal, i.e. it projects beyond the external contour of the breaker's termination area. This means that cables with a larger cross-section can be connected.

The terminal cover extended plus the required assembly materials are supplied as standard with all wire connectors, large. This is used for insulation and provides degree of protection IP4x at the front of the molded case circuit breaker and degree of protection IP2x at the infeed side and load side (see chapter Insulating measures (Page 246)).

The table below shows all the types and sizes of cable which can be connected to a wire connector, large.

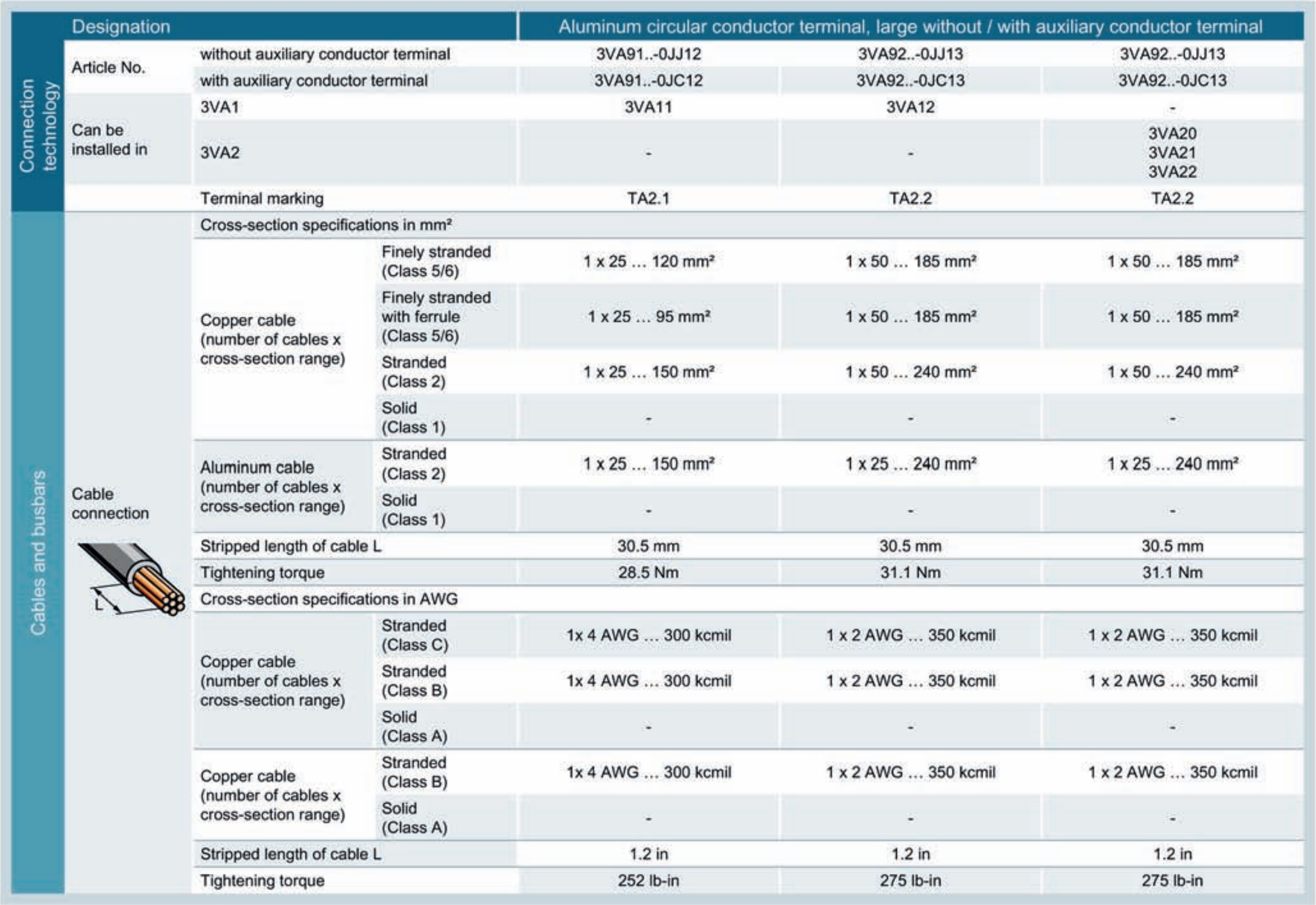

Designation				Aluminum circular conductor terminal, large without / with auxiliary conductor terminal		
Connection technology	Article No.	without auxiliary conductor terminal		3VA91..-0JJ12	3VA92..-0JJ13	3VA92..-0JJ13
		with auxiliary conductor terminal		3VA91..-0JC12	3VA92..-0JC13	3VA92..-0JC13
	Can be installed in	3VA1		3VA11	3VA12	-
		3VA2		-	-	3VA20 3VA21 3VA22
		Terminal marking		TA2.1	TA2.2	TA2.2
Cables and busbars	Cable connection	Cross-section specifications in mm^2				
		Copper cable (number of cables x cross-section range)	Finely stranded (Class 5/6)	1 x 25 … 120 mm^2	1 x 50 … 185 mm^2	1 x 50 … 185 mm^2
			Finely stranded with ferrule (Class 5/6)	1 x 25 … 95 mm^2	1 x 50 … 185 mm^2	1 x 50 … 185 mm^2
			Stranded (Class 2)	1 x 25 … 150 mm^2	1 x 50 … 240 mm^2	1 x 50 … 240 mm^2
			Solid (Class 1)	-	-	-
		Aluminum cable (number of cables x cross-section range)	Stranded (Class 2)	1 x 25 … 150 mm^2	1 x 25 … 240 mm^2	1 x 25 … 240 mm^2
			Solid (Class 1)	-	-	-
		Stripped length of cable L		30.5 mm	30.5 mm	30.5 mm
		Tightening torque		28.5 Nm	31.1 Nm	31.1 Nm
		Cross-section specifications in AWG				
		Copper cable (number of cables x cross-section range)	Stranded (Class C)	1x 4 AWG … 300 kcmil	1 x 2 AWG … 350 kcmil	1 x 2 AWG … 350 kcmil
			Stranded (Class B)	1x 4 AWG … 300 kcmil	1 x 2 AWG … 350 kcmil	1 x 2 AWG … 350 kcmil
			Solid (Class A)	-	-	-
		Copper cable (number of cables x cross-section range)	Stranded (Class B)	1x 4 AWG … 300 kcmil	1 x 2 AWG … 350 kcmil	1 x 2 AWG … 350 kcmil
			Solid (Class A)	-	-	-
		Stripped length of cable L		1.2 in	1.2 in	1.2 in
		Tightening torque		252 lb-in	275 lb-in	275 lb-in

Wire connector, large with or without control wire tap can be ordered:

- as a pack of 3
- as a pack of 4

Wire connector, 2 cables, with and without control wire tap

The wire connector, 2 cables, is available under separate article numbers depending on whether it is ordered with or without a control wire tap. With the exception of the hole for the control wire tap, both wire connectors are technically identical, i.e. the same cable cross sections can be connected to both variants.

Note

All control wire taps offered in the 3VA molded case circuit breaker portfolio are permitted only up to a maximum current of 15 A.

Suitable cable cross-sections: Cables up to a maximum of 2.5 mm^2 can be connected.

The wire connector, 2 cables is an external terminal, i.e. it projects beyond the external contour of the breaker's termination area. The 2-cable capacity of the terminal allows cables with large cross-sectional area to be connected.

The extended terminal cover plus the required assembly materials are supplied as standard with all wire connectors, 2 cables. This is used for insulation and provides degree of protection IP4x at the front of the molded case circuit breaker and degree of protection IP2x at the infeed side and load side (see chapter Insulating measures (Page 246)).

The table below shows all the types and sizes of cable which can be connected to a wire connector, 2 cables.

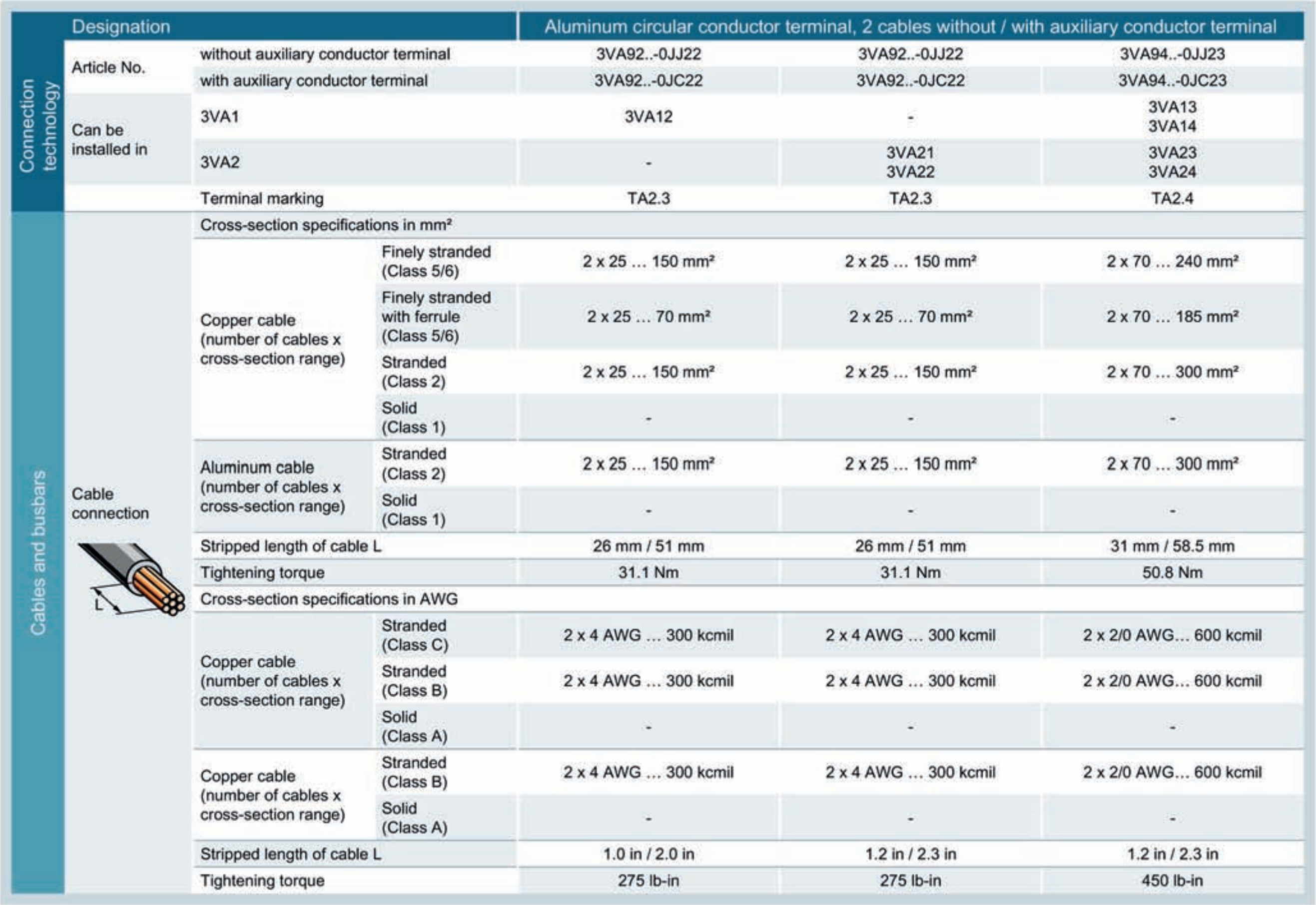

	Designation			Aluminum circular conductor terminal, 2 cables without / with auxiliary conductor terminal		
Connection technology	Article No.	without auxiliary conductor terminal		3VA92..-0JJ22	3VA92..-0JJ22	3VA94..-0JJ23
		with auxiliary conductor terminal		3VA92..-0JC22	3VA92..-0JC22	3VA94..-0JC23
	Can be installed in	3VA1		3VA12	-	3VA13 3VA14
		3VA2		-	3VA21 3VA22	3VA23 3VA24
		Terminal marking		TA2.3	TA2.3	TA2.4
Cables and busbars	Cable connection	Cross-section specifications in mm²				
		Copper cable (number of cables x cross-section range)	Finely stranded (Class 5/6)	2 x 25 … 150 mm²	2 x 25 … 150 mm²	2 x 70 … 240 mm²
			Finely stranded with ferrule (Class 5/6)	2 x 25 … 70 mm²	2 x 25 … 70 mm²	2 x 70 … 185 mm²
			Stranded (Class 2)	2 x 25 … 150 mm²	2 x 25 … 150 mm²	2 x 70 … 300 mm²
			Solid (Class 1)	-	-	-
		Aluminum cable (number of cables x cross-section range)	Stranded (Class 2)	2 x 25 … 150 mm²	2 x 25 … 150 mm²	2 x 70 … 300 mm²
			Solid (Class 1)	-	-	-
		Stripped length of cable L		26 mm / 51 mm	26 mm / 51 mm	31 mm / 58.5 mm
		Tightening torque		31.1 Nm	31.1 Nm	50.8 Nm
		Cross-section specifications in AWG				
		Copper cable (number of cables x cross-section range)	Stranded (Class C)	2 x 4 AWG … 300 kcmil	2 x 4 AWG … 300 kcmil	2 x 2/0 AWG… 600 kcmil
			Stranded (Class B)	2 x 4 AWG … 300 kcmil	2 x 4 AWG … 300 kcmil	2 x 2/0 AWG… 600 kcmil
			Solid (Class A)	-	-	-
		Copper cable (number of cables x cross-section range)	Stranded (Class B)	2 x 4 AWG … 300 kcmil	2 x 4 AWG … 300 kcmil	2 x 2/0 AWG… 600 kcmil
			Solid (Class A)	-	-	-
		Stripped length of cable L		1.0 in / 2.0 in	1.2 in / 2.3 in	1.2 in / 2.3 in
		Tightening torque		275 lb-in	275 lb-in	450 lb-in

Wire connector, 2 cables with or without control wire tap can be ordered:

- as a pack of 3
- as a pack of 4

Wire connector, 6 cables

The distribution wire connector, 6 cables is an external terminal, i.e. it projects beyond the external contour of the breaker's termination area. It can hold up to 6 cables. One of the six holes in the terminal can be used to implement a control wire tap.

The terminal cover extended plus the required assembly materials are supplied as standard with all distribution wire connectors, 6 cables. This is used for insulation and provides degree of protection IP4x at the front of the molded case circuit breaker and degree of protection IP2x at the infeed side and load side (see chapter Auxiliary conductor terminal (Page 269)).

The table below shows all the types and sizes of cable which can be connected to a distribution wire connector, 6 cables.

3VA1 molded case circuit breakers:

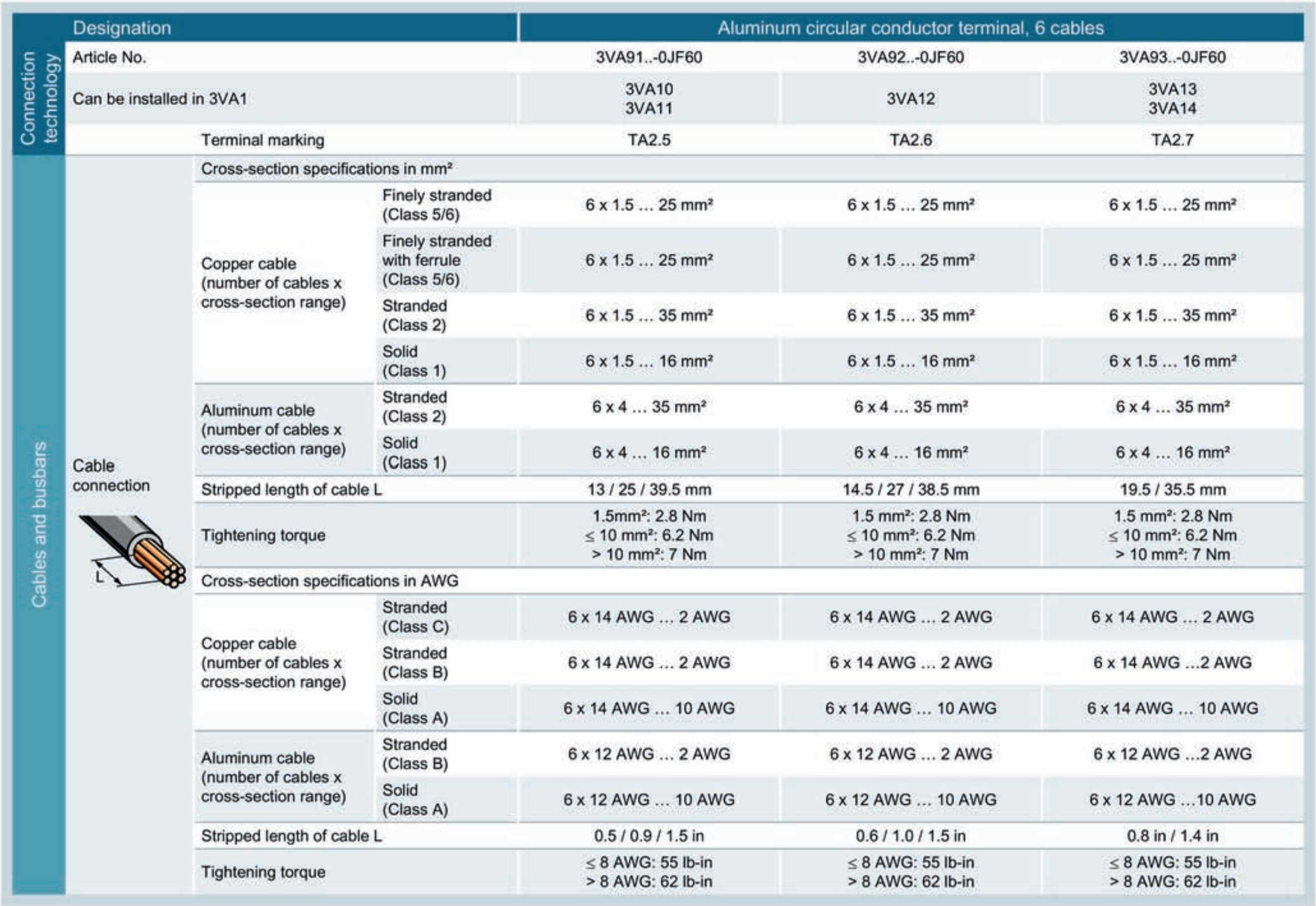

	Designation			Aluminum circular conductor terminal, 6 cables		
Connection technology	Article No.			3VA91..-0JF60	3VA92..-0JF60	3VA93..-0JF60
	Can be installed in 3VA1			3VA10 3VA11	3VA12	3VA13 3VA14
		Terminal marking		TA2.5	TA2.6	TA2.7
Cables and busbars	Cable connection	Cross-section specifications in mm²				
		Copper cable (number of cables x cross-section range)	Finely stranded (Class 5/6)	6 x 1.5 ... 25 mm²	6 x 1.5 ... 25 mm²	6 x 1.5 ... 25 mm²
			Finely stranded with ferrule (Class 5/6)	6 x 1.5 ... 25 mm²	6 x 1.5 ... 25 mm²	6 x 1.5 ... 25 mm²
			Stranded (Class 2)	6 x 1.5 ... 35 mm²	6 x 1.5 ... 35 mm²	6 x 1.5 ... 35 mm²
			Solid (Class 1)	6 x 1.5 ... 16 mm²	6 x 1.5 ... 16 mm²	6 x 1.5 ... 16 mm²
		Aluminum cable (number of cables x cross-section range)	Stranded (Class 2)	6 x 4 ... 35 mm²	6 x 4 ... 35 mm²	6 x 4 ... 35 mm²
			Solid (Class 1)	6 x 4 ... 16 mm²	6 x 4 ... 16 mm²	6 x 4 ... 16 mm²
		Stripped length of cable L		13 / 25 / 39.5 mm	14.5 / 27 / 38.5 mm	19.5 / 35.5 mm
		Tightening torque		1.5mm²: 2.8 Nm ≤ 10 mm²: 6.2 Nm > 10 mm²: 7 Nm	1.5 mm²: 2.8 Nm ≤ 10 mm²: 6.2 Nm > 10 mm²: 7 Nm	1.5 mm²: 2.8 Nm ≤ 10 mm²: 6.2 Nm > 10 mm²: 7 Nm
		Cross-section specifications in AWG				
		Copper cable (number of cables x cross-section range)	Stranded (Class C)	6 x 14 AWG ... 2 AWG	6 x 14 AWG ... 2 AWG	6 x 14 AWG ... 2 AWG
			Stranded (Class B)	6 x 14 AWG ... 2 AWG	6 x 14 AWG ... 2 AWG	6 x 14 AWG ...2 AWG
			Solid (Class A)	6 x 14 AWG ... 10 AWG	6 x 14 AWG ... 10 AWG	6 x 14 AWG ... 10 AWG
		Aluminum cable (number of cables x cross-section range)	Stranded (Class B)	6 x 12 AWG ... 2 AWG	6 x 12 AWG ... 2 AWG	6 x 12 AWG ...2 AWG
			Solid (Class A)	6 x 12 AWG ... 10 AWG	6 x 12 AWG ... 10 AWG	6 x 12 AWG ...10 AWG
		Stripped length of cable L		0.5 / 0.9 / 1.5 in	0.6 / 1.0 / 1.5 in	0.8 in / 1.4 in
		Tightening torque		≤ 8 AWG: 55 lb-in > 8 AWG: 62 lb-in	≤ 8 AWG: 55 lb-in > 8 AWG: 62 lb-in	≤ 8 AWG: 55 lb-in > 8 AWG: 62 lb-in

3VA2 molded case circuit breakers:

	Designation			Aluminum circular conductor terminal, 6 cables	
Connection technology	Article No.			3VA92..-0JF60	3VA93..-0JF60
	Can be installed in 3VA2			3VA20 3VA21 3VA22	3VA23 3VA24
		Terminal marking		TA2.6	TA2.7
Cables and busbars	Cable connection 	Cross-section specifications in mm²			
		Copper cable (number of cables x cross-section range)	Finely stranded (Class 5/6)	6 x 1.5 … 25 mm²	6 x 1.5 … 25 mm²
			Finely stranded with ferrule (Class 5/6)	6 x 1.5 … 25 mm²	6 x 1.5 … 25 mm²
			Stranded (Class 2)	6 x 1.5 … 35 mm²	6 x 1.5 … 35 mm²
			Solid (Class 1)	6 x 1.5 … 16 mm²	6 x 1.5 … 16 mm²
		Aluminum cable (number of cables x cross-section range)	Stranded (Class 2)	6 x 4 … 35 mm²	6 x 4 … 35 mm²
			Solid (Class 1)	6 x 4 … 16 mm²	6 x 4 … 16 mm²
		Stripped length of cable L		14.5 / 27 / 38.5 mm	19.5 / 35.5 mm
		Tightening torque		1.5 mm²: 2.8 Nm ≤ 10 mm²: 6.2 Nm > 10 mm²: 7 Nm	1.5 mm²: 2.8 Nm ≤ 10 mm²: 6.2 Nm > 10 mm²: 7 Nm
		Cross-section specifications in AWG			
		Copper cable (number of cables x cross-section range)	Stranded (Class C)	6 x 14 AWG … 2 AWG	6 x 14 AWG … 2 AWG
			Stranded (Class B)	6 x 14 AWG … 2 AWG	6 x 14 AWG …2 AWG
			Solid (Class A)	6 x 14 AWG … 10 AWG	6 x 14 AWG … 10 AWG
		Aluminum cable (number of cables x cross-section range)	Stranded (Class B)	6 x 12 AWG … 2 AWG	6 x 12 AWG …2 AWG
			Solid (Class A)	6 x 12 AWG … 10 AWG	6 x 12 AWG …10 AWG
		Stripped length of cable L		0.6 / 1.0 / 1.5 in	0.8 in / 1.4 in
		Tightening torque		≤ 8 AWG: 55 lb-in > 8 AWG: 62 lb-in	≤ 8 AWG: 55 lb-in > 8 AWG: 62 lb-in

Distribution wire connectors, 6 cables can be ordered:

- as a pack of 3
- as a pack of 4

Wire connectors for 3VA25 molded case circuit breaker

The 3VA25 molded case circuit breaker is shipped with a preassembled nut keeper kit. Wire connectors are also available in 3-pole and 4-pole versions.

An auxiliary connection can be implemented using a special control wire tap. For further information, please refer to chapter Auxiliary conductor terminal (Page 269).

The table below shows all the types and sizes of cable which can be connected to wire connectors for the 3VA25 molded case circuit breaker.

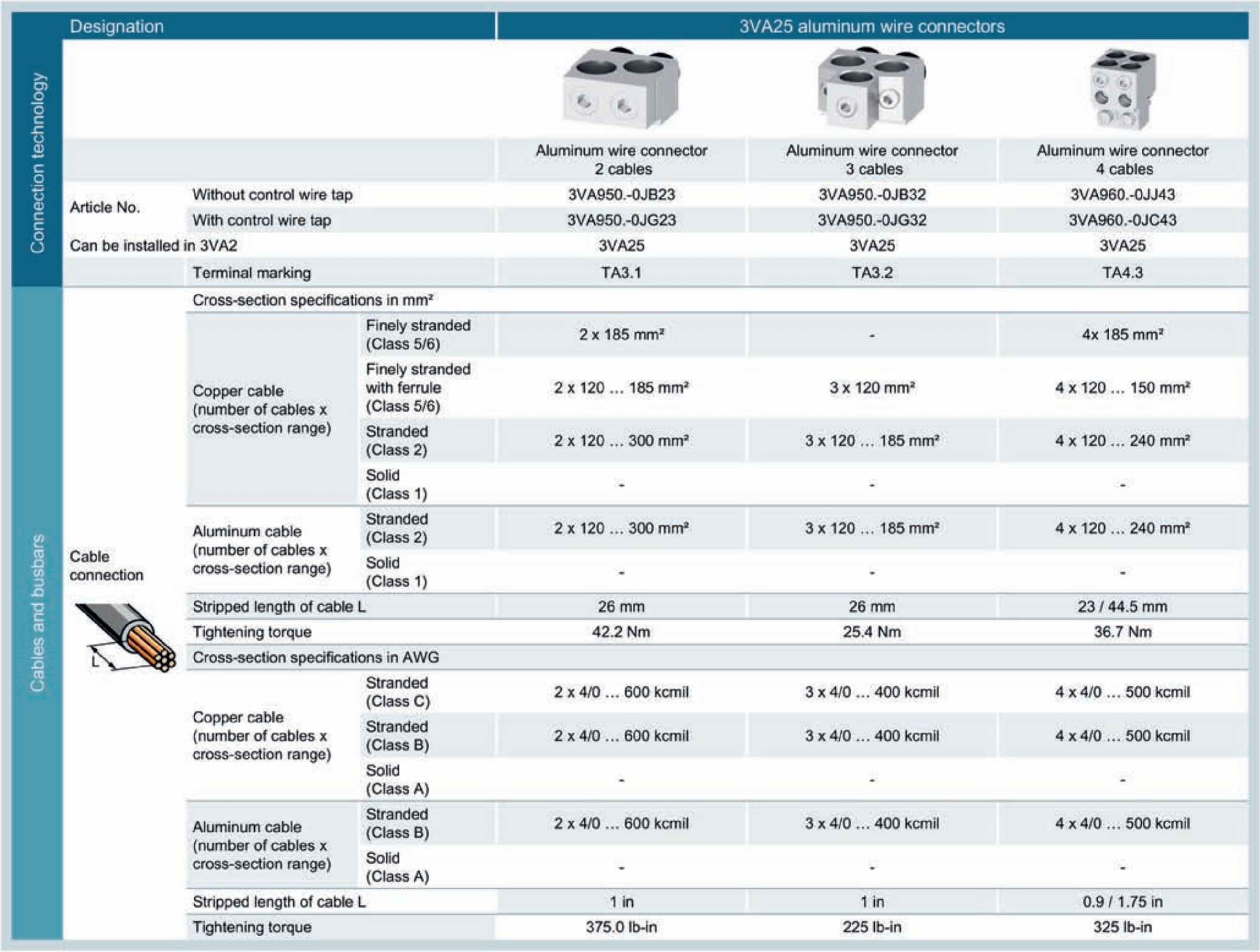

Designation				3VA25 aluminum wire connectors		
Connection technology				Aluminum wire connector 2 cables	Aluminum wire connector 3 cables	Aluminum wire connector 4 cables
	Article No.	Without control wire tap		3VA950.-0JB23	3VA950.-0JB32	3VA960.-0JJ43
		With control wire tap		3VA950.-0JG23	3VA950.-0JG32	3VA960.-0JC43
	Can be installed in 3VA2			3VA25	3VA25	3VA25
		Terminal marking		TA3.1	TA3.2	TA4.3
Cables and busbars	Cable connection	Cross-section specifications in mm²				
		Copper cable (number of cables x cross-section range)	Finely stranded (Class 5/6)	2 x 185 mm²	-	4x 185 mm²
			Finely stranded with ferrule (Class 5/6)	2 x 120 … 185 mm²	3 x 120 mm²	4 x 120 … 150 mm²
			Stranded (Class 2)	2 x 120 … 300 mm²	3 x 120 … 185 mm²	4 x 120 … 240 mm²
			Solid (Class 1)	-	-	-
		Aluminum cable (number of cables x cross-section range)	Stranded (Class 2)	2 x 120 … 300 mm²	3 x 120 … 185 mm²	4 x 120 … 240 mm²
			Solid (Class 1)	-	-	-
		Stripped length of cable L		26 mm	26 mm	23 / 44.5 mm
		Tightening torque		42.2 Nm	25.4 Nm	36.7 Nm
		Cross-section specifications in AWG				
		Copper cable (number of cables x cross-section range)	Stranded (Class C)	2 x 4/0 … 600 kcmil	3 x 4/0 … 400 kcmil	4 x 4/0 … 500 kcmil
			Stranded (Class B)	2 x 4/0 … 600 kcmil	3 x 4/0 … 400 kcmil	4 x 4/0 … 500 kcmil
			Solid (Class A)	-	-	-
		Aluminum cable (number of cables x cross-section range)	Stranded (Class B)	2 x 4/0 … 600 kcmil	3 x 4/0 … 400 kcmil	4 x 4/0 … 500 kcmil
			Solid (Class A)	-	-	-
		Stripped length of cable L		1 in	1 in	0.9 / 1.75 in
		Tightening torque		375.0 lb-in	225 lb-in	325 lb-in

The wire connectors for the 3VA25 molded case circuit breaker can be ordered:

- as a pack of 3
- as a pack of 4

Assembly materials for wire connectors and the necessary insulation measure are included in the scope of supply.

4.3.2.3 Front busbar and cable lug connections

The diagram below illustrates all the components available for implementing a busbar or compression lug connection on the front panel of the 3VA molded case circuit breaker.

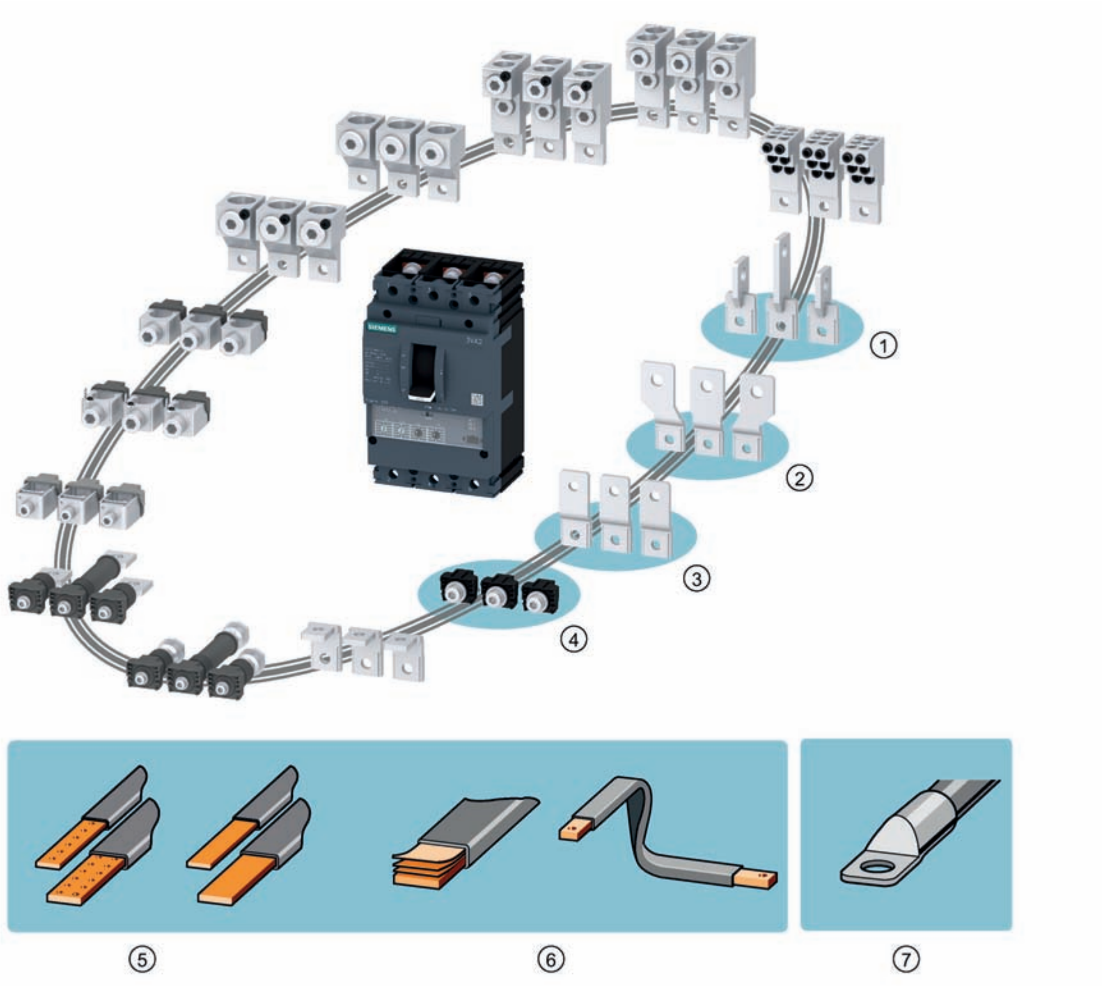

Connection technology

① Bus connectors edgewise
② Front bus connectors offset
③ Front bus connectors extended
④ Nut keeper kit

Cables and busbars

⑤ Busbars
⑥ Flexible busbars
⑦ Compression lugs

Nut keeper kit

With the nut keeper kit, it is possible to connect busbars and compression lugs directly to the terminal of the 3VA molded case circuit breaker.
An auxiliary connection can be implemented using a special control wire tap. For further information, please refer to chapter Auxiliary conductor terminal (Page 269).

The table below provides an overview of the minimum sizes of cables and busbars which can be installed using the nut keeper kit.

	Designation				Nut keeper kit				
Connection technology	Article No.				3VA911.-0QA00	3VA921.-0QA00	3VA920.-0QA00	3VA940.-0QA00	3VA960.-0QA00
	Can be installed in	3VA1			3VA10 3VA11	3VA12	-	3VA13 3VA14	-
		3VA2			-	-	3VA20 3VA21 3VA22	3VA23 3VA24	3VA25
Cables and busbars	Front busbar connector (rigid & flexible) 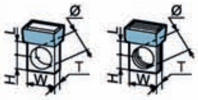 3VA25 only (rigid & flexible): 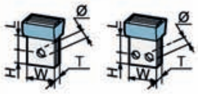	Maximum width	W_{max}	[mm]	17	25	25	35	50
				[in]	0.66	0.98	0.98	1.37	2.00
		Thickness	T	[mm]	≤ 6.5	≤ 8	≤ 8	1 … 10	4 … 29
				[in]	≤ 0.25	≤ 0.31	≤ 0.31	0.04 … 0.39	0.16 … 1.14
		Length L	L	[mm]	8 … 10	10 … 12	10 … 12	17 … 20	Single hole: 16 … 21 Double hole: 13 … 18
				[in]	0.32 … 0.39	0.40 … 0.47	0.40 … 0.47	0.67 … 0.78	Single hole: 0.63 … 0.82 Double hole: 0.51 … 0.71
		Length H	H	[mm]	8	10	10	14.5	14.5 / 18
				[in]	0.31	0.39	0.39	0.57	0.57 / 0.71
		Hole diameter	Ø	[mm]	6.5	8.5	8.5	11	10.5
				[in]	1/4	5/16	5/16	3/8	0.41
		Tightening torque		[Nm]	8	20	20	40	31
				[lb-in]	70	177	177	354	275
		Tool: Hexagon socket wrench		[mm]	4	6	6	8	8
	Cable connection with compression cable 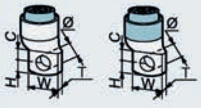	Maximum width	W_{max}	[mm]	17	25	25	35	On request
				[in]	0.66	0.98	0.98	1.37	On request
		Thickness	T	[mm]	≤ 6.5	≤ 8	≤ 8	1 … 10	On request
				[in]	≤ 0.25	≤ 0.31	≤ 0.31	0.04 … 0.39	On request
		Length C_{min}	C_{min}	[mm]	8	10	10	15	On request
				[in]	0.31	0.40	0.40	0.59	On request
		Length H	H	[mm]	8	10	10	14.5	On request
				[in]	0.31	0.39	0.39	0.57	On request
		Hole diameter	Ø	[mm]	6.5	8.5	8.5	11	On request
				[in]	1/4	5/16	5/16	3/8	On request
		Tightening torque		[Nm]	8	20	20	40	On request
				[lb-in]	70	177	177	354	On request
		Tool: Hexagon socket wrench		[mm]	4	6	6	8	On request

Nut keeper kits can be ordered:

- as a pack of 3
- as a pack of 4

Front bus connectors extended

Bus connectors extended can be installed to connect larger busbars and compression lugs outside the termination area of a 3VA molded case circuit breaker. The front bus connectors therefore extend the terminal of the breaker.

All front bus connectors extended are supplied as standard with phase barriers to provide insulation between individual phases. For further information, please refer to chapter Insulating measures (Page 246).

An auxiliary connection can be implemented using a special control wire tap. For further information, please refer to chapter Auxiliary conductor terminal (Page 269).

The table below provides an overview of the minimum sizes of cables and busbars which can be installed using front bus connectors extended.

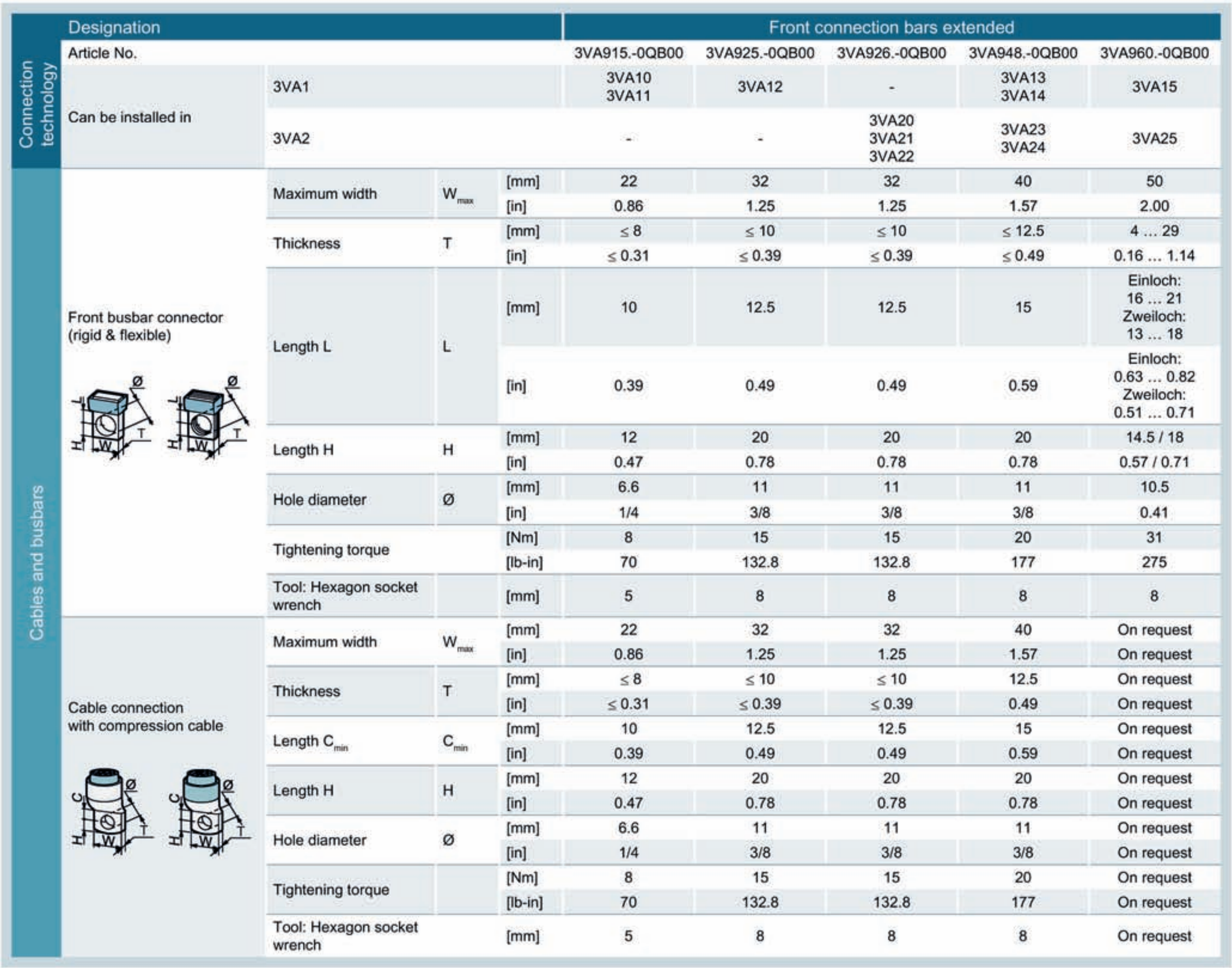

	Designation				Front connection bars extended				
Connection technology	Article No.				3VA915.-0QB00	3VA925.-0QB00	3VA926.-0QB00	3VA948.-0QB00	3VA960.-0QB00
	Can be installed in	3VA1			3VA10 3VA11	3VA12	-	3VA13 3VA14	3VA15
		3VA2			-	-	3VA20 3VA21 3VA22	3VA23 3VA24	3VA25
Cables and busbars	Front busbar connector (rigid & flexible)	Maximum width	W_{max}	[mm]	22	32	32	40	50
				[in]	0.86	1.25	1.25	1.57	2.00
		Thickness	T	[mm]	≤ 8	≤ 10	≤ 10	≤ 12.5	4 … 29
				[in]	≤ 0.31	≤ 0.39	≤ 0.39	≤ 0.49	0.16 … 1.14
		Length L	L	[mm]	10	12.5	12.5	15	Einloch: 16 … 21 Zweiloch: 13 … 18
				[in]	0.39	0.49	0.49	0.59	Einloch: 0.63 … 0.82 Zweiloch: 0.51 … 0.71
		Length H	H	[mm]	12	20	20	20	14.5 / 18
				[in]	0.47	0.78	0.78	0.78	0.57 / 0.71
		Hole diameter	Ø	[mm]	6.6	11	11	11	10.5
				[in]	1/4	3/8	3/8	3/8	0.41
		Tightening torque		[Nm]	8	15	15	20	31
				[lb-in]	70	132.8	132.8	177	275
		Tool: Hexagon socket wrench		[mm]	5	8	8	8	8
	Cable connection with compression cable	Maximum width	W_{max}	[mm]	22	32	32	40	On request
				[in]	0.86	1.25	1.25	1.57	On request
		Thickness	T	[mm]	≤ 8	≤ 10	≤ 10	12.5	On request
				[in]	≤ 0.31	≤ 0.39	≤ 0.39	0.49	On request
		Length C_{min}	C_{min}	[mm]	10	12.5	12.5	15	On request
				[in]	0.39	0.49	0.49	0.59	On request
		Length H	H	[mm]	12	20	20	20	On request
				[in]	0.47	0.78	0.78	0.78	On request
		Hole diameter	Ø	[mm]	6.6	11	11	11	On request
				[in]	1/4	3/8	3/8	3/8	On request
		Tightening torque		[Nm]	8	15	15	20	On request
				[lb-in]	70	132.8	132.8	177	On request
		Tool: Hexagon socket wrench		[mm]	5	8	8	8	On request

Front bus connectors extended can be ordered:

- as a pack of 3
- as a pack of 4

Front bus connectors offset

Front bus connectors offset can be installed to connect very large busbars and compression lugs outside the termination area of a 3VA molded case circuit breaker. Front bus connectors offset increase the distance between pole centers of the terminals of the molded case circuit breaker.

Distance between pole centers with front bus connectors offset:

- 3VA10 / 3VA11: 35 mm
- 3VA12 / 3VA20 / 3VA21 / 3VA22: 45 mm
- 3VA13 / 3VA14 / 3VA23 / 3VA24: 70 mm

All front bus connectors offset are supplied as standard with phase barriers to provide insulation between individual phases. For further information, please refer to chapter Insulating measures (Page 246).

An auxiliary connection can be implemented using a special control wire tap. For further information, please refer to chapter Auxiliary conductor terminal (Page 269).

The table below provides an overview of the minimum sizes of cables and busbars which can be installed using front bus connectors offset.

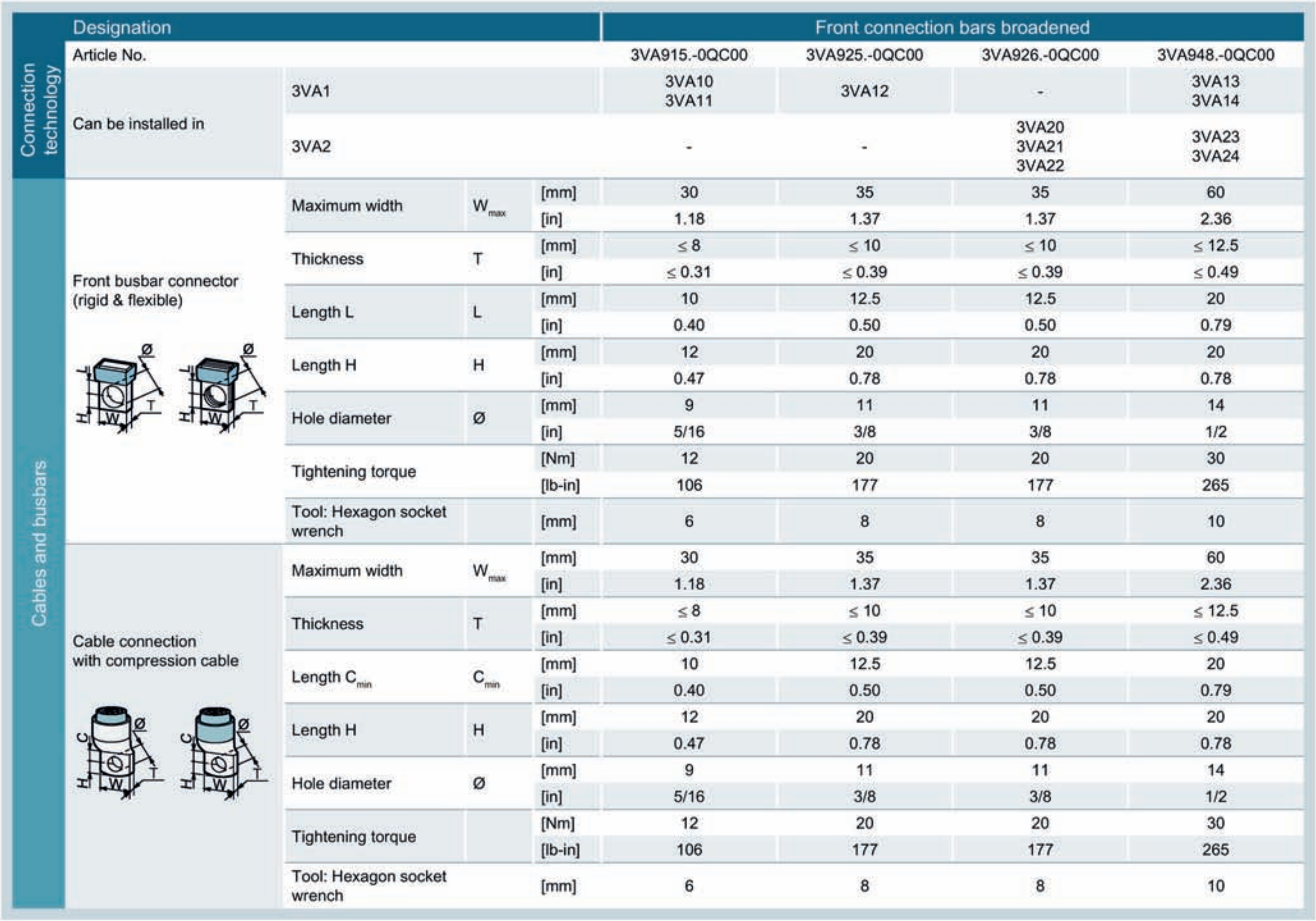

	Designation				Front connection bars broadened			
Connection technology	Article No.				3VA915.-0QC00	3VA925.-0QC00	3VA926.-0QC00	3VA948.-0QC00
	Can be installed in	3VA1			3VA10 3VA11	3VA12	-	3VA13 3VA14
		3VA2			-	-	3VA20 3VA21 3VA22	3VA23 3VA24
Cables and busbars	Front busbar connector (rigid & flexible)	Maximum width	W_{max}	[mm]	30	35	35	60
				[in]	1.18	1.37	1.37	2.36
		Thickness	T	[mm]	≤ 8	≤ 10	≤ 10	≤ 12.5
				[in]	≤ 0.31	≤ 0.39	≤ 0.39	≤ 0.49
		Length L	L	[mm]	10	12.5	12.5	20
				[in]	0.40	0.50	0.50	0.79
		Length H	H	[mm]	12	20	20	20
				[in]	0.47	0.78	0.78	0.78
		Hole diameter	Ø	[mm]	9	11	11	14
				[in]	5/16	3/8	3/8	1/2
		Tightening torque		[Nm]	12	20	20	30
				[lb-in]	106	177	177	265
		Tool: Hexagon socket wrench		[mm]	6	8	8	10
	Cable connection with compression cable	Maximum width	W_{max}	[mm]	30	35	35	60
				[in]	1.18	1.37	1.37	2.36
		Thickness	T	[mm]	≤ 8	≤ 10	≤ 10	≤ 12.5
				[in]	≤ 0.31	≤ 0.39	≤ 0.39	≤ 0.49
		Length C_{min}	C_{min}	[mm]	10	12.5	12.5	20
				[in]	0.40	0.50	0.50	0.79
		Length H	H	[mm]	12	20	20	20
				[in]	0.47	0.78	0.78	0.78
		Hole diameter	Ø	[mm]	9	11	11	14
				[in]	5/16	3/8	3/8	1/2
		Tightening torque		[Nm]	12	20	20	30
				[lb-in]	106	177	177	265
		Tool: Hexagon socket wrench		[mm]	6	8	8	10

Front bus connectors offset can be ordered:

- as a pack of 3
- as a pack of 4

Bus connectors edgewise

Bus connectors edgewise can be installed to connect large busbars and compression lugs outside the termination area of a 3VA molded case circuit breaker. The terminal of the breaker is turned by 90° when bus connectors edgewise are fitted.

All bus connectors edgewise are supplied as standard with phase barriers to provide insulation between individual phases. For further information, please refer to chapter Insulating measures (Page 246).

An auxiliary connection can be implemented using a special control wire tap. For further information, please refer to chapter Auxiliary conductor terminal (Page 269).

The table below provides an overview of the minimum sizes of cables and busbars which can be installed using bus connectors edgewise.

	Designation				Front connection bars edgewise			
	Article No.				3VA915.-0QD00	3VA925.-0QD00	3VA926.-0QD00	3VA948.-0QD00
Connection technology	Can be installed in	3VA1			3VA10 3VA11	3VA12	-	3VA13 3VA14
		3VA2			-	-	3VA20 3VA21 3VA22	3VA23 3VA24
Cables and busbars	Front busbar connector (rigid & flexible) 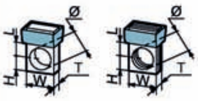	Maximum width	W_{max}	[mm]	20	25	25	40
				[in]	0.78	0.98	0.98	1.57
		Thickness	T	[mm]	≤ 6	≤ 7	≤ 7	≤ 8
				[in]	≤ 0.23	≤ 0.27	≤ 0.27	≤ 0.31
		Length L	L	[mm]	10	12.5	12.5	15
				[in]	0.40	0.50	0.50	0.59
		Length H	H	[mm]	12	15	15	20
				[in]	0.47	0.59	0.59	0.78
		Hole diameter	Ø	[mm]	6.6	11	11	11
				[in]	1/4	3/8	3/8	3/8
		Tightening torque		[Nm]	8	20	20	30
				[lb-in]	70	177	177	265
		Tool: Hexagon socket wrench		[mm]	6	8	8	8
	Cable connection with compression cable 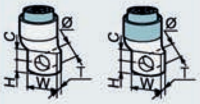	Maximum width	W_{max}	[mm]	20	25	25	40
				[in]	0.78	0.98	0.98	1.57
		Thickness	T	[mm]	≤ 6	≤ 7	≤ 7	≤ 8
				[in]	≤ 0.23	≤ 0.27	≤ 0.27	≤ 0.31
		Length C_{min}	C_{min}	[mm]	10	12.5	12.5	15
				[in]	0.40	0.50	0.50	0.59
		Length H	H	[mm]	12	15	15	20
				[in]	0.47	0.59	0.59	0.78
		Hole diameter	Ø	[mm]	6.6	11	11	11
				[in]	1/4	3/8	3/8	3/8
		Tightening torque		[Nm]	8	20	20	30
				[lb-in]	70	177	177	265
		Tool: Hexagon socket wrench		[mm]	6	8	8	8

Bus connectors edgewise can be ordered:

- as a pack of 3
- as a pack of 4

4.3.2.4 Rear busbar and cable lug connections

The diagram below illustrates all the components available for implementing a busbar or compression lug connection on the rear panel of the 3VA molded case circuit breaker.

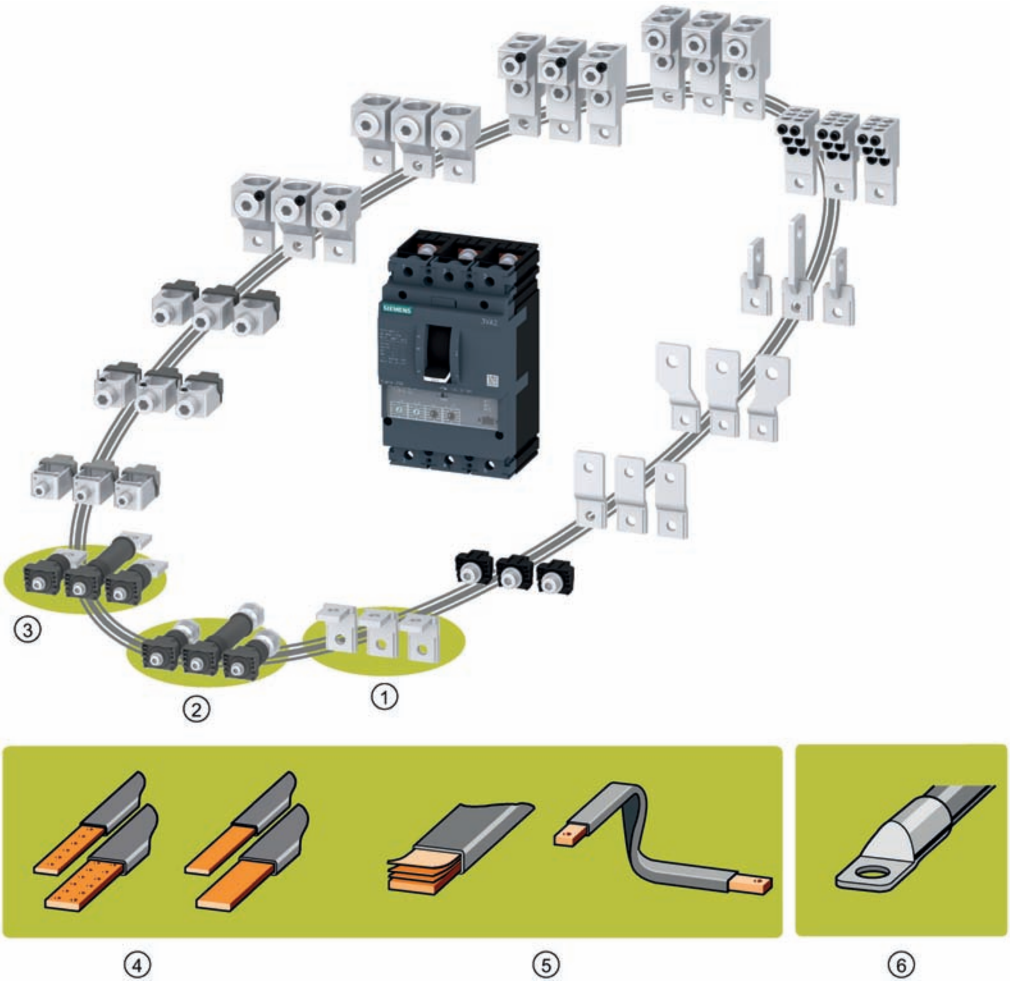

Connection technology

① Nut keeper kit, right-angled

② Rear connection stud round

③ Rear connection stud flat

Cables and busbars

④ Busbars

⑤ Flexible busbars

⑥ Compression lugs

Nut keeper kit, right-angled

The right-angled nut keeper kit can be installed to connect busbars and compression lugs outside the termination area on the rear panel of a 3VA molded case circuit breaker. The terminal of the molded case circuit breaker is turned by 90° at right angles, allowing the busbar or compression lug to be connected at the rear.

Note

Right-angled nut keeper kits may only be connected to phases 1, 3 and 5 (top terminals) owing to the gases expelled by 3VA molded case circuit breakers.

In addition, a box terminal can also be attached to the right-angled nut keeper kit allowing direct connection of a cable.

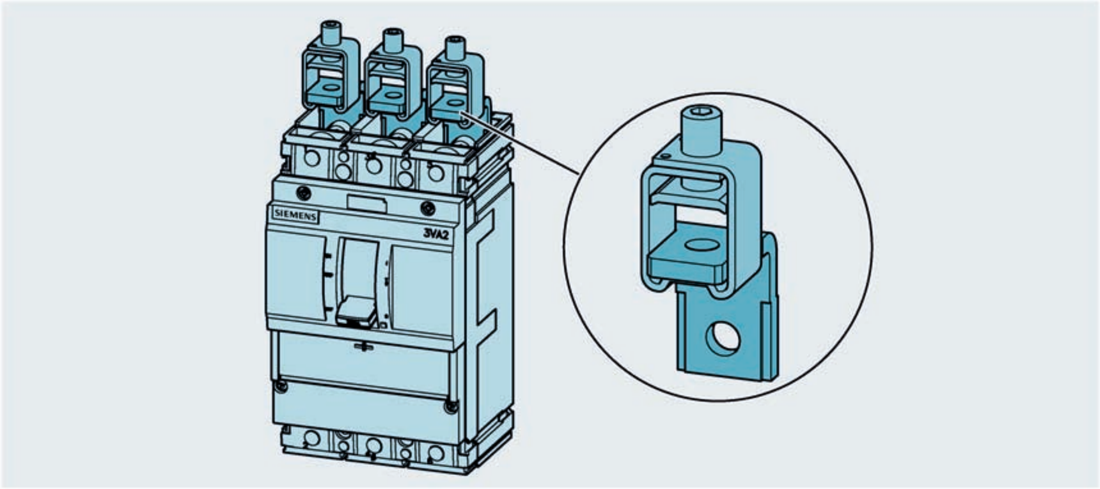

All right-angled nut keeper kits are supplied as standard with phase barriers to provide insulation between individual phases (see chapter Insulating measures (Page 246)).

An auxiliary connection can be implemented using a special control wire tap. For further information, please refer to chapter Auxiliary conductor terminal (Page 269).

The table below provides an overview of the minimum sizes of cables and busbars which can be installed using the right-angled nut keeper kit.

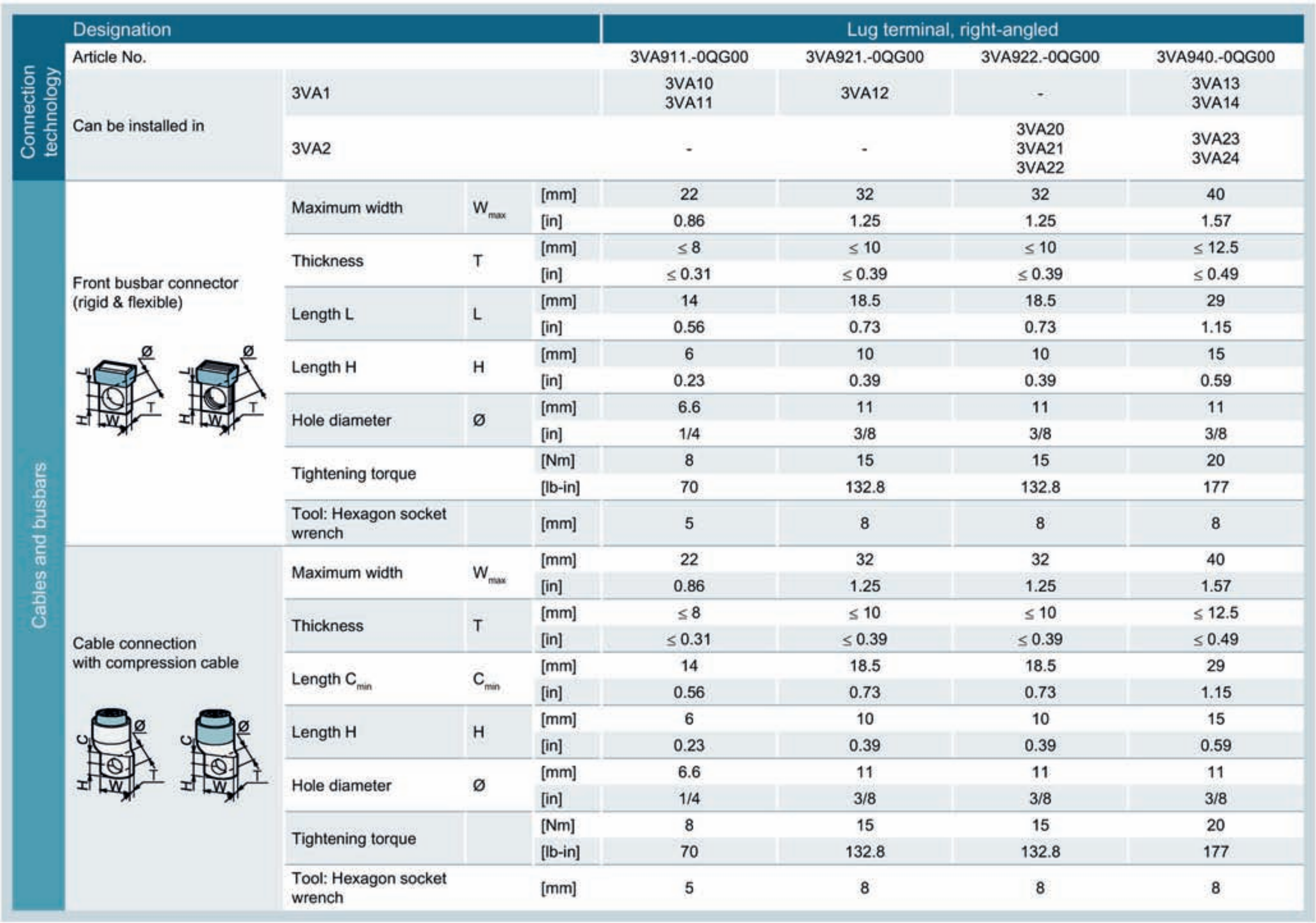

	Designation				Lug terminal, right-angled			
Connection technology	Article No.				3VA911.-0QG00	3VA921.-0QG00	3VA922.-0QG00	3VA940.-0QG00
	Can be installed in	3VA1			3VA10 3VA11	3VA12	-	3VA13 3VA14
		3VA2			-	-	3VA20 3VA21 3VA22	3VA23 3VA24
Cables and busbars	Front busbar connector (rigid & flexible)	Maximum width	W_{max}	[mm]	22	32	32	40
				[in]	0.86	1.25	1.25	1.57
		Thickness	T	[mm]	≤ 8	≤ 10	≤ 10	≤ 12.5
				[in]	≤ 0.31	≤ 0.39	≤ 0.39	≤ 0.49
		Length L	L	[mm]	14	18.5	18.5	29
				[in]	0.56	0.73	0.73	1.15
		Length H	H	[mm]	6	10	10	15
				[in]	0.23	0.39	0.39	0.59
		Hole diameter	Ø	[mm]	6.6	11	11	11
				[in]	1/4	3/8	3/8	3/8
		Tightening torque		[Nm]	8	15	15	20
				[lb-in]	70	132.8	132.8	177
		Tool: Hexagon socket wrench		[mm]	5	8	8	8
	Cable connection with compression cable	Maximum width	W_{max}	[mm]	22	32	32	40
				[in]	0.86	1.25	1.25	1.57
		Thickness	T	[mm]	≤ 8	≤ 10	≤ 10	≤ 12.5
				[in]	≤ 0.31	≤ 0.39	≤ 0.39	≤ 0.49
		Length C_{min}	C_{min}	[mm]	14	18.5	18.5	29
				[in]	0.56	0.73	0.73	1.15
		Length H	H	[mm]	6	10	10	15
				[in]	0.23	0.39	0.39	0.59
		Hole diameter	Ø	[mm]	6.6	11	11	11
				[in]	1/4	3/8	3/8	3/8
		Tightening torque		[Nm]	8	15	15	20
				[lb-in]	70	132.8	132.8	177
		Tool: Hexagon socket wrench		[mm]	5	8	8	8

Right-angled nut keeper kits can be ordered:

- as a pack of 3
- as a pack of 4

Rear connection stud round

The rear connection studs round can be installed to connect busbars and compression lugs to the rear panel of a 3VA molded case circuit breaker.

The dimensions of rear connection studs are given in the table below:

	Designation				Rear connection stud round			
Connection technology	Article No.				3VA911.-0QF00	3VA921.-0QF00	3VA920.-0QF00	3VA940.-0QF00
	Can be installed in	3VA1			3VA10 3VA11	3VA12	-	3VA13 3VA14
		3VA2			-	-	3VA20 3VA21 3VA22	3VA23 3VA24
Dimensions of rear connection stud round	Dimension drawing 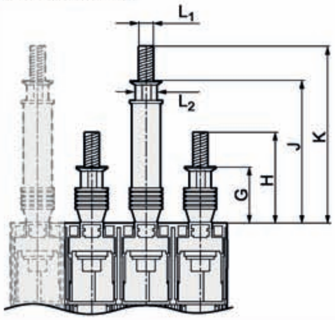	G		[mm]	28	36	36	45
				[in]	1.10	1.42	1.42	1.77
		H		[mm]	66	59	59	75
				[in]	2.60	2.32	2.32	2.95
		J		[mm]	85	93	93	105
				[in]	3.35	3.66	3.66	4.13
		K		[mm]	123	116	116	135
				[in]	4.84	4.57	4.57	5.31
		L1	Hexagon nut		M8	M10	M10	M12
			Hexagon nut width across flats		17	16	16	18
			Hexagon nut tightening torque	[Nm]	12	10	10	20
		L2	Round connection stud width across flats		17[1]	14	14	17
	Drilling pattern for fixed-mounted circuit breaker 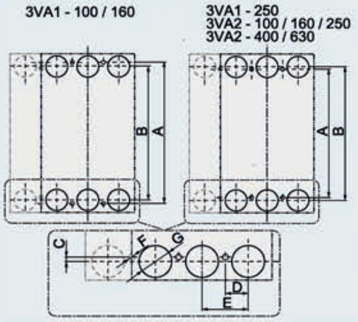	A		[mm]	114.50	123.50	146.00	180.00
				[in]	4.51	4.86	5.75	7.09
		B		[mm]	107.80	134.00	157.00	200.00
				[in]	4.24	5.28	6.18	7.87
		C		[mm]	3.50	5.25	5.50	10.00
				[in]	0.14	0.21	0.22	0.39
		D		[mm]	12.70	17.50	17.50	23.00
				[in]	0.50	0.69	0.69	0.91
		E		[mm]	25.40	35.00	35.00	46.00
				[in]	1.00	1.38	1.38	1.81
		F		[mm]	4.00	4.50	4.50	5.50
				[in]	0.16	0.18	0.18	0.22
		G		[mm]	17.00	24.50	24.50	34.00
				[in]	0.67	0.96	0.96	1.34
	Drilling pattern for socket, plug-in/draw-out technology 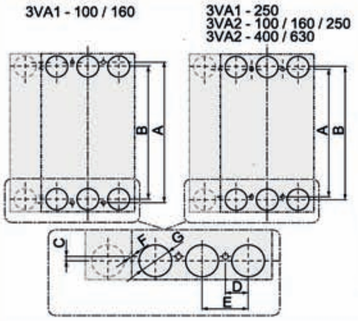	A		[mm]	160.50	185.50	209.00	259.00
				[in]	6.32	7.30	8.23	10.20
		B		[mm]	153.80	196.00	220.00	279.00
				[in]	6.06	7.72	8.66	10.98
		C		[mm]	3.50	5.25	5.50	10.00
				[in]	0.14	0.21	0.22	0.39
		D		[mm]	12.70	17.50	17.50	23.00
				[in]	0.50	0.69	0.69	0.91
		E		[mm]	25.40	35.00	35.00	46.00
				[in]	1.00	1.38	1.38	1.81
		F		[mm]	4.00	4.50	4.50	5.50
				[in]	0.16	0.18	0.18	0.22
		G		[mm]	17.00	24.50	24.50	34.00
				[in]	0.67	0.96	0.96	1.34

[1] Width across flats of the supplied lock nut

Rear connection studs round can be ordered:

- as a pack of 3 (2 short connection studs and 1 long connection stud)
- as a pack of 4 (2 short studs and 2 long studs)
- as a pack of 1 (1 short connection stud)
- as a pack of 1 (1 long connection stud)

Note

In order to achieve degree of protection IP40, terminal covers (flat version) must also be attached when a rear connection stud round is installed.

Rear connection stud flat

The rear connection stud flat can be installed to connect busbars and compression lugs to the rear panel of a 3VA molded case circuit breaker.

The rear connection stud flat can be rotated in steps of 45°, i.e. it can be installed at an angle of 0°, 45° or 90°:

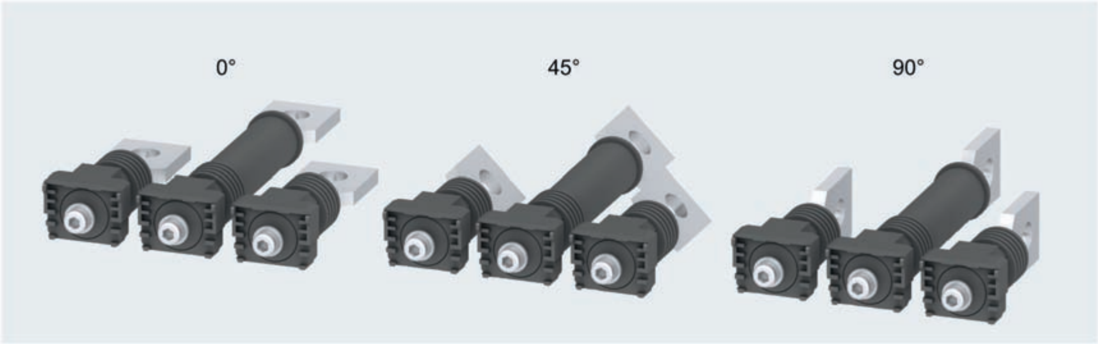

Note

In order to achieve degree of protection IP40, terminal covers (flat version) must also be attached when a rear connection stud flat is installed.

The dimensions of rear connection studs flat are stated in the table below:

	Designation				Rear connection stud flat			
Connection technology	Article No.				3VA911.-0QE00	3VA921.-0QE00	3VA920.-0QE00	3VA940.-0QE00
	Can be installed in	3VA1			3VA10 3VA11	3VA12	-	3VA13 3VA14
		3VA2			-	-	3VA20 3VA21 3VA22	3VA23 3VA24
Dimensions of rear connection stud flat	Dimension drawing 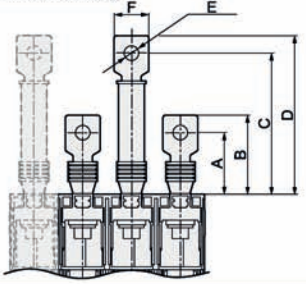	A	[mm]		51.00	43.00	43.00	50.00
			[in]		2.01	1.69	1.69	1.97
		B	[mm]		63.00	55.50	55.50	65.00
			[in]		2.48	2.19	2.19	2.56
		C	[mm]		108.00	100.00	100.00	115.00
			[in]		4.25	3.94	3.94	4.53
		D	[mm]		120.50	112.50	112.50	130.00
			[in]		4.74	4.43	4.43	5.12
		E	[mm]		8.40	10.50	10.50	13.20
			[in]		0.33	0.41	0.41	0.52
		F	[mm]		16.00	22.00	22.00	29.40
			[in]		0.63	0.87	0.87	1.16
	Drilling pattern for fixed-mounted circuit breaker 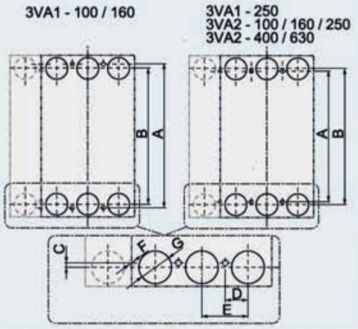	A	[mm]		114.50	123.50	146.00	180.00
			[in]		4.51	4.86	5.75	7.09
		B	[mm]		107.80	134.00	157.00	200.00
			[in]		4.24	5.28	6.18	7.87
		C	[mm]		3.50	5.25	5.50	10.00
			[in]		0.14	0.21	0.22	0.39
		D	[mm]		12.70	17.50	17.50	23.00
			[in]		0.50	0.69	0.69	0.91
		E	[mm]		25.40	35.00	35.00	46.00
			[in]		1.00	1.38	1.38	1.81
		F	[mm]		4.00	4.50	4.50	5.50
			[in]		0.16	0.18	0.18	0.22
		G	[mm]		17.00	24.50	24.50	34.00
			[in]		0.67	0.96	0.96	1.34
	Drilling pattern for socket, plug-in/draw-out technology 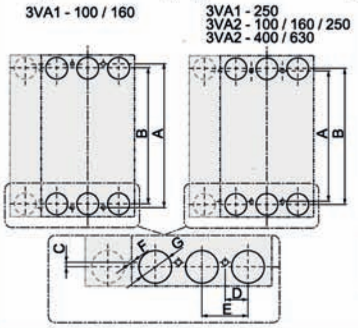	A	[mm]		160.50	185.50	209.00	259.00
			[in]		6.32	7.30	8.23	10.20
		B	[mm]		153.80	196.00	220.00	279.00
			[in]		6.06	7.72	8.66	10.98
		C	[mm]		3.50	5.25	5.50	10.00
			[in]		0.14	0.21	0.22	0.39
		D	[mm]		12.70	17.50	17.50	23.00
			[in]		0.50	0.69	0.69	0.91
		E	[mm]		25.40	35.00	35.00	46.00
			[in]		1.00	1.38	1.38	1.81
		F	[mm]		4.00	4.50	4.50	5.50
			[in]		0.16	0.18	0.18	0.22
		G	[mm]		17.00	24.50	24.50	34.00
			[in]		0.67	0.96	0.96	1.34

Rear connection studs flat can be ordered:

- as a pack of 3 (2 short connection studs flat and 1 long connection stud flat)
- as a pack of 4 (2 short connection studs flat and 2 long connection studs flat)
- as a pack of 1 (1 short connection stud flat)
- as a pack of 1 (1 long connection stud flat)

4.3.3 Further connection accessories

4.3.3.1 Insulating measures

The portfolio of connection accessories includes a broad range of insulating measures. The diagram below provides an overview of insulation accessories available for 3VA molded case circuit breakers.

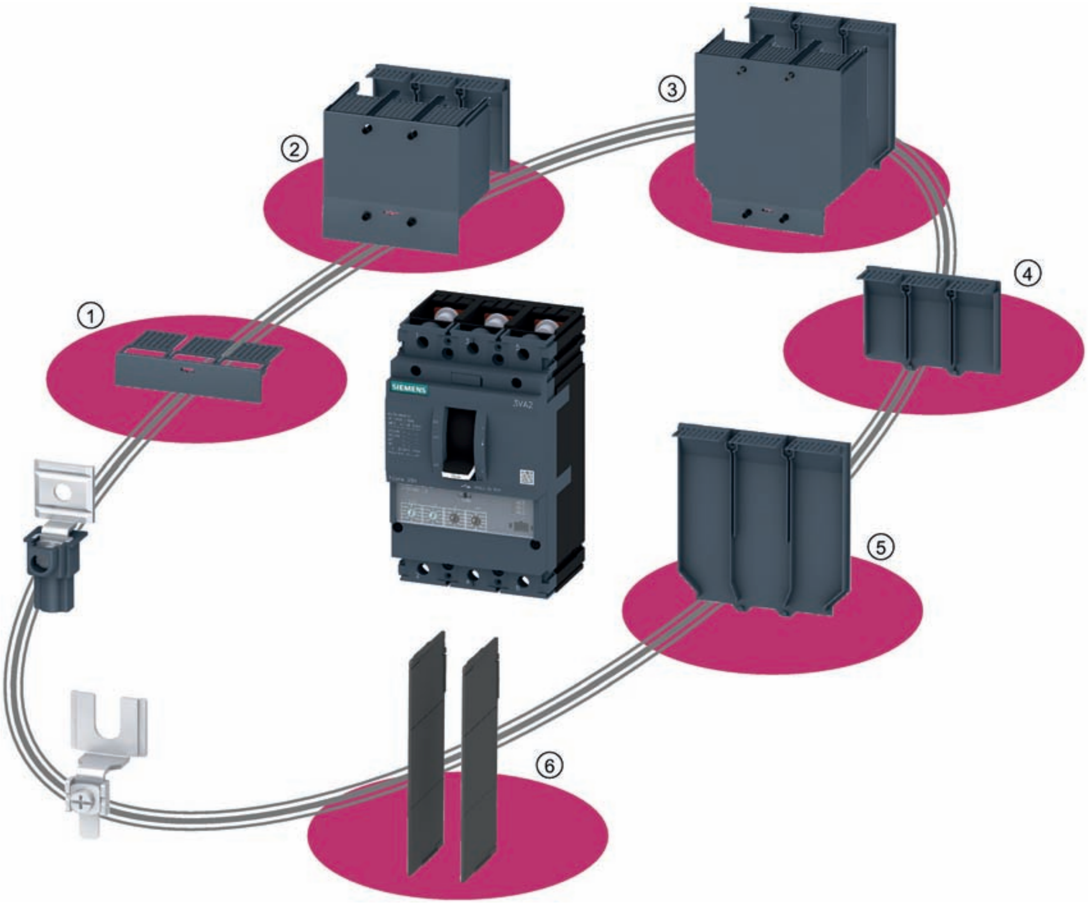

①	Terminal cover
②	Terminal cover extended
③	Terminal cover offset
④	Insulating plate
⑤	Insulating plate offset:
⑥	Phase barriers

Phase barriers

Phase barriers provide insulation between the individual phases of the molded case circuit breaker. They are simply snapped into place on the 3VA molded case circuit breaker.

Phase barriers can be used in combination with the insulating plate and the insulating plate offset. in order to provide additional insulation from the mounting plate.

Phase barriers are compatible with:

- Box terminal
- Wire connector
- Front bus connectors extended (included in scope of supply)
- Front bus connectors offset (included in scope of supply)
- Bus connectors edgewise (included in scope of supply)
- Nut keeper kit, right-angled (included in scope of supply)
- Other insulation accessories: Insulating plate or insulating plate, offset

Depending on the intended purpose of the phase barriers, they must be snapped into position in the direction indicated by the arrows below:

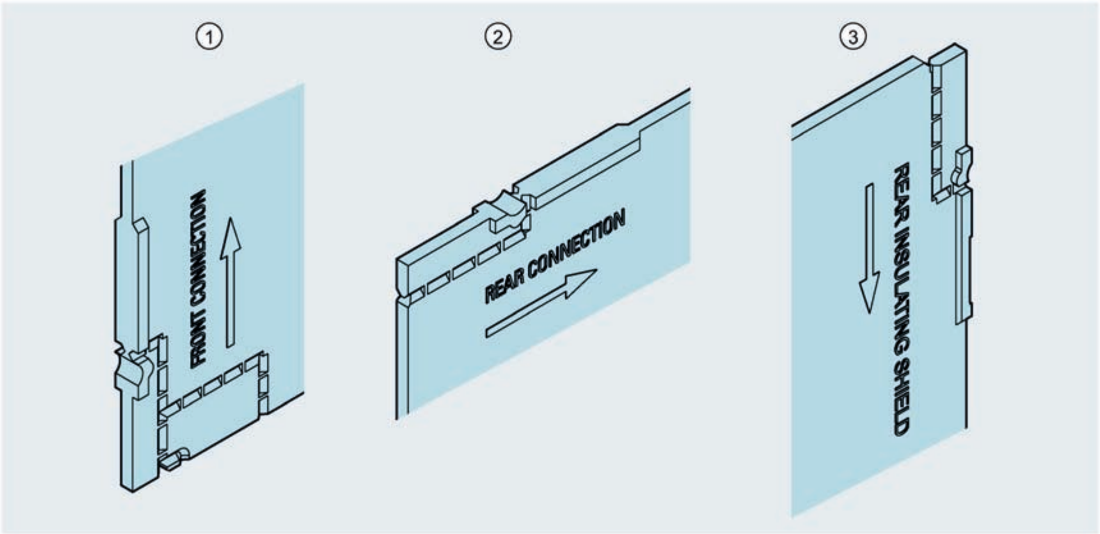

① Front connection
② Rear connection for right-angled nut keeper kit
③ In combination with insulating plate

Terminal cover, extended terminal cover, and offset terminal cover

All terminal covers afford degree of protection IP40 at the front of the breaker and degree of protection IP20 at the infeed and load ends provided that they are correctly installed (cutting of grille structure).

All terminal covers have a marking on the inside face which can be drilled through before the cover is installed. A voltage detector can be inserted through this hole to test for safe isolation.

⚠ **WARNING**

Reduced degree of protection

If a hole is drilled through the terminal cover, degree of protection IP40 is no longer afforded.

Suitable precautions must be taken to safeguard against any hazards posed by this loss of protection.

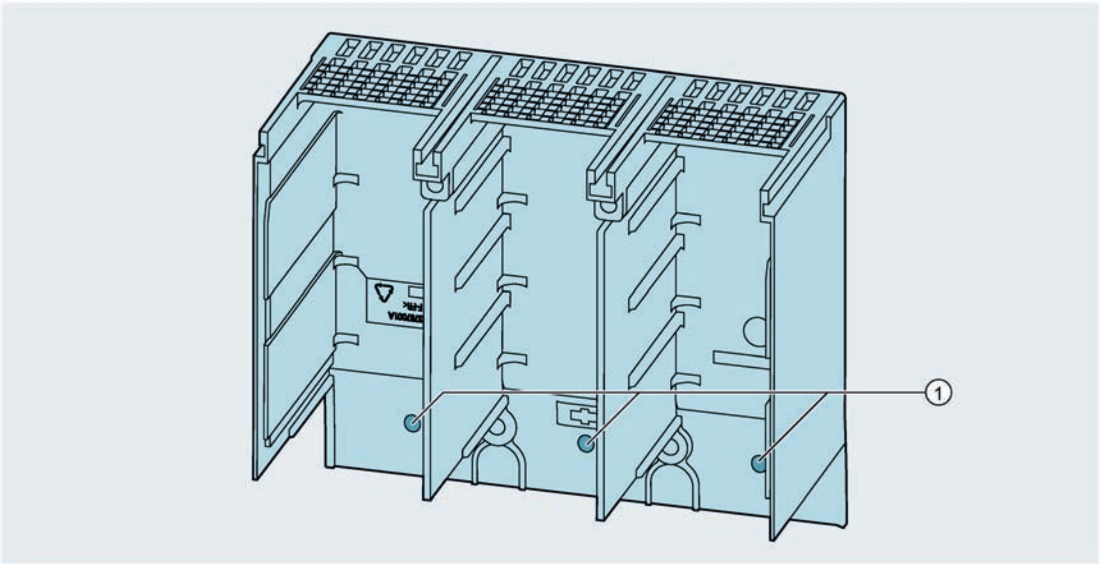

① Marking for holes

Phase barriers can also be installed on all terminal covers in order to maintain the required clearances and creepage distances which might be reduced as a result of ionized gas following a short circuit.

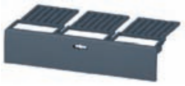

Terminal cover

The terminal cover is compatible with:

- Box terminals
- Wire connectors
- Nut keeper kits

The terminal cover is simply snapped into place on 3VA1 breakers, or is snapped into place and secured with two screws on 3VA2 breakers.

Terminal cover extended

The terminal cover extended always consists of two parts:

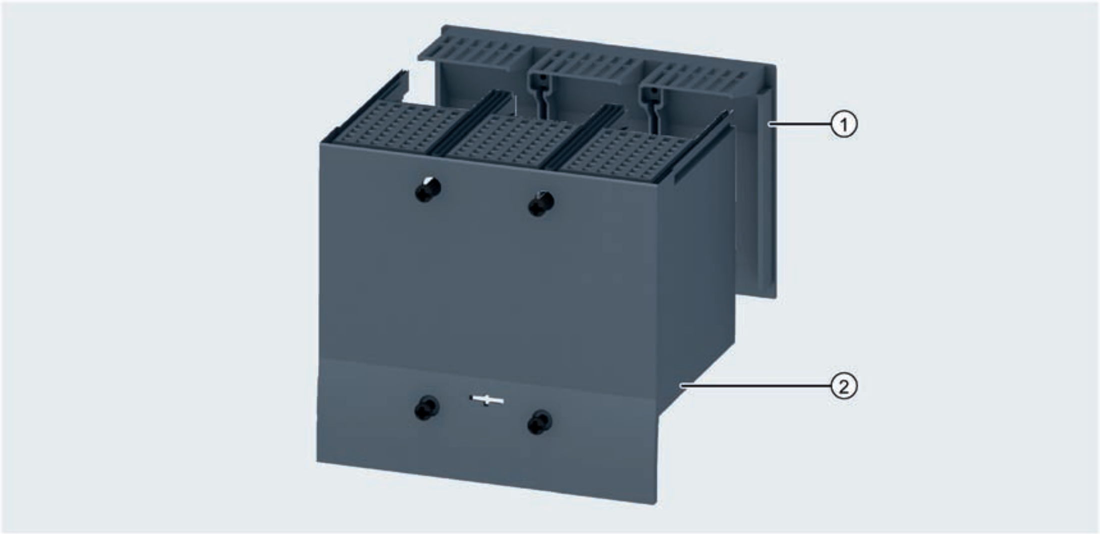

① Rear insulating plate, provides insulation from the panel mounting plate

② Front half, pushed over the molded case circuit breaker from the front

The insulating plate is fitted to the rear panel of the molded case circuit breaker and then secured by two screws to the front half of the terminal cover. The terminal cover extended is also secured by two additional screws to the molded case circuit breaker itself.

The terminal cover extended is compatible with:

- Wire connectors, large (terminal cover extended included in scope of supply)
- Wire connectors, 2 cables (terminal cover extended included in scope of supply)
- Wire connectors, 6 cables (terminal cover extended included in scope of supply)
- Front bus connectors extended
- Bus connectors edgewise

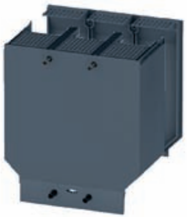

Terminal cover offset

The terminal cover offset always consists of two parts:

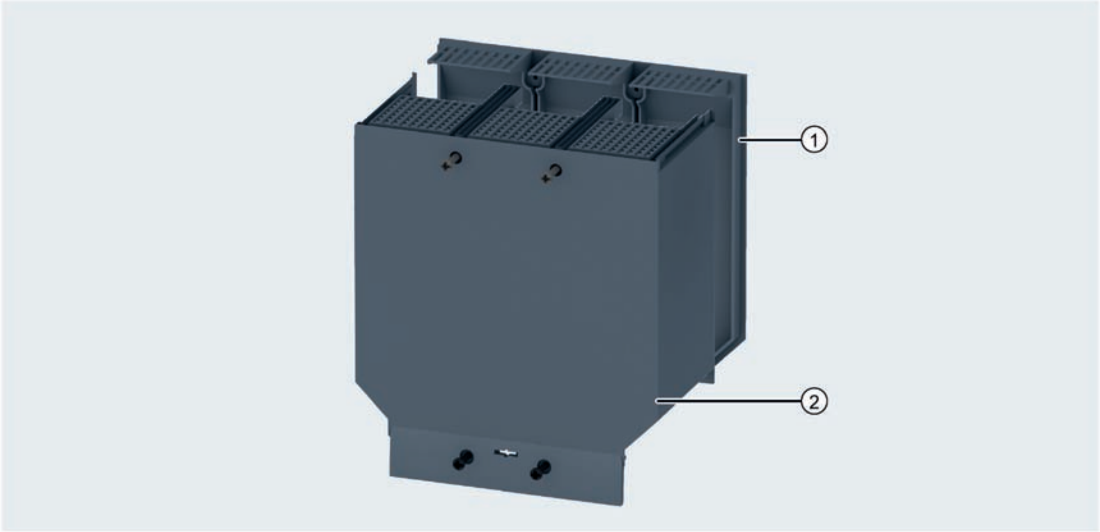

①	Rear insulating plate, provides insulation from the panel mounting plate
②	Front half, pushed over the molded case circuit breaker from the front

The insulating plate is fitted to the rear panel of the molded case circuit breaker and then secured by two screws to the front half of the terminal cover. The terminal cover offset is also secured by two additional screws to the molded case circuit breaker itself.

The terminal cover offset is compatible with:

- Front bus connectors offset

Insulating plate and insulating plate offset

In certain cases it may be necessary to provide insulation from the panel mounting plate, see section "Insulation measures" in chapter Insulating measures (Page 246). The insulating plates for the 3VA molded case circuit breakers are designed for this purpose.

The insulating plate is fitted to the rear panel of the molded case circuit breaker and can be installed in combination with phase barriers.

Potential applications:

- Insulating plate:
  - Bus connectors extended
  - Non-insulated, straight conductors / terminals
- Insulating plate, offset:
  - Bus connectors offset

Side plate for 3VA1 2-pole

CAUTION

Risk of injury

A side plate must be fitted if the side surface at the handle end of a 2-pole 3VA1 breaker with current rating I_n > 100 A is freely accessible.

For further information, please refer to Operating Instructions 3ZW1012-0VA10-2AA0.

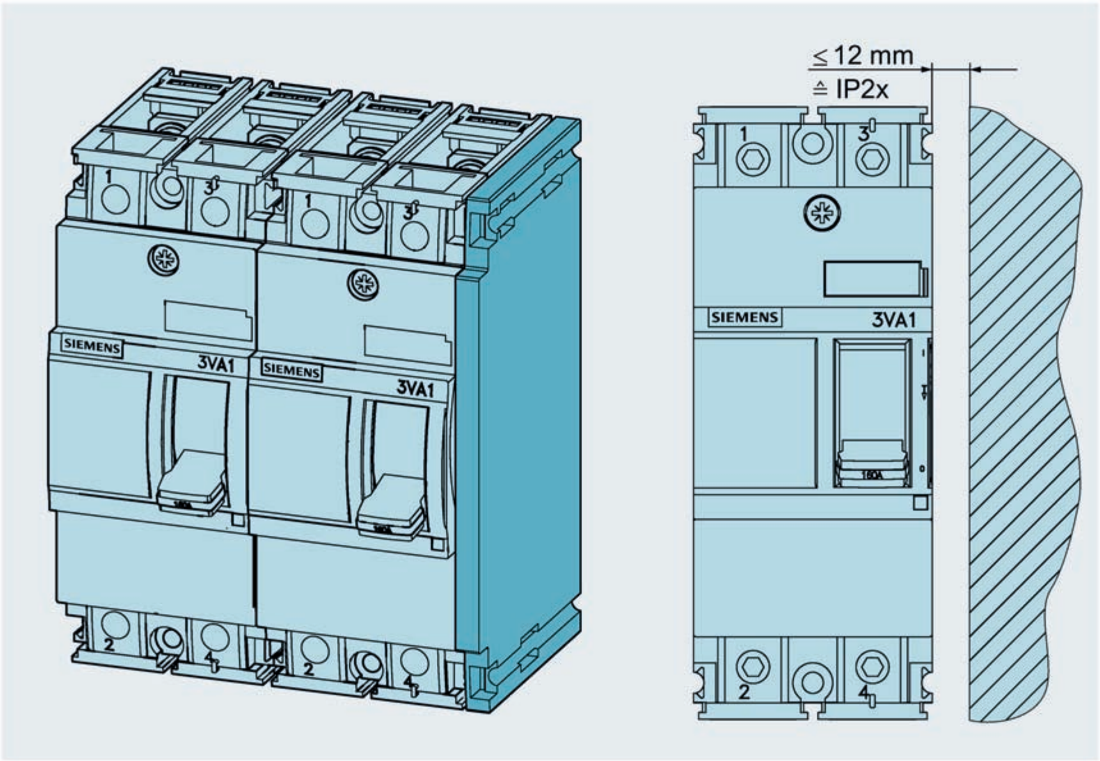

The article number of the side plate is 3VA9112-0SG20.

DC insulating plate

A DC insulating plate must be installed on 3-pole and 4-pole molded case circuit breakers for some applications:

- U_e > 415 V AC: For IT system applications and for entry of incoming feeder cables through the bottom panel of the circuit breaker with non-insulated mounting plate
- U_e > 250 V DC: with non-insulated mounting plate

For further information, please refer to Operating Instructions 3ZW1012-0VA10-0AA0

The article numbers for the DC insulating plates are 3VA9113-0SG10 (3-pole) and 3VA9114-0SG10 (4-pole)

Insulating measures

	Voltage level	Insulated cables and busbars e.g. insulated cable, insulated cable lug, insulated busbar, Flexibar, rear connecting studs, rear terminal flat	Non-insulated cables and busbars e.g. non-insulated cable, non-insulated cable lug, non-insulated busbar, connection bar extensions, external circular conductor terminals
		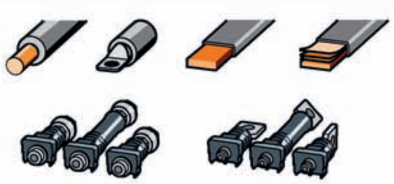	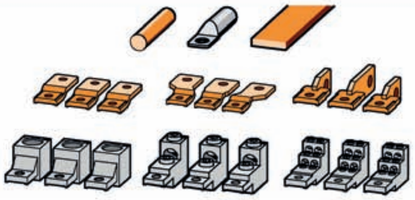
3VA1	≤ 415 V	If the cable or busbar is still insulated at the point at which it enters the terminal compartment, no additional insulating equipment is required.1)	Additional insulating equipment is required such as phase barriers, extended/broadened terminal cover
	> 415 V	Additional insulating equipment is always required: 1. Phase to phase: Phase barriers or extended/broadened terminal covers 2. Phase to mounting plate: Insulating plates or extended/broadened terminal covers	
3VA2	≤ 525 V	If the cable or busbar is still insulated at the point at which it enters the terminal compartment, no additional insulating equipment is required.	Additional insulating equipment is required such as phase barriers, extended/broadened terminal cover
	> 525 V	Additional insulating equipment is always required: 1. Phase to phase: Phase barriers or extended/broadened terminal covers 2. Phase to mounting plate: Insulating plates or extended/broadened terminal covers	

1) The 3VA12 molded case circuit breaker requires a rear insulating plate in the case of infeed from below.

Insulation requirements for inputs/outputs of the molded case circuit breakers

The insulation requirements are represented by letters in the tables below. These letters stand for the following insulation accessories:

Legend for insulation measures of molded case circuit breakers 3VA10 to 3VA24

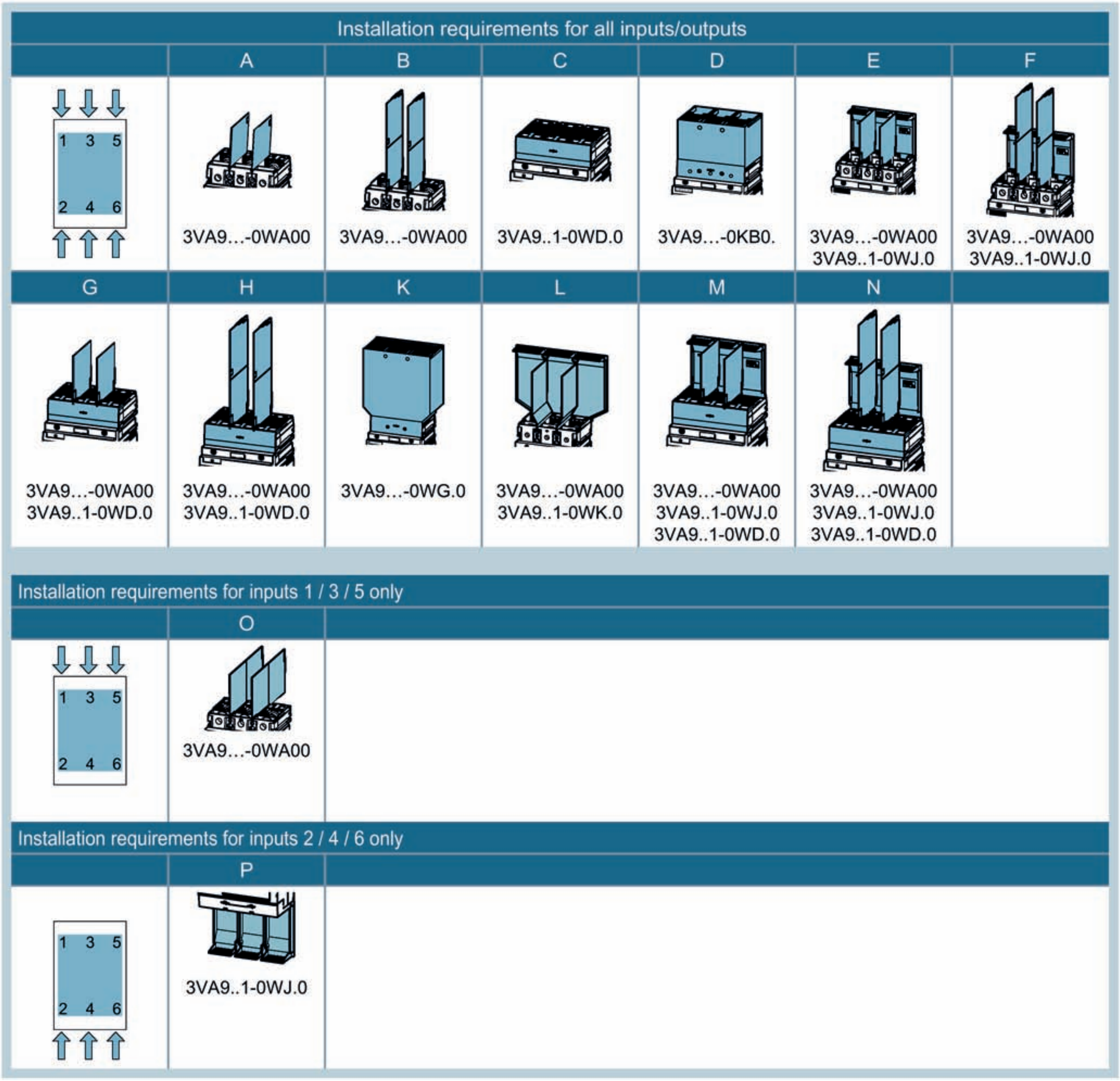

Installation requirements for all inputs/outputs

	A	B	C	D	E	F
1 3 5 2 4 6	3VA9…-0WA00	3VA9…-0WA00	3VA9..1-0WD.0	3VA9…-0KB0.	3VA9…-0WA00 3VA9..1-0WJ.0	3VA9…-0WA00 3VA9..1-0WJ.0
G	**H**	**K**	**L**	**M**	**N**	
3VA9…-0WA00 3VA9..1-0WD.0	3VA9…-0WA00 3VA9..1-0WD.0	3VA9…-0WG.0	3VA9…-0WA00 3VA9..1-0WK.0	3VA9…-0WA00 3VA9..1-0WJ.0 3VA9..1-0WD.0	3VA9…-0WA00 3VA9..1-0WJ.0 3VA9..1-0WD.0	

Installation requirements for inputs 1 / 3 / 5 only

	O
1 3 5 2 4 6	3VA9…-0WA00

Installation requirements for inputs 2 / 4 / 6 only

	P
1 3 5 2 4 6	3VA9..1-0WJ.0

Note

All the insulation measures represent minimum requirements.

Covers can be replaced with higher-quality covers:
- Insulation measure A can be replaced with D and E
- Insulation measure B can be replaced with D and F
- Insulation measure E can be replaced with D
- Insulation measure L can be replaced with K

Insulation measures for 3VA11 molded case circuit breaker, 1-pole

Connection		Article number	3VA11..-.ED1.	
				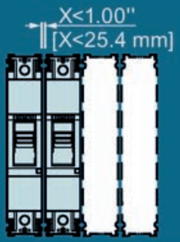
			≤ 415 V AC 125 V DC	
		3VA913.-0JB10 3VA913.-0JG10 3VA913.-0JD10 3VA913.-0JK10	—	—
		3VA913.-0JB11 3VA913.-0JG11 3VA913.-0JD11 3VA913.-0JK11	—	—
		3VA913.-0JA11	—	—
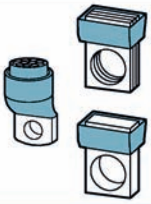		3VA913.-0QA00	—	—
		3VA913.-0QB00	—	⊘
		3VA913.-0QA00	—	⊘
		3VA913.-0QB00	—	⊘

Insulation measures for 3VA10 / 3VA 11 molded case circuit breakers, 2-pole, 3-pole, 4-pole

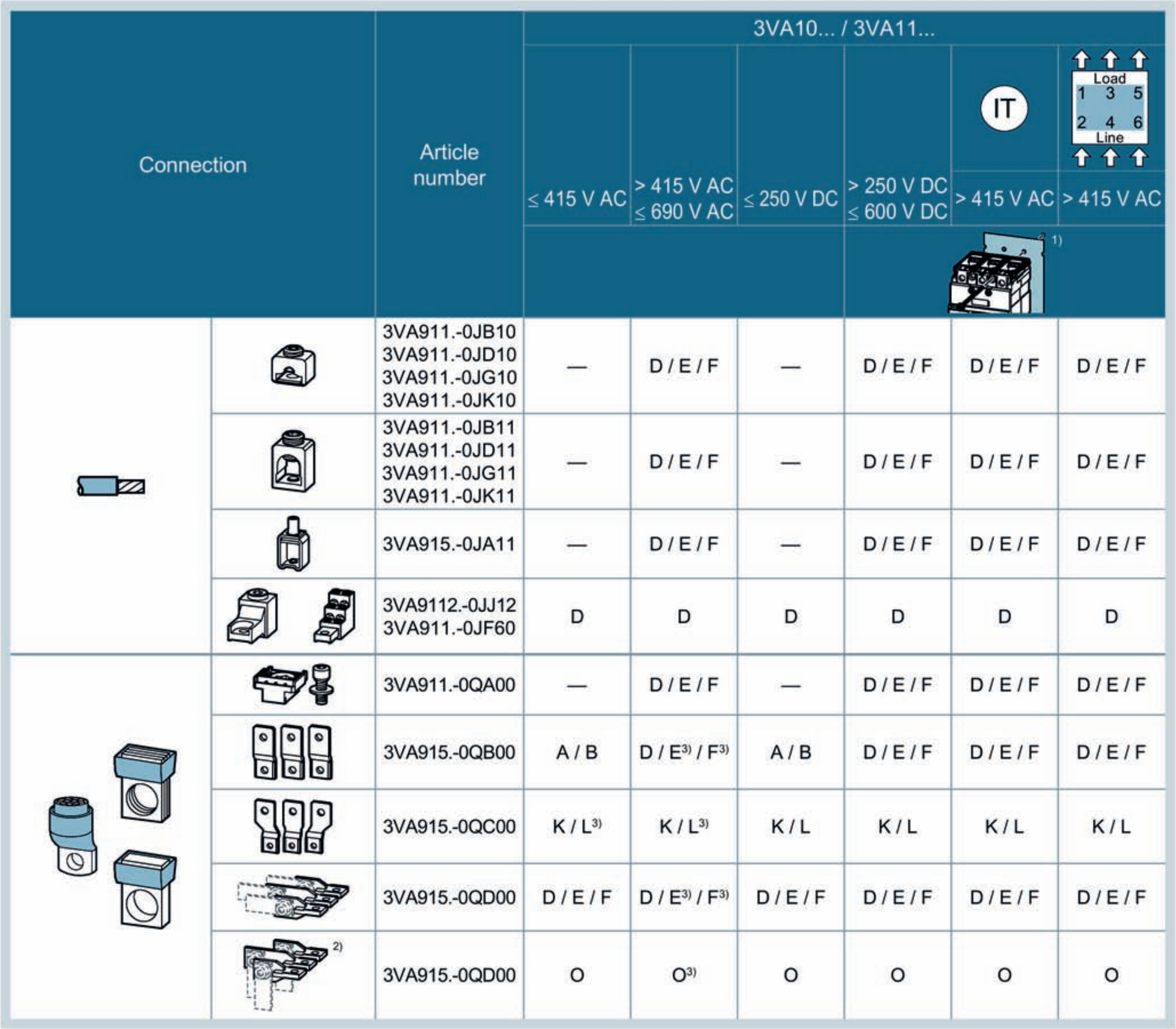

Connection	Article number	3VA10... / 3VA11...					
		≤ 415 V AC	> 415 V AC ≤ 690 V AC	≤ 250 V DC	> 250 V DC ≤ 600 V DC	IT > 415 V AC	Load 1 3 5 / 2 4 6 Line > 415 V AC
					[1]		
	3VA911.-0JB10 3VA911.-0JD10 3VA911.-0JG10 3VA911.-0JK10	—	D / E / F	—	D / E / F	D / E / F	D / E / F
	3VA911.-0JB11 3VA911.-0JD11 3VA911.-0JG11 3VA911.-0JK11	—	D / E / F	—	D / E / F	D / E / F	D / E / F
	3VA915.-0JA11	—	D / E / F	—	D / E / F	D / E / F	D / E / F
	3VA9112.-0JJ12 3VA911.-0JF60	D	D	D	D	D	D
	3VA911.-0QA00	—	D / E / F	—	D / E / F	D / E / F	D / E / F
	3VA915.-0QB00	A / B	D / E[3] / F[3]	A / B	D / E / F	D / E / F	D / E / F
	3VA915.-0QC00	K / L[3]	K / L[3]	K / L	K / L	K / L	K / L
	3VA915.-0QD00	D / E / F	D / E[3] / F[3]	D / E / F	D / E / F	D / E / F	D / E / F
[2]	3VA915.-0QD00	O	O[3]	O	O	O	O

[1] Insulating plate 3VA911.-0SG10 must **always** be used with these systems.

[2] This connection type is only permissible for terminals 1 / 3 / 5.

[3]

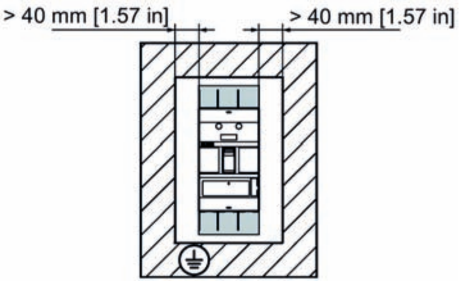

Connection		Article number	3VA10... / 3VA11...					
							IT	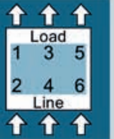
			≤ 415 V AC	> 415 V AC ≤ 690 V AC	≤ 250 V DC	> 250 V DC ≤ 600 V DC	> 415 V AC	> 415 V AC
							 1)	
		3VA911.-0QA00	A / B	D / E3) / F3)	A / B	D / E / F	D / E / F	D / E / F
		3VA915.-0QB00	B	D / F3)	D / F	D / F	D / F	D / F
	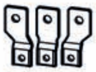	3VA915.-0QC00	K / L3)	K / L3)	K / L	K / L	K / L	K / L
		3VA915.-0QD00	D / F	D / F3)	D / F	D / F	D / F	D / F
	 2)	3VA915.-0QD00	O	O3)	O	O	O	O
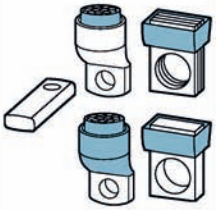	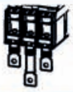	3VA915.-0QE.0	C	M / N	C	⊘	⊘	⊘
		3VA911.-0QF.0	C	M / N	C	⊘	⊘	⊘
	 2)	3VA922.-0QD00	O	⊘	O	⊘	⊘	⊘

1) Insulating plate 3VA911.-0SG10 must **always** be used with these systems.

2) This connection type is only permissible for terminals 1 / 3 / 5.

3)

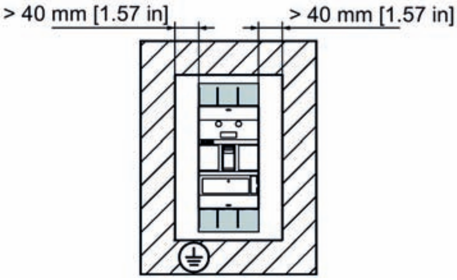

Insulation measures for 3VA12 molded case circuit breaker

Connection		Article number	↓ ↓ ↓ Line 1 3 5 2 4 6 Load ↓ ↓ ↓ ≤ 415 V AC ≤ 415 V DC	↑ ↑ ↑ Load 1 3 5 2 4 6 Line ↑ ↑ ↑ ≤ 415 V AC ≤ 415 V DC	↓ ↓ ↓ Line 1 3 5 2 4 6 Load ↓ ↓ ↓ ≤ 690 V AC ≤ 750 V DC	↑ ↑ ↑ Load 1 3 5 2 4 6 Line ↑ ↑ ↑ ≤ 690 V AC ≤ 750 V DC
		3VA910.-0JB11 3VA926.-0JB12 3VA910.-0JG11 3VA926.-0JG12	—	P	D / E / F	D / E / F
		3VA916.-0JA12 3VA926.-0JA12	—	P	D / E / F	D / E / F
	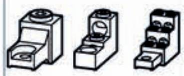	3VA92..-0JJ13 3VA92..-0JC13 3VA92..-0JJ22 3VA92..-0JC22	D	D	D	D
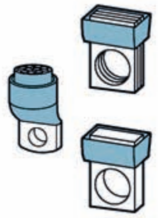		3VA920.-0QA00	—	P	D / E / F	D / E / F
		3VA926.-0QB00	D / E / F	D / E / F	D / E / F	D / E / F
	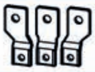	3VA926.-0QB00	K / L	K / L	K / L	K / L
		3VA926.-0QD00	F	F	F	F
	 1)	3VA926.-0QD00	O	O	⊘	⊘
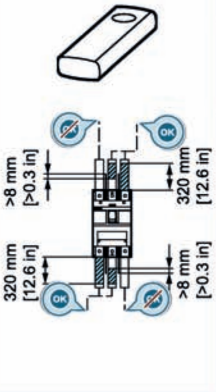		3VA920.-0QA00	A / B	E / F	⊘	⊘
		3VA926.-0QB00	D / E / F	D / E / F	⊘	⊘
		3VA926.-0QC00	K / L	K / L	⊘	⊘
	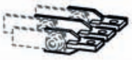	3VA926.-0QD00	F	F	⊘	⊘
	 1)	3VA926.-0QD00	O	⊘	⊘	⊘

---

1) This connection type is only permissible for terminals 1 / 3 / 5.

Connection		Article number	↓↓↓ Line 1 3 5 2 4 6 Load ↓↓↓ ≤ 415 V AC ≤ 415 V DC	↑↑↑ Load 1 3 5 2 4 6 Line ↑↑↑ ≤ 415 V AC ≤ 415 V DC	↓↓↓ Line 1 3 5 2 4 6 Load ↓↓↓ ≤ 690 V AC ≤ 750 V DC	↑↑↑ Load 1 3 5 2 4 6 Line ↑↑↑ ≤ 690 V AC ≤ 750 V DC
		3VA920.-0QA00	A / B	E / F	D / E / F	D / E / F
		3VA926.-0QB00	D / E / F	D / E / F	D / F	D / F
		3VA926.-0QC00	K / L	K / L	K / L	K / L
		3VA926.-0QD00	F	F	F	F
	 1)	3VA926.-0QD00	O	⊘	⊘	⊘
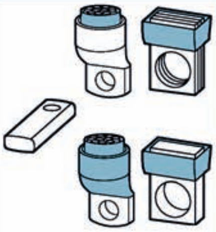	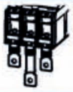	3VA920.-0QE.0	C	C	M / N	M / N
		3VA920.-0QF.0	C	C	M / N	M / N
	 1)	3VA922.-0QD00	O	O	O	O

---

[1] This connection type is only permissible for terminals 1 / 3 / 5.

Insulation measures for 3VA13 and 3VA14 molded case circuit breakers

Connection		Article number	≤ 500 V AC	≤ 690 V AC	≤ 500 V DC	≤ 600 V DC
		3VA938.-0JB13 3VA938.-0JG13	—	D / E / F	D	D
		3VA948.-0JA13	—	D / E / F	D	D
		3VA93..-0JF60 3VA94..-0JJ23 3VA94..-0JC23	D	D	D	D
		3VA940.-0QA00	—	D / E / F	D	D
		3VA928.-0QB00	D / E / F	D / E / F	D	D
	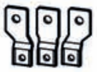	3VA948.-0QC00	K / L	K	K	K
		3VA948.-0QD00	D / F	D / F	D	D
	 1)	3VA948.-0QD00	O	O	O	~~OK~~
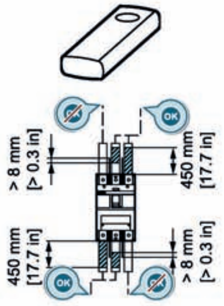		3VA940.-0QA00	A / B	~~OK~~	D	~~OK~~
		3VA948.-0QB00	D / F	~~OK~~	D	~~OK~~
	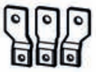	3VA948.-0QC00	K / L	~~OK~~	K	~~OK~~
		3VA948.-0QD00	D / F	~~OK~~	D	~~OK~~
	 1)	3VA948.-0QD00	O	~~OK~~	~~OK~~	~~OK~~

1) These terminals are only permissible for connections 1 / 3 / 5.

Connection		Article number	≤ 500 V AC	≤ 690 V AC	≤ 500 V DC	≤ 600 V DC
		3VA940.-0QA00	A / B	D / E / F	D	D
		3VA948.-0QB00	F	~~OK~~	~~OK~~	~~OK~~
	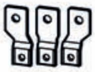	3VA948.-0QC00	K / L	~~OK~~	~~OK~~	~~OK~~
		3VA948.-0QD00	F	F	~~OK~~	~~OK~~
	 1)	3VA948.-0QD00	O	O	~~OK~~	~~OK~~
 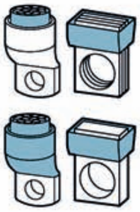	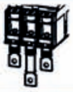	3VA940.-0QE.0	C	M / N	M / N	M / N
		3VA940.-0QF.0	C	M / N	M / N	M / N
	 1)	3VA948.-0QG.0	O	O	~~OK~~	~~OK~~

---

[1] These terminals are only permissible for connections 1 / 3 / 5.

Insulation measures for 3VA20, 3VA21 and 3VA22 molded case circuit breakers

Connection		Article number	≤ 500 V AC	≤ 690 V AC
		3VA910.-0JB11 3VA926.-0JB12 3VA910.-0JG11 3VA926.-0JG12	—	D / E / F
		3VA916.-0JA12 3VA926.-0JA12	—	D / E / F
		3VA92..-0JJ13 3VA92..-0JC13 3VA92..-0JJ22 3VA92..-0JC22 3VA92..-0JF60	D	D
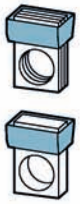		3VA920.-0QA00	—	D / E / F
		3VA926.-0QB00	A / B	D / E / F
	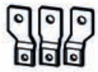	3VA926.-0QC00	B / K	K / L
		3VA926.-0QD00	D / F	D / F
	 [1]	3VA926.-0QD00	O	O
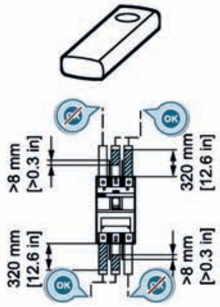		3VA920.-0QA00	A / B	⊘
		3VA926.-0QA00	A / B	⊘
	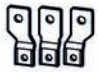	3VA926.-0QC00	B / K / L	⊘
		3VA926.-0QD00	D / F	⊘
	 [1]	3VA926.-0QD00	O	⊘

---

[1] This connection type is only permissible for terminals 1 / 3 / 5.

Connection		Article number	≤ 500 V AC	≤ 690 V AC
		3VA920.-0QA00	—	D / E / F
		3VA926.-0QB00	A / B	D / E / F
		3VA26.-0QC00	K / L	K / L
		3VA926-0QD00	D / F	D / F
	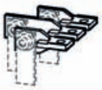 1)	3VA926-0QD00	O	O
		3VA920.-0QA00	A / B	D / E / F
		3VA926.-0QB00	B	D / F
	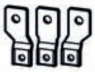	3VA926.-0QC00	K / L	K / L
		3VA926.-0QD00	F	F
	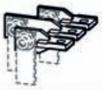 1)	3VA926.-0QD00	O	O
 		3VA920.-0QE.0	C	M / N
		3VA920.-0QF.0	C	M / N
	 1)	3VA922.-0QD00	O	⊘

1) This connection type is only permissible for terminals 1 / 3 / 5.

Insulation measures for 3VA23 and 3VA24 molded case circuit breakers

Connection		Article number	≤ 500 V AC	≤ 690 V AC
		3VA938.-0JB13 3VA938.-0JG13	—	D / E / F
		3VA948.-0JA13	—	D / E / F
		3VA94..-0JJ23 3VA94..-0JC23 3VA93..-0JF60	D	D
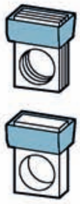		3VA940.-0QA00	—	D / E / F
		3VA948.-0QB00	A / B	D / E / F
		3VA948.-0QC00	B / K	K / L
		3VA948.-0QD00	D / F	D / F
		3VA948.-0QD00	O	O
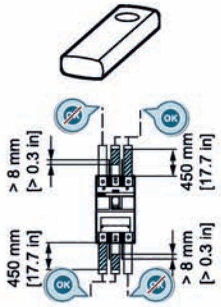		3VA940.-0QA00	A / B	~~OK~~
		3VA948.-0QB00	A / B	~~OK~~
	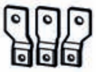	3VA940.-0QC00	B / K / L	~~OK~~
		3VA948.-0QD00	D / F	~~OK~~
		3VA948.-0QD00	O	~~OK~~

---

1) This connection type is only permissible for terminals 1 / 3 / 5.

Connection		Article number	≤ 500 V AC	≤ 690 V AC
		3VA940.-0QA00	—	D / E / F
		3VA948.-0QB00	A / B	D / E / F
		3VA948.-0QC00	K / L	K / L
		3VA948.-0QD00	D / F	D / F
	 1)	3VA948.-0QD00	O	O
		3VA940.-0QA00	A / B	D / E / F
		3VA948.-0QB00	B	D / F
	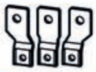	3VA948.-0QC00	K / L	K / L
		3VA948.-0QD00	F	F
	 1)	3VA948.-0QD00	O	O
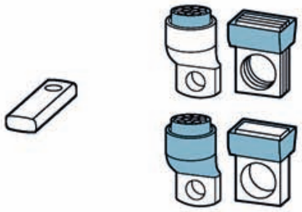		3VA940.-0QE.0	C	M / N
		3VA940.-0QF.0	C	M / N
	 1)	3VA940.-0QG.0	O	O

---

1) This connection type is only permissible for terminals 1 / 3 / 5.

Legend for insulation measures of 3VA25 molded case circuit breaker

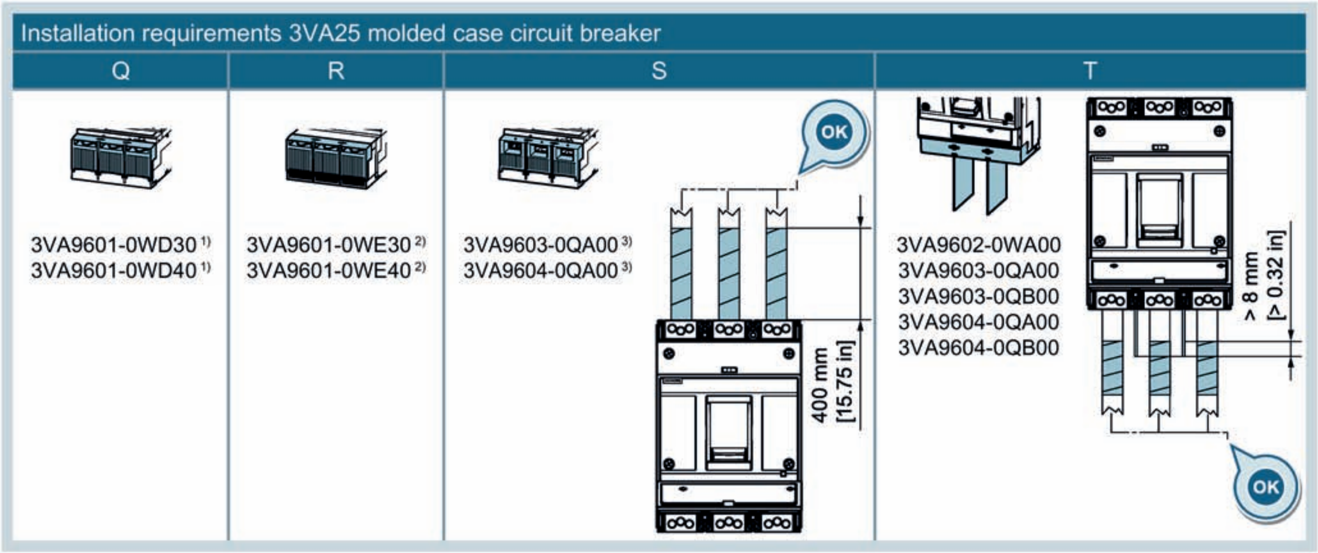

Installation requirements 3VA25 molded case circuit breaker

Q	R	S	T
3VA9601-0WD30 1) 3VA9601-0WD40 1)	3VA9601-0WE30 2) 3VA9601-0WE40 2)	3VA9603-0QA00 3) 3VA9604-0QA00 3)	3VA9602-0WA00 3VA9603-0QA00 3VA9603-0QB00 3VA9604-0QA00 3VA9604-0QB00

1) Spare part, included in the scope of supply of the terminals below:

- 3VA950.-0JB23
- 3VA950.-0JG23
- 3VA950.-0JB32
- 3VA950.-0JG32

2) Spare part, included in the scope of supply of the terminals below:

- 3VA960.-0JJ43
- 3VA960.-0JC43

3) Included in the scope of supply of the circuit breaker

Insulation measures for 3VA25 molded case circuit breaker

Connection		Article number	Position	≤ 690 V AC	≤ 415 V AC	≤ 750 V DC	≤ 1000 V DC
		3VA950.-0JB23 3VA950.-0JG23		Q	Q	n/a	n/a
		3VA950.-0JB32 3VA950.-0JG32		Q	Q	n/a	n/a
		3VA960.-0JJ43 3VA960.-0JC43		On request	On request	On request	On request
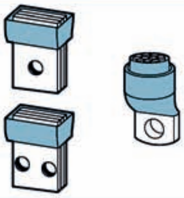		3VA960.-0QA00	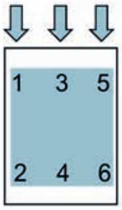	S	S	R 3VA9601-0WE30	R 3VA9601-0WE40
	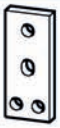	3VA960.-0QB00		S	S	n/a	n/a
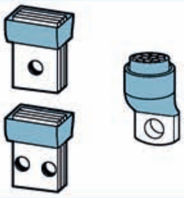		3VA960.-0QA00	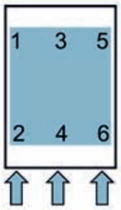	S	S	R	R
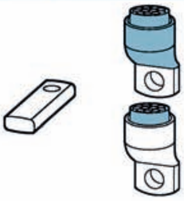	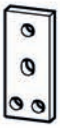	3VA960.-0QB00		T	T	T	T

Touch protection

Insulated cables and busbars

With insulated cables and busbars that have insulation that reaches inside the termination area of the 3VA molded case circuit breaker, the unit is classed as finger-safe (IP2X) if it is also equipped with a terminal cover. This protection is guaranteed only if the unit is installed and wired correctly.

Non-insulated cables and busbars

With non-insulated cables and busbars, and bus connectors extended or bus connectors offset, the unit is classed as finger-safe (IP2X) if it is also equipped with an extended or offset terminal cover. This protection is guaranteed only if the unit is installed and wired correctly.

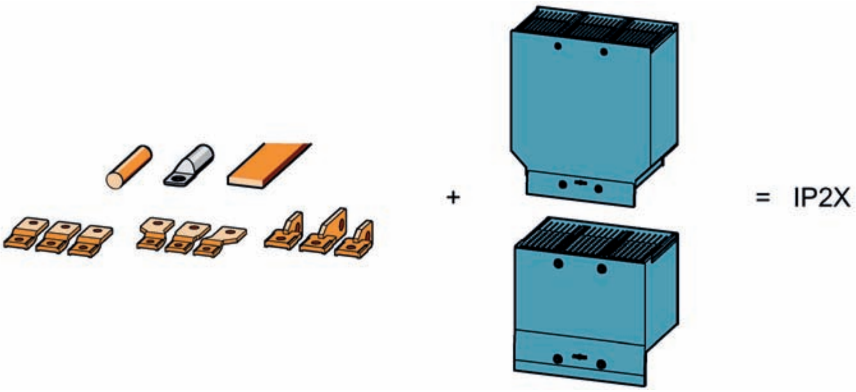

External wire connectors

External wire connectors are supplied as standard with a terminal cover extended. The external wire connectors are classed as finger-safe (IP2X) on condition that the extended terminal cover is correctly installed.

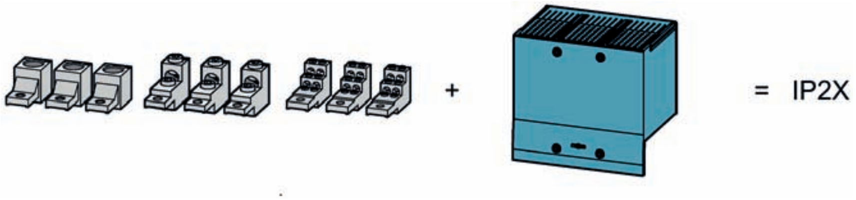

4.3.3.2 Auxiliary conductor terminal

A control wire tap can be implemented easily using components from the 3VA molded case circuit breaker equipment portfolio.

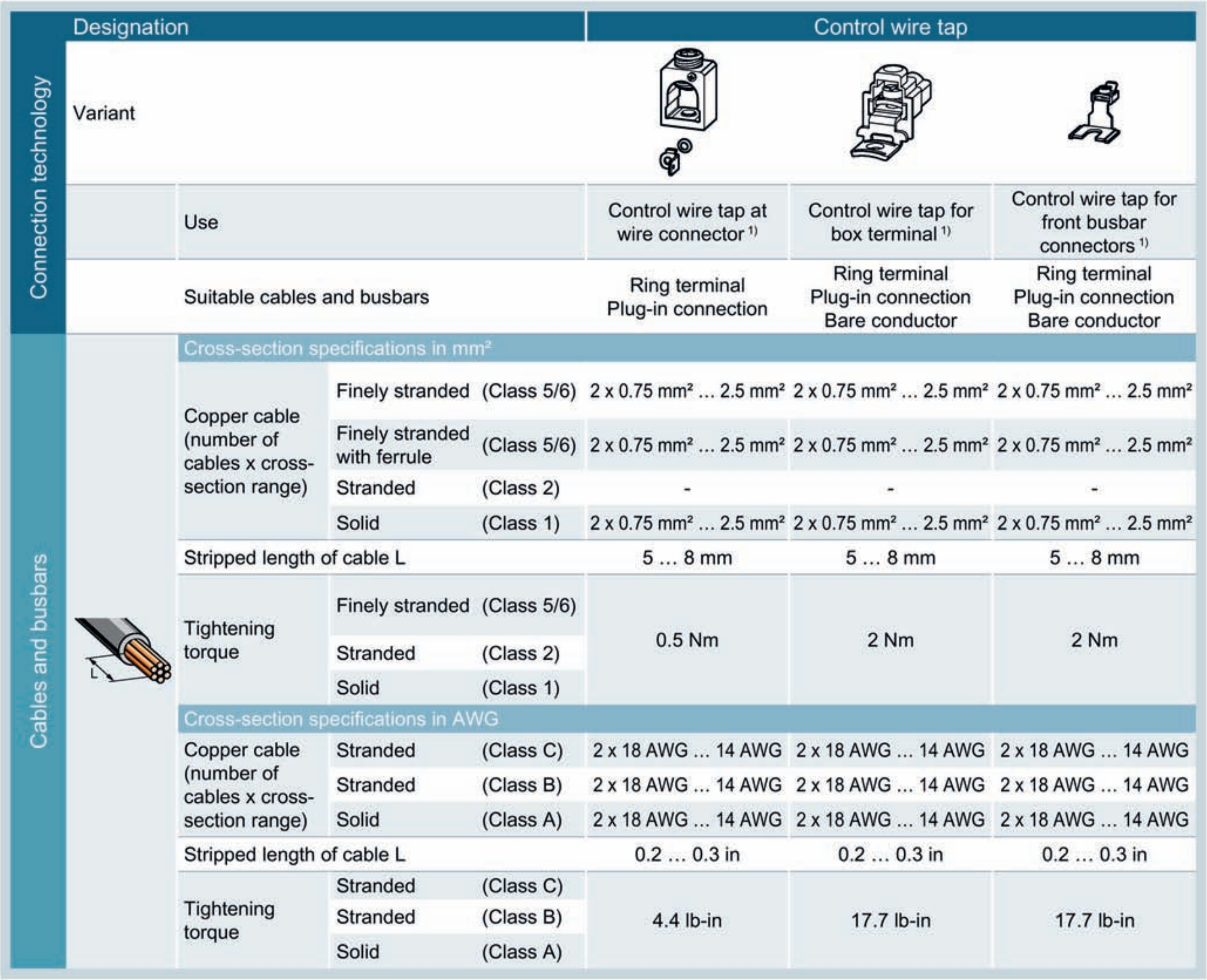

Designation					Control wire tap		
Connection technology	Variant						
		Use			Control wire tap at wire connector 1)	Control wire tap for box terminal 1)	Control wire tap for front busbar connectors 1)
		Suitable cables and busbars			Ring terminal Plug-in connection	Ring terminal Plug-in connection Bare conductor	Ring terminal Plug-in connection Bare conductor
Cables and busbars		Cross-section specifications in mm²					
		Copper cable (number of cables x cross-section range)	Finely stranded	(Class 5/6)	2 x 0.75 mm² ... 2.5 mm²	2 x 0.75 mm² ... 2.5 mm²	2 x 0.75 mm² ... 2.5 mm²
			Finely stranded with ferrule	(Class 5/6)	2 x 0.75 mm² ... 2.5 mm²	2 x 0.75 mm² ... 2.5 mm²	2 x 0.75 mm² ... 2.5 mm²
			Stranded	(Class 2)	-	-	-
			Solid	(Class 1)	2 x 0.75 mm² ... 2.5 mm²	2 x 0.75 mm² ... 2.5 mm²	2 x 0.75 mm² ... 2.5 mm²
		Stripped length of cable L			5 ... 8 mm	5 ... 8 mm	5 ... 8 mm
		Tightening torque	Finely stranded	(Class 5/6)	0.5 Nm	2 Nm	2 Nm
			Stranded	(Class 2)			
			Solid	(Class 1)			
		Cross-section specifications in AWG					
		Copper cable (number of cables x cross-section range)	Stranded	(Class C)	2 x 18 AWG ... 14 AWG	2 x 18 AWG ... 14 AWG	2 x 18 AWG ... 14 AWG
			Stranded	(Class B)	2 x 18 AWG ... 14 AWG	2 x 18 AWG ... 14 AWG	2 x 18 AWG ... 14 AWG
			Solid	(Class A)	2 x 18 AWG ... 14 AWG	2 x 18 AWG ... 14 AWG	2 x 18 AWG ... 14 AWG
		Stripped length of cable L			0.2 ... 0.3 in	0.2 ... 0.3 in	0.2 ... 0.3 in
		Tightening torque	Stranded	(Class C)	4.4 lb-in	17.7 lb-in	17.7 lb-in
			Stranded	(Class B)			
			Solid	(Class A)			

1) Maximum current carrying capacity 15 A

Note

A maximum current limit of 15 A applies to all control wire taps for 3VA molded case circuit breakers and must not be exceeded.
The control wire tap must be taken into account when configuring the molded case circuit breaker. Suitable cable cross-sections: Cables up to a maximum of 2.5 mm^2 can be connected.

All wire connectors can be ordered with control wire tap under a separate article number. The wire connector is then supplied with a hole for the control wire tap. A ring terminal can be installed in this hole. The screw required is supplied.

Control wire tap for box terminal

This control wire tap is inserted in the box terminal with the cable.

The following connections can be selected for the control wire tap:

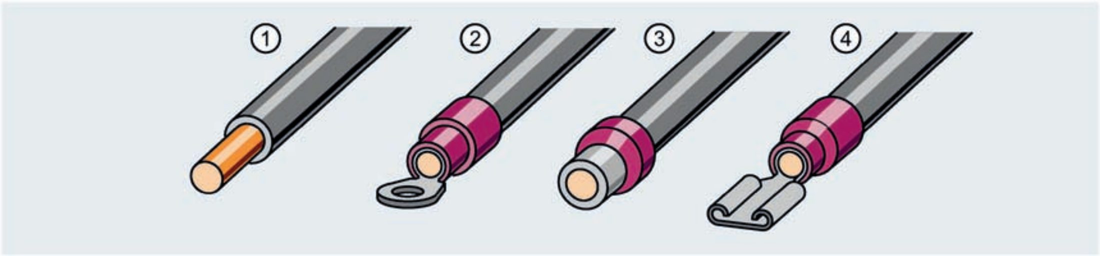

① Bare conductor

② Ring terminal

③ Wire-end ferrule

④ Cable lug (connector)

Control wire tap for busbar connector

This control wire tap is installed at the 3VA molded case circuit breaker with the busbar.

It can also be installed using:

- Front bus connectors extended
- Front bus connectors offset
- Bus connectors edgewise
- Nut keeper kits, right-angled

The following connections can be selected for the control wire tap:

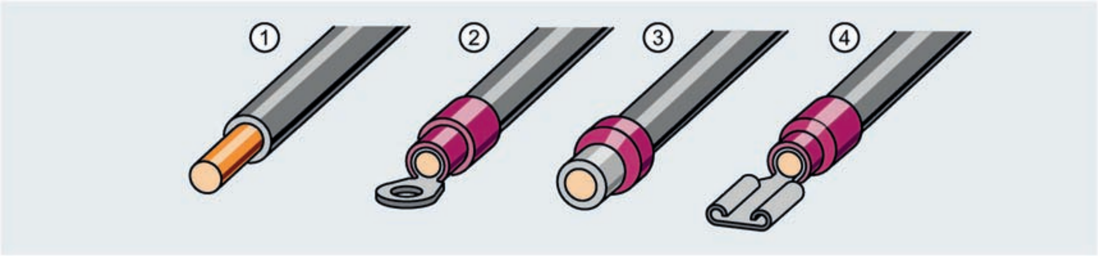

① Bare conductor
② Ring terminal
③ Wire-end ferrule
④ Cable lug (connector)

4.4 Plug-in and draw-out technology

4.4.1 Introduction

With most applications, 3VA molded case circuit breakers are installed in a fixed position in switchboards or distribution boards. The breaker is normally secured by mounting screws directly to the mounting plate or other suitable supporting stays of the panel. The cables or busbars of the main circuits are connected directly to the 3VA molded case circuit breaker by various terminals or connectors. A rigid, permanent connection is thus created between the 3VA molded case circuit breaker and the panel.

For certain applications, e.g. cyclic inspections or service, it must be possible to replace the 3VA molded case circuit breakers quickly. To meet this requirement, 3VA molded case circuit breakers can be converted to plug-in and draw-out units.

The main differences between plug-in units and draw-out units are convenience of operation and the potential for functional expansion.

Plug-in technology

Plug-in technology is the less expensive and more space-saving of the two solutions. The 3VA molded case circuit breaker is inserted in the appropriate plug-in socket and fitted with plug-in contacts which make a keyed, friction-locked connection with the corresponding mating contacts (tulip-type contacts) in the plug-in socket. In this case, the device is plugged in and withdrawn manually.

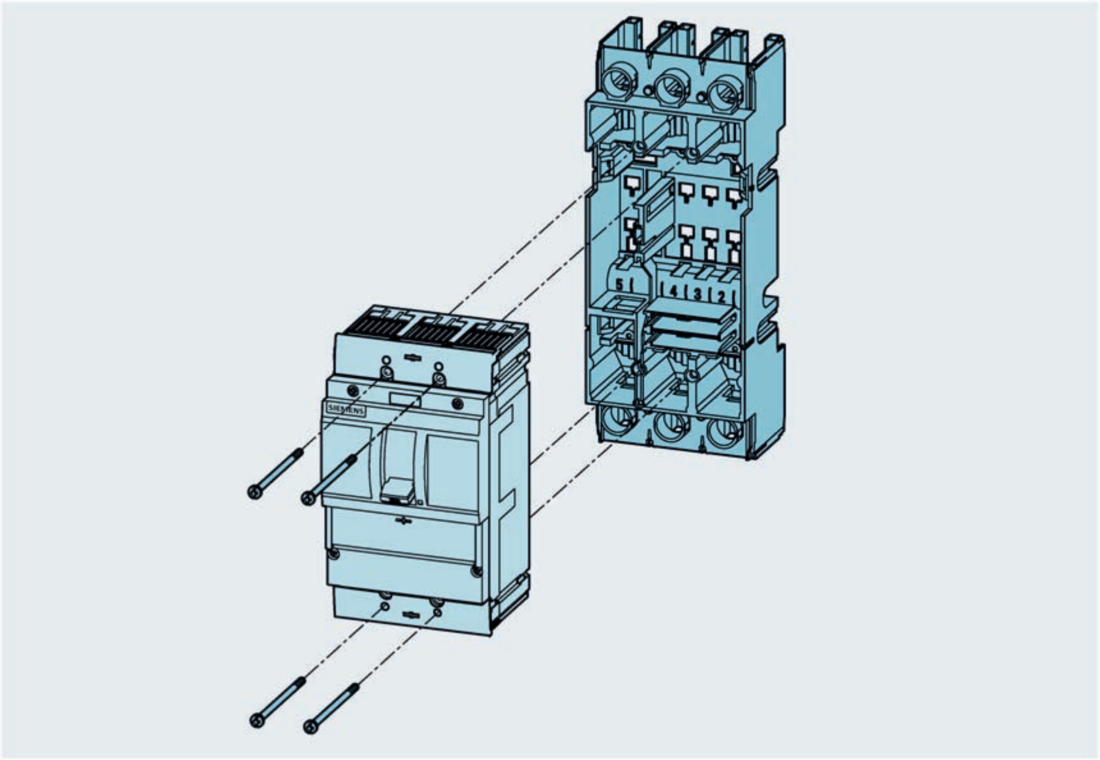

Draw-out technology

Like the plug-in versions, draw-out versions of 3VA molded case circuit breakers are equipped with plug-in contacts at the main current paths. In addition, side walls including guide and support bolts are bolted to the sides of the 3VA molded case circuit breakers.

In this case, the mating contacts are in the draw-out socket. This is also equipped with a guide mechanism via which the molded case circuit breaker is moved into the draw-out socket by means of a crank handle in order to connect the breaker to the main circuits. The operator can clearly read from a position indicator whether the breaker is properly connected to the main circuits or is 100% safely isolated from them (so that it can be withdrawn).

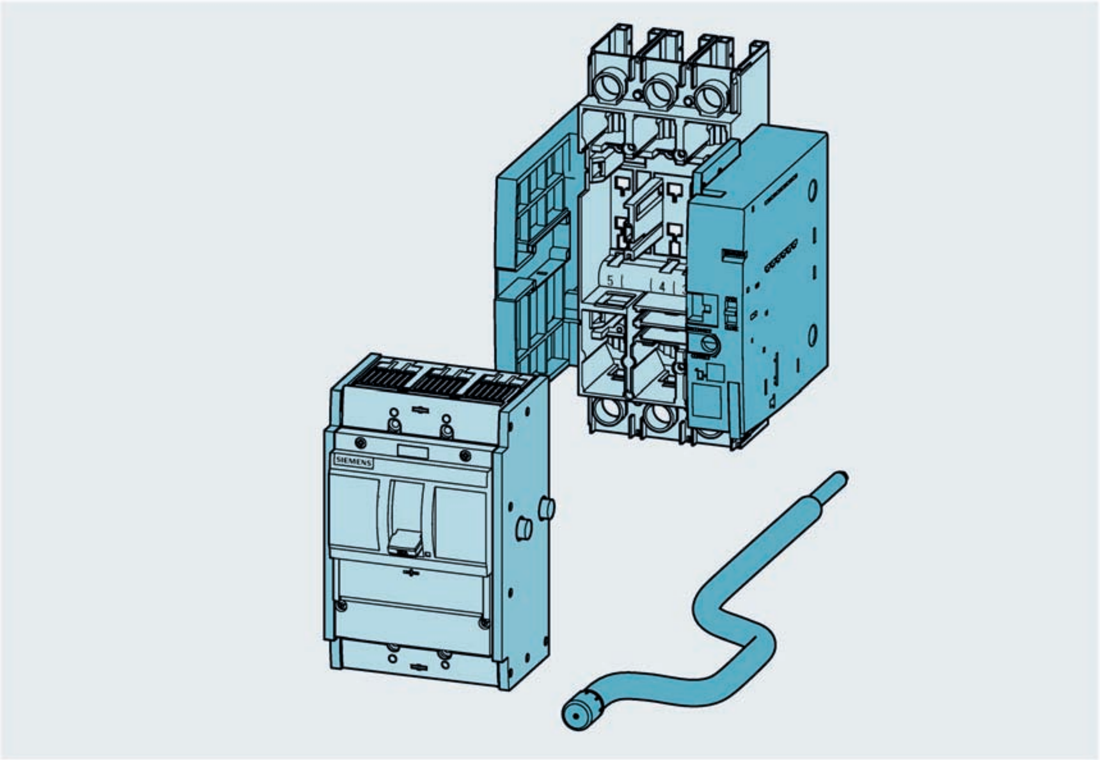

Cable connection

With plug-in and draw-out circuit breakers, the cables or busbars are connected to the plug-in socket or the draw-out socket. Here, the termination areas are implemented in the same way as for the molded case circuit breaker. That is, all the connection technology available for the 3VA molded case circuit breaker is also available in a similar way for the plug-in and draw-out sockets.

3VA plug-in and draw-out units

Plug-in and draw-out technology as it is implemented in 3VA molded case circuit breakers is described below. But 3VA switch disconnectors in MCCB design can also be converted to plug-in or draw-out technology. The information given below therefore applies analogously to 3VA switch disconnectors.

⚠ WARNING

Formation of arcs between contacts and irreparable damage to circuit breakers and installation

When the 3VA molded case circuit breaker is moved into or out of the socket when the main contacts are closed (breaker position ON), arcs can form between contacts and result in irreparable damage to the circuit breaker or the electrical installation, and possibly cause physical injury to personnel.

Do not move the 3VA molded case circuit breaker into or out of the plug-in socket or the socket of the draw-out unit unless the main contacts are open, i.e. unless the breaker is in the OFF position.

Before moving the molded case circuit breaker into or out of the socket, use the handle to switch it to the OFF position. In order to prevent operating errors, 3VA molded case circuit breakers are equipped with an autotrip plunger when they are converted to plug-in or draw-out units. This plunger automatically trips the circuit breaker (breaker position TRIP) and thus opens the main contacts whenever an attempt is made to move a unit into or out of the socket when the breaker contacts are closed.

4.4.2 Overview of variants / products

Installation overview

3-pole and 4-pole 3VA molded case circuit breakers are available in a version for fixed mounting, as a plug-in version and a draw-out version, as shown in the table below:

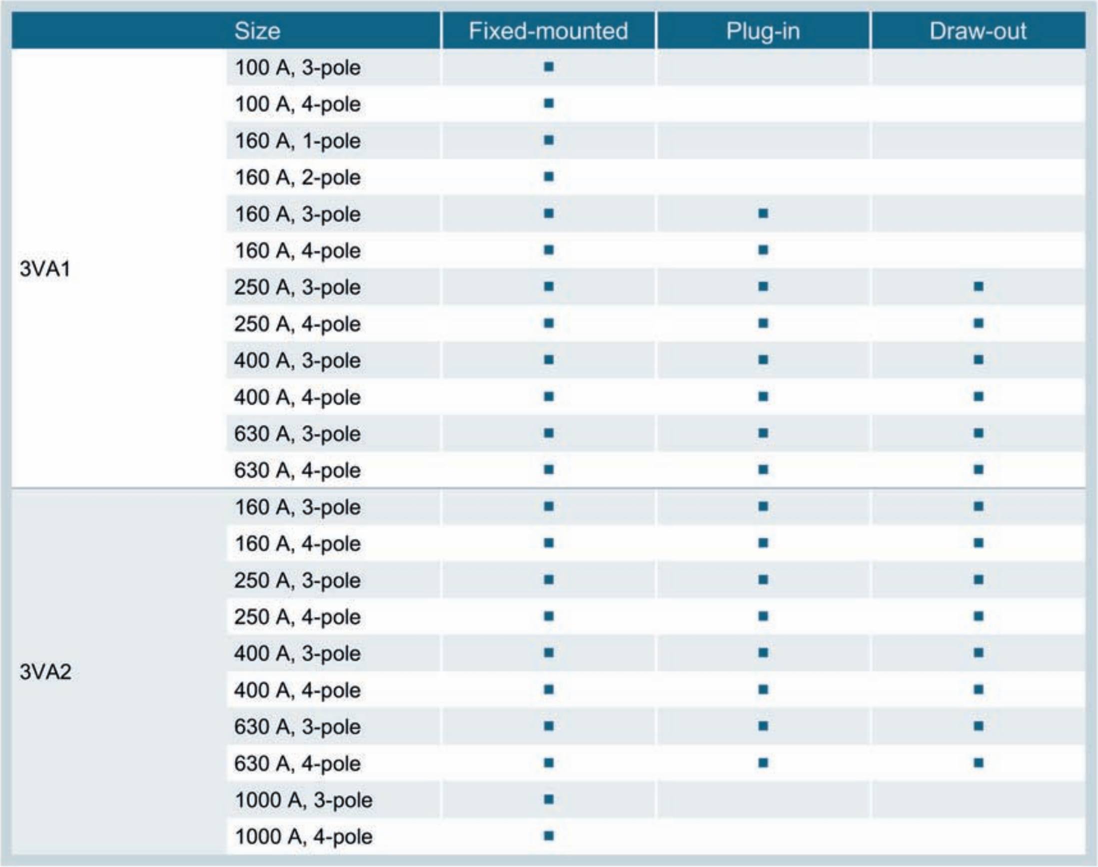

	Size	Fixed-mounted	Plug-in	Draw-out
3VA1	100 A, 3-pole	■		
	100 A, 4-pole	■		
	160 A, 1-pole	■		
	160 A, 2-pole	■		
	160 A, 3-pole	■	■	
	160 A, 4-pole	■	■	
	250 A, 3-pole	■	■	■
	250 A, 4-pole	■	■	■
	400 A, 3-pole	■	■	■
	400 A, 4-pole	■	■	■
	630 A, 3-pole	■	■	■
	630 A, 4-pole	■	■	■
3VA2	160 A, 3-pole	■	■	■
	160 A, 4-pole	■	■	■
	250 A, 3-pole	■	■	■
	250 A, 4-pole	■	■	■
	400 A, 3-pole	■	■	■
	400 A, 4-pole	■	■	■
	630 A, 3-pole	■	■	■
	630 A, 4-pole	■	■	■
	1000 A, 3-pole	■		
	1000 A, 4-pole	■		

Apart from the complete kit for plug-in or draw-out technology, a plug-in or draw-out "conversion kit" for the 3VA molded case circuit breaker can be ordered as a separate item. These conversion kits are used to prepare 3VA molded case circuit breakers in advance so that ready-assembled units are available at short notice in the event that a defective breaker needs to be replaced.

4.4.3 General information

With plug-in and draw-out circuit breakers, the cables or busbars are connected to the plug-in socket or the draw-out socket. The same socket unit is used for the same sizes of both variants.

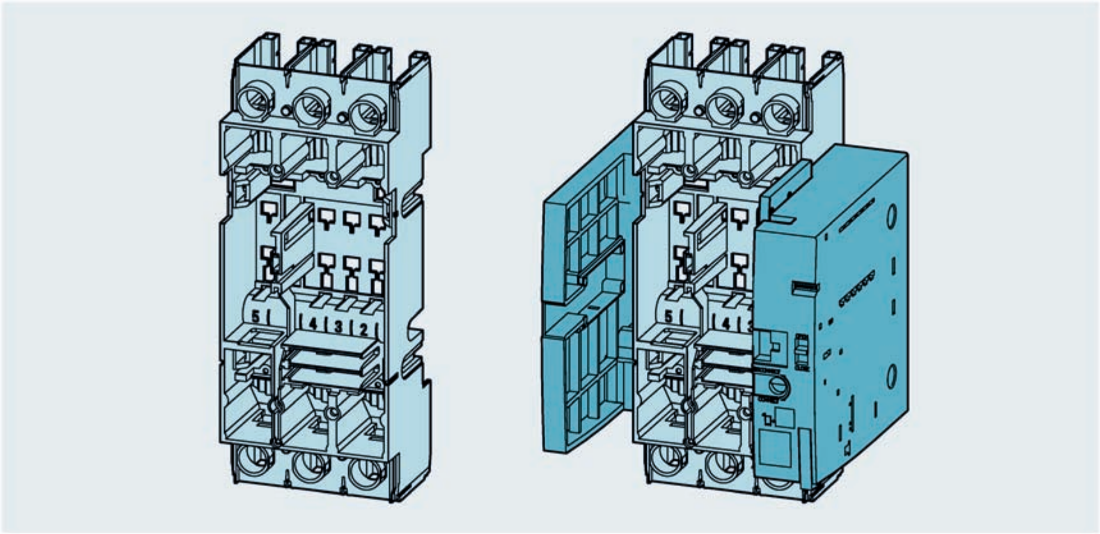

The incoming and outgoing feeder ends of the socket unit termination area is designed to match the relevant 3VA molded case circuit breaker. The major benefit of this design feature is that all terminal and connection variants of the 3VA molded case circuit breaker are fully compatible with the corresponding plug-in or draw-out unit. To facilitate the ordering process, the components used in combination with plug-in and draw-out units have been given separate article numbers. Furthermore, an optional terminal cover for the molded case circuit breaker can also be installed as a terminal cover over the plug-in socket or draw-out socket.

The connection systems available for a 3VA rated current version and the sizes of cable or busbar cross section which are compatible with various connection types are described in detail in chapter Connection system (Page 211).

4.4.4 Information about installation, built-on and built-in components

Securing plug-in and draw-out units to the mounting plate

Bolts supplied with complete kit

Supplied with each complete kit for plug-in or draw-out technology:

- 4 fastening bolts, metric thread, Phillips pan head

The fastening bolts are used to attach the relevant socket unit to a mounting plate or supporting stay. Sets of fastening bolts can also be ordered separately as spare parts. Fastening bolts with an inch thread are also available.

Mounting positions

The permissible mounting positions are described in Chapter Permissible mounting positions and mounting positions with accessories (Page 60).

See also

Connection system (Page 211)

4.4.5 Plug-in technology

4.4.5.1 Product description

Applications

The plug-in versions of 3VA molded case circuit breakers are designed for use in complex applications for which speedy replacement of molded case circuit breakers is a basic requirement. Plug-in technology can be used, for example, when clear visual evidence of safe electrical isolation of circuits is essential, e.g. when overhaul work is in progress.

Description

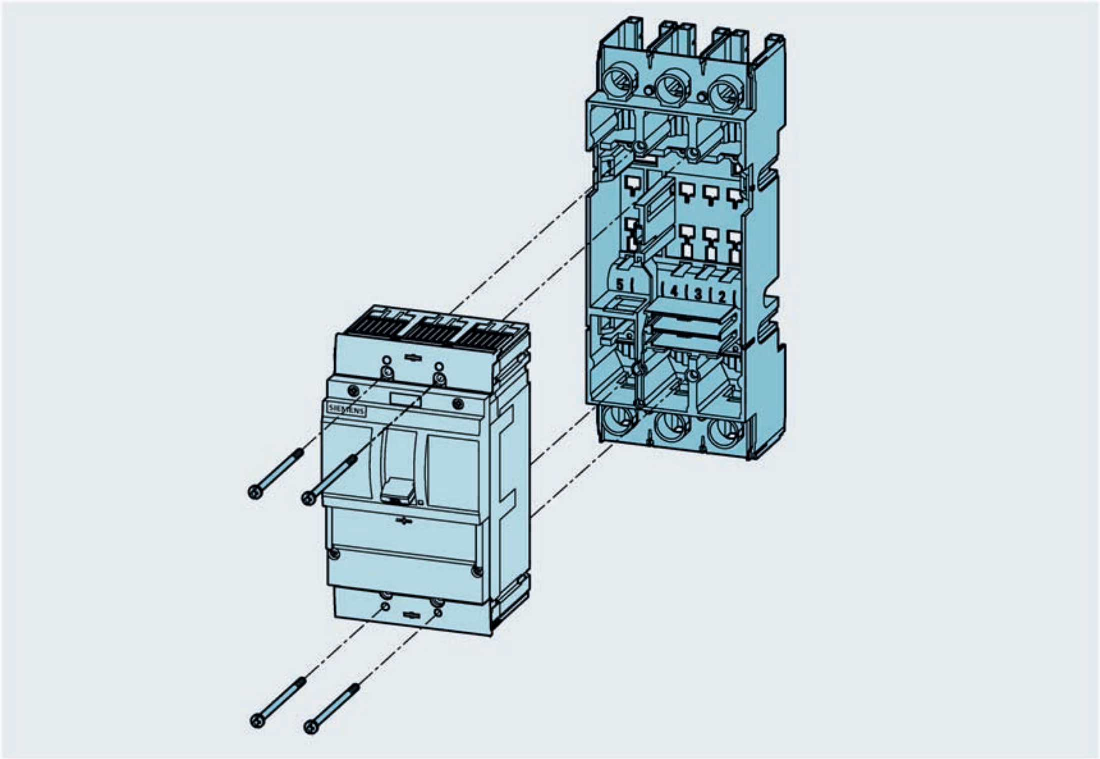

With a plug-in system, the molded case circuit breaker is moved into and out of the plug-in socket manually.

WARNING

Risk of large magnetic forces in the event of short circuits

Accident hazard posed by short circuit events. The molded case circuit breaker can be ejected from its socket by the resulting magnetic forces.

The 3VA molded case circuit breaker must be bolted securely in position in the socket. The complete kit for plug-in technology contains assembly bolts for this purpose.

A complete kit for plug-in technology contains all the components required to convert the fixed mounting version of a 3VA molded case circuit breaker or 3VA switch disconnector to a plug-in version.

A complete kit for plug-in technology contains:

- Plug-in socket
- 4 mounting screws for installing the socket in the panel
- Mounting screws for fixing the molded case circuit breaker in the plug-in socket
  - 3-pole version:
    2 mounting screws from the scope of supply of the plug-in unit and
    2 mounting screws from the scope of supply of the molded case circuit breaker
  - 4-pole version:
    No additional mounting screws in the scope of supply of the plug-in unit
    4 mounting screws from the scope of supply of the molded case circuit breaker
- Plug-in contacts for attachment to the main terminals of the molded case circuit breaker
  - 3-pole: 6 plug-in contacts
  - 4-pole: 8 plug-in contacts
- Autotrip plunger, labeled "Plug-in"
- 2 screw-mounted terminal covers for the molded case circuit breaker
- Cable cages (see chapter Cable cage (Page 306))

A conversion kit for plug-in technology contains:

- Plug-in contacts for attachment to the main terminals of the molded case circuit breaker
  - 3-pole: 6 plug-in contacts
  - 4-pole: 8 plug-in contacts
- Autotrip plunger, labeled "Plug-in"
- 2 screw-mounted terminal covers for the molded case circuit breaker
- Cable cages (see chapter Cable cage (Page 306))

Scope of supply of the 3VA molded case circuit breaker and the 3VA switch disconnector in molded case circuit breaker design:

- For 3-pole version up to 250 A: 2 assembly bolts
- For 3-pole version up to 630 A: 4 assembly bolts
- For 4-pole version up to 630 A: 4 assembly bolts

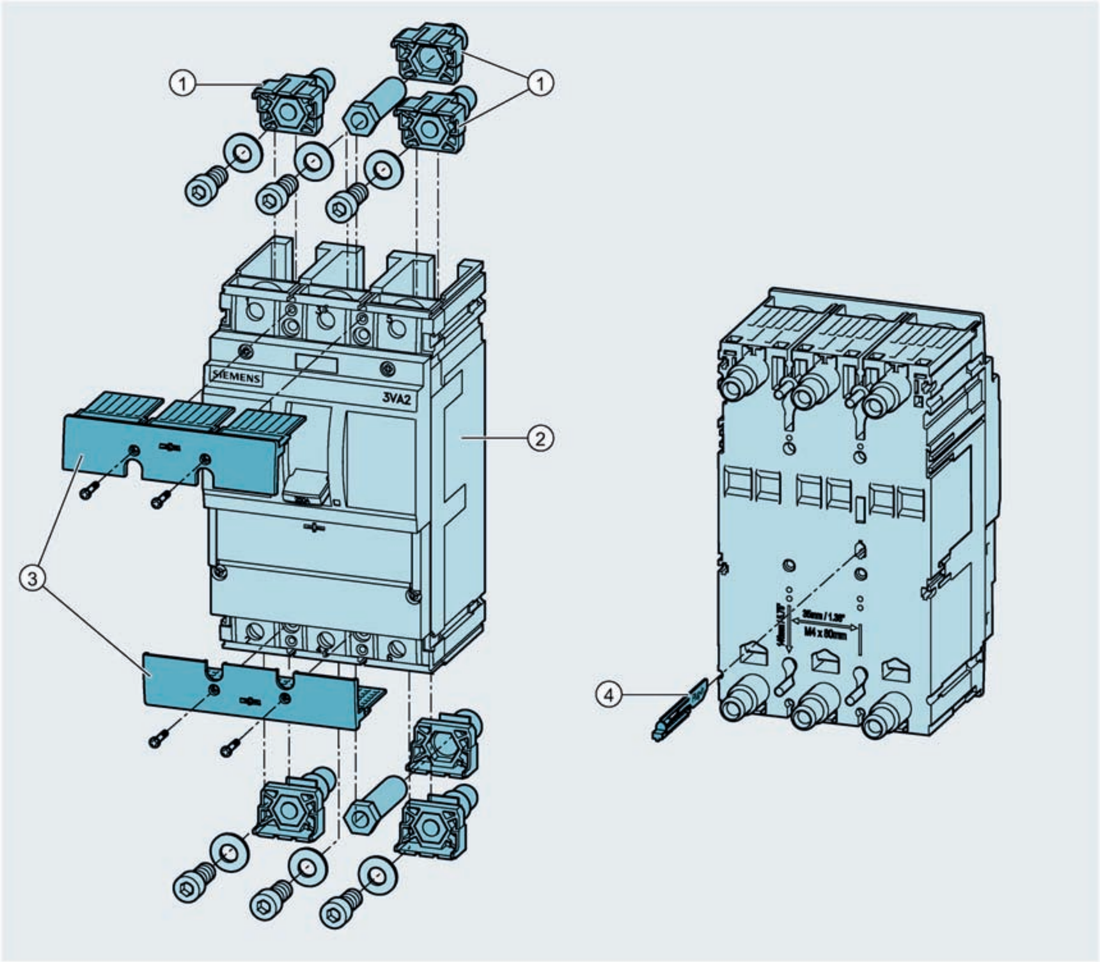

①	Plug-in contacts for attachment to the main terminals of the 3VA molded case circuit breaker
②	3VA molded case circuit breaker
③	Screw-mounted terminal cover for the molded case circuit breaker
④	Autotrip plunger

Terminal covers

As described above, two screw-mounted terminal covers are included in the plug-in socket complete kit and the plug-in socket conversion kit. These feature molded grips to ease withdrawal of the molded case circuit breaker from its socket. Since it requires significant force to remove a molded case circuit breaker from its socket, the plug-in terminal covers are bolted to the contact unit.

If the termination area of the plug-in socket needs to be protected by terminal covers, a variety of models of terminal cover are available to order as options for this purpose.

Autotrip plunger

An autotrip plunger is supplied as standard with every complete kit and every conversion kit for converting a 3VA molded case circuit breaker to plug-in technology. The plunger performs safety functions in operation.

When a 3VA molded case circuit breaker is converted to a 3VA plug-in unit, this plunger is installed from the rear of the device and latched. The plunger performs safety functions in operation. It prevents the molded case circuit breaker from being switched to the ON position if the breaker is not correctly bolted to the socket. For further information, see also section "Signal 'Plug-in unit - MCCB correctly bolted to plug-in socket'" in chapter Position signaling switches (Page 295).

WARNING

Make sure that the autotrip plunger is correctly installed

The molded case circuit breaker cannot be safely moved into or out of the socket without an autotrip plunger. Insertion and removal in switched-on state (circuit breaker position ON) can lead to formation of arcs between contacts and can result in irreparable damage to the breaker and electrical installation as well as physical injuries.

Once installed, the autotrip plunger cannot be dismantled again!

Note the color coding and labels for the autotrip plunger:

- Plug-in technology: Black, labeled "Plug-in"
- Draw-out technology: Grey, labeled "Draw-out"

Auxiliary circuit connectors

Molded case circuit breakers or switch disconnectors in molded case circuit breaker design are frequently equipped with internal accessories, e.g. with an auxiliary switch and auxiliary release. A broad range of internal accessory components is also available for the 3VA molded case circuit breaker. For further information, please refer to chapter Internal accessories (Page 191).

To ensure that the electrical connections required by plug-in units can be quickly and safely disconnected, auxiliary circuit connectors can be installed.

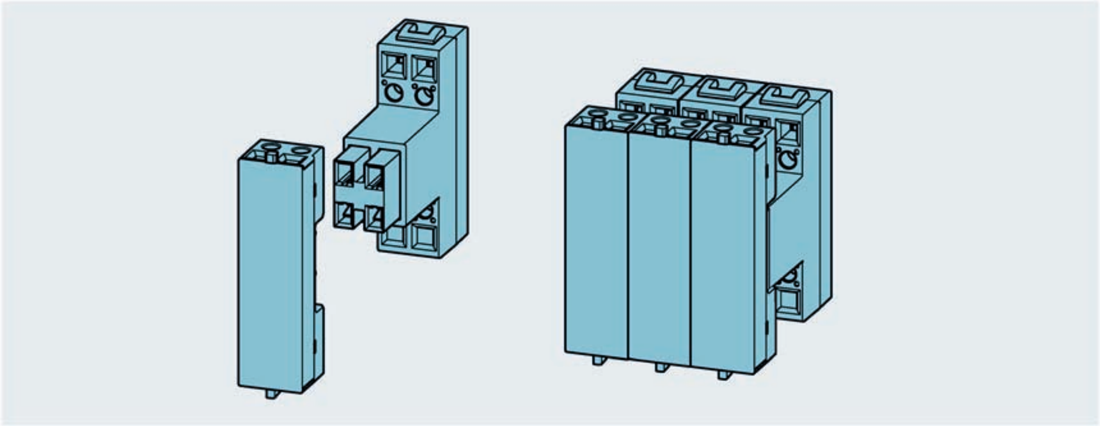

The part of the auxiliary circuit connectors on the circuit breaker side is mounted on the underside of the molded case circuit breaker using the cable cages and is electrically connected to the internal accessories. Appropriate openings and cable ducts are provided in the molded case circuit breaker for routing stranded wires. The plug-in socket half of the auxiliary circuit connector is inserted in the socket and electrically connected to the customer's installation.

When the molded case circuit breaker is inserted into the plug-in socket, the internal accessories in the breaker are quickly connected to the customer's installation without the use of tools.

Note

Plug-in and draw-out units use different versions of the auxiliary circuit connector. The draw-out version has a longer, movable telescopic rail because the distance to be bridged in the draw-out socket is longer.

Further details about auxiliary circuit connectors can be found in chapter Auxiliary circuit connector (Page 301).

Position signaling in the plug-in socket

Several position signaling switches (number depends on socket size) can be fitted in the plug-in socket. Auxiliary switches are capable of signaling "Plug-in unit - MCCB correctly bolted to plug-in socket" via electrical connections.

For further information, please refer to chapter Position signaling switches (Page 295).

Padlocks for preventing insertion of a molded case circuit breaker

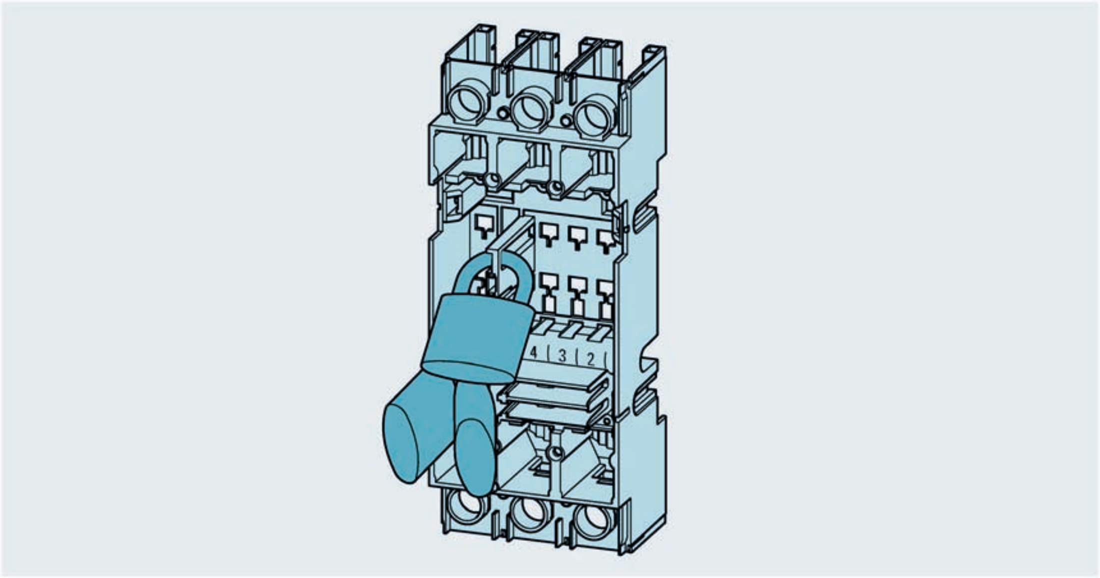

The socket unit can be locked with padlocks to prevent unauthorized insertion of a molded case circuit breaker during service calls and inspections. Using these locks to prevent insertion and operation of a molded case circuit breaker helps to protect personnel and the installation itself. The socket unit of the plug-in socket is equipped with three openings for padlocks.

Openings for padlocks:

- Up to three padlocks
- Shackle diameter 6 mm to 8 mm / 0.25" to 0.31"

Benefits of plug-in technology

- Defective molded case circuit breakers can be replaced quickly and easily
- Clear visual evidence of safe electrical isolation of main circuits
- Remote signaling of molded case circuit breaker positions:
  - "INSERTED": The 3VA molded case circuit breaker is properly inserted and bolted to the socket
  - "WITHDRAWN": The bolts have been removed and the 3VA molded case circuit breaker removed
- Plug-in socket can be locked by padlocks to prevent insertion of a molded case circuit breaker
- Degree of protection IP20 at all termination points
- No grounding required

See also

Locking and interlocking (Page 360)

4.4.5.2 Combination with other accessories

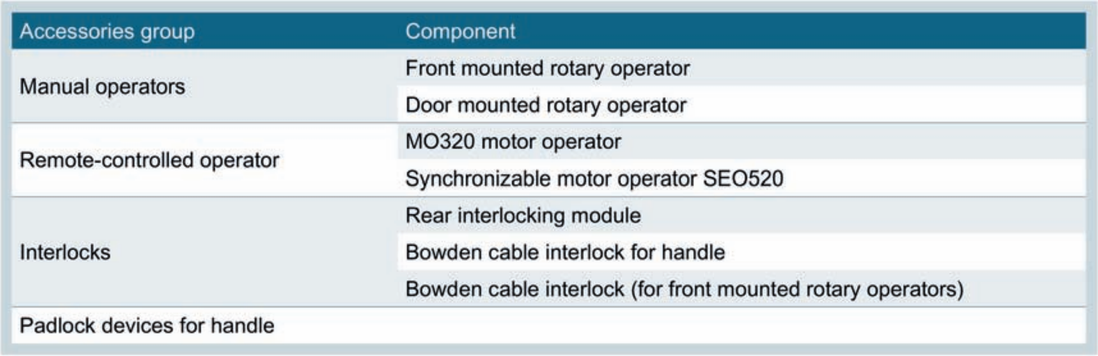

Accessories group	Component
Manual operators	Front mounted rotary operator
	Door mounted rotary operator
Remote-controlled operator	MO320 motor operator
	Synchronizable motor operator SEO520
Interlocks	Rear interlocking module
	Bowden cable interlock for handle
	Bowden cable interlock (for front mounted rotary operators)
Padlock devices for handle	

4.4.6 Draw-out technology

4.4.6.1 Product description

Typical applications for draw-out versions of 3VA molded case circuit breakers are installations in which inspections and overhauls need to be carried out at regular intervals and, for reasons of safety, clear visual evidence of safe electrical isolation of plant sections must be provided at short notice so that work can commence. Draw-out versions of 3VA molded case circuit breakers are also suitable for applications which require that molded case circuit breakers or switch disconnectors can be replaced very rapidly when necessary.

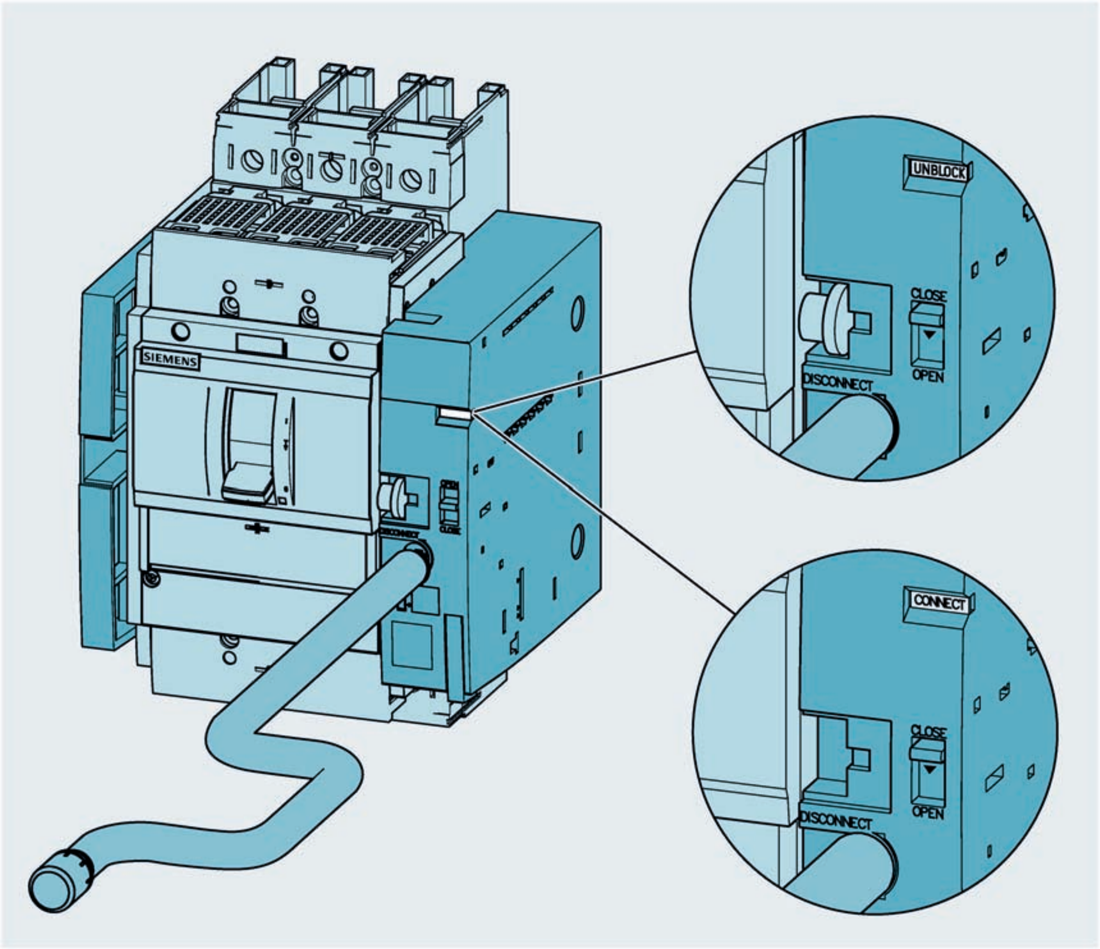

In the draw-out version, the 3VA molded case circuit breaker is supported by the side walls of the draw-out unit and can be moved into three defined positions by rotation of a crank handle. The current breaker position is indicated by the breaker status indicator.

Defined positions

- CONNECT position: The molded case circuit breaker is connected to the main circuits. The auxiliary circuits are also electrically connected to the installation via the auxiliary circuit connectors.
  This is the normal operating position of the molded case circuit breaker.
- TEST position: The main circuits are not connected to the installation. The auxiliary circuits are connected to the installation via auxiliary circuit connectors.
  The auxiliary circuits can be function-tested with the breaker in the TEST position even when the installation itself is not live.
- DISCON position: Neither the main circuits nor the auxiliary circuits are connected to the installation.
  The molded case circuit breaker is electrically isolated.

If the molded case circuit breaker is not in any of these defined positions, the breaker status indicator displays the word UNBLOCK on a white background. When the breaker is in this position, its main contacts cannot be closed if the autotrip plunger is correctly installed (see below).

Move the molded case circuit breaker into a defined position

NOTICE

Gear damage

The following operations will lead to irreparable damage of the draw-out socket gear:

- Molded case circuit breaker is in DISCONNECT position:
  Insertion of the crank handle (position indicator changes to UNBLOCK) and counterclockwise turning of the crank handle toward DISCONNECT.
- Molded case circuit breaker is in CONNECT position:
  Insertion of the crank handle (position indicator changes to UNBLOCK) and clockwise turning of the crank handle toward CONNECT.

In the situations described above, pay attention not to turn the crank handle in the indicated direction.

Note

If the breaker status indication is CONNECT, TEST or DISCON, the sliding clutch of the crank gear is engaged and rotation of the crank handle has no effect.

By removing and reinserting the crank handle, it is possible to disengage the gear. The breaker status indicator will then show UNBLOCK. The molded case circuit breaker can now be moved to a new position.

1. If the crank handle is inserted in the crankcase, pull it out.
2. Insert the crank handle into the crankcase again.
   By removing and reinserting the crank handle, it is possible to disengage the gear.
3. Turn the crank handle until the breaker status indication shows the required position.

Remove the molded case circuit breaker

NOTICE

Gear damage

The following operations will lead to irreparable damage of the draw-out socket gear:

- Molded case circuit breaker is in DISCONNECT position:
  Insertion of the crank handle (position indicator changes to UNBLOCK) and counterclockwise turning of the crank handle toward DISCONNECT.
- Molded case circuit breaker is in CONNECT position:
  Insertion of the crank handle (position indicator changes to UNBLOCK) and clockwise turning of the crank handle toward CONNECT.

In the situations described above, pay attention not to turn the crank handle in the indicated direction.

1. Move the molded case circuit breaker into the DISCON position.
   The molded case circuit breaker is electrically isolated.
2. To disengage the lock, press the safety lock slide underneath the breaker status indication downwards as indicated by the arrow.
3. Remove the molded case circuit breaker.

Components of a complete kit for draw-out technology

A complete kit for draw-out technology contains all the components required to convert the fixed mounting version of a molded case circuit breaker or switch disconnector to a draw-out version.

- Draw-out socket including side walls with the mechanical components required to guide the molded case circuit breaker into and out of the socket under the control of a crank handle
- 4 mounting screws for installing the socket in the panel
- Plug-in contacts for attachment to the main terminals of the molded case circuit breaker
  - 3-pole: 6 plug-in contacts
  - 4-pole: 8 connectors
- Side walls with guide bolts for mounting on the molded case circuit breaker
- Autotrip plunger, labeled "Draw-out"
- 2 screw-mounted terminal covers for the molded case circuit breaker
- Cable cage (see chapter Cable cage (Page 306))

Note

Information about the crank handle

The crank handle is not supplied as part of the complete kit and must be ordered separately.

Components of a conversion kit for draw-out technology

- Plug-in contacts for attachment to the main terminals of the molded case circuit breaker
  - 3-pole: 6 plug-in contacts
  - 4-pole: 8 plug-in contacts
- Side walls with guide bolts for mounting on the molded case circuit breaker
- Autotrip plunger, labeled "Draw-out"
- 2 screw-mounted terminal covers for the molded case circuit breaker

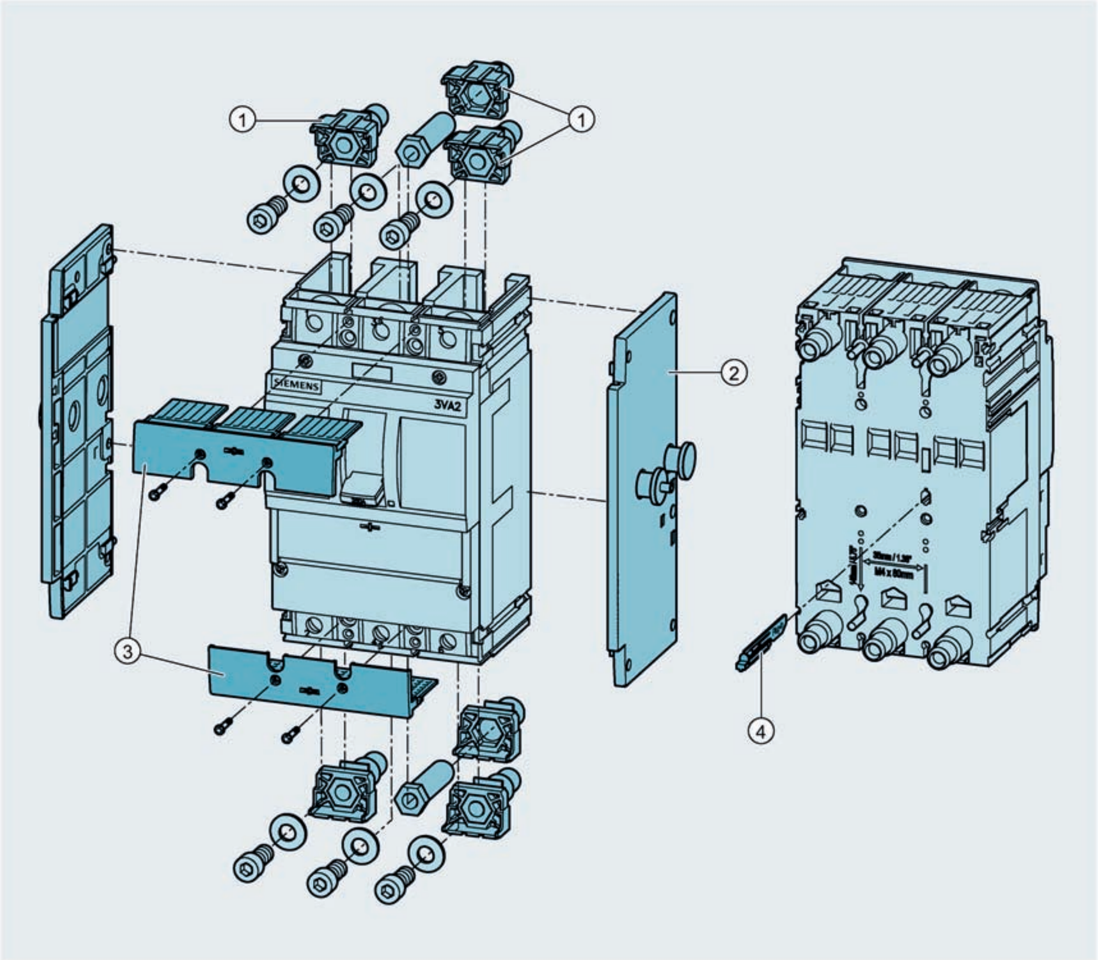

①	Plug-in contacts for attachment to the main terminals of the molded case circuit breaker
②	Side walls with guide bolts for mounting on the molded case circuit breaker
③	Screw-mounted terminal cover for the molded case circuit breaker
④	Autotrip plunger

Installation instructions

The draw-out socket is permanently mounted in the panel by means of the mounting screws included in the complete kit for draw-out technology.

The molded case circuit breaker / switch disconnector in molded case circuit breaker design is supplied with two assembly bolts (3-pole version) or four assembly bolts (4-pole version). These bolts are not required if the device is to be converted to a draw-out unit.

Terminal cover

Two terminal covers are included in the scope of supply of the complete kit for draw-out technology and the conversion kit for draw-out technology for the molded case circuit breaker. These two terminal covers are intended for installation over the molded case circuit breaker. If terminal covers are to be attached to the busbars of the draw-out socket, they must be ordered separately, see chapter Insulating measures (Page 246).

Autotrip plunger

An autotrip plunger is supplied as standard with every complete kit and every conversion kit for converting a molded case circuit breaker to draw-out technology.

⚠WARNING

Make sure that the autotrip plunger is correctly installed

The molded case circuit breaker cannot be safely moved into or out of the socket without an autotrip plunger. Moving it into or out of the socket when the main contacts are closed (breaker position ON) can cause arcs to form between contacts and result in irreparable damage to the circuit breaker or the electrical installation, and possibly cause physical injury to personnel.

Once installed, the autotrip plunger cannot be dismantled again!

Note the color coding and labels for the autotrip plunger:

- Plug-in technology: Black, labeled "Plug-in"
- Draw-out technology: Grey, labeled "Draw-out"

When a molded case circuit breaker is converted to a molded case circuit breaker for draw-out technology, the autotrip plunger is installed from the rear of the device and latched.

The plunger performs various safety functions in operation:

- It prevents closure of the main contacts of the molded case circuit breaker when the breaker is inserted in the draw-out socket and in an undefined position (breaker status indication is UNBLOCK).
- It allows the breaker to be closed in the defined positions TEST and CONNECT.
- It trips the molded case circuit breaker (TRIP) when the breaker's main contacts are closed (switching position ON) and an attempt is made to move the breaker out of one of the three defined positions CONNECT, TEST or DISCON using the crank handle.

Auxiliary circuit connectors

3VA molded case circuit breakers or 3VA switch disconnectors are frequently equipped with internal accessories, e.g. auxiliary switches and auxiliary releases. A broad range of internal accessory components is also available for the 3VA molded case circuit breaker. For further information, please refer to chapter Internal accessories (Page 191).

To ensure that the electrical connections required by draw-out units can be quickly and safely disconnected, auxiliary circuit connectors can be installed.

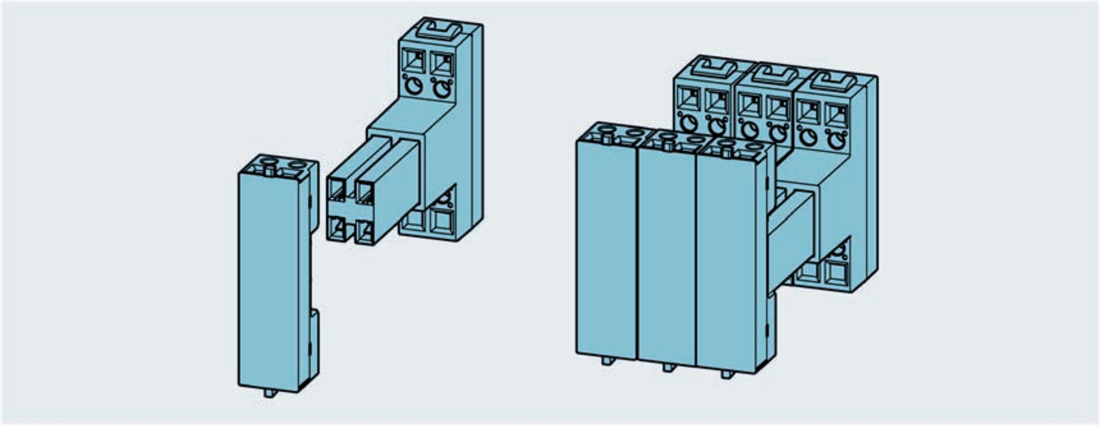

The part of the auxiliary circuit connectors on the circuit breaker side is mounted on the underside of the molded case circuit breaker using the cable cages and is electrically connected to the internal accessories. Appropriate openings and cable ducts are provided in the 3VA molded case circuit breaker for routing stranded wires. The socket-end half of the auxiliary circuit connector with the movable telescopic rail is inserted in the socket and electrically connected to the customer's installation.

When the molded case circuit breaker is inserted into the draw-out unit, an electrical connection between the internal accessories in the breaker and the customer's installation is quickly established.

Note

Plug-in and draw-out units use different versions of the auxiliary circuit connector.

The draw-out version has a longer, movable telescopic rail because the distance to be bridged in the draw-out socket is longer.

Further details about auxiliary circuit connectors can be found in chapter Auxiliary circuit connector (Page 301).

Position signaling in the draw-out socket

Several position signaling switches (number depends on socket size) can be installed in the right-hand side wall of the draw-out socket. These auxiliary switches are capable of signaling breaker positions DISCON, TEST and CONNECT. The auxiliary switches also output a position indication signal if the molded case circuit breaker in the draw-out socket is not in one of the positions specified above. For information, please refer to chapter Position signaling switches (Page 295).

Protection against unauthorized operation of molded case circuit breaker

Padlocks for protection against unauthorized operation

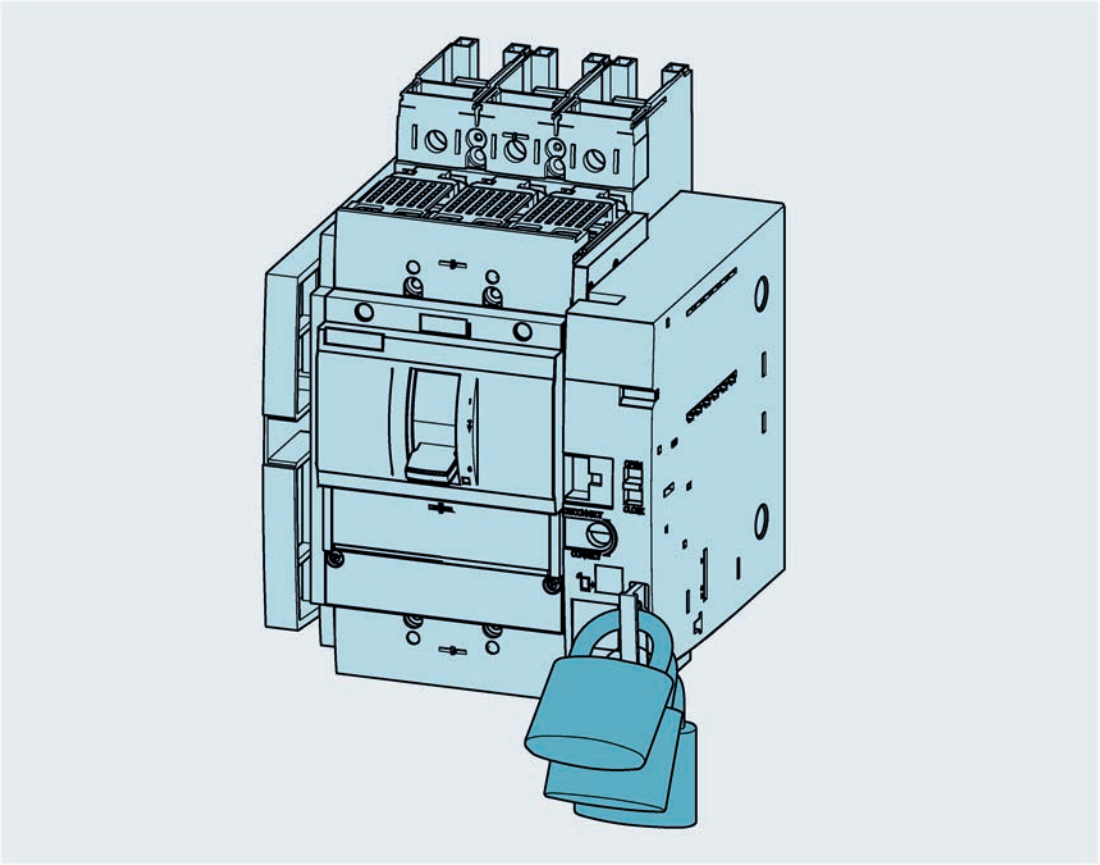

To provide protection against unauthorized operation of the molded case circuit breaker, padlocks can be inserted through the plastic frame opening of the padlock locking unit on the right side wall of the draw-out socket. The plastic frame is simple to pull out. The crank handle opening is mechanically sealed when the plastic frame is in the OUT position.

Openings for padlocks in plastic frame:

- Up to three padlocks
- Shackle diameter 6 mm to 8 mm / 0.25" to 0.31"

Attach padlocks

1. Move the molded case circuit breaker into the CONNECT, TEST or DISCON position.
   The breaker must be in one of these positions before the plastic frame can be pulled out.
2. Pull out the plastic frame.
   The crank handle opening is sealed off.
3. Insert padlock shackles through the plastic frame and lock padlocks as illustrated above.

Cylinder lock for protection against unauthorized operation

A cylinder lock can be retrofitted in the right-hand side wall of the draw-out socket. Like the plastic frame and padlocks, this cylinder lock is capable of locking a molded case circuit breaker in either the CONNECT, TEST or DISCON position. The cylinder lock utilizes the locking mechanism of the plastic frame. This is evident from the way the plastic frame moves into or out of the socket as the cylinder lock is turned.

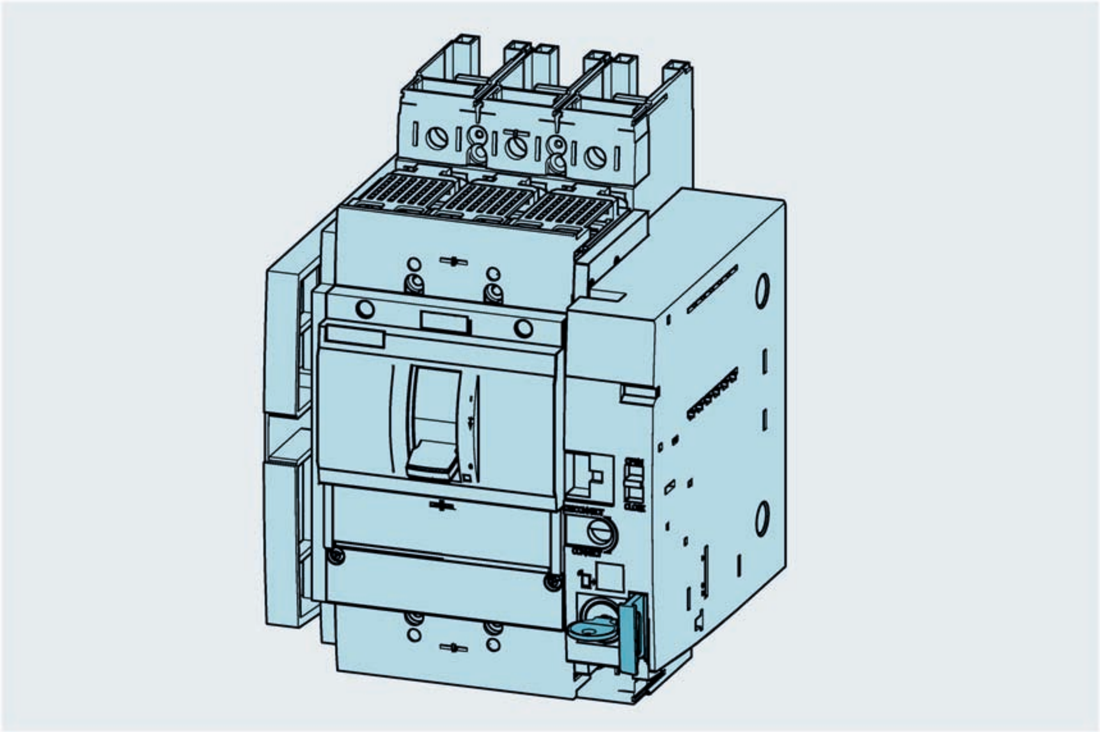

Signaling of locked/unlocked status

The locked or unlocked status of a draw-out unit can be signaled electrically. This requires the installation of a position signaling switch (3VA9987-0KB00) in the right-hand side wall of the draw-out socket. This switch signals whether the plastic frame described above is in the "IN" or "OUT" position. For further details, refer to chapter Position signaling switches (Page 295).

Integration of molded case circuit breaker position signal into a communication network

By means of the COM100 and COM800 breaker data servers, various statuses of multiple molded case circuit breakers can be queried and passed on by bus systems. This includes messages such as "Breaker tripped", "Breaker on", "Breaker off", reason for tripping. Depending on the version of the 3VA molded case circuit breaker, actual current and voltage measurements can also be passed on. To provide this communications capability, the molded case circuit breaker itself is equipped with a COM060 communication module which functions as the breaker's actual communications interface.

In addition to the status information listed above, the position of the molded case circuit breaker in the draw-out unit can also be transferred. For this purpose, the molded case circuit breaker and the draw-out socket must be equipped with the communications interface for the draw-out unit. This kit allows the position of the molded case circuit breaker in the draw-out unit to be picked up and transferred to the COM060 communication module and from there to the higher-level communication network. For further information about the communication kit for draw-out units, please refer to chapter Communications interface for draw-out unit (Page 300).

Operation through the panel door

The molded case circuit breaker can be optionally installed in the panel in such a way that the breaker can be operated even when the panel door is closed. Draw-out versions of molded case circuit breakers can then be switched on or off when the panel door is not open. This is made possible by a cutout in the panel door which allows access to the main control elements, i.e the handle and the <PUSH TO TRIP> button of the molded case circuit breaker, but prohibits access to other live components inside the panel. This solution is referred to as a "door feedthrough".

Door feedthroughs are mounted on the front of the molded case circuit breaker and securely attached to the breaker by means of two bolts and a latch.

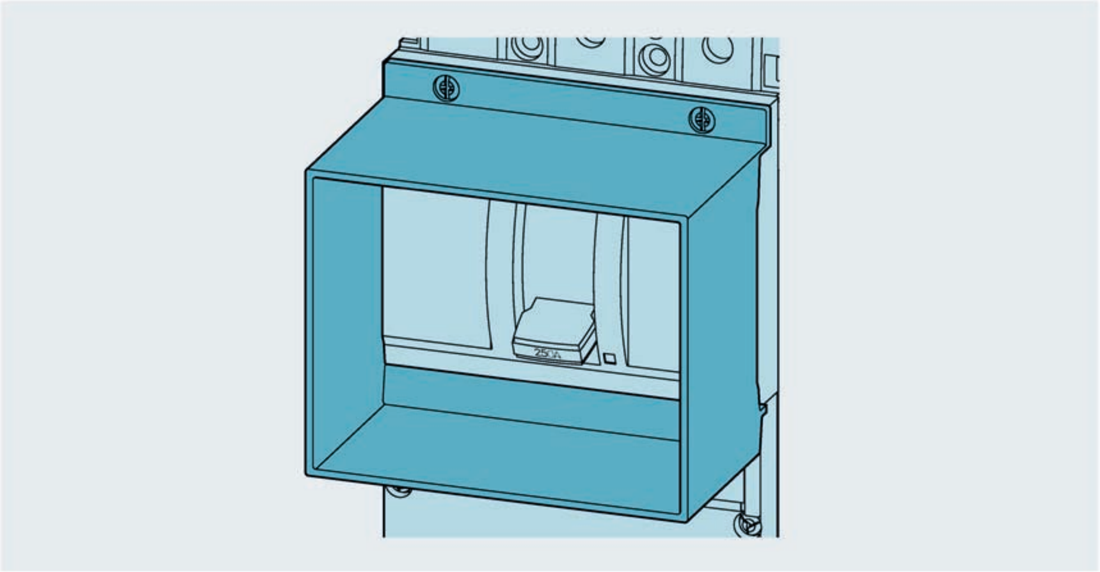

The door cutout must be positioned such that it is flush with the door feedthrough. It must also be positioned in such a way as to minimize the size of the gap between the feedthrough walls and the cutout. A cover frame can be fitted as well in order to obtain an optimum finish.

An opening in the panel through which the crank handle can be inserted must be provided in addition to the cutout for the door feedthrough.

With its straight sides, the door feedthrough is designed to allow the molded case circuit breaker to be moved through positions DISCON, TEST and CONNECT, while at the same time providing a permanently tight seal around the feedthrough area (degree of protection IP30) and preventing access to live components inside the panel.

Markings are visible on the door feedthrough to help the user identify the current position of the molded case circuit breaker as it is moved into or out of the panel. Since mounting dimensions may vary slightly, however, these markings should be regarded as a rough guide only. The crank handle mechanism provides the user with feedback information about the molded case circuit breaker position, e.g. whether it has been correctly inserted.

Benefits of draw-out technology

- Defective molded case circuit breakers can be replaced quickly and easily
- Clear visual evidence of safe electrical isolation of main circuits
- Molded case circuit breaker and accessories can be function-tested in the TEST position
- Remote signaling of molded case circuit breaker positions CONNECT, TEST and DISCON
- Padlocks and / or cylinder locks can be used to lock draw-out unit so that the molded case circuit breaker cannot be inserted or removed by unauthorized persons
- Molded case circuit breaker can be operated through the panel door
- Degree of protection IP20 at all termination points
- No grounding required

See also

Locking and interlocking (Page 360)

4.4.6.2 Combination with other accessories

Accessories group	Component
Manual operators	Front mounted rotary operator
	Door mounted rotary operator
Remote-controlled operator	MO320 motor operator
	Synchronizable motor operator SEO520
Interlocks	Rear interlocking module
	Bowden cable interlock for handle
	Bowden cable interlock (for front mounted rotary operators)
Padlock devices for handle	

See also

Locking and interlocking (Page 360)

4.4.7 Accessories for plug-in and draw-out units

4.4.7.1 Description of individual product variants

Position signaling switches

These auxiliary switches are capable of signaling a variety of states via electrical connections. The position signaling switch is available in only one version.

Applications:

- Signal "Position of breaker in the draw-out unit"
- Signal "Draw-out unit locked / open"
- Signal "Plug-in unit - MCCB correctly bolted to plug-in socket"

The position signaling switches are changeover switches, i.e. they have three connections:

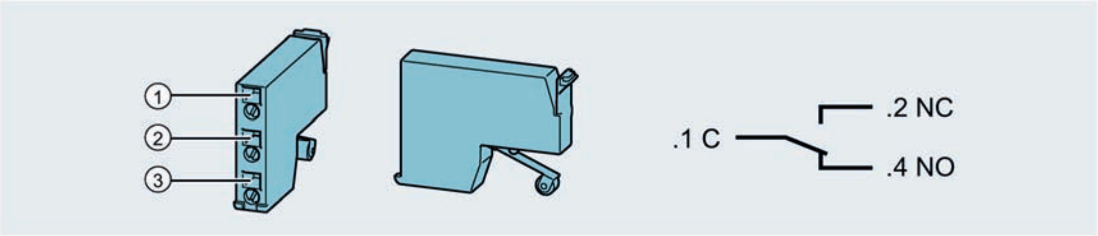

① NO contact
② NC contact
③ Common potential contact

Signal "Position of molded case circuit breaker in the draw-out unit"

Up to three position signaling switches can be integrated in the draw-out unit in order to transmit breaker position information to monitoring and control systems. They are installed in the right-hand side wall of the unit at the positions indicated in the diagram below:

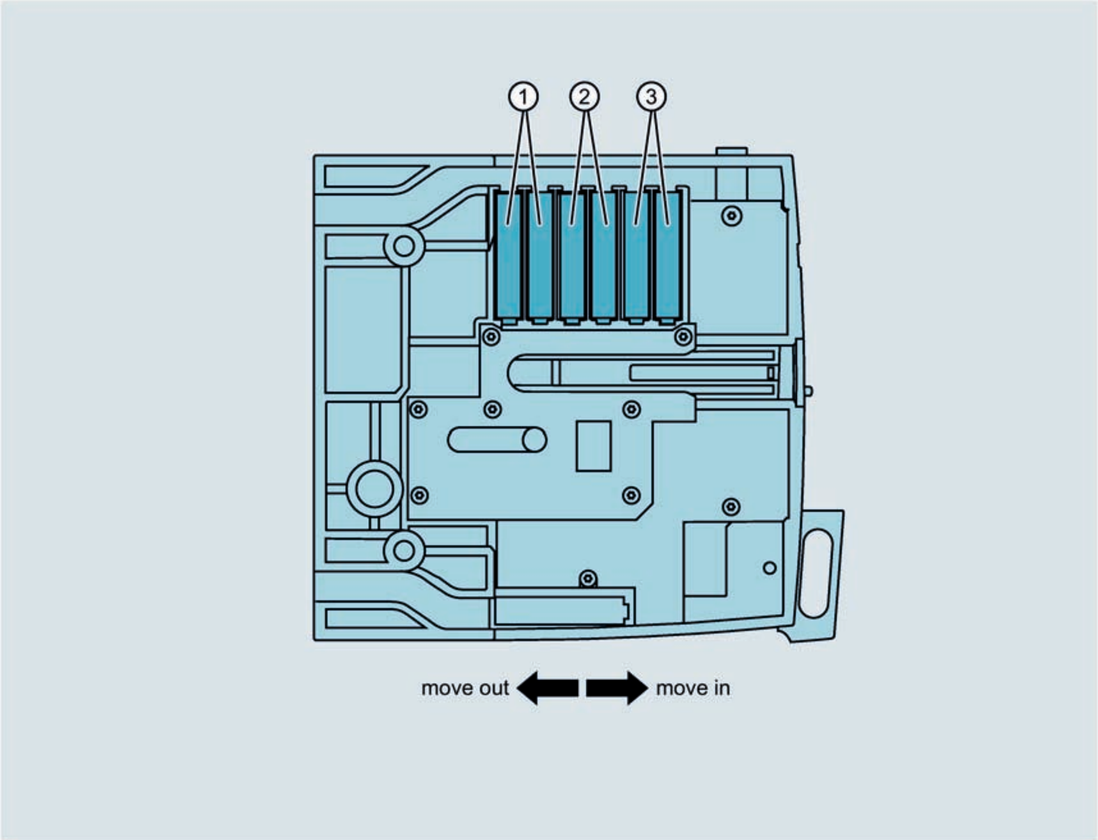

① 41a or 41b: Detects position CONNECT

② 42a or 42b: Detects position TEST

③ 43a or 43b: Detects position DISCON

Signal "Position of molded case circuit breaker in the draw-out unit"

It is irrelevant whether the position signaling switch is inserted in slot a or b. Only one position signaling switch per position is usually installed. The remaining free slots can be used for the signaling switches of the communication link kit or for an additional position signaling switch.

If the molded case circuit breaker in the draw-out unit is moved into a defined position with the crank handle, the corresponding position signaling switch outputs a signal that can be further used electrically, e.g. for visual or acoustic alarm indications.

If the molded case circuit breaker is not in any of the defined positions, the breaker status indicator displays the word UNBLOCK on a white background. In this position, the molded case circuit breaker is either off (position OFF, contacts open) or tripped (position TRIP, contacts open). The breaker main contacts cannot be closed with the breaker in the UNBLOCK state.

Depending on the position of the molded case circuit breaker in the draw-out unit, the outputs of the position signaling switches assume one of the following states:

Position signaling switch		Position of circuit breaker			
		DISCON	TEST	CONNECT	UNBLOCK
DISCON	NC	Open	Closed	Closed	Closed
	NO	Closed	Open	Open	Open
TEST	NC	Closed	Open	Closed	Closed
	NO	Open	Closed	Open	Open
CONNECT	NC	Closed	Closed	Open	Closed
	NO	Open	Open	Closed	Open

Signal "Draw-out unit locked / open"

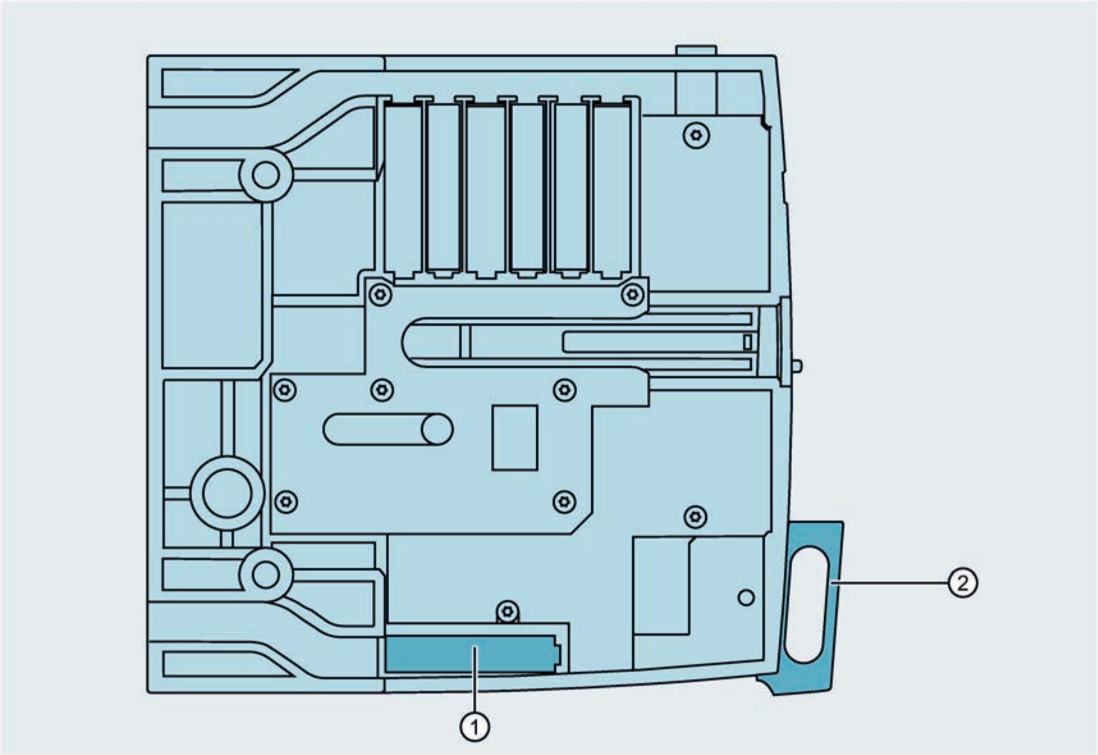

① Slot for position signaling switch for signal "Draw-out unit locked / open"

② Plastic frame for padlock locking unit

Signal "Draw-out unit locked / open"

A position signaling switch to transmit this signal is installed in position 44 of the right-hand side wall of the draw-out unit.

A position signaling switch in position 44 outputs a signal which indicates whether the padlock locking unit is in the OUT position, thereby locking the draw-out unit.

The draw-out unit can be locked in the defined breaker positions CONNECT, TEST and DISCON by padlocks or a cylinder lock (available as retrofit component). The position of the molded case circuit breaker cannot be changed when the draw-out is locked. In the locked state, the opening for the crank handle is mechanically sealed and the handle cannot be inserted.

To lock the unit using padlocks, the padlock locking unit on the draw-out unit must be pulled out manually so that the shackles of the padlocks can be inserted through the opening. When the draw-out unit is locked by the cylinder lock, the padlock locking unit moves out automatically as the cylinder lock is turned because it is mechanically coupled with the cylinder lock in the draw-out unit. The position of the padlock locking unit ultimately determines the position of the contacts of the position signaling switch.

	NO	NC
	Closed	Open
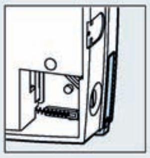	Open	Closed

Signal "Plug-in unit - MCCB correctly bolted to plug-in socket"

This option is provided for plug-in units only. Depending on the socket size, up to two position signaling switches can be installed in slot No. 46.

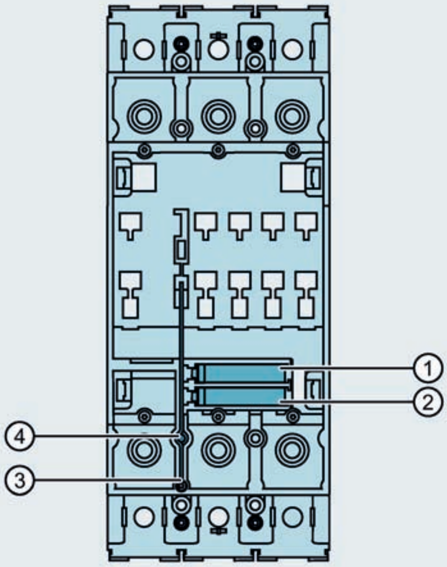

① Slot 46 for position signaling switch of the plug-in socket
② Slot 46 for position signaling switch of the plug-in socket
③ Mechanical system for actuation of position signaling switches when the bolt is tightened
④ Bolt hole which determines the signal output by the position signaling switches

	NO	NC
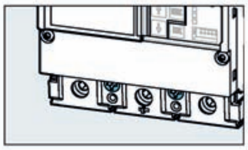	Closed	Open
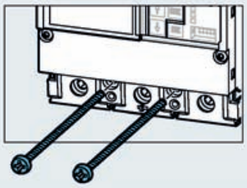	Open	Closed

With this application, the position signaling switches indicate whether the molded case circuit breaker is inserted in the plug-in socket and secured by at least one bolt. The reason for this application is that the molded case circuit breaker needs to be secured in position by mounting screws in the plug-in socket. The four mounting screws supplied with the complete kit for plug-in technology must be used for this purpose.

Communications interface for draw-out unit

The pre-assembled cable set which functions as the communications interface for the draw-out unit consists of a pre-assembled cable with a mini USB port at one end and three special position signaling switches at the other. It is also supplied with another cable with mini USB connector and tab connector.

Attaching the cable set

1. Insert the three position signaling switches of the cable set in the right-hand side wall according to the color coding of the cables, see diagram below.
   It is irrelevant whether the switches are inserted in slots a or b.

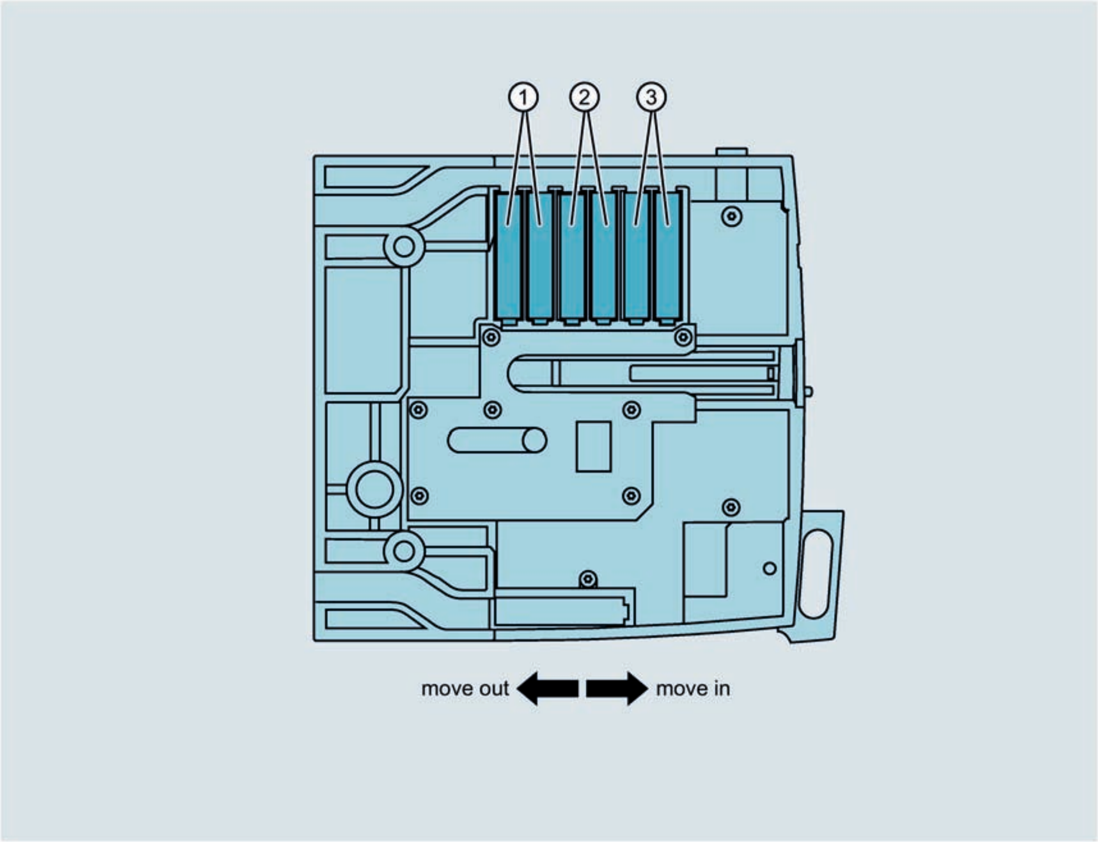

①	CONNECT:	Position signaling switch with green cables
②	TEST:	Position signaling switch with blue cables
③	DISCON:	Position signaling switch with red cables

   The remaining slots are normally used to install standard position signaling switches.

2. Remove the seal over the opening for the micro USB port on the right-hand side wall.
3. Insert the USB connector attached to the cable set into the micro USB port in the right-hand side wall.
4. Store the cable in the space available behind the side wall.
5. Connect the position signaling switches and the COM060 communication module to the USB connector and tab connector of the second cable.

The cable with pre-assembled USB and tab connectors can also be ordered as an individual item for installation on molded case circuit breakers prepared for use as draw-out units.

For detailed instructions on how to install the communications interface for the draw-out unit, please refer to the relevant Operating Instructions (http://support.automation.siemens.com/WW/view/en/80597324).

For instructions on how to read out data via remote data transfer, refer to the operating instructions for the COM100/COM800 breaker data server.

Auxiliary circuit connector

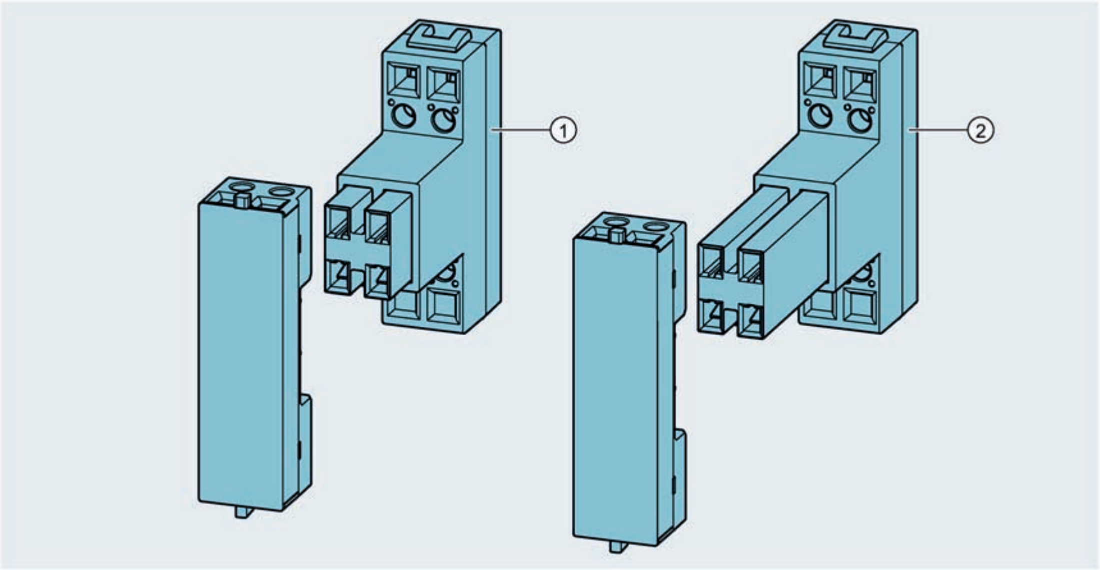

① Plug-in technology

② Draw-out technology

Auxiliary circuit connectors are required only if the molded case circuit breaker to be converted to plug-in or draw-out technology is equipped with internal accessories. Plug-in units use a different design of auxiliary circuit connector than draw-out units.

The number of auxiliary circuit connectors required depends on the accessories to be installed in the molded case circuit breaker and ultimately on the number of electrical connections which need to be brought out of the molded case circuit breaker. Each auxiliary circuit connector can be used to connect up to four cables. Accordingly, the breaker-end and socket-end halves of the auxiliary circuit connectors have four screw-type terminals which are labeled ".1" to ".4".

A total of nine auxiliary circuit connectors can be installed depending on the size of the molded case circuit breaker and the size of the plug-in or draw-out socket. The slots for auxiliary circuit connectors are labeled from right to left in the socket, starting at 1.

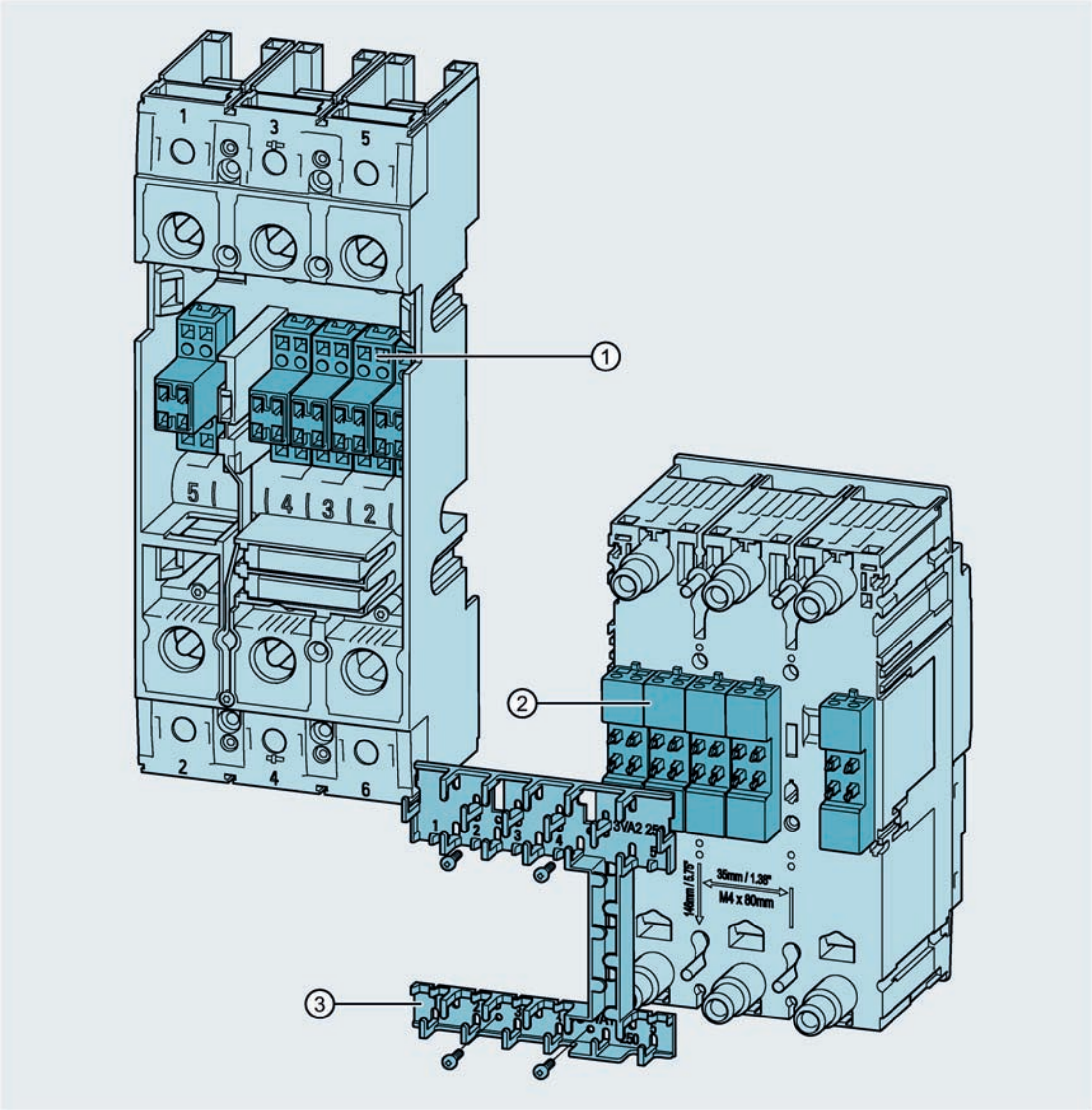

① Socket-end auxiliary circuit connector

② Breaker-end auxiliary circuit connector

③ Cable cage

Cable cages are used to attach the breaker-end half of the auxiliary circuit connector to the underside of the molded case circuit breaker. Slot numbers are also printed on the cable cages. The design of the cable cages for the top and bottom halves of the molded case circuit breaker is different so that the cages cannot be mixed up or installed in the wrong position. The fixing tongues of the breaker-end half of the auxiliary circuit connectors latch into small recesses in the cable cages which are screw-mounted to the rear panel of the circuit breaker. The auxiliary circuit connectors are securely fixed once the cable cages have been installed.

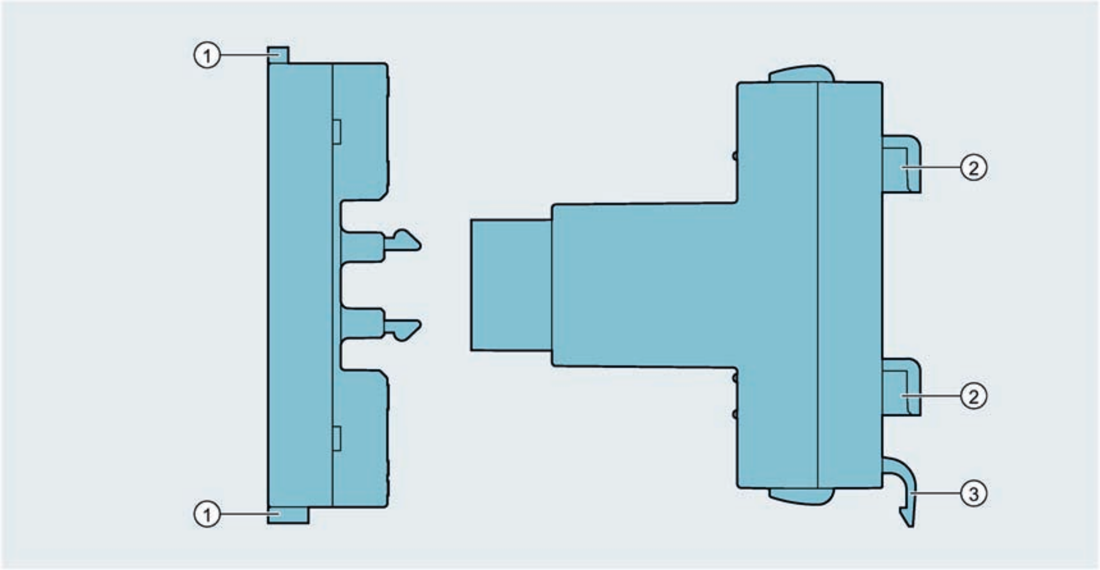

①	Fixing tongue (breaker end)
②	Fixing hook (socket end)
③	Latching element (socket end)

The socket-end half of the auxiliary circuit connectors is simply snapped into the socket.

Various cable routing openings and ducts are provided in the socket and the molded case circuit breaker. For further details, please refer to the operating instructions for the complete kits for plug-in or draw-out technology.

See also

Cable cage (Page 306)

Door feedthrough

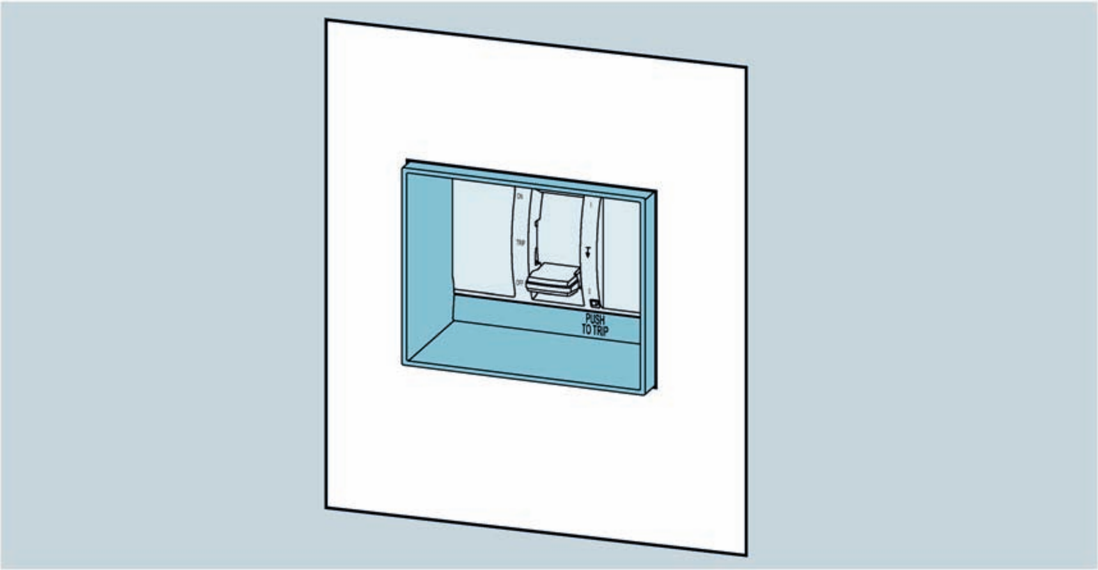

Door feedthroughs must be installed for applications which require

- direct operation of a molded case circuit breaker even when the panel door is closed,
- the draw-out version of a molded case circuit breaker to be electrically isolated from or connected to the installation while the panel door is closed,
- prevention of access to live components inside the panel.

Door feedthroughs are mounted over the front of the molded case circuit breaker and securely attached to the breaker by means of two bolts and a latch.

Terminal cover for a molded case circuit breaker converted to plug-in or draw-out technology

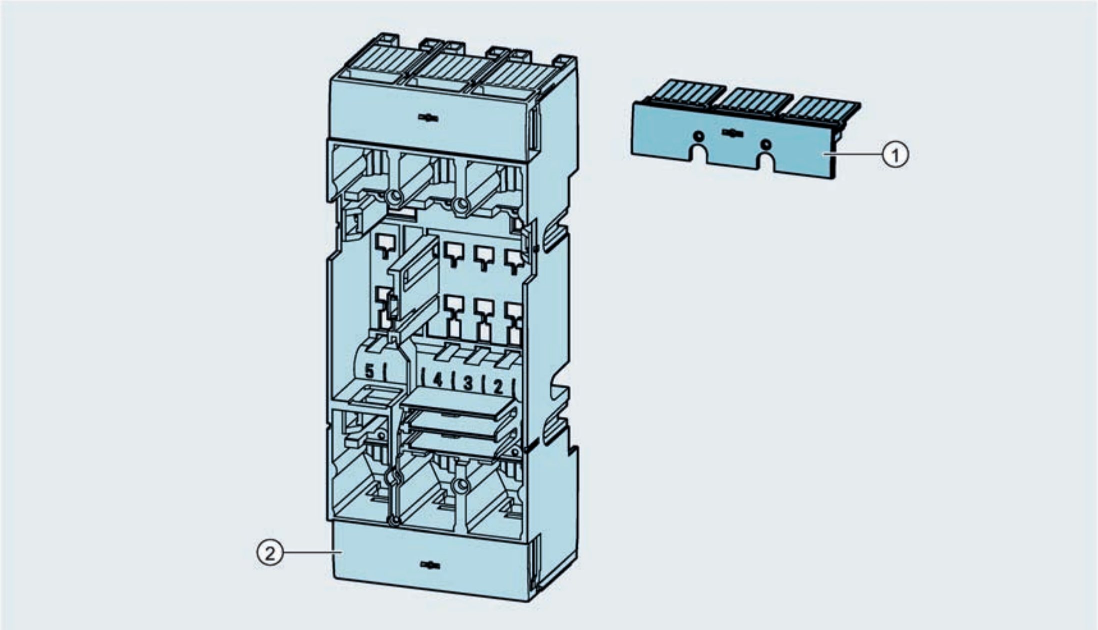

① Terminal cover with molded grips, can be screwed to contact unit
② Terminal cover for covering the termination area

Two screw-mounted terminal covers ① are included in the scope of supply of the complete kits and the conversion kits for plug-in and draw-out technology. These feature molded grips to ease withdrawal of the molded case circuit breaker from its socket. Since it requires significant force to remove a molded case circuit breaker from its socket, the plug-in terminal covers are bolted to the contact unit.

These terminal covers can be ordered separately as spare parts.

The additionally available terminal covers ② are used for the plug-in technology as well as the draw-out technology for covering the terminal area.

Cable cage

Cable cages are used to attach the breaker-end half of auxiliary circuit connectors to the molded case circuit breaker. They are also designed to act as cable ducts for installing wires from internal accessories to the auxiliary circuit connector. For further information about cable cages, please refer to chapter Auxiliary circuit connector (Page 301).

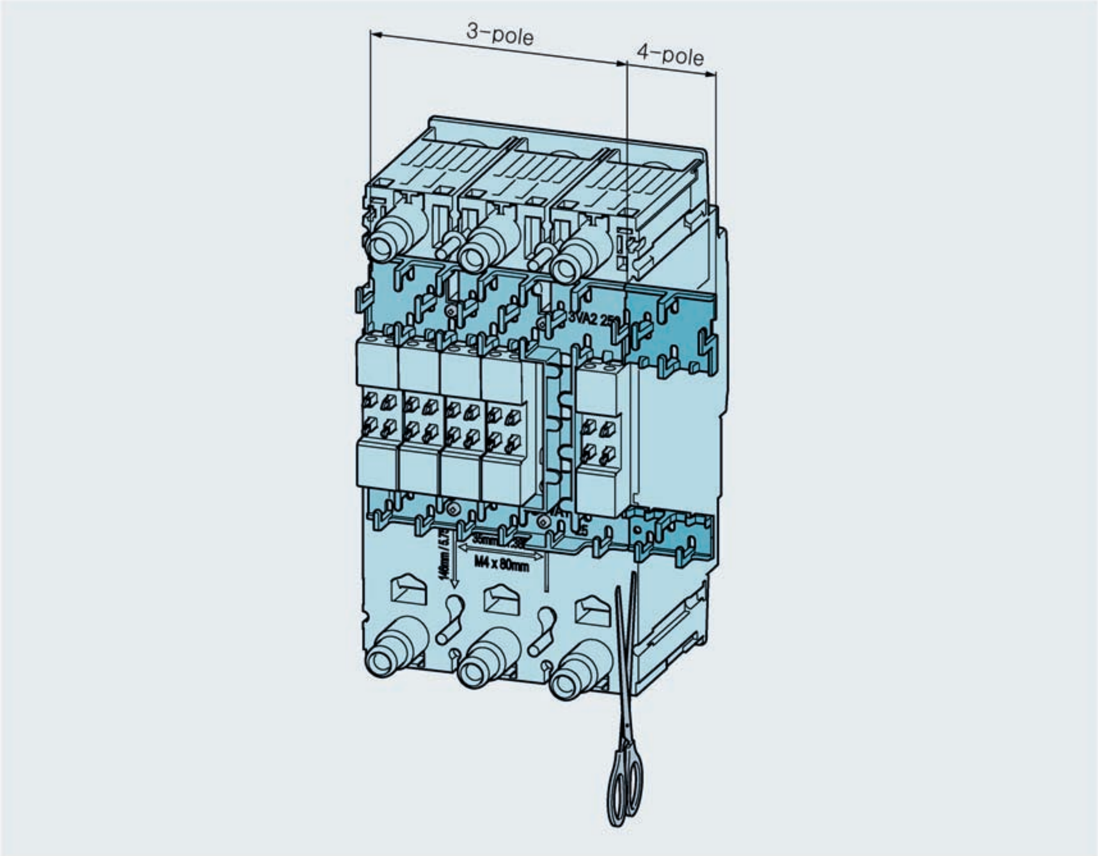

Cable cages consist of a top half and a bottom half. These parts are designed such that they cannot be mounted in the wrong position at the rear of the molded case circuit breaker.

Cable cages are included in the scope of supply of the conversion kits and complete kits for converting molded case circuit breakers to plug-in or draw-out units and are therefore also supplied with complete kits. They are available as standard only in the broadened version for 4-pole units. For use on 3-pole units, part of the cable cage need only be cut away (at the required breaking point).

4.4.7.2 Overview of technical specifications

Technical specifications of the accessories for internal components of molded case circuit breakers in plug-in and draw-out technology:

Position signaling switch				
Article No.				3VA9987-0KB00
Rated operating voltage U_e			V	400 AC
			V	250 DC
Rated insulation voltage U_i			V	500 AC
Rated frequency f_n			Hz	50 / 60
Rated operating current I_e / U_e	AC-13	12 V	A	6
		24 V	A	6
		48 V	A	6
		110 V	A	6
		230 V	A	6
	DC-15	12 V	A	6
		24 V	A	3
		48 V	A	1
		110 V	A	0.5
		230 V	A	0.25
Thermal current I_{th}			A	6
Contact switching				001
Conductor cross section S			mm^2	0.5 … 1.5
Degree of protection of terminals (when breaker is connected)				IP20

Auxiliary circuit connector		
Article No.		3VA9977-0KP80
		3VA9977-0KD80
Rated operating voltage U_e	V	AC 250
	V	DC 250
Rated insulation voltage U_i	V	AC 500
Rated frequency f_n	Hz	50 / 60
Rated operating current I_e / U_e	AC-13	3 A / 400 V
	DC-15	0.15 A / 250 V; 3 A / 125 V
Thermal current I_{th}	A	10
Conductor cross section S	mm^2	0.5 … 1.5
Degree of protection of terminals (when breaker is connected)		IP20

4.4.7.3 Combination with other accessories

Information about combination with other accessories

- The communications interface for the draw-out unit and the switches for signaling the position of the molded case circuit breaker in the draw-out unit are mutually compatible. For further information, please refer to the following chapters:
  Position signaling switches (Page 295)

  Communications interface for draw-out unit (Page 300)
- The switches for signaling whether or not the molded case circuit breaker is locked have no influence on other accessories described in chapter Position signaling switches (Page 295)

Note

No transfer of "locked / not locked" signals

The information "locked / not locked" cannot be transferred via the COM060 communication module.

- A molded case circuit breaker which requires a communications interface to transfer signals must be equipped with a COM060 communication module.
- When internal accessories are integrated in a molded case circuit breaker, auxiliary circuit connectors and cable cages for plug-in and draw-out technology must also be installed.
- Door feedthroughs are required only if the molded case circuit breaker needs to be operated when the cubicle door is closed. The door feedthrough is compatible with position signaling switches, communications interface and auxiliary circuit connectors with cable cages.
- The terminal cover for plug-in technology can be installed in combination with any other internal accessories. It does not have any effect on other accessories.
- A variable depth adapter (see section Door mounted rotary operator (Page 316)) can be used in conjunction with the door mounted rotary operator in order to compensate the racking distance and so allow the molded case circuit breaker to be moved out when the cubicle door is closed.

4.5 Manual operators

The manual operators for 3VA molded case circuit breakers are described in this chapter.

Overview of manual operators

The manual operators available for 3VA molded case circuit breaker are listed below:

- Front mounted rotary operator (optionally with door interlock)
- Door mounted rotary operator
  - Fixing bracket for long shafts
  - Variable depth adapter for draw-out units
  - Supplementary handle for door mounted rotary operator
- Side wall mounted rotary operator (optionally with mounting plate)

The following accessories are available for all manual operators:

- Illumination kit
- Cylinder locks for locking, blocking and interlocking

4.5.1 Opening, closing and resetting the 3VA molded case circuit breaker

Opening and closing

- To close the 3VA molded case circuit breaker:
  Turn the manual operator to the ON (I) position.

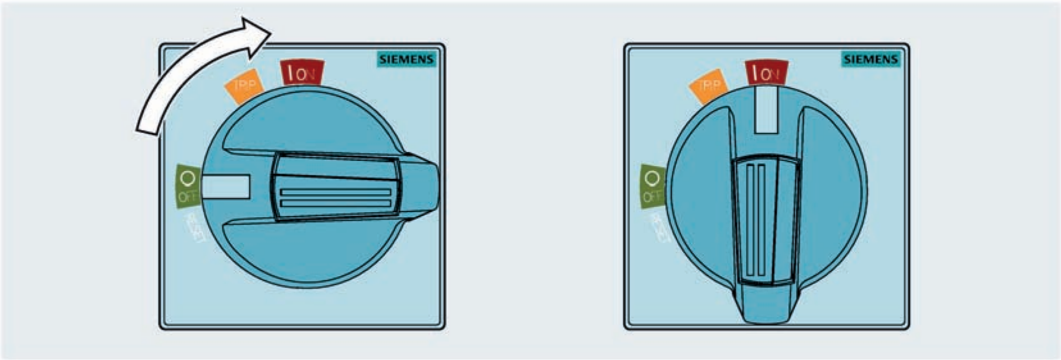

- To open the 3VA molded case circuit breaker:
  Turn the manual operator to the OFF (O) position.

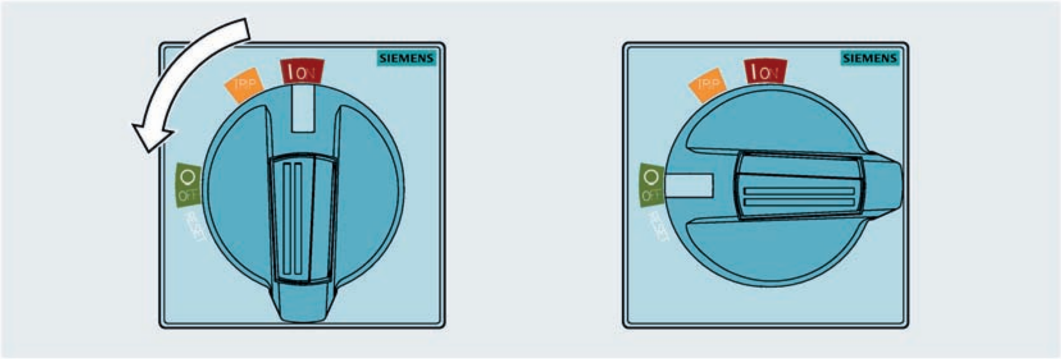

Resetting the manual operator after the molded case circuit breaker has tripped

When the molded case circuit breaker trips, the manual operator moves automatically from the ON (I) to the TRIP position.

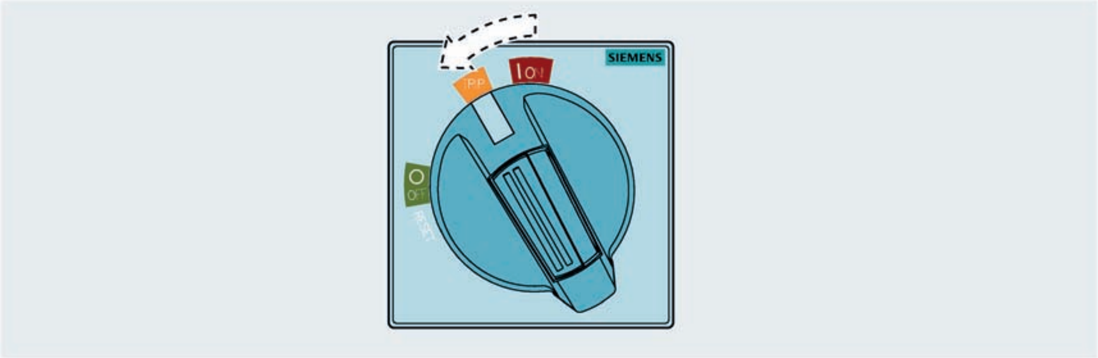

The molded case circuit breaker remains in the tripped state until the manual operator is reset:

1. Clear the fault which has caused the molded case circuit breaker to trip.
2. Turn the manual operator counter-clockwise to the limit stop (RESET position, at or just past OFF (O)).
   The manual operator remains in the OFF (O) position.

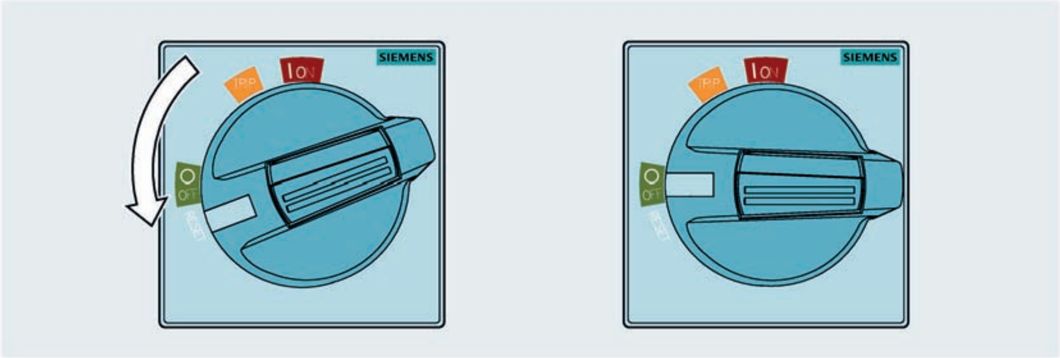

3. Turn the manual operator to the ON (I) position.

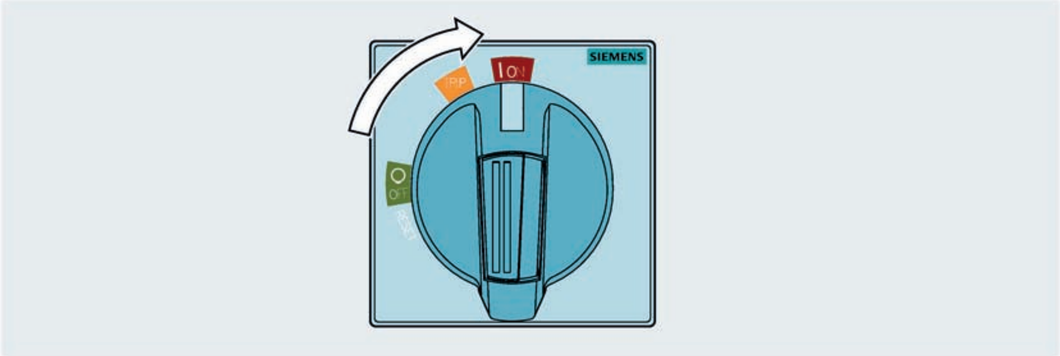

The molded case circuit breaker is closed again.

4.5.2 Front mounted rotary operator

The front mounted rotary operator is available in two versions:

- With door interlock
- Without door interlock

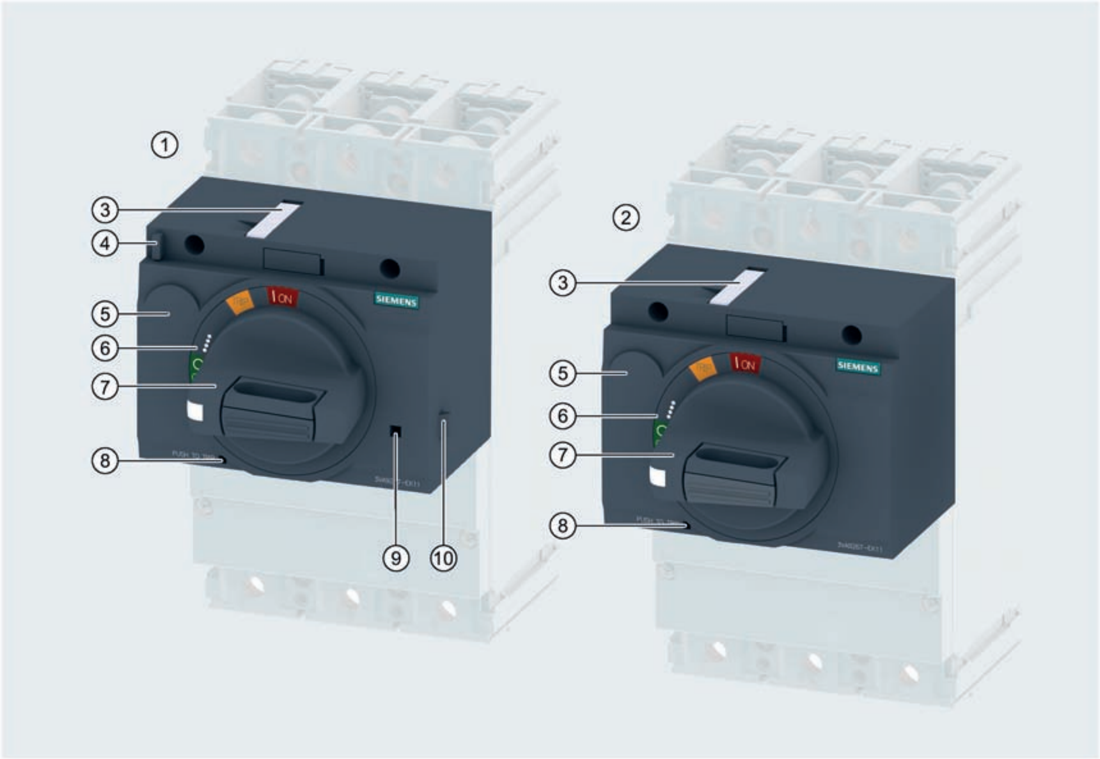

① Front mounted rotary operator with door interlock
② Front mounted rotary operator without door interlock
③ Device for up to 3 padlocks
④ Door contact (door interlock element)
⑤ Cylinder lock device
⑥ Indication of the breaker status (on, off, trip) (see below)
⑦ Handle with mechanism for up to 3 padlocks
⑧ Trip unit button <PUSH TO TRIP>
⑨ Defeat function (door interlock element)
⑩ Door interlock

Indication of the breaker status on front mounted rotary operator

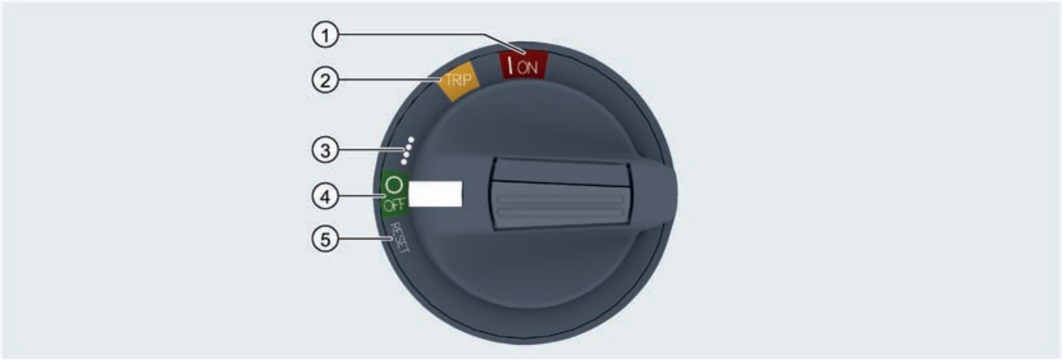

① ON: Breaker closed
② TRIP: Breaker tripped
③ Mounting position
④ OFF: Breaker open
⑤ RESET: Reset following a trip

Front mounted rotary operator with door interlock

The front mounted rotary operator with door interlock projects through the panel door. This arrangement ensures that the molded case circuit breaker can be switched on only when the panel door is closed. The door is locked automatically when the front mounted rotary operator is turned to position ON (**I**).

Overriding the door interlock

The door interlock can be overridden by a deliberate action. This means that the door can be opened with the operator in position ON (I), e.g. so that maintenance can be carried out.

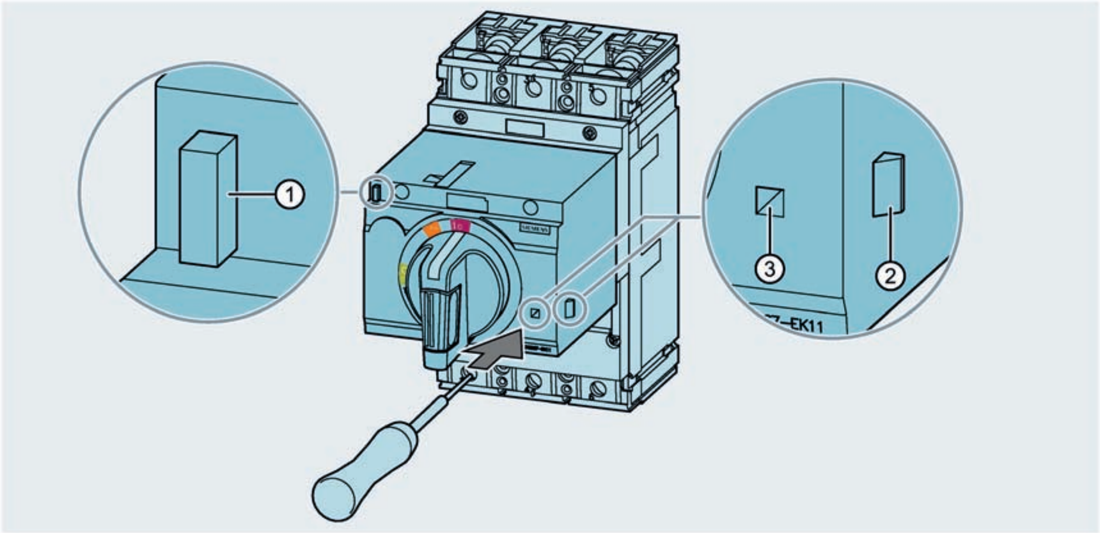

① Door position switch
② Door interlock
③ Defeat function

Procedure

1. Press the door interlocking pin with a sharp object.
2. Hold the pin down while the door is opened.

Switch on the circuit breaker with the panel door open

The door contact must be operated manually in order to switch on the molded case circuit breaker with the panel door open. The handle can then be moved to the ON (**I**) position.

Testing the tripping mechanism

The button <PUSH TO TRIP> can be pressed to perform a function test on the tripping mechanism.

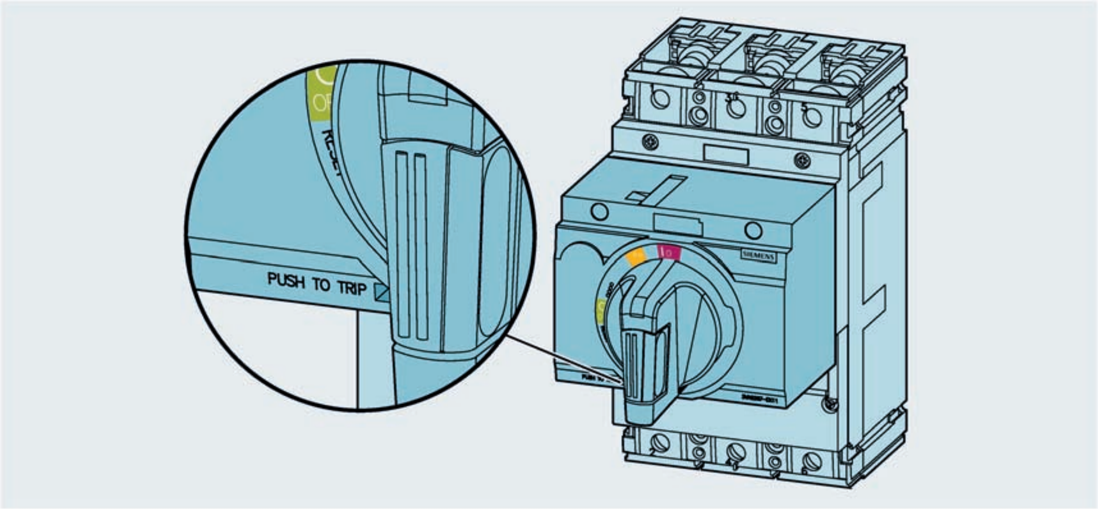

Procedure

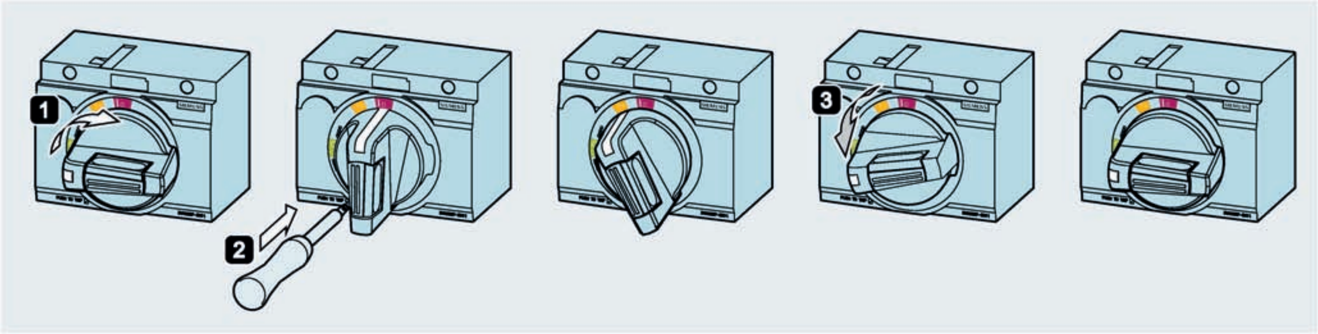

1. Turn the front mounted rotary operator to position ON (I) in order to close the molded case circuit breaker.
2. Press the button <PUSH TO TRIP> with a tool such as a screwdriver.
   The front mounted rotary operator moves from position ON (I) to position TRIP. The molded case circuit breaker is now in the tripped state.
3. Turn the front mounted rotary operator counter-clockwise to the limit stop (RESET position, at or just past OFF (O)).
   The front mounted rotary operator remains in the OFF (O) position and the molded case circuit breaker can now be closed again.

4.5.3 Door mounted rotary operator

With the door mounted rotary operator installed, it is possible to operate the molded case circuit breaker through the panel door without opening the door.

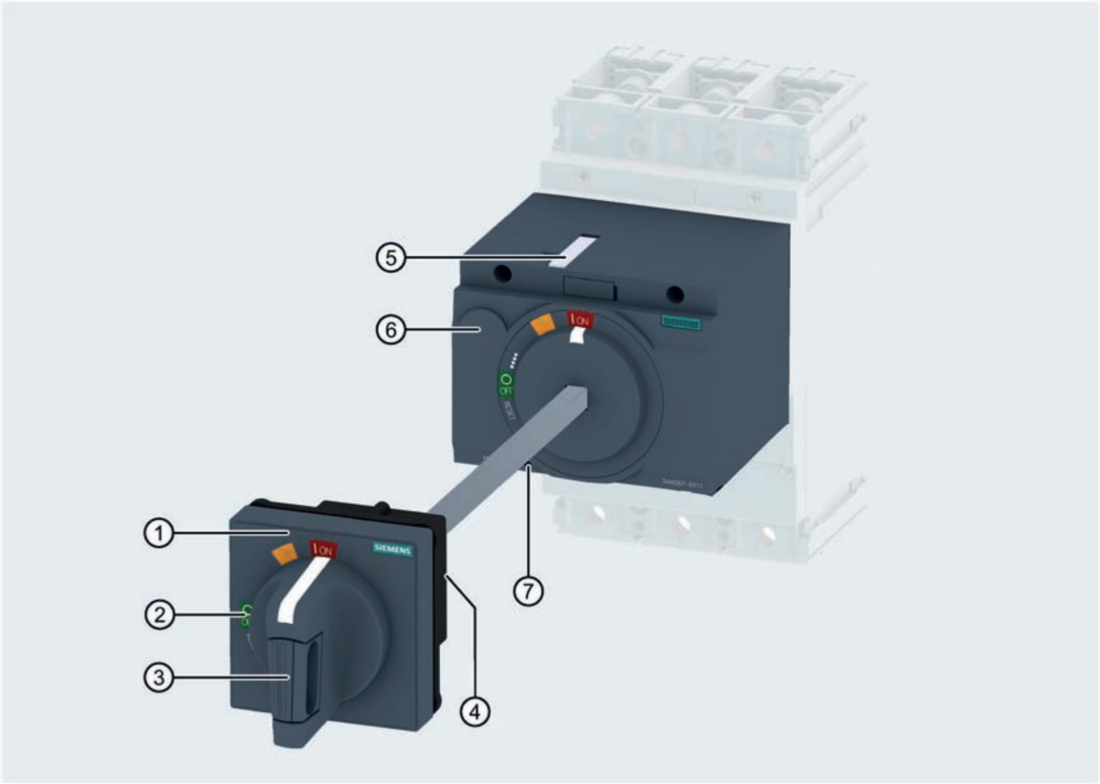

① Door mounted rotary operator
② Indication of the breaker status ON, TRIP, mounting position, OFF, RESET
For mounting position, see chapter Front mounted rotary operator (Page 312)
③ Handle with device for up to 3 padlocks
④ Tolerance compensation
⑤ Device for up to 3 padlocks
⑥ Cylinder lock device (type Ronis)
⑦ Trip unit button <PUSH TO TRIP>

Door interlock with door mounted rotary operator

The door interlock of the door mounted rotary operator locks the door as soon as the door mounted rotary operator is turned to position ON (I).

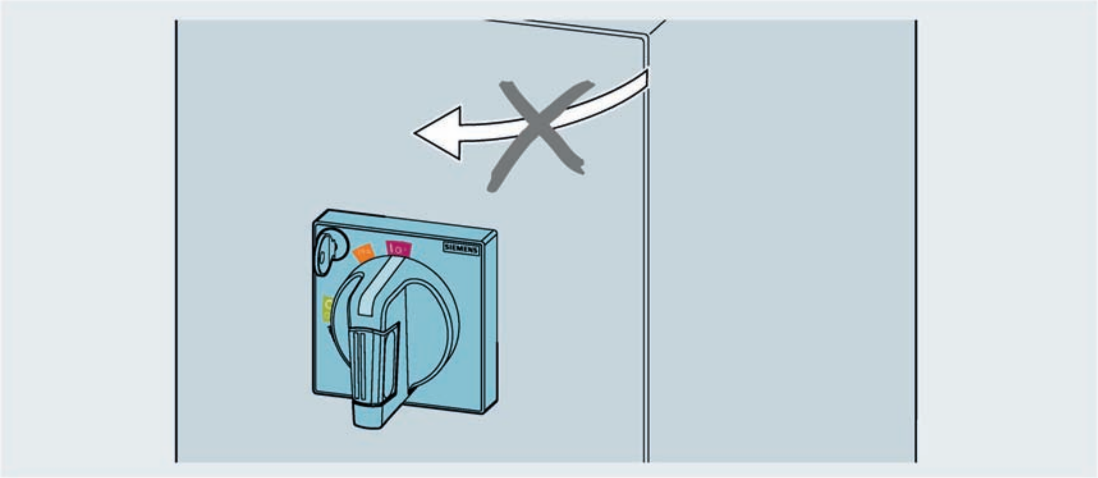

Overriding the door interlock

The door interlock can be overridden by a deliberate action. This means that the door can be opened with the operator in position ON (I), e.g. so that maintenance can be carried out. The door interlock can also be completely deactivated by a small modification on the inside of the handle. The panel door can then also be opened at any time without additional measures if the circuit breaker is switched on (position ON). For details, see the Operating Instructions (https://support.industry.siemens.com/cs/ww/en/view/80600132).

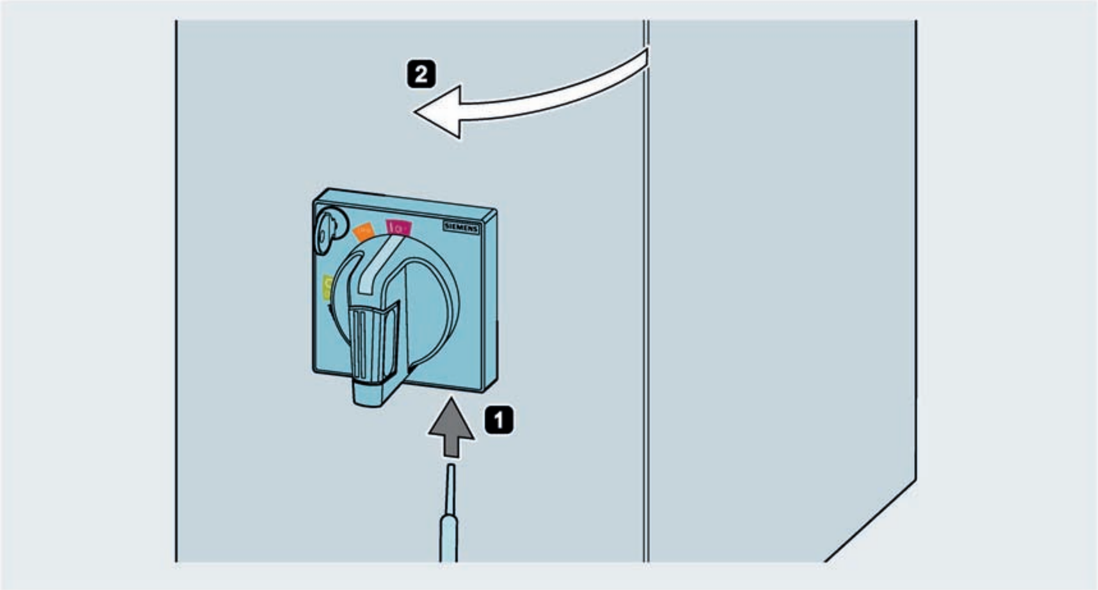

Procedure

1. Press the door interlocking pin with a sharp object.
2. Hold the pin down while the door is opened.

See also

(https://support.industry.siemens.com/cs/ww/en/view/80600132)

Tolerance compensator

Door mounted rotary operators are supplied as standard with a tolerance compensator. This device compensates any potential minor offset between the rotary switch of the cubicle doors and the shaft of the door mounted rotary operator.

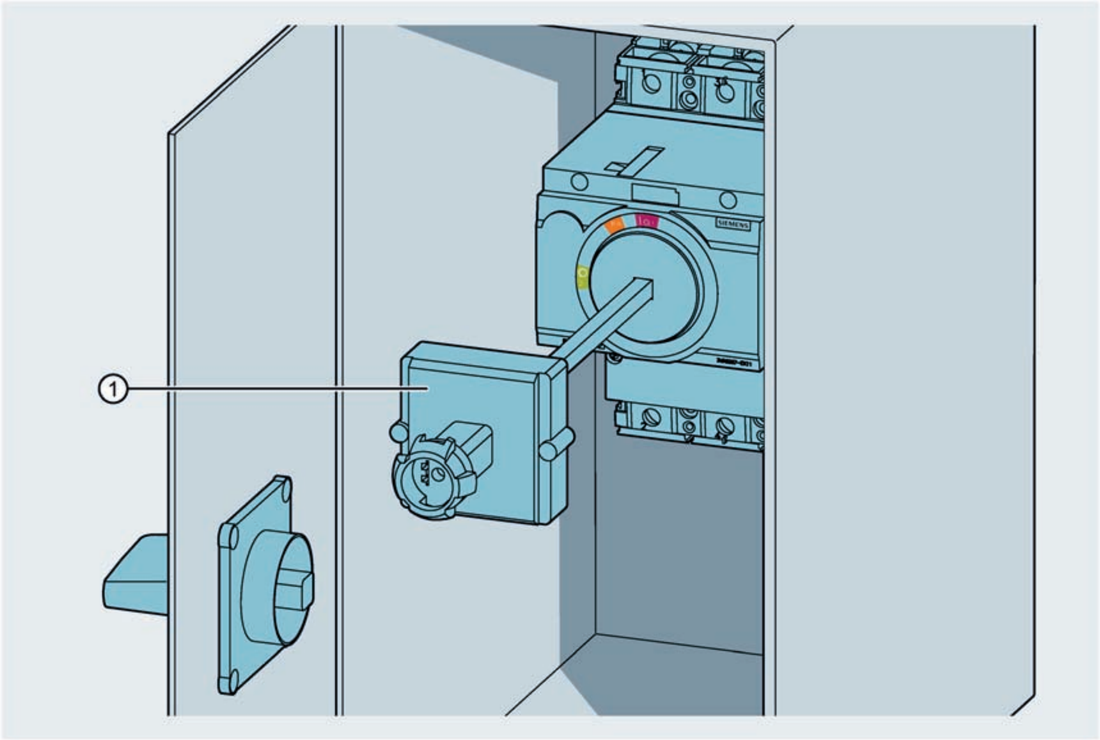

① Tolerance compensator

Offset compensator

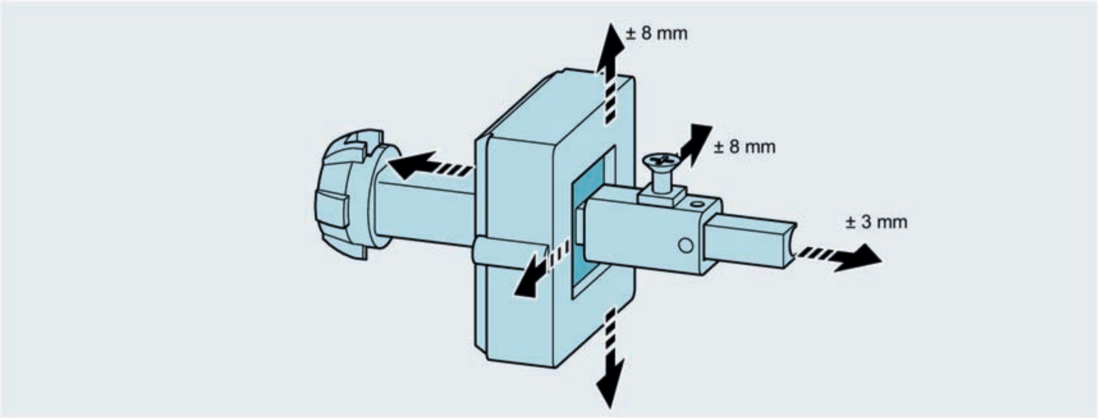

Testing the tripping mechanism

The button <PUSH TO TRIP> can be pressed to perform a function test on the tripping mechanism.

Procedure

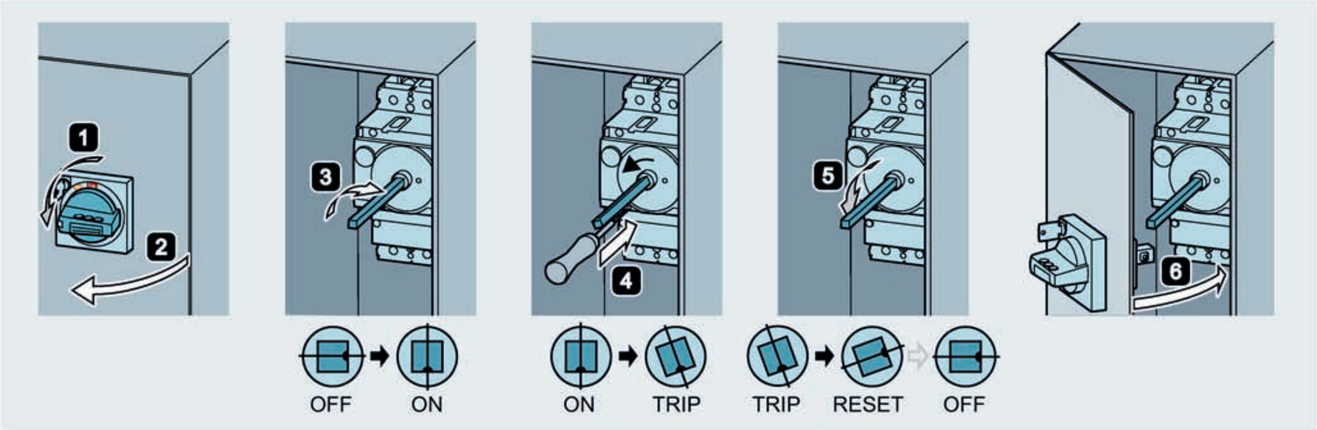

1. Turn the door mounted rotary operator to the OFF (O) position.
2. Open the panel door.
3. Use a tool to turn the shaft to the ON (I) position in order to close the molded case circuit breaker.
   Alternatively, the supplementary handle for the door mounted rotary operator can also be used to close the breaker.
4. Press the button <PUSH TO TRIP> with a tool such as a screwdriver.
   The door mounted rotary operator moves from position ON (I) to position TRIP. The molded case circuit breaker is now in the tripped state.

5. Turn the door mounted rotary operator counter-clockwise to the limit stop (RESET position, just beyond OFF (O)).
   The manual operator remains in the OFF (O) position.
6. Close the panel door.
   The molded case circuit breaker can now be closed again.

Supplementary handle for door mounted rotary operator

The supplementary handle can be used to operate the molded case circuit breaker when the cubicle door is open.

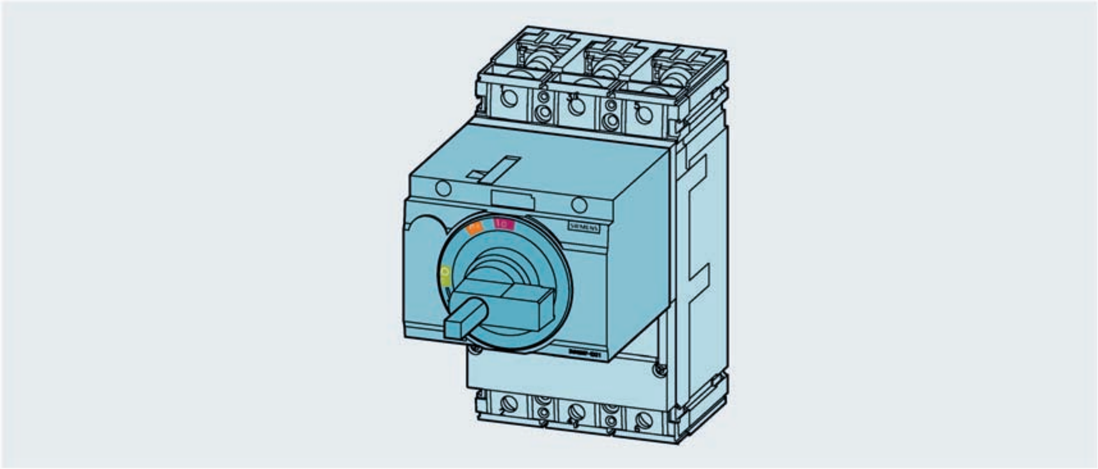

Use the supplementary handle to close the molded case circuit breaker:

A deliberate action is required to turn the molded case circuit breaker to the ON (**I**) position:

1. Push in the supplementary handle.
2. Turn the supplementary handle to the ON (**I**) position in order to close the molded case circuit breaker.

Variable depth adapter

The variable depth adapter enables adjustment of the travel distance Connect - Test - Disconnect when using draw-out technology. As a result, the panel door does not have to be opened in the Connect, Test and Disconnect positions. See also chapter Draw-out technology (Page 285)

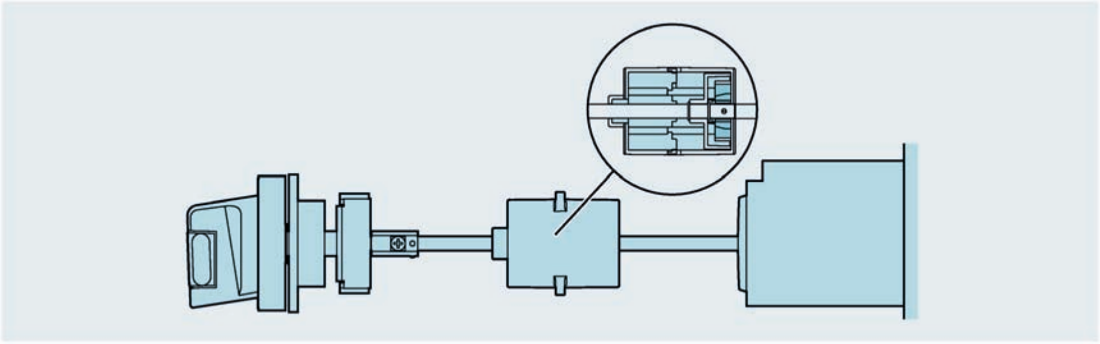

4.5.4 Side wall mounted rotary operator

The side wall mounted rotary operator allows the molded case circuit breaker to be operated through the right-hand or left-hand side wall of the cubicle.

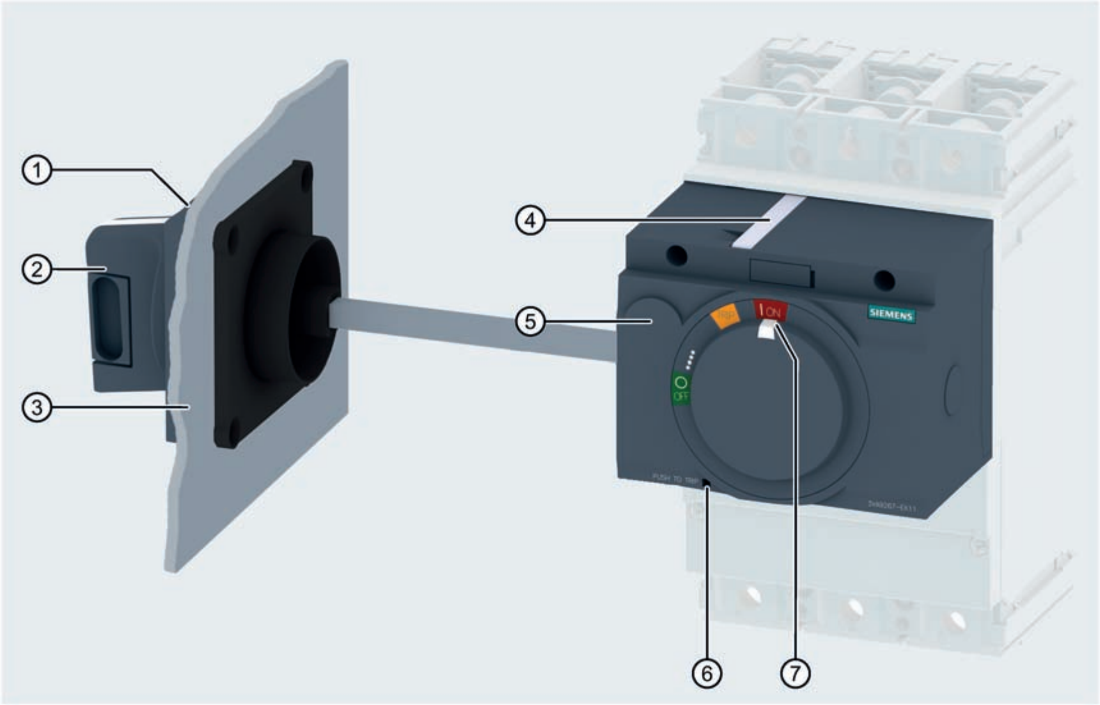

① Side wall mounted rotary operator
② Handle with device for up to 3 padlocks
③ Side wall of cubicle
④ Device for up to 3 padlocks
⑤ Device for cylinder lock
⑥ Trip unit button <PUSH TO TRIP>
⑦ Switching position indicator ON, TRIP, mounting position, OFF, RESET
For mounting position, see chapter Front mounted rotary operator (Page 312)

Side wall mounted rotary operator with mounting plate

The side wall mounted rotary operator is available in a version with mounting plate for molded case circuit breakers up to 250 A. The mounting plate can be installed on the right-hand or left-hand side panel. The space on the mounting plate can be used to install other components.

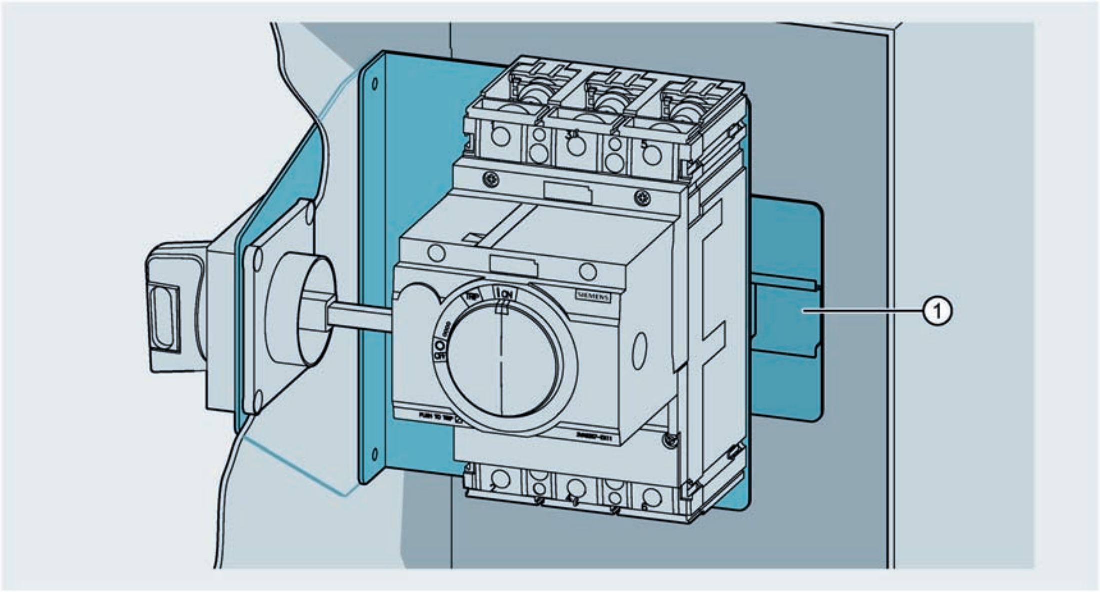

If there is insufficient space available on the mounting plate to install terminals, a terminal plate ① can be bolted to the cubicle.

4.5.5 Locking and interlocking for manual operators

The following accessories for locking, blocking and interlocking are used:

- Locking at the handle
- Locking, blocking and interlocking at the rotary operator

4.5.5.1 Locking by the handle

The following manual operators can be locked by the handle:

- Front mounted rotary operator
- Door mounted rotary operator
- Side wall mounted rotary operator

Up to three padlocks with a shackle diameter of between 5 and 8 mm can be used to lock the rotary operators. Padlocks are not included in the scope of supply.

Front mounted rotary operator

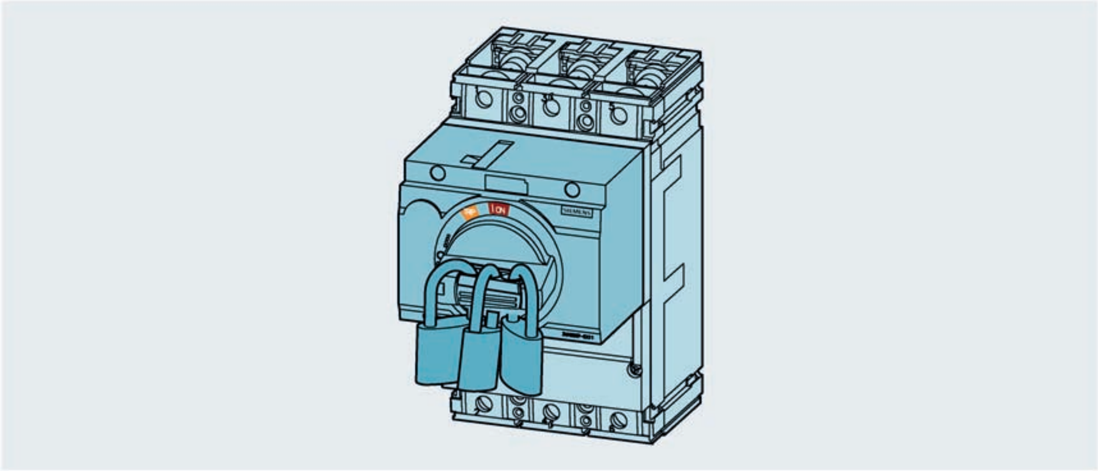

Lockable switching positions:

- Position OFF (O)
- Position ON (I)
  Possible only if the front mounted rotary operator has been modified accordingly during installation.

Door mounted rotary operator and side wall mounted rotary operator

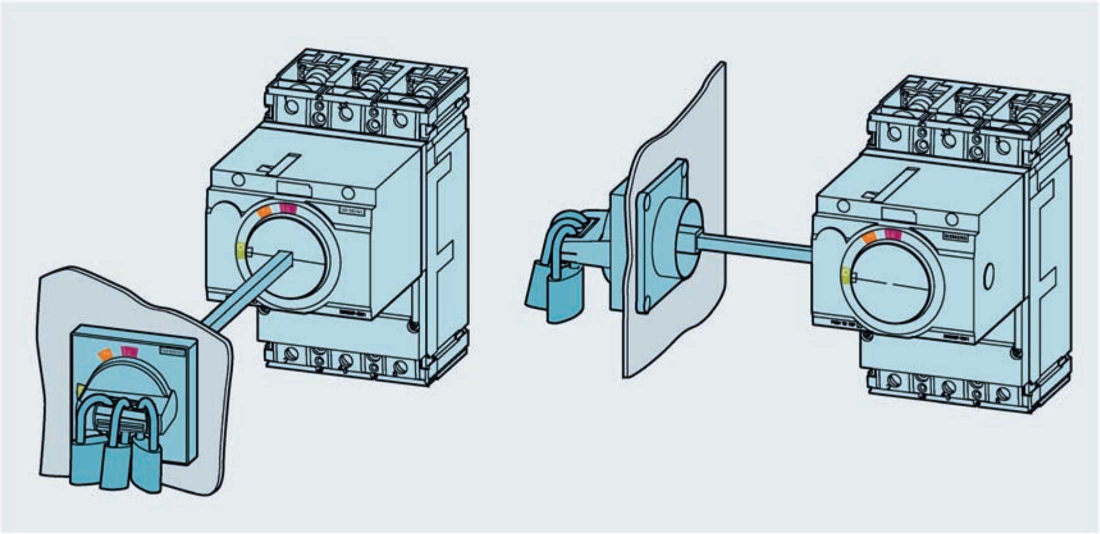

Lockable switching positions:

- Position OFF (O)
  When the door mounted rotary operator or the side wall mounted rotary operator is locked in the OFF (O) position, the molded case circuit breaker cannot be closed, nor can the cubicle door be opened. The door interlock cannot be overridden.
- Position ON (I)
  Possible only if the door mounted rotary operator or the side wall mounted rotary operator has been modified accordingly during installation.

Note

No impairment of protection functions

Locking the rotary operators in the ON (I) position does not impair the protective functionality of the molded case circuit breakers. In the event of a fault, the molded case circuit breaker trips in the normal way.

When the rotary operator is unlocked, the switching position changes to TRIP.

4.5.5.2 Locking and interlocking by the rotary operator

The following manual operators can be locked and interlocked by the rotary operator:

- Front mounted rotary operator
- Rotary operator with shaft stub
- Door mounted rotary operator
- Side wall mounted rotary operator

The manual operators can be locked by up to three padlocks with a shackle diameter of between 5 and 8 mm or by means of cylinder locks (type Ronis). Manual operators can be interlocked only by means of cylinder locks (type Ronis).

In addition, the door mounted rotary operator and side wall mounted rotary operator at the masking plate in the panel door or side panel can also be locked using cylinder locks (type Kaba).

Padlocks and cylinder locks are not included in the scope of supply of manual rotary operators.

Locking with padlocks

All rotary operators are equipped with a padlock locking unit. This locking unit is simply pulled out of the rotary operator.

Example of rotary operator with shaft stub:

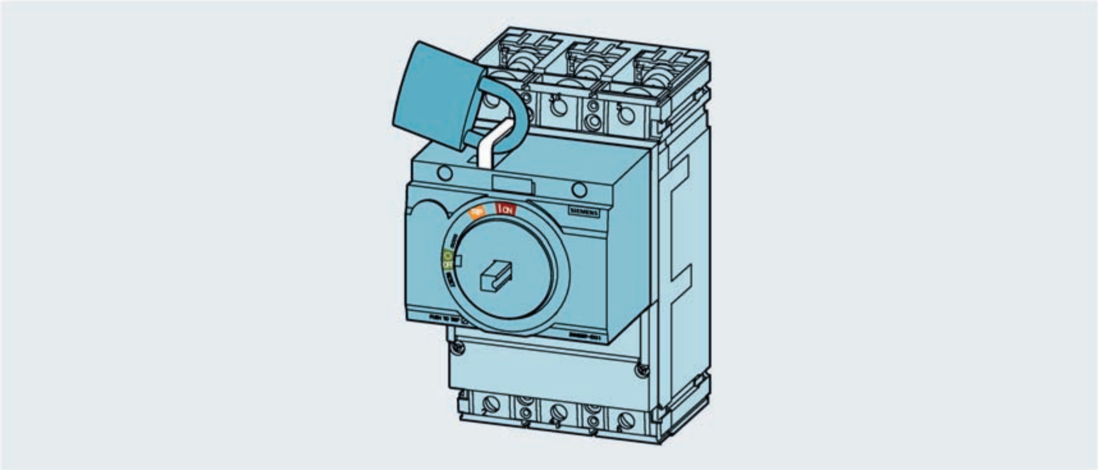

Lockable switching positions:

- Position OFF (O)

Locking or interlocking using a cylinder lock (type Ronis)

Rotary operators can be locked or interlocked (depending on how the lock holder is installed) by means of the cylinder lock (type Ronis).
Example of a front mounted rotary operator and a rotary operator with shaft stub:

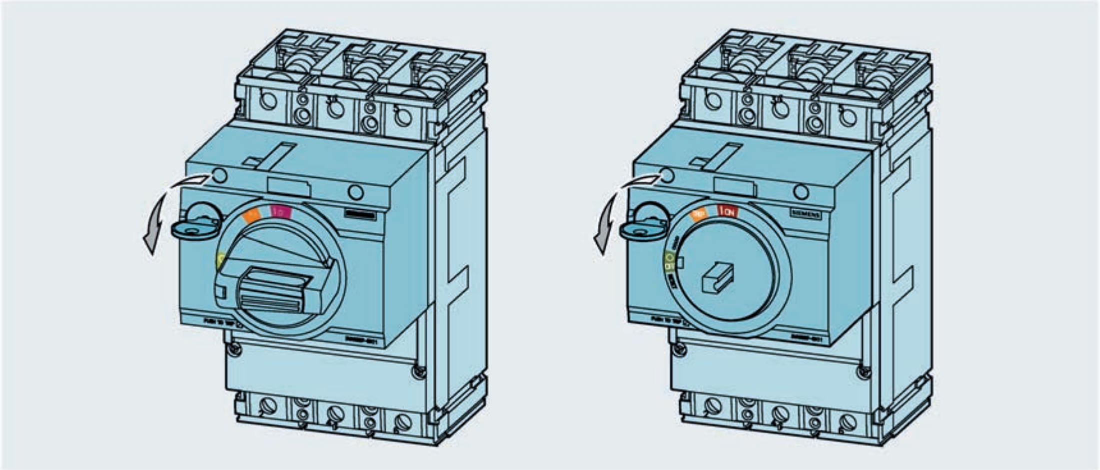

Locking with cylinder lock (type Ronis):

The cylinder lock (type Ronis) locks the rotary operators in the OFF (O) position.

Mutual interlocking with cylinder lock (type Ronis):

By using the cylinder lock insert for interlocking, it is possible to establish a mutual interlock between an unlimited number of rotary operators. This requires that the keys of all molded case circuit breakers locked in the open position are removed from the lock and stored in a safe place. Only the key of the rotary operator which is in the ON (**I**) position is left in the cylinder lock. This key cannot be removed while the rotary operator is in the ON (**I**) position. The key can be removed only after the rotary operator has been turned to the OFF (0) position, the cylinder lock turned to the "locked" position so that the molded case circuit breaker is interlocked. See also chapter Cylinder locks for implementing interlocks between multiple 3VA molded case circuit breakers (Page 369).

Locking with cylinder lock (Kaba)

The door mounted rotary operator and the side wall mounted rotary operator can be locked by means of a cylinder lock (type Kaba) fitted in the panel door or side panel.

The cylinder lock (type Kaba) is not included in the scope of supply.

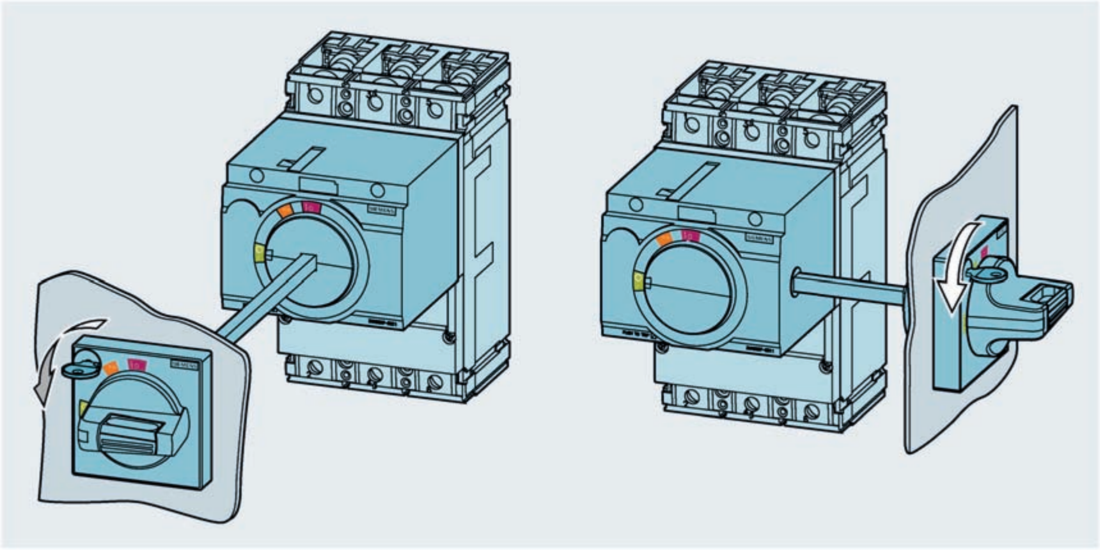

4.5.6 Degree of protection

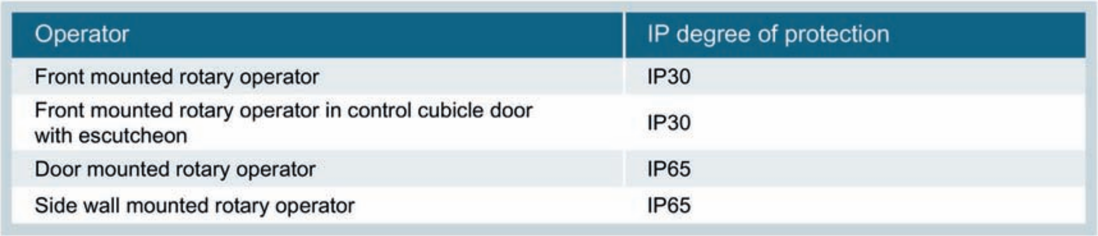

Operator	IP degree of protection
Front mounted rotary operator	IP30
Front mounted rotary operator in control cubicle door with escutcheon	IP30
Door mounted rotary operator	IP65
Side wall mounted rotary operator	IP65

When fitted with an escutcheon (see illustration below), a front mounted rotary operator installed in the cubicle door has degree of protection IP30.

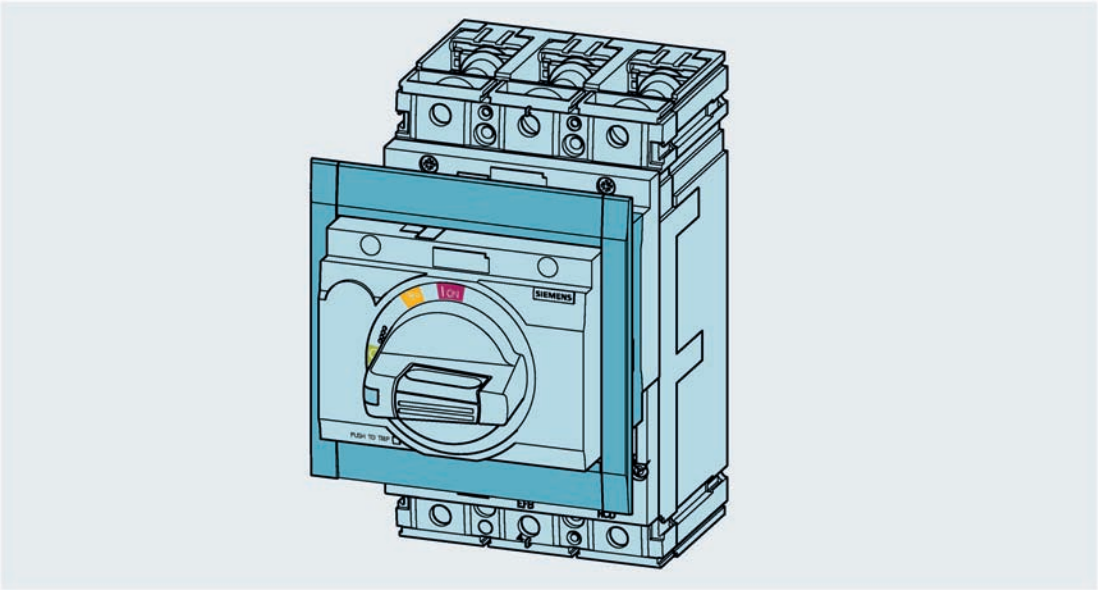

Note

To ensure that the control cabinet door can still be opened, the front mounted rotary operator must not project over the cover frame by more than 5 mm when the door is closed.

4.5.7 Accessories

Illumination kit

With this kit installed, the front edge of the handle of the front mounted operator of the door mounted rotary operator or side wall mounted rotary operator lights up to indicate the switching position of the circuit breaker. The illumination kit can be ordered with the operator as a pre-assembled accessory, or individually as a retrofit component.

The illumination kit operates on a 24 V DC supply.

Its power consumption is 0.16 W.

4.6 Motor operators

4.6.1 MO310 side mounted motor operator

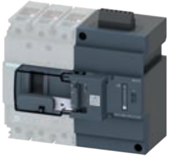

The MO310 side mounted motor operator makes it possible to implement remote control of the 3VA1 molded case circuit breaker without having to attach anything to the front of the circuit breaker. Its compact design (cover size of 45 mm) and the DIN rail mounting option make this MO310 side mounted motor operator especially suitable for:

- Building distribution boards
- Distribution boards

MO310 side mounted motor operators are also used in conjunction with automatic transfer control devices.

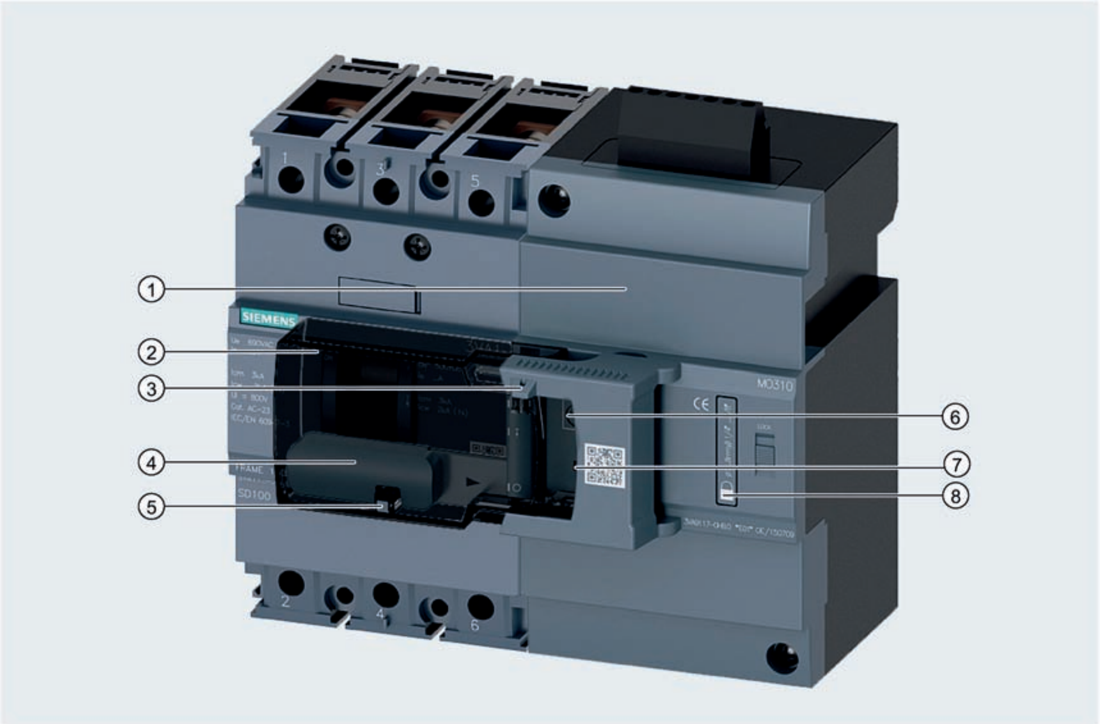

① MO310 motor operator
② Plastic cover
③ Seal
④ Handle for manual operation
⑤ <PUSH TO TRIP> button
⑥ Reset mode setting
⑦ LED "Active"
⑧ Mechanism for padlocks

Description

The switchstick on the front panel clearly shows the switching position of the molded case circuit breaker. The MO310 side mounted motor operator meets the requirements pertaining to isolating features stipulated by IEC / EN 60947-1.

Switchstick on the front panel

Switchstick position	Switching position	Description
|	ON	The main contacts of the molded case circuit breaker are closed.
○	OFF	The main contacts of the molded case circuit breaker are open.
↧	TRIP	The molded case circuit breaker is in the TRIP position. It is not absolutely clear that all main contacts are open.

LED status displays

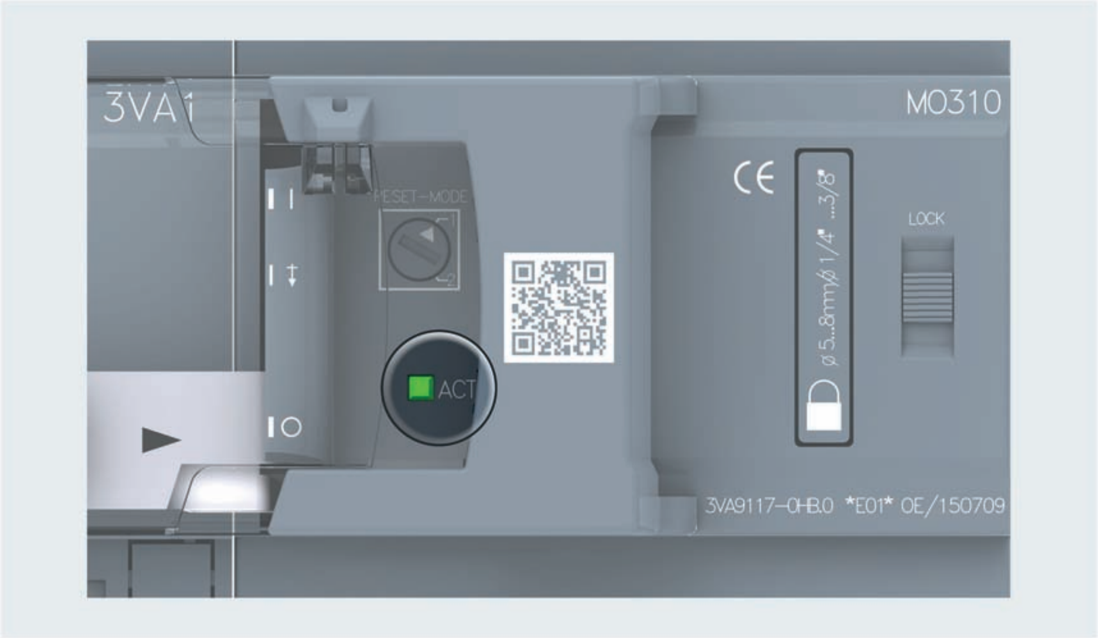

ACT	Status
☐	No power supply
◩	Internal error (flashing frequency ON : OFF = 1 : 1)
◩	Device defective (flashing frequency ON : OFF = 1 :10)
🟩	Normal operating status / Tripped

See also chapter Faults, causes of faults and rectification of faults (Page 338).

4.6.1.1 MANUAL, AUTO and LOCK modes

The MO310 side mounted motor operator is switched to MANUAL or AUTO mode when the plastic cover is opened (MANUAL) or closed (AUTO).

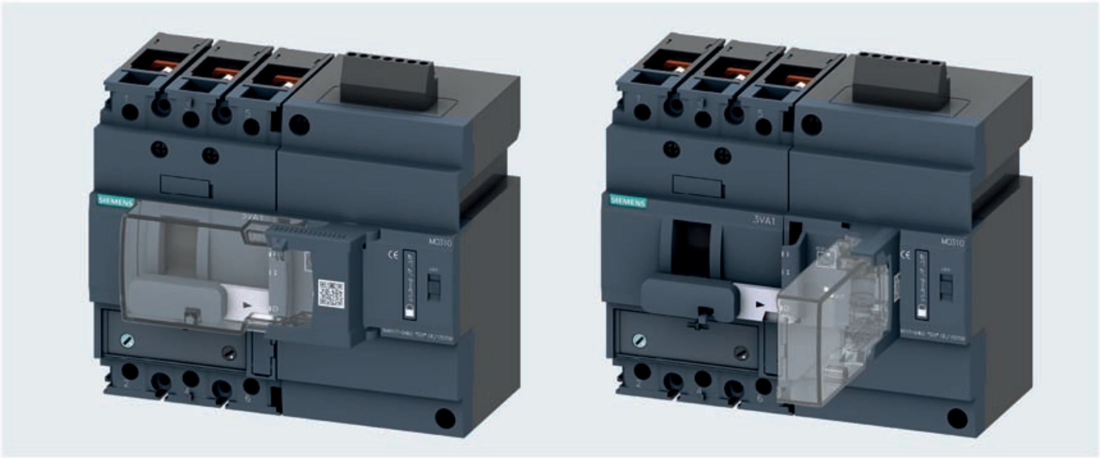

MANUAL:

When the plastic cover is open, the MO310 side mounted motor operator is in MANUAL mode. The switchstick on the front panel can be operated to move the molded case circuit breaker to the ON (I) or OFF (O) position.

AUTO:

If the plastic cover is closed, the MO310 side mounted motor operator is operated via control cables, e.g. via pushbuttons or a PLC.

LOCK:

The MO310 side mounted motor operator can be interlocked to prevent reclosing by operating the locking bar in the OFF (O) position. The locking device can be locked with up to three padlocks (shackle diameter 5.0 mm to 8.0 mm). Padlocks are not included in the scope of supply.

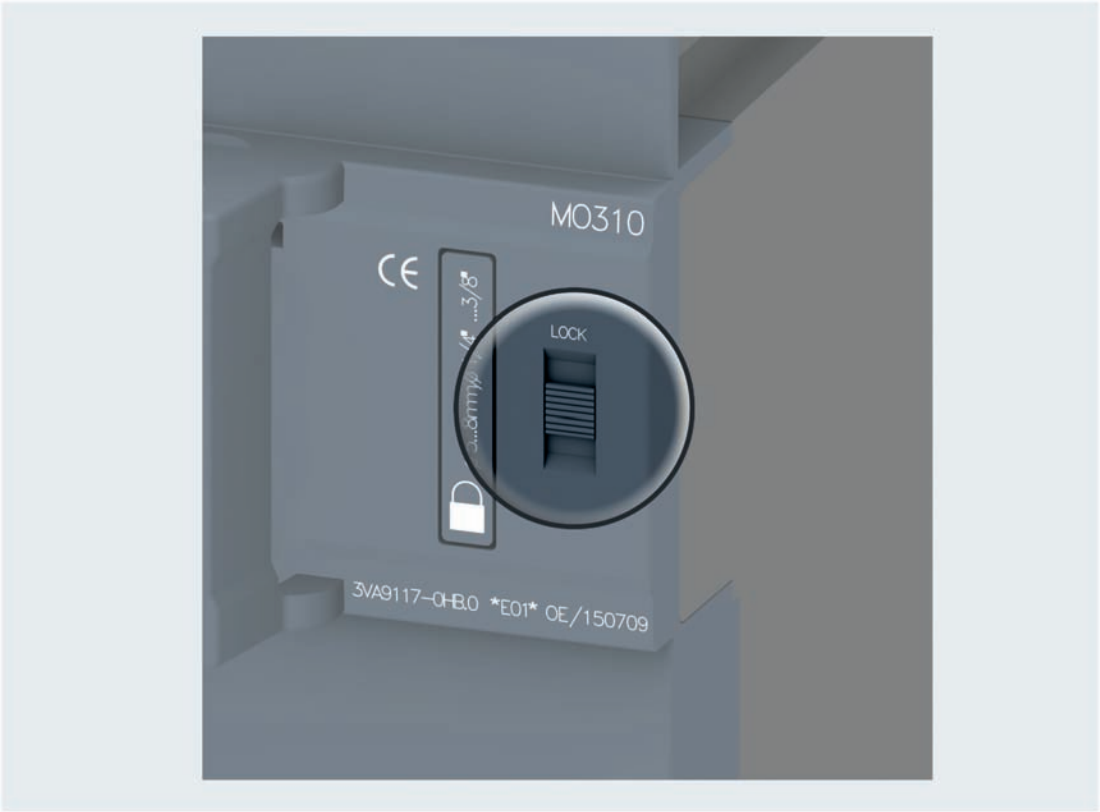

4.6.1.2 Closing, opening and resetting the 3VA molded case circuit breaker

Closing and opening in MANUAL mode

The plastic cover is open. The MO310 side mounted motor operator is in MANUAL mode.

- Close the molded case circuit breaker:
  Push the switchstick to the ON (I) position.

  The molded case circuit breaker is closed ON (I). The contacts are closed.
- Open the molded case circuit breaker:
  Push the switchstick to the OFF (O) position.

  The molded case circuit breaker is open OFF (O). The contacts are open.

Closing and opening in AUTO mode

The plastic cover is closed. The MO310 side mounted motor operator is in AUTO mode. The 3VA molded case circuit breaker can only be closed or opened by means of electrical signals.

- Close the 3VA molded case circuit breaker by means of an electrical ON signal at the terminal block:
  The molded case circuit breaker is ON (I). The contacts are closed. The switchstick is in the ON (I) position.
- Open the 3VA molded case circuit breaker by means of an electrical OFF signal at the terminal block:
  The molded case circuit breaker is OFF (O). The main contacts are separated. The switchstick is in the OFF (O) position.

Resetting the molded case circuit breaker

The method by which the molded case circuit breaker is reset by the MO310 side mounted motor operator depends on the selected reset mode.

Selectable reset mode

The reset mode can be set. After the molded case circuit breaker has tripped, the selected reset mode determines the response of the motor operator in the TRIP position.

Response of MO310 side mounted motor operator to tripping of the molded case circuit breaker, depending on the selected reset mode:

Reset mode	Requirements	Operating mode	Setting Rotary button	Description
Operating mode 1: Automatic reset	Plastic window closed, motor operator is in AUTO position.	AUTO		If the molded case circuit breaker has tripped, the motor operator moves it automatically from position TRIP to position OFF.
Operating mode 2: Manual reset or reset by remote control	Plastic window open or closed, motor operator is in the MANUAL or AUTO position.	MANUAL / AUTO		MANUAL operating mode: The motor operator must be reset locally by means of the handle (switching position OFF (O)). AUTO operating mode: The motor operator must be reset with an OFF signal transferred via control cables (e.g. pushbutton, PLC).

Connection diagram for control of the MO310 motor operator

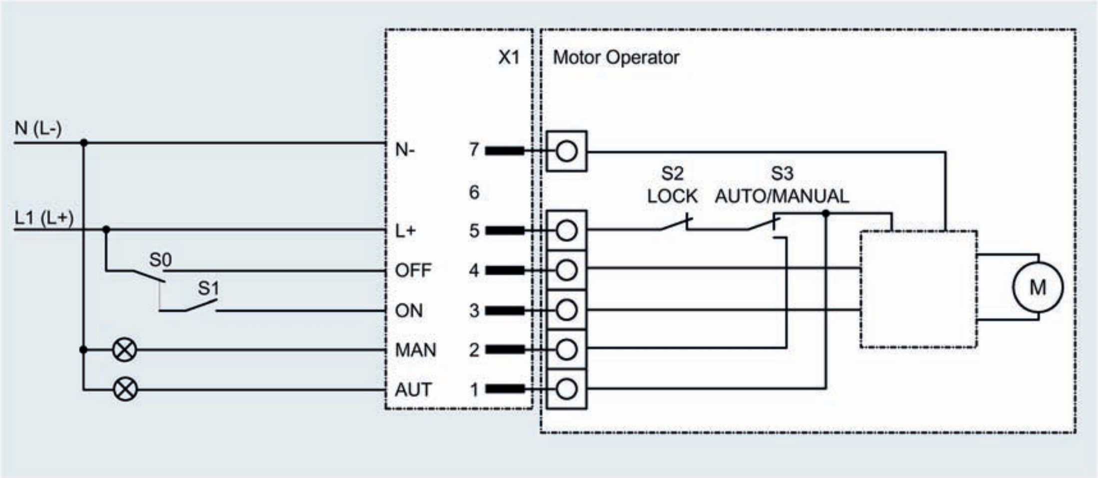

The MO310 motor operator is edge-controlled, i.e. it reacts only to the positive edge of an ON or OFF command at the relevant terminals 3 and 4. In this case, the OFF signal is dominant, i.e. the motor operator will be switched off in response to an OFF edge even if an ON signal is applied.

The MO310 requires a pause period of 80 ms between the end of an OFF signal and the edge of an ON signal. Since the OFF signal is dominant, it does not require a pause period.

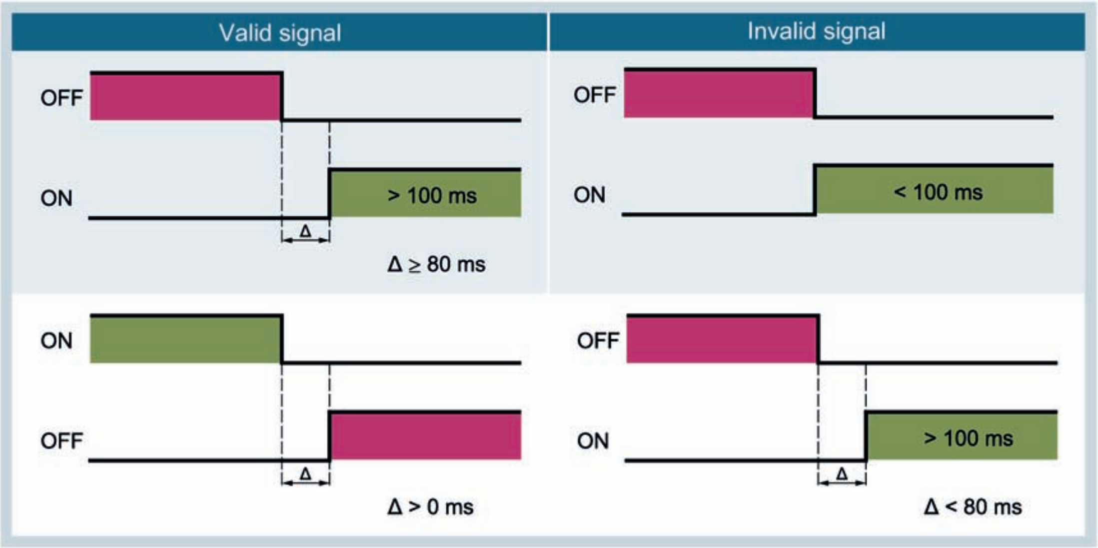

4.6.1.3 Faults, causes of faults and rectification of faults

ACT	Status
☐	No power supply
◪	Internal error (flashing frequency ON : OFF = 1 : 1)
◪	Device defective (flashing frequency ON : OFF = 1 : 10)
🟩	Normal operating status / Tripped

Device defective and internal fault:

- "Device defective" refers to a fault or defect in the motor operator which cannot be rectified. The device must be replaced. This can be caused by a defective microswitch, for example.
- "Internal error" refers to faults which can be rectified (e.g. an undefined switching position, fault during automatic RESET, excessively long switching times). If the motor operator fault condition cannot be rectified by switching it ON/OFF again, the switching position must be corrected manually.

Note

You must first ensure that the rotary switch for RESET mode is in a defined state.

4.6.2 Motor operator MO320

The motor operator MO320 transmits commands via electrical control cables to open and close the molded case circuit breaker. The source of commands transmitted via electrical control cables can be a pushbutton or a PLC, for example.

Motor operators must also used in conjunction with automatic transfer control devices.

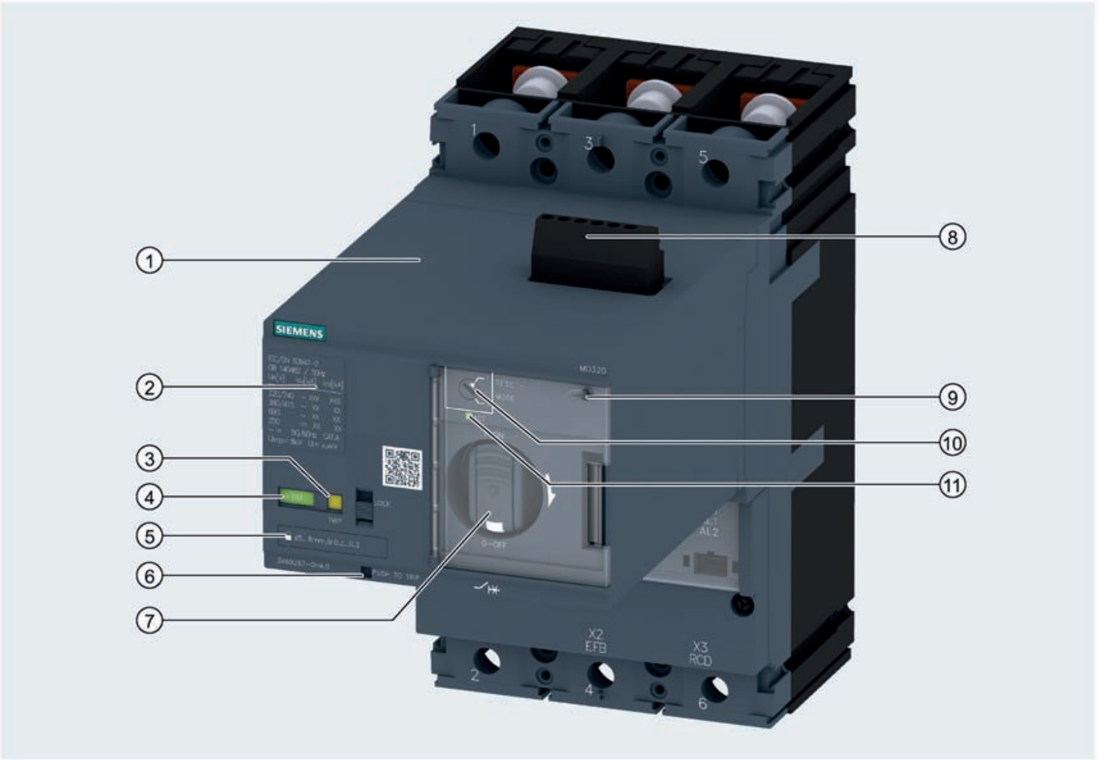

① MO320 motor operator
② Characteristic data of the molded case circuit breaker
③ LED "TRIP"
④ Indication of the breaker status ON/OFF
⑤ Mechanism for padlocks
⑥ Button for trip unit <PUSH TO TRIP>
⑦ Handle for manual operation
⑧ Connecting terminals for power supply (AC/DC depending on version)
⑨ Seal
⑩ Reset mode setting
⑪ LED "Active"

Description of front panel

The front panel of the motor operator MO320 features an indication of the breaker status and an LED labeled "TRIP". The indication directly reflects the status of the actuating shaft. With its clear breaker status indication, the motor operator MO320 meets the requirements pertaining to isolating features stipulated by IEC / EN 60947-1.

Indication of the breaker status on the front panel

🟥 I ON	ON	The main contacts of the molded case circuit breaker are closed.
🟩 O OFF	OFF	The main contacts of the molded case circuit breaker are open.
🟩 O OFF 🟨	Off and LED TRIP lit	The molded case circuit breaker is in TRIP position.

LED status displays

ACT	TRIP	Status
☐	☐	No power supply
▨	☐	Internal error
🟩	☐	Normal operating status
🟩	🟨	Tripped if TRIP LED is illuminated
▨	▨	Device defective

See also chapter Faults, causes of faults and rectification of faults (Page 346).

4.6.2.1 MANUAL, AUTO and LOCK modes

The motor operator MO320 is switched to MANUAL or AUTO mode when the plastic window is opened (MANUAL) or closed (AUTO).

MANUAL:

When the plastic window is open, the motor operator MO320 is in MANUAL mode. The motor operator is moved to position ON (I) or OFF (O) by manual operation of the handle.

AUTO:

When the plastic window is closed, the motor operator MO320 is in AUTO mode. The motor operator can be operated via control cables, e.g. in response to signals issued by a pushbutton or by control commands output by a PLC.

LOCK:

The motor operator can be locked in the OFF (O) position to prevent reclosure of the breaker. The padlock locking device snaps out if the slide above it is moved to the "LOCK" position.

Up to three padlocks with a shackle diameter of between 5 and 8 mm can be inserted through the openings in the padlock locking unit. Padlocks are not included in the scope of supply.

4.6.2.2 Opening, closing and resetting the 3VA molded case circuit breaker

Closing and opening in MANUAL mode

The plastic window is open, the motor operator is in MANUAL mode. The supply to the LEDs is also disconnected, but the motor operator remains fully operational.

- Close the 3VA molded case circuit breaker:
  Turn the handle clockwise until the breaker status indicator displays ON (I).
  The molded case circuit breaker is now ON (I). The contacts are closed.

- Open the 3VA molded case circuit breaker:
  Turn the handle clockwise until the breaker status indication indicates OFF (O).
  The molded case circuit breaker is now OFF (O). The contacts are open.

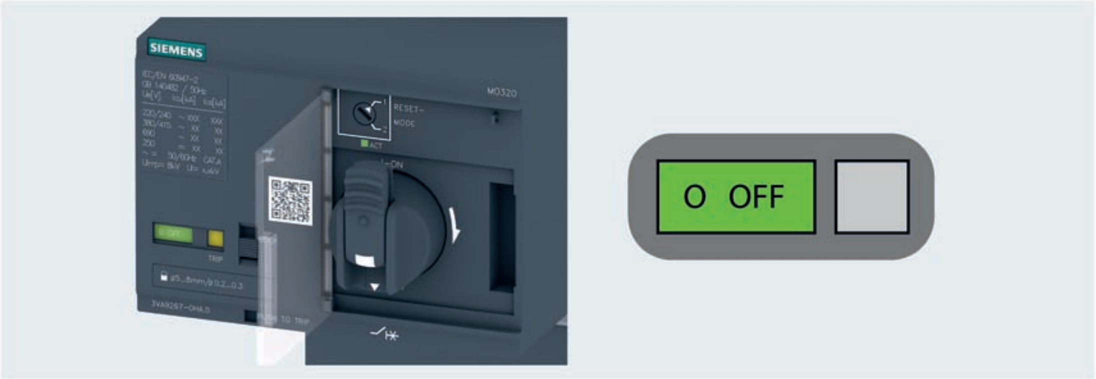

Closing and opening in AUTO mode

The plastic window is closed, the motor operator is in AUTO mode. The 3VA molded case circuit breaker can only be closed or opened by means of electrical signals.

- Close the 3VA molded case circuit breaker by means of an electrical ON signal at the terminal block:
  The molded case circuit breaker is ON (I). The contacts are closed. The switching position indicator on the front panel of the motor operator displays ON (I).
- Open the 3VA molded case circuit breaker by means of an electrical OFF signal at the terminal block:
  The molded case circuit breaker is OFF (O). The main contacts are separated. The switching position indicator on the front panel of the motor operator displays OFF (O).

Resetting the molded case circuit breaker

If the 3VA molded case circuit breaker has tripped, the LED labeled "TRIP" lights up

① Reset mode setting

The method by which the 3VA molded case circuit breaker is reset by the motor operator depends on the selected reset mode.

Reset modes

The reset mode can be set. After the molded case circuit breaker has tripped, the selected reset mode determines the response of the motor operator in the TRIP position.

Motor operator response to tripping of the 3VA molded case circuit breaker depending on the reset mode selection:

Reset mode	Requirements	Operating mode	Setting Rotary button	Description
Operating mode 1: Automatic reset	Plastic window closed, motor operator is in AUTO position.	AUTO		If the molded case circuit breaker has tripped, the motor operator moves it automatically from position TRIP to position OFF.
Operating mode 2: Manual reset or reset by remote control	Plastic window open or closed, motor operator is in the MANUAL or AUTO position.	MANUAL / AUTO		MANUAL operating mode: The motor operator must be reset locally by means of the handle (switching position OFF (O)). AUTO operating mode: The motor operator must be reset with an OFF signal transferred via control cables (e.g. pushbutton, PLC).

Connection diagram for control of the motor operator MO320

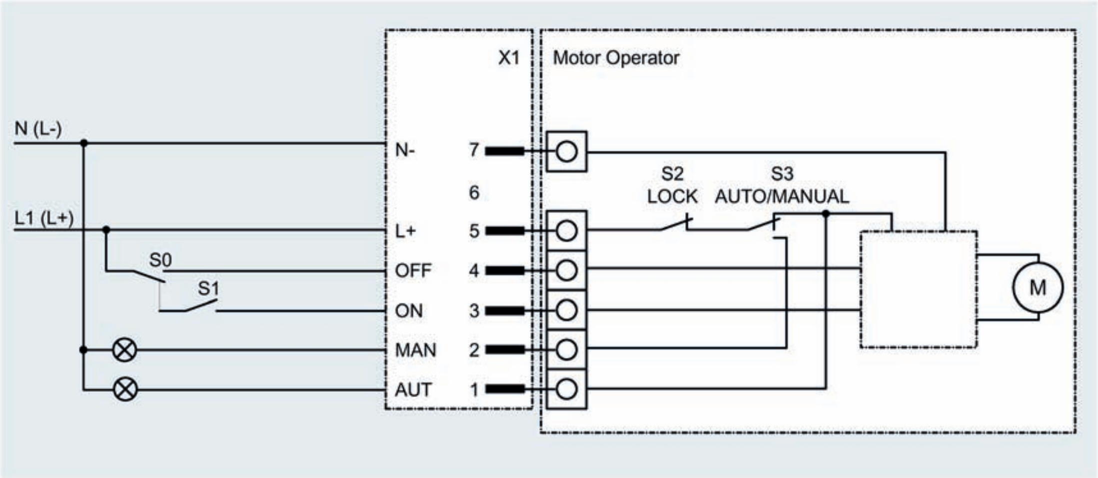

Note

An EMERGENCY-OFF circuit is implemented by means of undervoltage releases (Page 191).

For further circuit diagrams, see chapter "Circuit diagrams" (Page 539).

The MO320 motor operator is edge-controlled, i.e. it reacts only to the positive edge of an ON or OFF command at the relevant terminals 3 and 4. In this case, the OFF signal is dominant, i.e. the motor operator will be switched off in response to an OFF edge even if an ON signal is applied.

The MO320 requires a pause period of 80 ms between the end of an OFF signal and the edge of an ON signal. Since the OFF signal is dominant, it does not require a pause period.

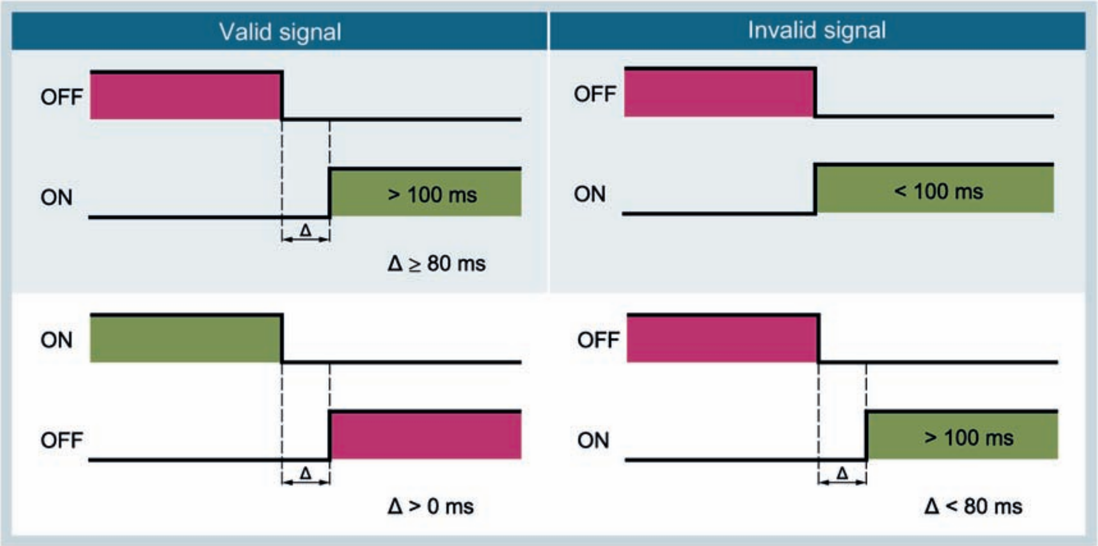

4.6.2.3 Faults, causes of faults and rectification of faults

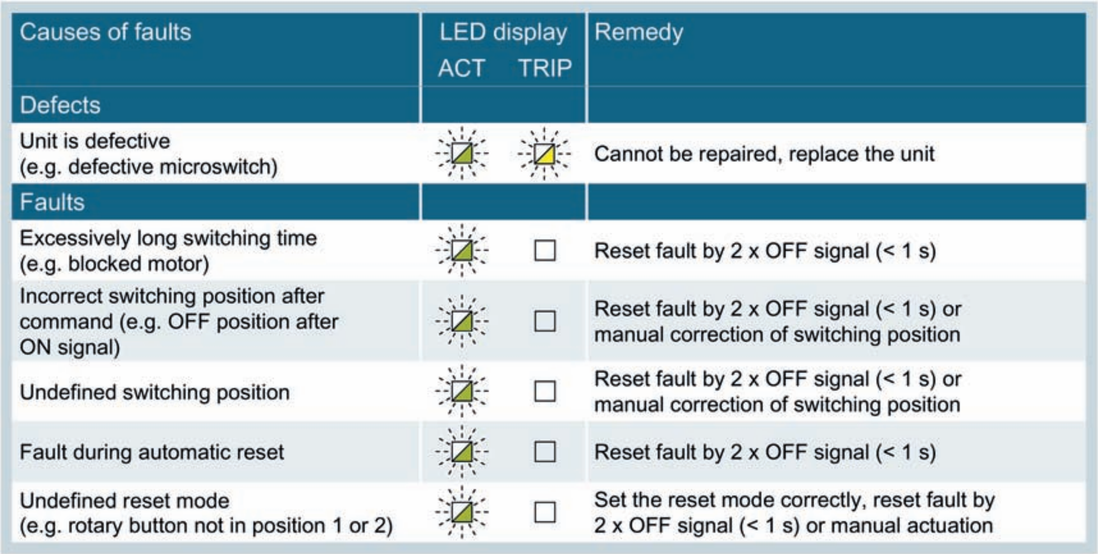

Causes of faults	LED display		Remedy
	ACT	TRIP	
Defects			
Unit is defective (e.g. defective microswitch)	☼	☼	Cannot be repaired, replace the unit
Faults			
Excessively long switching time (e.g. blocked motor)	☼	☐	Reset fault by 2 x OFF signal (< 1 s)
Incorrect switching position after command (e.g. OFF position after ON signal)	☼	☐	Reset fault by 2 x OFF signal (< 1 s) or manual correction of switching position
Undefined switching position	☼	☐	Reset fault by 2 x OFF signal (< 1 s) or manual correction of switching position
Fault during automatic reset	☼	☐	Reset fault by 2 x OFF signal (< 1 s)
Undefined reset mode (e.g. rotary button not in position 1 or 2)	☼	☐	Set the reset mode correctly, reset fault by 2 x OFF signal (< 1 s) or manual actuation

4.6.3 SEO520 motor operator with stored energy operator

The front motor operator with SEO520 stored energy operator is primarily designed for network synchronization applications on account of its fast switching times. It also offers the option of a communication link which allows the 3VA2 molded case circuit breaker to be remotely controlled in fieldbus systems associated with the 3VA range.

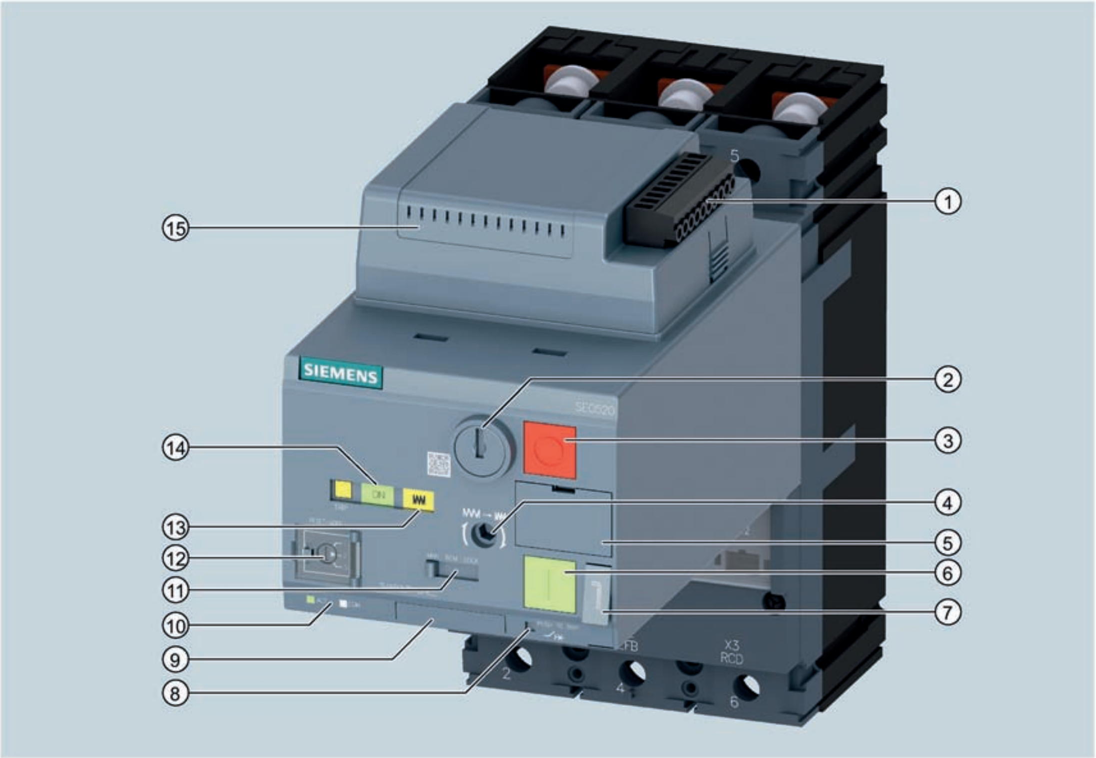

① Connecting terminals
② Cylinder lock installation option (type Ronis) for mode interlocking
③ OFF button
④ Tool insertion slot for manually winding up the stored energy operator
⑤ Installation option for mechanical operating cycles counter
⑥ ON button
⑦ Slot for storing tool for manual wind-up
⑧ <PUSH TO TRIP> test button
⑨ Locking device for padlocks
⑩ Active and Communication LEDs
⑪ Mode slide switch
⑫ Reset mode selector switch
⑬ Indication of status of stored energy operator
⑭ Indication of the breaker status (ON/OFF)
⑮ Power supply top unit (24 V DC, 42 - 60 V AC/DC, 110 - 230 V AC/DC)

Description of front panel

The front panel of the motor operator with SEO520 stored energy operator features an indication of the breaker status and an LED labeled "TRIP". The clear breaker status indication allows the SEO520 motor operator to meet the requirement pertaining to isolating features stipulated by IEC / EN 60947-1.

Indication of the breaker status on the front panel

🟥 I ON	ON	The main contacts of the molded case circuit breaker are closed.
🟩 O OFF	OFF	The main contacts of the molded case circuit breaker are open.
🟩 O OFF 🟨	Off and LED TRIP light up	The molded case circuit breaker is in TRIP position. It is not absolutely certain that all main contacts are open.

LED status displays

ACT	TRIP	Status
☐	☐	No power supply
◩	☐	Internal error
🟩	☐	Normal operating status
🟩	🟨	Tripped if TRIP LED is illuminated
◩	◩	Device defective

Stored energy operator status display

Spring status		Meaning
●●●●		Installation position (OFF spring discharged, ON spring charged)
0 OFF		Both springs charged – SEO520 motor operator ready
I ON		SEO520 motor operator at ON, ON spring discharged, OFF spring still charged
0 OFF		SEO520 motor operator at OFF, both springs discharged – charging is automatic (4 - 5 s, with supply voltage) or manual (without supply voltage)

4.6.3.1 MANUAL, AUTO and LOCK modes

The SEO520 motor operator with stored energy operator features the operating modes

- MANUAL (manual mode)
- AUTO (remote control mode)
- LOCK (locked)

These are selected using a slide switch on the front of the SEO.

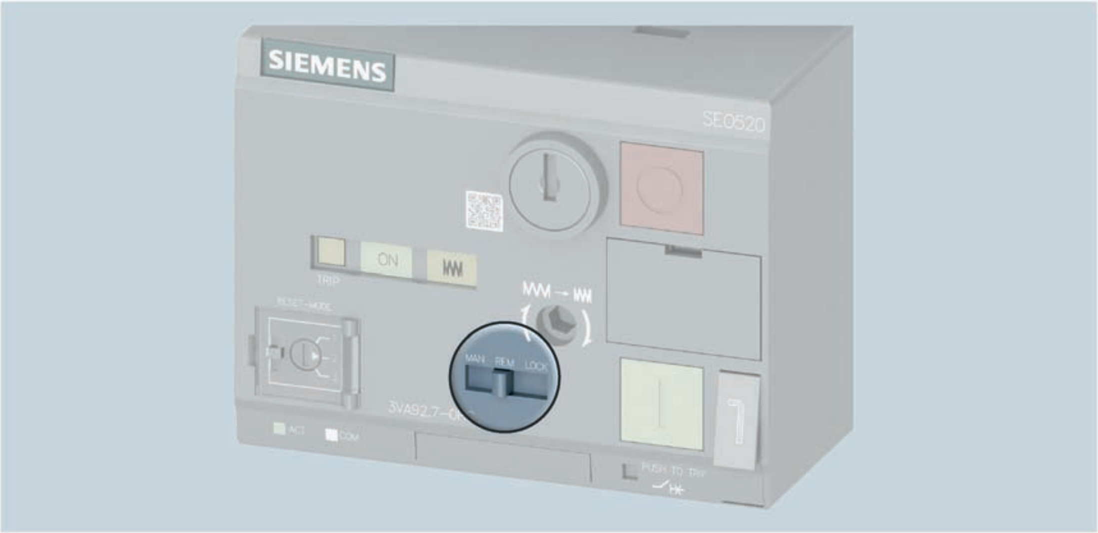

MANUAL

In MANUAL mode (slide switch on the left), the SEO520 motor operator can only be operated using the buttons on the front panel of the SEO520 motor operator.

AUTO

In AUTO mode (slide switch in the middle), the SEO520 motor operator is operated via control cables, e.g. via pushbuttons or a PLC, or via the optional communication function.

LOCK

In LOCK mode (slide switch on the right, only possible in the OFF (O) position), the SEO520 motor operator can be interlocked to prevent reclosing. The locking device can be locked with up to three padlocks (shackle diameter 5.0 mm to 8.0 mm).

Padlocks are not included in the scope of supply.

4.6.3.2 Closing, opening and resetting the 3VA molded case circuit breaker

Closing and opening

In MANUAL mode

In MANUAL mode, the molded case circuit breaker is operated using the buttons on the front panel of the SEO520 motor operator. Remote control is not possible.

Operating the ON (I) button causes the contacts of the molded case circuit breaker to close. Operating the OFF (O) button causes the contacts to open. This is not performed by means of a TRIP. It is an actual switch-off operation.

In AUTO mode

In AUTO mode, the molded case circuit breaker can be closed and opened by means of electrical signals at the terminal block.

Versions with the communication module can be closed and opened via the connection to the COM060 communication module in the molded case circuit breaker. This takes place via the communication environment selected for the 3VA2 molded case circuit breaker, e.g. PROFIBUS, PROFINET, Ethernet (Modbus TCP). ON/OFF commands can also be issued via the powerconfig commissioning and parameterization software. Here too, an actual switch-off operation is performed and not a TRIP.

In AUTO mode, the OFF (O) button on the SEO520 operator can be used. The ON (I) button cannot be operated.

Resetting the molded case circuit breaker

The method by which the molded case circuit breaker is reset by the SEO520 motor operator depends on the selected reset mode.

Selectable reset mode

The reset mode can be set. After the molded case circuit breaker has tripped, the selected reset mode determines the response of the motor operator in the TRIP position.

Response of SEO520 motor operator to tripping of the molded case circuit breaker, depending on the selected reset mode:

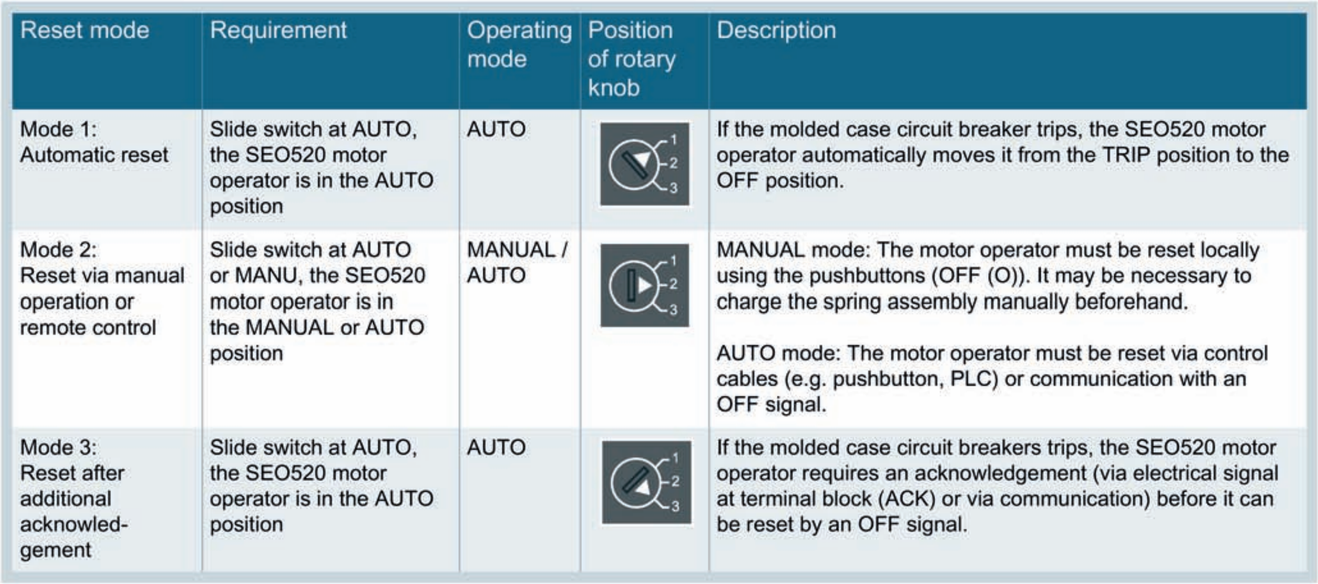

Reset mode	Requirement	Operating mode	Position of rotary knob	Description
Mode 1: Automatic reset	Slide switch at AUTO, the SEO520 motor operator is in the AUTO position	AUTO	1 2 3	If the molded case circuit breaker trips, the SEO520 motor operator automatically moves it from the TRIP position to the OFF position.
Mode 2: Reset via manual operation or remote control	Slide switch at AUTO or MANU, the SEO520 motor operator is in the MANUAL or AUTO position	MANUAL / AUTO	1 2 3	MANUAL mode: The motor operator must be reset locally using the pushbuttons (OFF (O)). It may be necessary to charge the spring assembly manually beforehand. AUTO mode: The motor operator must be reset via control cables (e.g. pushbutton, PLC) or communication with an OFF signal.
Mode 3: Reset after additional acknowled-gement	Slide switch at AUTO, the SEO520 motor operator is in the AUTO position	AUTO	1 2 3	If the molded case circuit breakers trips, the SEO520 motor operator requires an acknowledgement (via electrical signal at terminal block (ACK) or via communication) before it can be reset by an OFF signal.

Connection diagram for control of the SEO520 motor operator

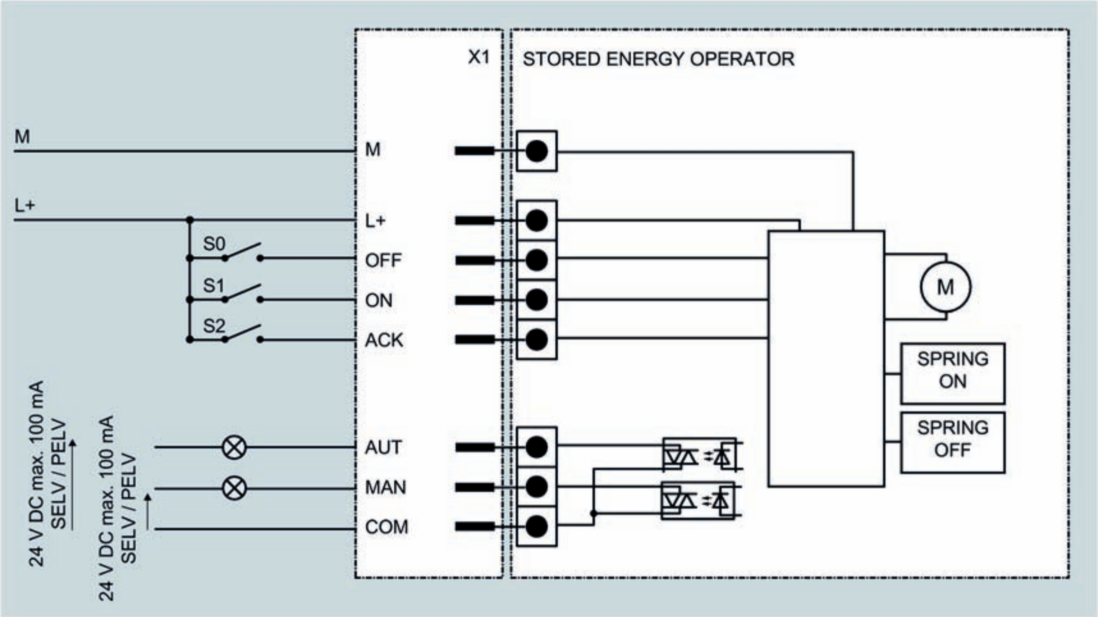

The SEO520 motor operator is edge-controlled, i.e. it reacts only to the positive edge of an ON or OFF command at the relevant terminals 3 and 4. In this case, the OFF signal is dominant, i.e. the motor operator will be switched off in response to an OFF edge even if an ON signal is applied.

The SEO520 requires a pause period of 80 ms between the end of an OFF signal and the edge of an ON signal. Since the OFF signal is dominant, it does not require a pause period.

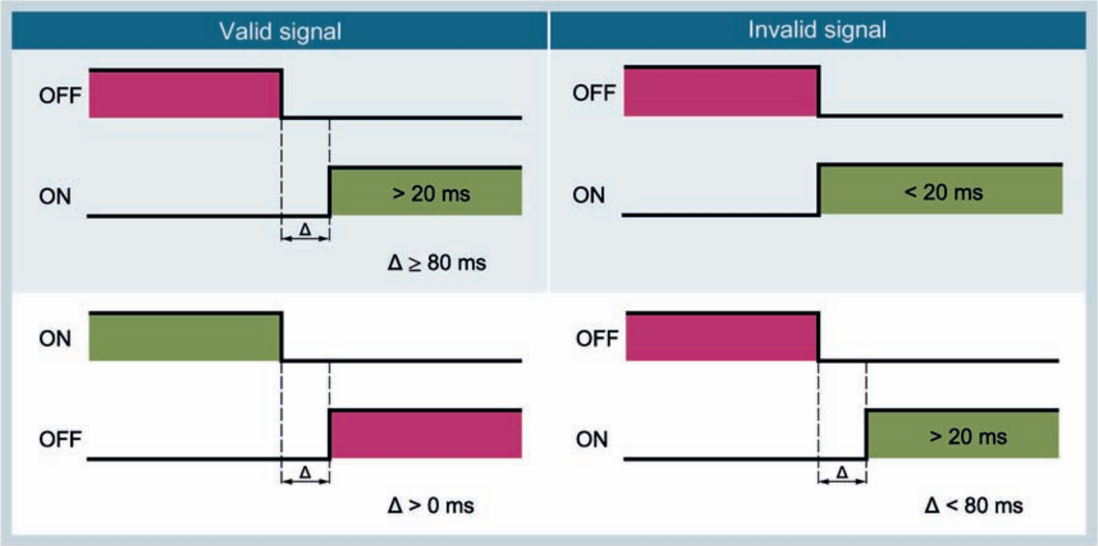

4.6.3.3 Faults, causes of faults and rectification of faults

"Device defective" refers to a fault or defect in the motor operator which cannot be rectified. The device must be replaced. This can be caused by a defective microswitch, for example.

"Internal error" refers to faults which can be rectified (e.g. an undefined switching position, fault on automatic RESET, excessively long switching times). If the motor operator fault condition cannot be rectified by (remotely) switching it ON/OFF again, the following actions are necessary:

- Ensure that the rotary switch for RESET mode is in a defined state (1, 2 or 3)
- Correct the switching position manually (manually charge the stored energy and operate the ON/OFF button).

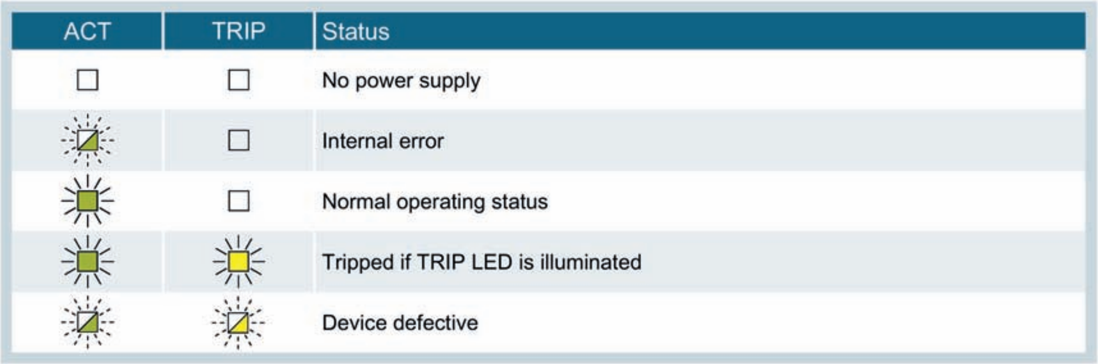

ACT	TRIP	Status
☐	☐	No power supply
◩	☐	Internal error
🟩	☐	Normal operating status
🟩	🟨	Tripped if TRIP LED is illuminated
◩	◩	Device defective

4.6.3.4 Communication

A communication-capable version of the SEO520 motor operator can be ordered as an option. This integrates it in the 3VA communication environment and makes it possible to remotely control the molded case circuit breaker. The signal transmission takes place via an SEO-COM adapter to the COM060 communication module in the right-hand accessory compartment of the molded case circuit breaker.

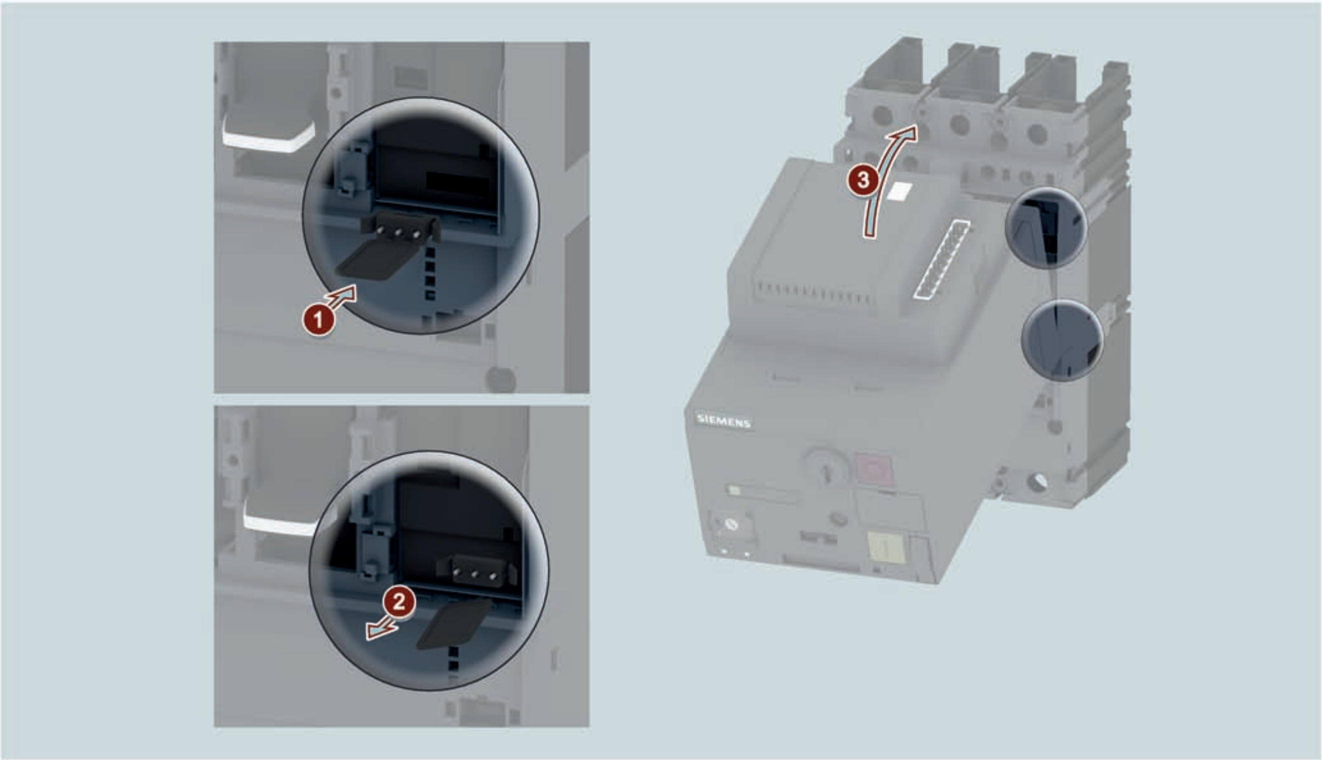

1. Insert the COM060 communication module and the SEO-COM adapter in the molded case circuit breaker.
2. Break off the assembly support of the SEO-COM adapter.
3. Fit the SEO520 in the mounting position.
   The communication connection is established automatically when the COM060 is connected to COM800/100, thereby contacting the 24 V DC.

4.6.3.5 Accessories

Cylinder lock (type Ronis)

The SEO520 motor operator can be fitted with a cylinder lock (type Ronis) at the front. The lock kit comprises a cylinder lock with four possible key versions and the SEO-specific lock insert. The cylinder lock interlocks the selected operating mode (MANUAL, AUTO, LOCK) to prevent any unauthorized change of operating mode.

Operating cycles counter

The mechanical operating cycle counter can be installed at the front. It counts the number of ON/OFF cycles from the time it is installed.

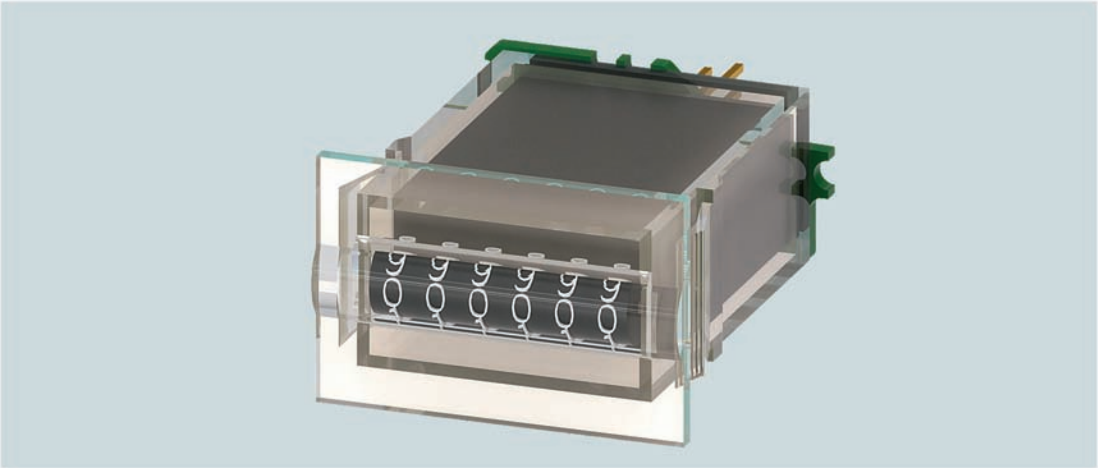

Compatibility with other accessories

⚠ CAUTION

Irreparable damage to the molded case circuit breaker

If the SEO520 motor operator is equipped with a communication option, the use of auxiliary (AUX) switches is **not** permitted in the HP version (3VA9988-0AA11) due to requirements pertaining to air and creepage distances in the right-hand accessory compartment of the molded case circuit breaker.

This warning notice is relevant for cases where an SEO520 motor operator with a communication option is used in an application without communication. If the SEO520 motor operator is connected to a communication system, the COM060 communication module occupies the mounting location of the auxiliary (AUX) switch in the HP version in the right-hand accessory compartment.

4.6.4 Technical specifications

MO310 motor operator

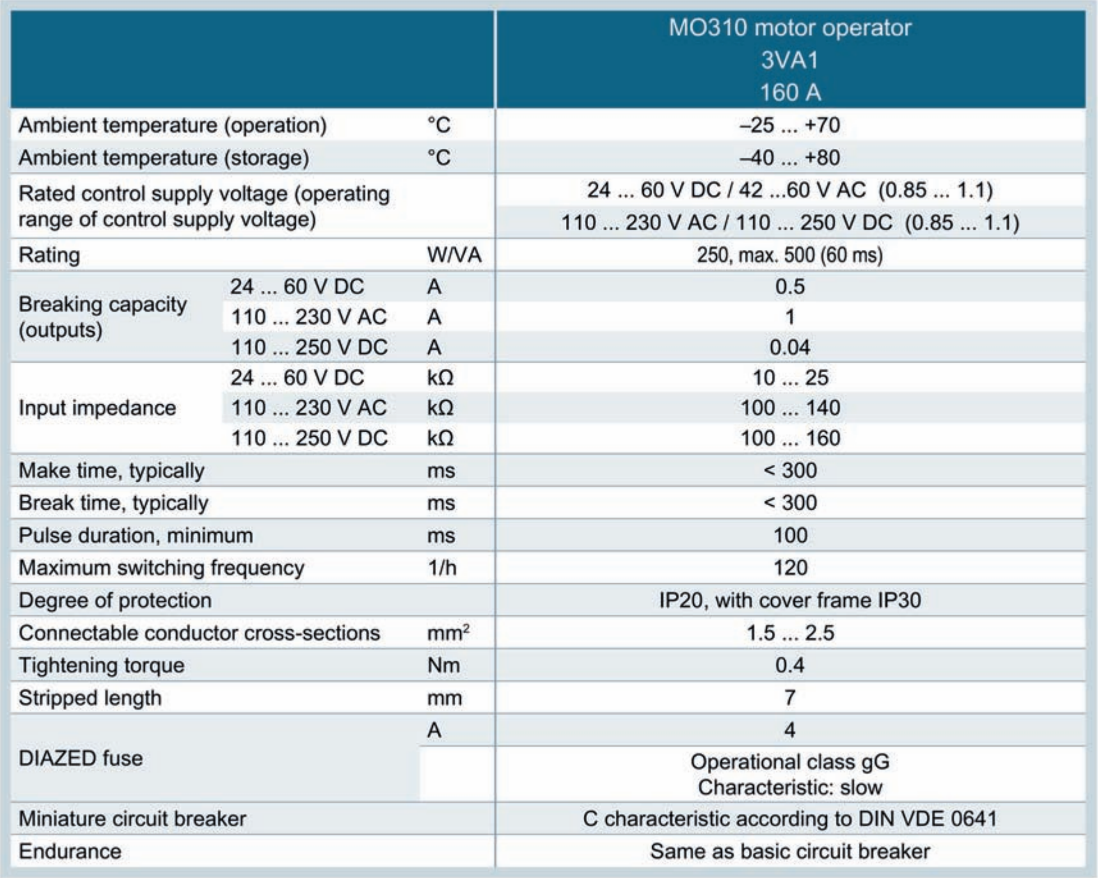

			MO310 motor operator 3VA1 160 A
Ambient temperature (operation)		°C	–25 ... +70
Ambient temperature (storage)		°C	–40 ... +80
Rated control supply voltage (operating range of control supply voltage)			24 ... 60 V DC / 42 ...60 V AC (0.85 ... 1.1)
			110 ... 230 V AC / 110 ... 250 V DC (0.85 ... 1.1)
Rating		W/VA	250, max. 500 (60 ms)
Breaking capacity (outputs)	24 ... 60 V DC	A	0.5
	110 ... 230 V AC	A	1
	110 ... 250 V DC	A	0.04
Input impedance	24 ... 60 V DC	kΩ	10 ... 25
	110 ... 230 V AC	kΩ	100 ... 140
	110 ... 250 V DC	kΩ	100 ... 160
Make time, typically		ms	< 300
Break time, typically		ms	< 300
Pulse duration, minimum		ms	100
Maximum switching frequency		1/h	120
Degree of protection			IP20, with cover frame IP30
Connectable conductor cross-sections		mm²	1.5 ... 2.5
Tightening torque		Nm	0.4
Stripped length		mm	7
DIAZED fuse		A	4
			Operational class gG Characteristic: slow
Miniature circuit breaker			C characteristic according to DIN VDE 0641
Endurance			Same as basic circuit breaker

MO320 motor operator

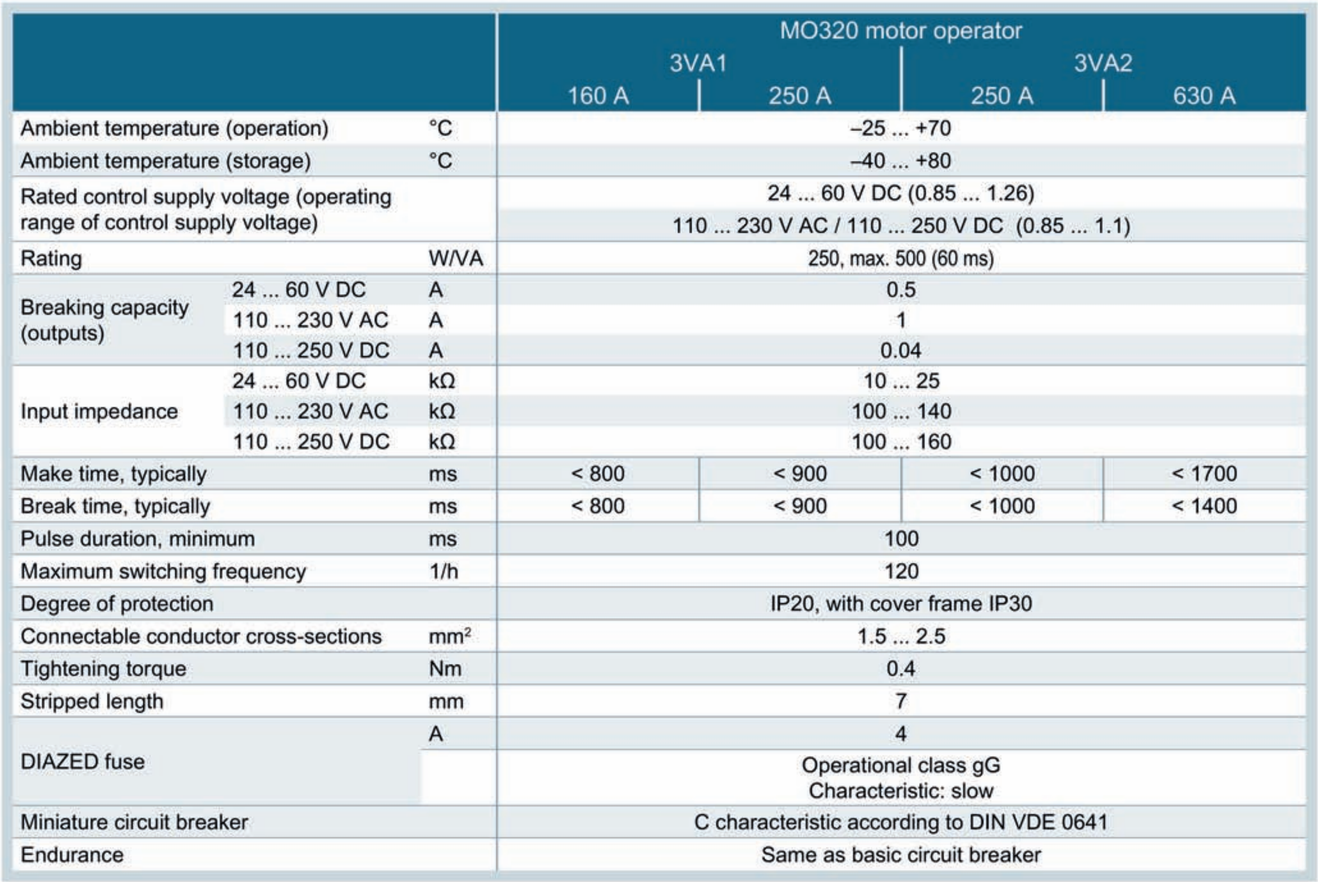

			MO320 motor operator			
			3VA1		3VA2	
			160 A	250 A	250 A	630 A
Ambient temperature (operation)		°C	–25 ... +70			
Ambient temperature (storage)		°C	–40 ... +80			
Rated control supply voltage (operating range of control supply voltage)			24 ... 60 V DC (0.85 ... 1.26)			
			110 ... 230 V AC / 110 ... 250 V DC (0.85 ... 1.1)			
Rating		W/VA	250, max. 500 (60 ms)			
Breaking capacity (outputs)	24 ... 60 V DC	A	0.5			
	110 ... 230 V AC	A	1			
	110 ... 250 V DC	A	0.04			
Input impedance	24 ... 60 V DC	kΩ	10 ... 25			
	110 ... 230 V AC	kΩ	100 ... 140			
	110 ... 250 V DC	kΩ	100 ... 160			
Make time, typically		ms	< 800	< 900	< 1000	< 1700
Break time, typically		ms	< 800	< 900	< 1000	< 1400
Pulse duration, minimum		ms	100			
Maximum switching frequency		1/h	120			
Degree of protection			IP20, with cover frame IP30			
Connectable conductor cross-sections		mm²	1.5 ... 2.5			
Tightening torque		Nm	0.4			
Stripped length		mm	7			
DIAZED fuse		A	4			
			Operational class gG Characteristic: slow			
Miniature circuit breaker			C characteristic according to DIN VDE 0641			
Endurance			Same as basic circuit breaker			

SEO520 motor operator with stored energy operator

		SEO520 motor operator with stored energy operator 3VA2 250 A
Ambient temperature (operation)	°C	–25 … +70
Ambient temperature (storage)	°C	–40 … +80
Rated control supply voltage (operating range of control supply voltage)		24 V DC (0.85 … 1.26)
		42 … 60 V DC / 42 … 60 V AC (0.85 … 1.26)
		110 … 230 V AC / 110 … 250 V DC (0.85 … 1.1)
Rating	W/VA	300, max. 500 (60 ms)
Outputs		2 x relay outputs (250 V rated voltage), see below for details
Make time, typically	ms	< 80
Break time, typically	ms	< 80
Pulse duration, minimum	ms	20
Maximum switching frequency	1/h	120
Degree of protection		IP20, with cover frame IP30
Connectable conductor cross-sections	mm²	1.5 … 2.5
Tightening torque	Nm	0.4
Stripped length	mm	7
DIAZED fuse	A	4
		Operational class gG Characteristic: slow
Miniature circuit breaker		On request
Spring charging time	s	3.5 … 4.5

Details of breaking capacity of inputs/outputs

Control voltage	AC-15	AC-12	DC-13	DC-12
24 V	3 A	6 A	0.8 A	4 A
42 V			0.4 A	2 A
60 V			0.25 A	0.8 A
110 V			0.2 A	0.5 A
230 V			0.1 A	0.25 A
250 V				

4.7 Locking and interlocking

4.7.1 General information

With all types of 3VA molded case circuit breaker, a basic distinction is made between:

- Locking of molded case circuit breakers
- Interlocking of molded case circuit breakers

4.7.1.1 Locking

Padlock devices can be used to lock 3VA molded case circuit breakers in the OFF (O) or ON (I) position. A molded case circuit breaker cannot be operated when it is locked.

Locking a molded case circuit breaker in the OFF (O) position

In order to prevent closure of a 3VA molded case circuit breaker, it can be locked in the OFF (O) position by a padlock. Once it is locked, the 3VA molded case circuit breaker is safely locked in the OFF (O) position. It can be unlocked again only by an authorized person.

The padlock devices for locking the 3VA molded case circuit breaker in the OFF (O) position ensure safe separation of the main contacts as defined by IEC 60947-2.

Locking a molded case circuit breaker in the ON (I) position

It is also possible to safely lock a 3VA molded case circuit breaker in the ON (I) position using a padlock device. The breaker contacts cannot be opened when it is locked in this position. A 3VA molded case circuit breaker can be released from its ON position again only by an authorized person.

The TRIP function, i.e. the protective functionality of the 3VA molded case circuit breaker, is not affected by locking the breaker in the ON (I) position. In the event of a fault, the 3VA molded case circuit breaker trips in the normal way.

4.7.1.2 Interlocking

The available interlocking devices can be used to implement a mutual interlock between at least two 3VA molded case circuit breakers.

The interlocking device only ever releases one 3VA molded case circuit breaker at a time, thereby ensuring that only the released circuit breaker can be operated. All other 3VA molded case circuit breakers remain in the safe OFF (O) position and are blocked by the interlock.

Principle of two mutually interlocked 3VA molded case circuit breakers:

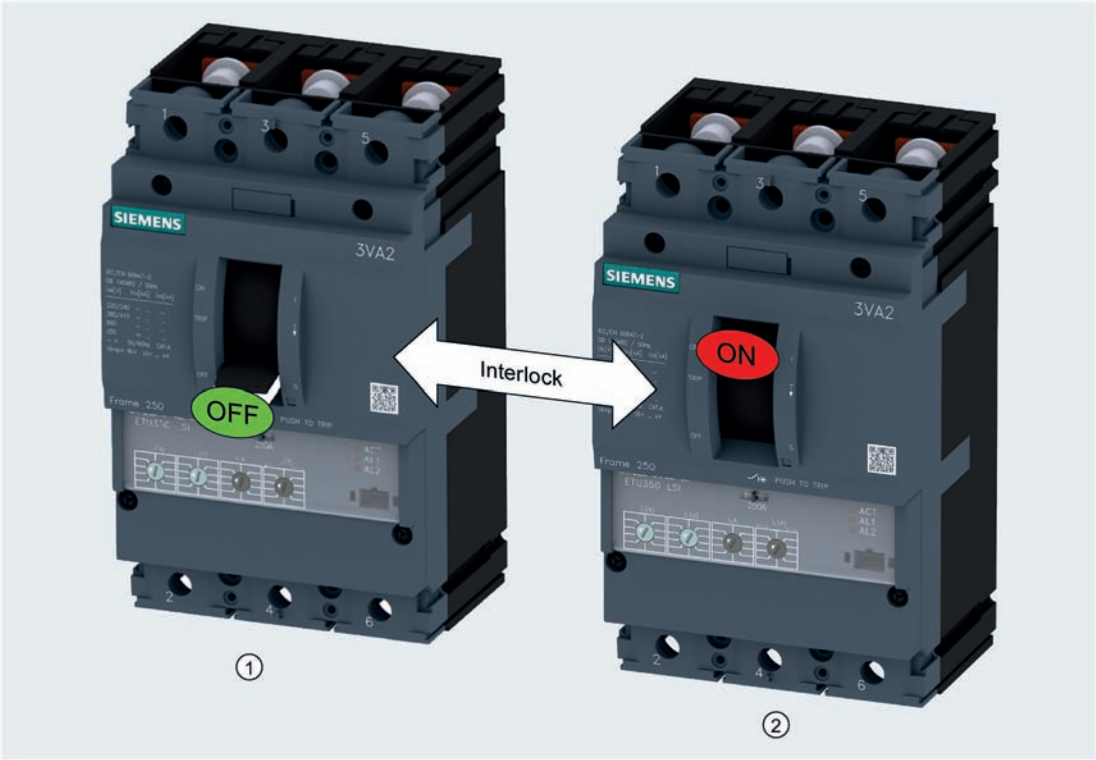

① Molded case circuit breaker blocked/locked in the safe switching state OFF (O)
② Molded case circuit breaker released for operation

The following interlocking systems are available for 3VA molded case circuit breakers:

- Front interlock
- Rear interlock

Front interlock

All front interlocks are installed on the front panel of the 3VA molded case circuit breaker. Front interlocks make it impossible to install some other external accessories, e.g. motor operator, rotary operators. They also partially restrict access to internal accessory compartments.

Rear interlock

The rear interlock does not affect the front panel of the 3VA molded case circuit breaker. All components of the interlocking system are concealed behind the molded case circuit breaker or the mounting plate.

4.7.2 Locking

The following locking devices are available for 3VA molded case circuit breakers:

- Padlock device for the handle
- Cylinder locks for locking the 3VA molded case circuit breaker

4.7.2.1 Padlock device for the handle

The padlock device for the handle is directly attached to the handle of the 3VA molded case circuit breaker and latched in place.

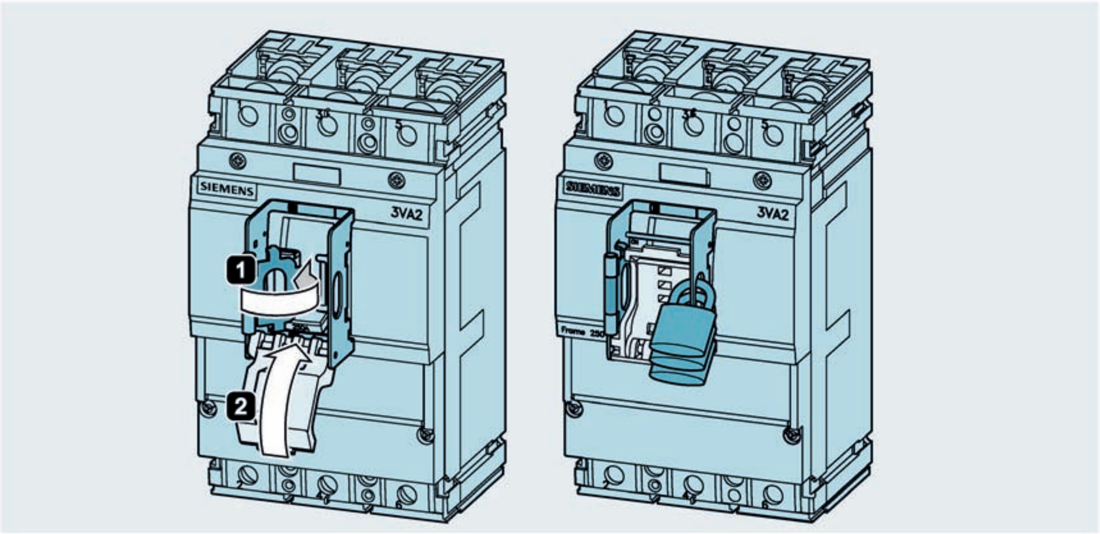

Note

For installation instructions, please refer to operating instructions "Padlock device for the handle".

When the padlock device for the handle is installed, the 3VA molded case circuit breaker can be locked in the OFF (O) position by up to three padlocks (shackle diameter 4.5 to 8.5 mm).

If the application requires the 3VA molded case circuit breaker to be locked in the ON (I) position as well, the metal pin ① must be removed by pliers from the handle, see illustration below. This deliberate action is a safety precaution and prevents accidental locking of the breaker in the ON position.

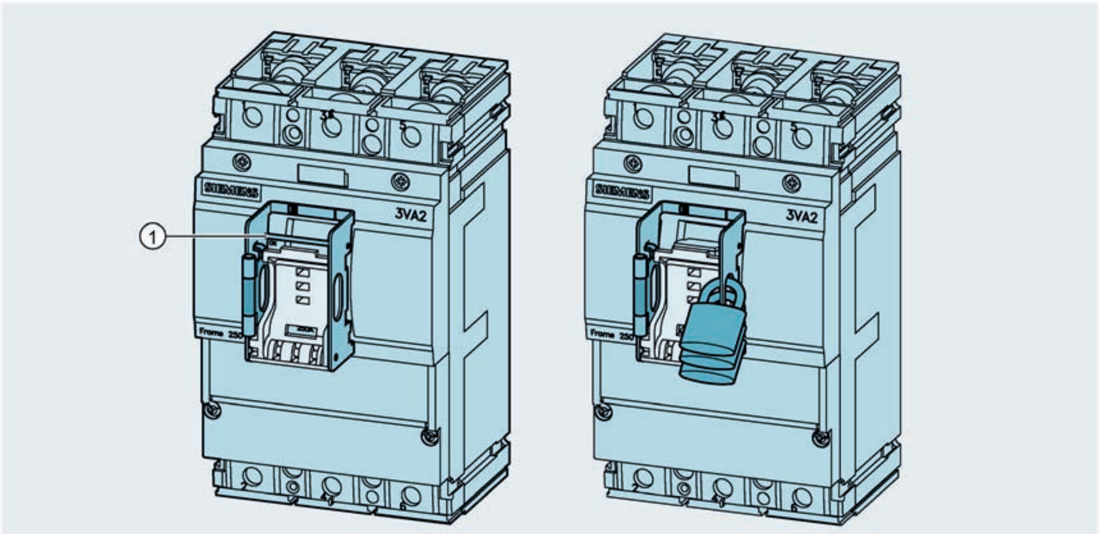

① Metal pin

Padlock devices in INSTA distribution boards

Installed padlock devices for the handle of 3VA1 molded case circuit breakers in rated current versions 100 A, 160 A and 250 A have a cover size of 45 mm. They are therefore suitable for installation in INSTA distribution boards.

Installation of other accessories

When the padlock device for the handle is fitted, some other accessories cannot be installed, see chapter Possible combinations of of accessories (Page 186).

4.7.2.2 Cylinder locks for locking the 3VA molded case circuit breaker

The 3VA molded case circuit breaker can also be locked in the OFF (O) or ON (I) position by means of a cylinder lock (type Ronis). The 3VA molded case circuit breaker is protected against further operation once it has been locked.

Cylinder locks (type Ronis) can be fitted to all types of 3VA molded case circuit breaker. The cylinder lock is installed in an accessory compartment of the 3VA molded case circuit breaker.

To provide a cylinder lock, the following two components need to be ordered:

- One cylinder lock (type Ronis)
  One lock and two keys are always included in the order.

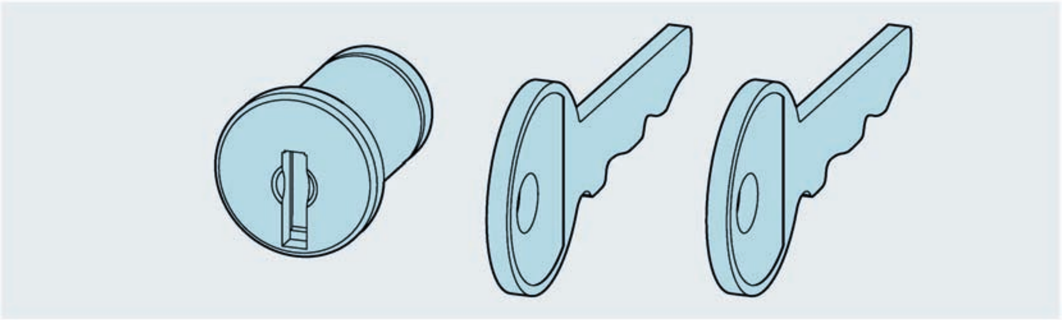

Selection of the lock number is highly flexible, i.e. it can be selected from a choice of three different lock numbers. If different cylinder lock numbers are required for multiple locks, they can be selected from the predefined article numbers stated in the catalog.

- One adapter kit
  The adapter kit transfers the motion of the lock to the switching mechanism.
  The article number includes the adapter kit and two cylinder lock housings. One cylinder lock housing (locking) is used for locking applications and the other housing (interlocking) for interlocking applications.

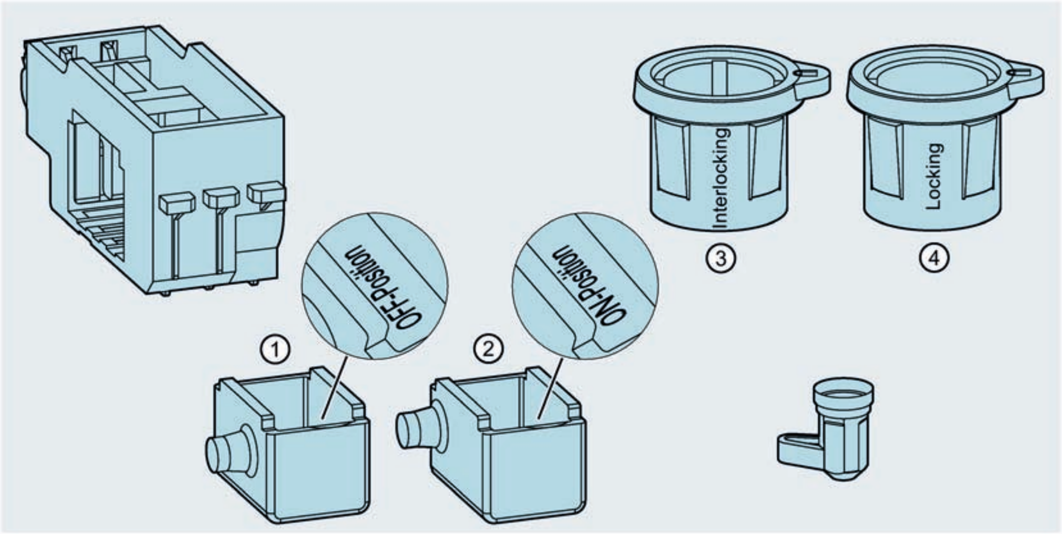

①	Slide for locking in the OFF position
②	Slide for locking in the ON position
③	Cylinder lock housing for locking
④	Cylinder lock housing for interlocking

Locking in the OFF (O) position

The cylinder lock (type Ronis) is installed with the adapter kit and the cylinder lock housing for locking in the right-hand accessory compartment of the 3VA molded case circuit breaker so that the breaker can be locked in the OFF (O) position. The slide for locking in the OFF position is fitted for this purpose.

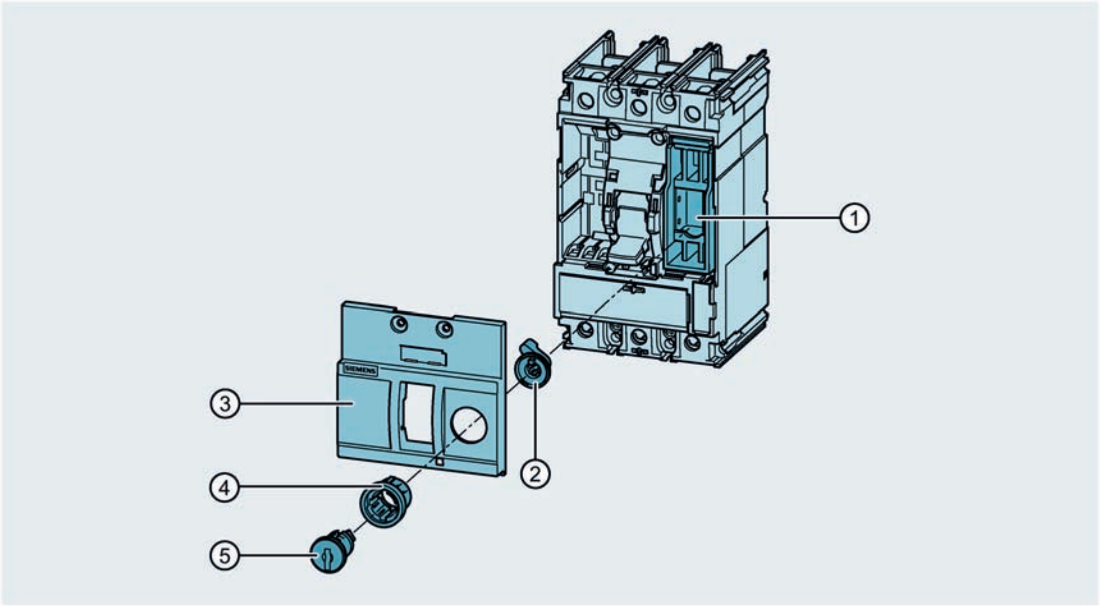

①	Adapter kit with OFF position slide	④	Cylinder lock housing for locking
②	Actuating lever	⑤	Cylinder lock (type Ronis)
③	Accessory cover		

1. Remove the accessory cover ③ from the 3VA molded case circuit breaker.
2. Drill a hole through the accessory cover at the position marked on the rear face and smooth down the drilled surface with a file.
3. Insert a cylinder lock (type Ronis) ⑤ and the locking version of the cylinder lock housing ④ in the drilled hole and connect it securely to the accessory cover ② via the actuating lever.
4. Install the adapter kit ① in the right-hand accessory compartment of the 3VA molded case circuit breaker.
5. Reattach the accessory cover to the 3VA molded case circuit breaker.

To lock the 3VA molded case circuit breaker in the OFF (O) position, the key must be turned to the vertical "locked" position.

Locking in the ON (I) position

For safety reasons, a deliberate action is required to lock the breaker in the ON (**I**) position. The slide for locking in the ON position must be used for this purpose. Further information can be found in the relevant operating instructions.

Use of cylinder locks (type Ronis) for other applications

Cylinder locks (type Ronis) can also be used in the following applications:

- For locking the racking distance in draw-out units, see chapter Draw-out technology (Page 285)
- For locking in the manual operators of the 3VA molded case circuit breaker, see chapter Manual operators (Page 309)

Installation of other accessories

The installation of the cylinder lock in the accessory compartment of the molded case circuit breaker partly excludes the installation of other accessory components, e.g. front mounted accessories such as manual and motor operators as well as front interlocks. Likewise the cylinder lock blocks slots for internal accessories (for overview see chapter Mounting locations on 3VA molded case circuit breakers (Page 191)).

4.7.3 Front interlocking

Front interlocks are installed on the front panel of the 3VA molded case circuit breaker.

The following interlocking devices are available for 3VA molded case circuit breakers:

- Cylinder locks for implementing interlocks between an unlimited number of molded case circuit breakers
- Sliding bar with Bowden cable
- Sliding bar

4.7.3.1 Cylinder locks for implementing interlocks between multiple 3VA molded case circuit breakers

Cylinder locks (type Ronis) can be installed in the accessory compartments not only to lock molded case circuit breakers, see chapter Cylinder locks for locking the 3VA molded case circuit breaker (Page 365), but also to implement mutual interlocks between an unlimited number of 3VA molded case circuit breakers. The purpose of this system is to ensure that only one single 3VA molded case circuit breaker included in the interlock application can be in the ON (I) position at any given time.

In order to implement a mutual interlock between multiple 3VA molded case circuit breakers, the following two components must be ordered for each circuit breaker to be included in the interlock arrangement:

- One cylinder lock (type Ronis)
  One lock and two keys are always included in the order.

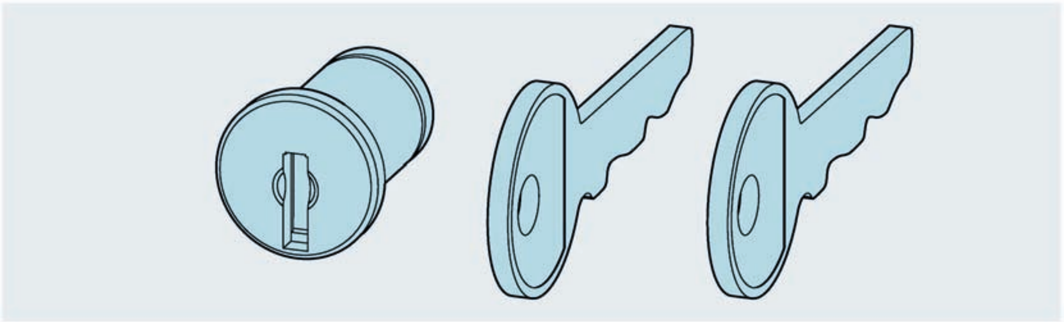

Note

It is important to order the same lock number for all circuit breakers to be included in the interlock arrangement!

- One adapter kit
  The adapter kit transfers the motion of the lock to the switching mechanism.
  The article number includes the adapter kit and two cylinder lock housings.

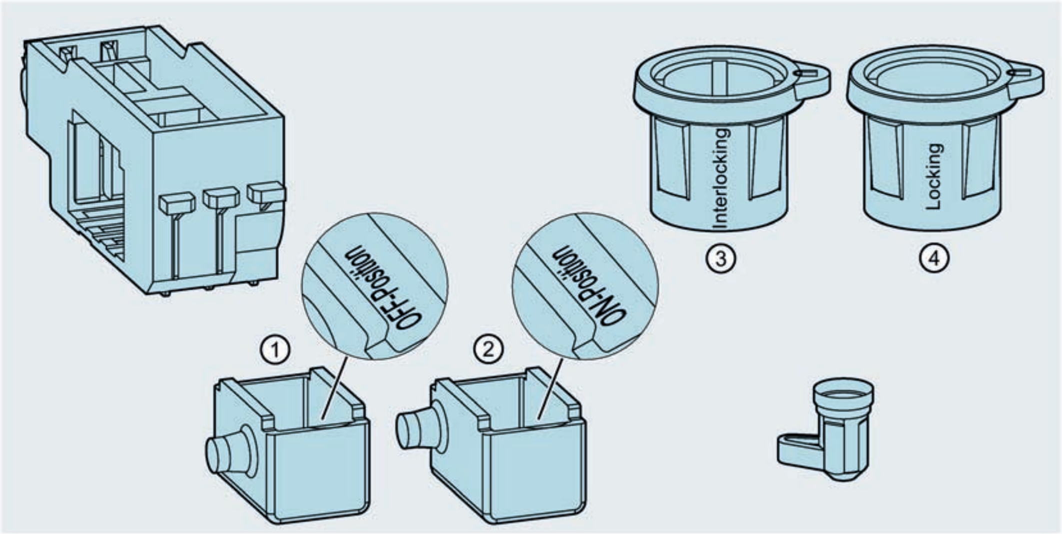

① Slide for locking in the OFF position
② Slide for locking in the ON position
③ Locking version of cylinder lock housing
④ Interlocking version of cylinder lock housing

If, for example, three 3VA molded case circuit breakers are to be interlocked, three cylinder locks (type Ronis) with the same lock number and 3 adapter kits suitable for the particular 3VA molded case circuit breaker must be ordered.

Installing the cylinder lock in the accessory compartment

The cylinder lock (type Ronis) is installed together with the adapter kit and the interlocking version of the cylinder lock housing in the right-hand accessory compartment of the molded case circuit breaker.

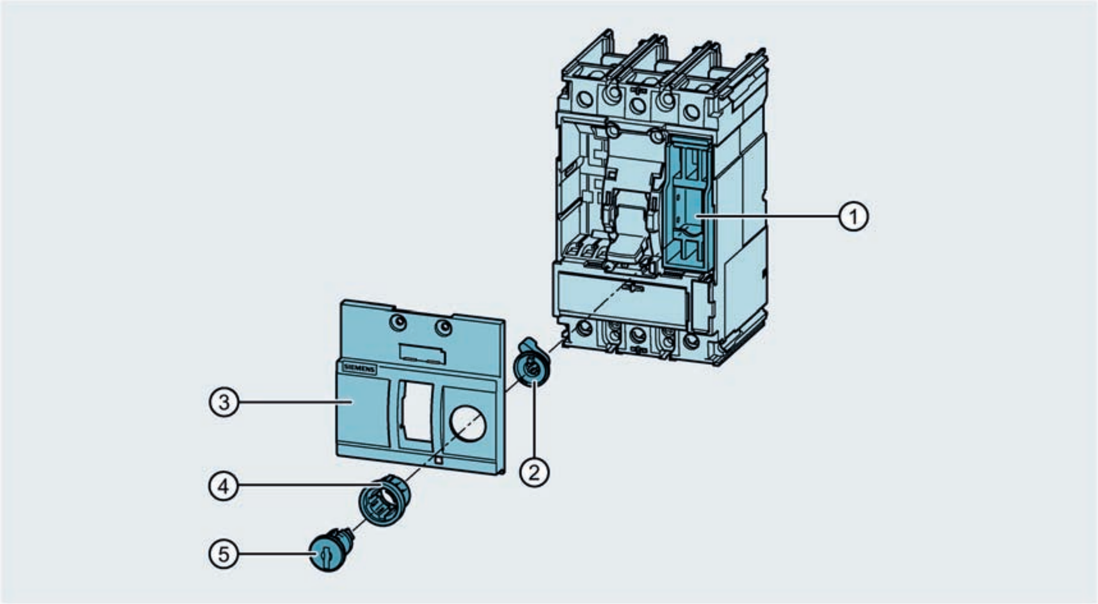

①	Adapter kit	④	Cylinder lock housing for interlocking
②	Actuating lever	⑤	Cylinder lock (type Ronis)
③	Accessory cover		

1. Remove the accessory cover ③ from the 3VA molded case circuit breaker.
2. Drill a hole through the accessory cover at the position marked on the rear face and smooth down the drilled surface with a file.
3. Insert a cylinder lock (type Ronis) ⑤ and the interlocking version of the cylinder lock housing ④ in the drilled hole and connect it securely to the accessory cover ② via the actuating lever.
4. Install the adapter kit ① in the right-hand accessory compartment of the 3VA molded case circuit breaker.
5. Reattach the accessory cover to the 3VA molded case circuit breaker.

A cylinder lock (type Ronis) is installed at each 3VA molded case circuit breaker to be interlocked.

Interlocking of molded case circuit breakers

WARNING

Use of more than one key poses safety hazard and/or risk of damage to property

Only leave one key in the entire interlock arrangement.

Store all other keys in a safe place or lock them away.

In order to ensure reliable functioning of the interlock, only one must remain in the entire interlock arrangement. This one key serves as the release instrument for only one molded case circuit breaker at a time.

1. Move all 3VA molded case circuit breakers in the interlock arrangement to the OFF position and lock them (turn the cylinder lock to the horizontal "locked" position).

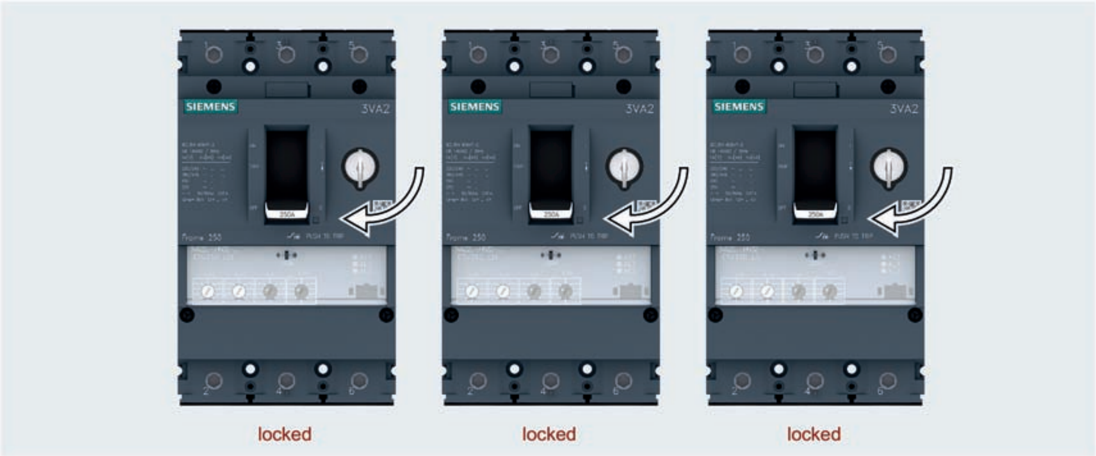

2. Remove all keys.

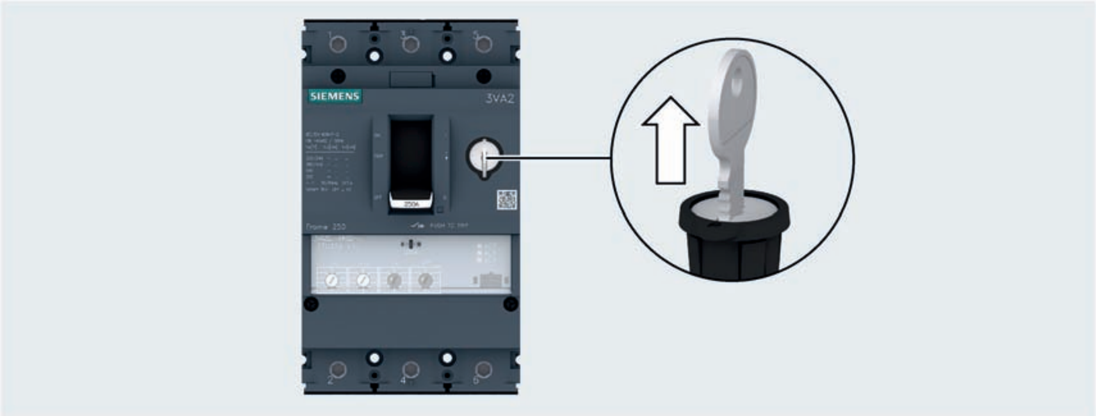

All 3VA molded case circuit breakers in the interlock arrangement are now safely locked in the OFF (O) position and cannot be operated.

3. Insert **one single** key in one circuit breaker included in the interlock; store or lock away **all other** keys.

4. Use the single key to turn the cylinder lock of the 3VA molded case circuit breaker to be released to the "unlocked" position.
   Once the key is in the "unlocked" position, it must not be removed.

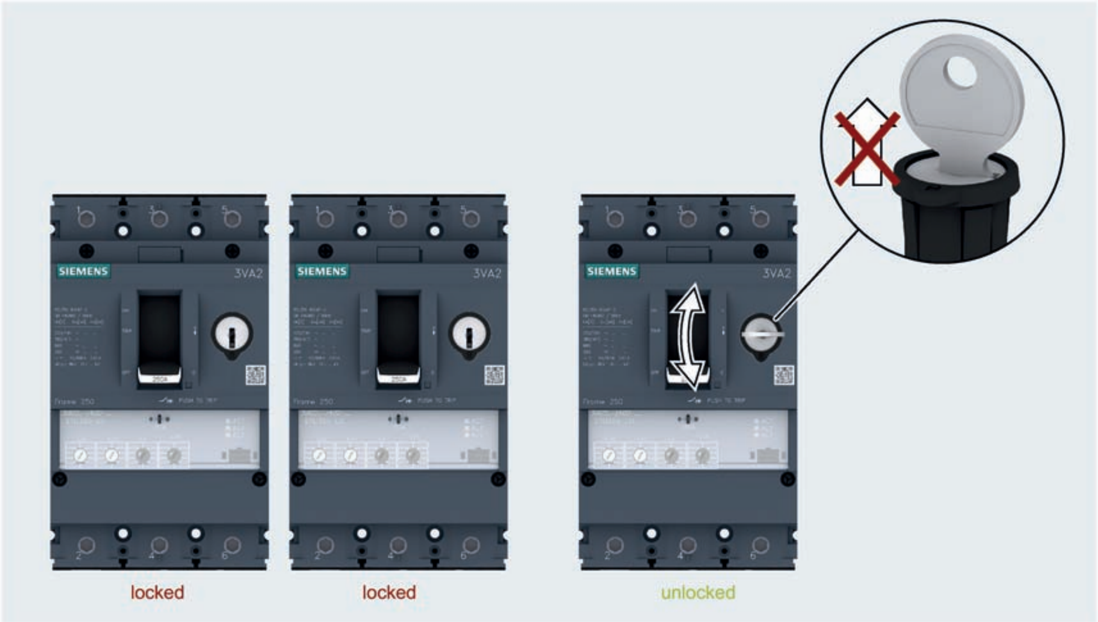

5. Move the handle of the released 3VA molded case circuit breaker to the ON (I) position.

Releasing a different molded case circuit breaker

1. Move the handle of the currently released molded case circuit breaker to the OFF (O) position.
2. Turn the cylinder lock to the vertical "locked" position and remove the key.
   This 3VA molded case circuit breaker is now safely locked in the OFF (O) position and cannot be operated.
3. Use the same key to turn the cylinder lock of the 3VA molded case circuit breaker to be released to the horizontal "unlocked" position.
4. Move the handle of the released 3VA molded case circuit breaker to the ON (I) position.

Interlock combinations

The following interlock combinations can be implemented with cylinder locks:

- All 3VA1 and 3VA2 molded case circuit breakers can be mutually interlocked.
- Interlocks can be implemented between all sizes of breakers.
- Mutual interlocks can be implemented between all 2-pole, 3-pole and 4-pole molded case circuit breakers.

Installation of other accessories

When the cylinder lock is fitted in the accessory compartment of the circuit breaker, some other accessories cannot be installed, see chapter Possible combinations of of accessories (Page 186).

See also

Manual operators (Page 309)

Draw-out technology (Page 285)

4.7.3.2 Sliding bar with Bowden cable: Modules for sliding bar with Bowden cable

A mutual interlock between up to three molded case circuit breakers can be implemented by means of the front Bowden cable interlock module. This interlock functions according to the blocking principle: If one of the circuit breakers included in the interlock is unlocked, the Bowden cables move in such a way as to ensure that the other molded case circuit breakers are locked in the OFF (O) position.

In order to implement a front Bowden cable interlock, sliding bar modules must be mounted on the 3VA molded case circuit breakers to be included in the interlock arrangement. These modules are equipped with a handle blocking device to block or release operation of the handle.

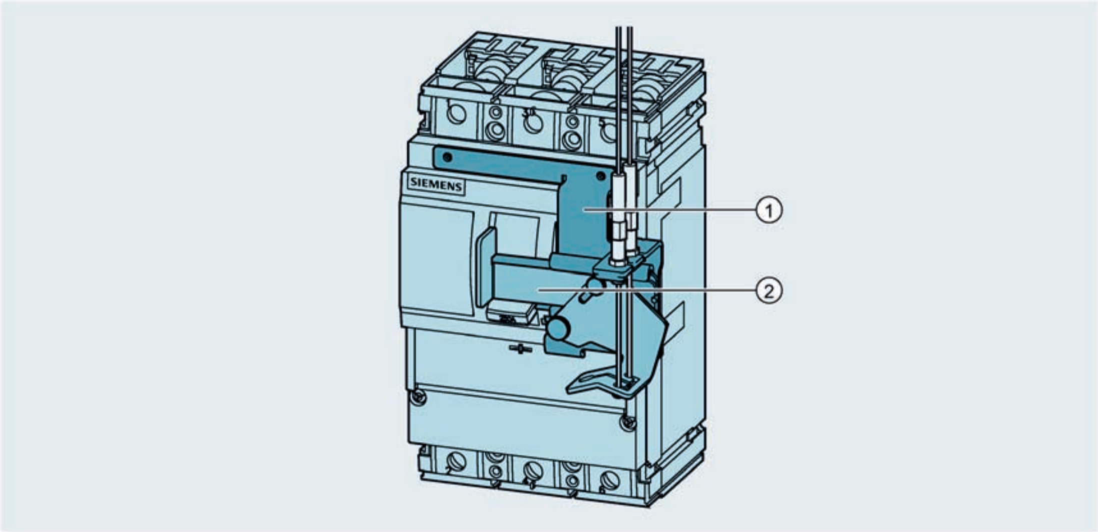

① Sliding bar module
② Slide

A Bowden cable must be installed in addition to the sliding bar modules. This cable prevents the slides from releasing more than one molded case circuit breaker at any one time. As a result, only one 3VA molded case circuit breaker at a time can be operated and only **one** molded case circuit breaker can be in the ON (**I**) position.

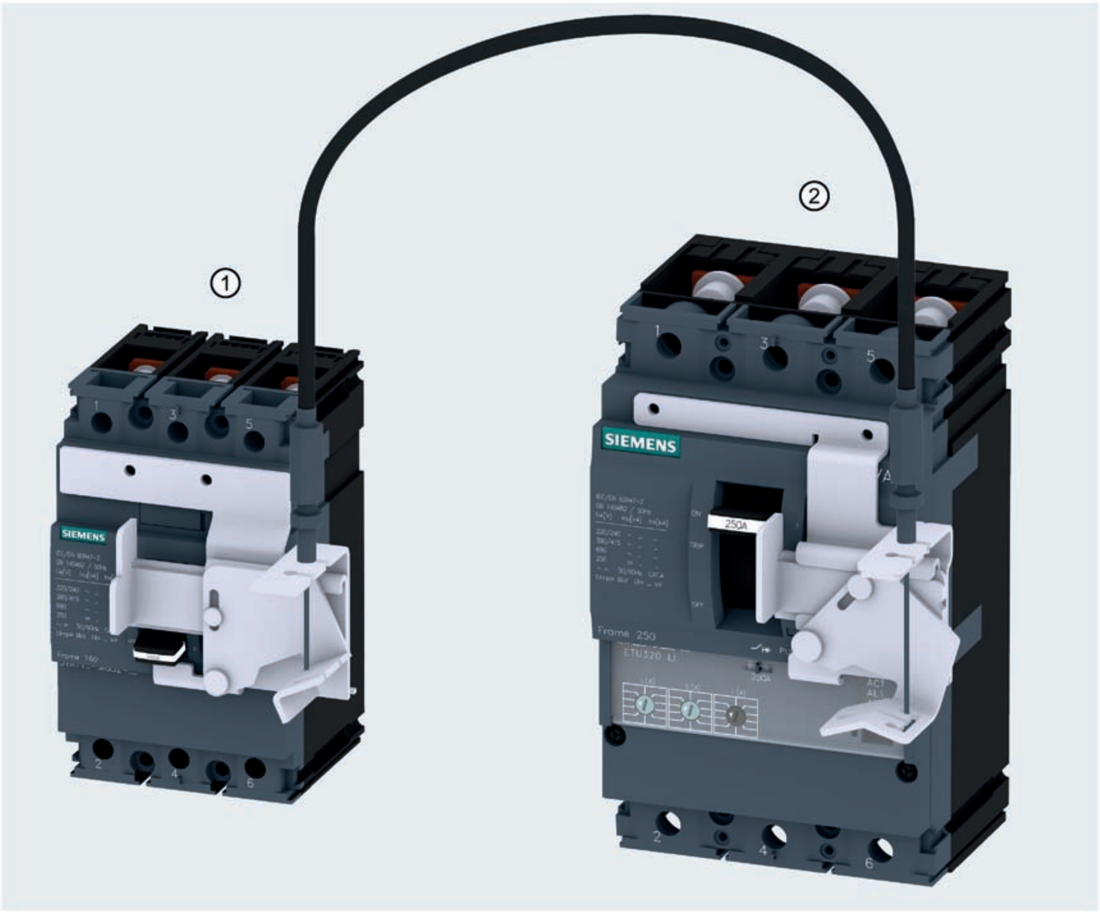

① 3VA1 160 molded case circuit breaker, blocked by slide
② 3VA2 250 molded case circuit breaker, released by slide

Note

For installation instructions, please refer to operating instructions "Sliding bar modules".

Bowden cable lengths

The following lengths of Bowden cable can be ordered:

- 0.5 m
- 1.0 m
- 1.5 m

Interlock combinations

Interlocks can be implemented between the following 3VA molded case circuit breakers:

							
		3VA11 2-, 3- and 4-pole	3VA12 3- and 4-pole	3VA13 / 3VA14 3- and 4-pole	3VA20 / 3VA21 / 3VA22 3- and 4-pole	3VA23 / 3VA24 3- and 4-pole	3VA25 3- and 4-pole
	3VA11 2-, 3- and 4-pole	■	■	■	■	■	
	3VA12 3- and 4-pole	■	■	■	■	■	
	3VA13 / 3VA14 3- and 4-pole	■	■	■	■	■	
	3VA20 / 3VA21 / 3VA22 3- and 4-pole	■	■	■	■	■	
	3VA23 / 3VA24 3- and 4-pole	■	■	■	■	■	■
	3VA25 3- and 4-pole			■		■	■

Possible combinations of handle positions

When a cable interlock module using a Bowden cable is installed to interlock **two** 3VA molded case circuit breakers, the following combinations of handle position are possible:

Molded case circuit breaker 1	Molded case circuit breaker 2
ON / TRIP	OFF
OFF	ON / TRIP
OFF	OFF

When a cable interlock module using a Bowden cable is installed to interlock **three** 3VA molded case circuit breakers, the following combinations of handle position are possible:

Molded case circuit breaker 1	Molded case circuit breaker 2	Molded case circuit breaker 3
ON / TRIP	OFF	OFF
OFF	ON / TRIP	OFF
OFF	OFF	ON / TRIP
OFF	OFF	OFF

Installation of other accessories

When the front Bowden cable interlock module is fitted, some other accessories cannot be installed, see chapter Possible combinations of of accessories (Page 186).

4.7.3.3 Sliding bar

The sliding bar can be used to implement an interlock between three 3VA molded case circuit breakers of the same size. Up to three padlocks (shackle diameter of between 4.5 and 8 mm) can be attached in order to lock the bar in position.

Installing the sliding bar

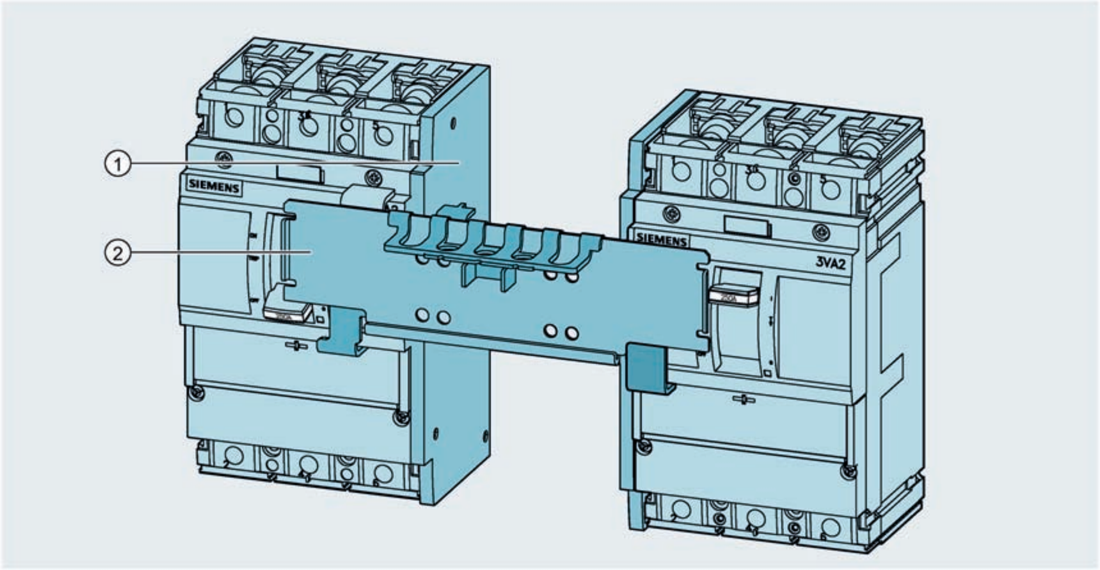

①	Side plate
②	Locking slide

1. Attach two side plates ① to the sides of the 3VA molded case circuit breakers.
2. Attach the locking slide ② securely to the two side plates.

Locking the handle

The handle of the 3VA molded case circuit breaker to be locked is blocked when the locking slide is moved into position.

Up to three commercially available padlocks (shackle diameter 4.5 to 8 mm) can be fitted to lock the slide in position and prevent operation of the blocked handle. The blocked 3VA molded case circuit breaker is thus always locked in the safe OFF (O) position, while the released circuit breaker can still be operated.

If the locking slide is in the midway position and locked there by padlocks, both or all three of the molded case circuit breakers can be blocked or held securely in the OFF (O) position.

Example of an interlock between two 3VA molded case circuit breakers:

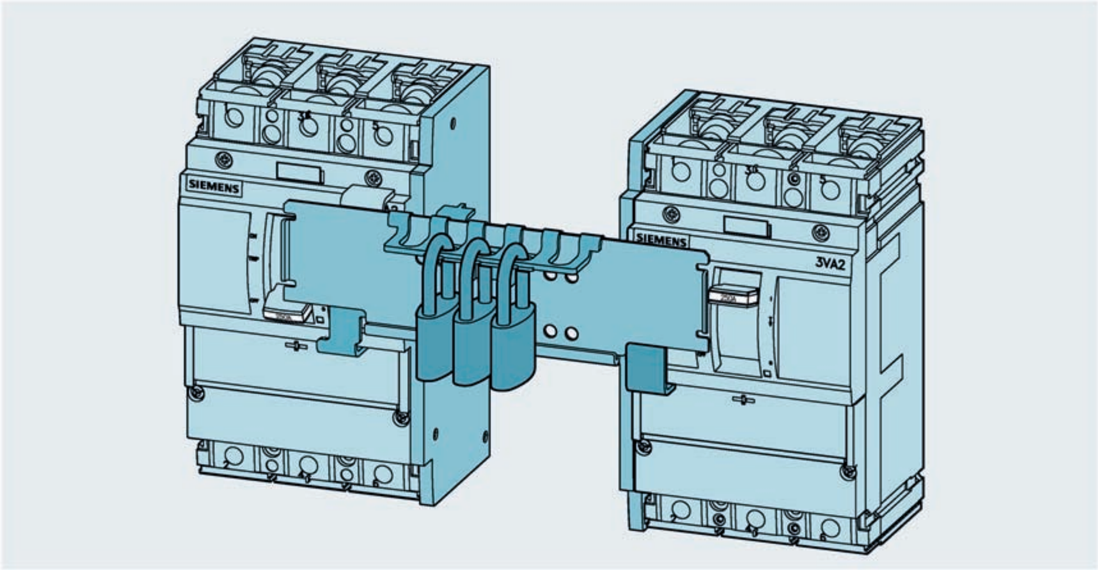

Scope of supply

One article number always includes:

- 2 side plates
- 1 locking slide

Interlock combinations

The following interlock combinations can be implemented with the sliding bar:

- Interlocks can be implemented between the same rated current versions of molded case circuit breakers:
  - 3VA11 with 3VA11
  - 3VA12 with 3VA12
  - 3VA13 / 3VA14 / 3VA23 / 3VA24 with 3VA13 / 3VA14 / 3VA23 / 3VA24
  - 3VA20 / 3VA21 / 3VA22 with 3VA20 / 3VA21 / 3VA22
  - Not available for 3VA25
- All 2-pole (see note below), 3-pole and 4-pole molded case circuit breakers of the same size can be interlocked.

Note

The 2-pole molded case circuit breaker must always be mounted on the right-hand side in the sliding bar module.

Possible combinations of handle positions

When a sliding bar interlock between **two** 3VA molded case circuit breakers is locked by padlocks, the following combinations of sliding bar position are possible:

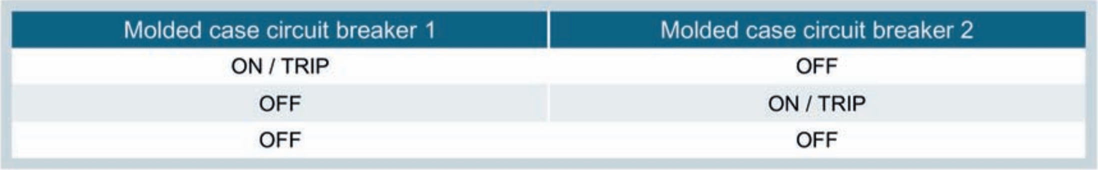

Molded case circuit breaker 1	Molded case circuit breaker 2
ON / TRIP	OFF
OFF	ON / TRIP
OFF	OFF

When a sliding bar interlock between **three** 3VA molded case circuit breakers is locked by padlocks, the following combinations of handle position are possible:

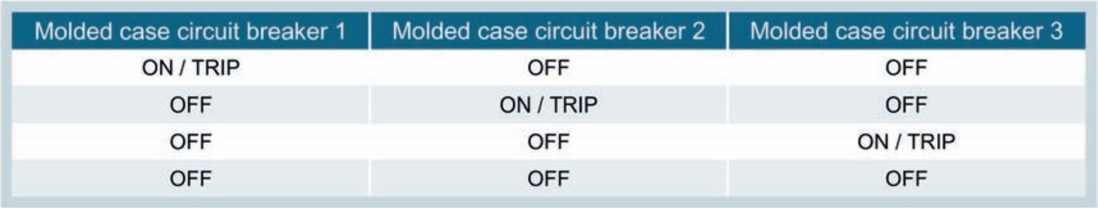

Molded case circuit breaker 1	Molded case circuit breaker 2	Molded case circuit breaker 3
ON / TRIP	OFF	OFF
OFF	ON / TRIP	OFF
OFF	OFF	ON / TRIP
OFF	OFF	OFF

Installation of other accessories

When the front handle blocking device is fitted, some other accessories cannot be installed, see chapter Possible combinations of of accessories (Page 186).

4.7.4 Rear interlock

Rear interlock

The rear interlock system is capable of creating an interlock between two 3VA molded case circuit breakers and does not restrict the number of accessories which can be assembled on the front panel of the molded case circuit breaker.

The rear interlock operates according to the following principle: When one molded case circuit breaker is closed, the other circuit breaker is prevented from closing by a tappet which engages in the breaker mechanism directly from the rear panel of the molded case circuit breaker.

The rear interlock is provided by two interlocking modules which are attached at the rear of the molded case circuit breakers and behind the mounting plate. The two interlocking modules are interconnected by means of the interlocking rod.

Machining work to the panel mounting plate is required.

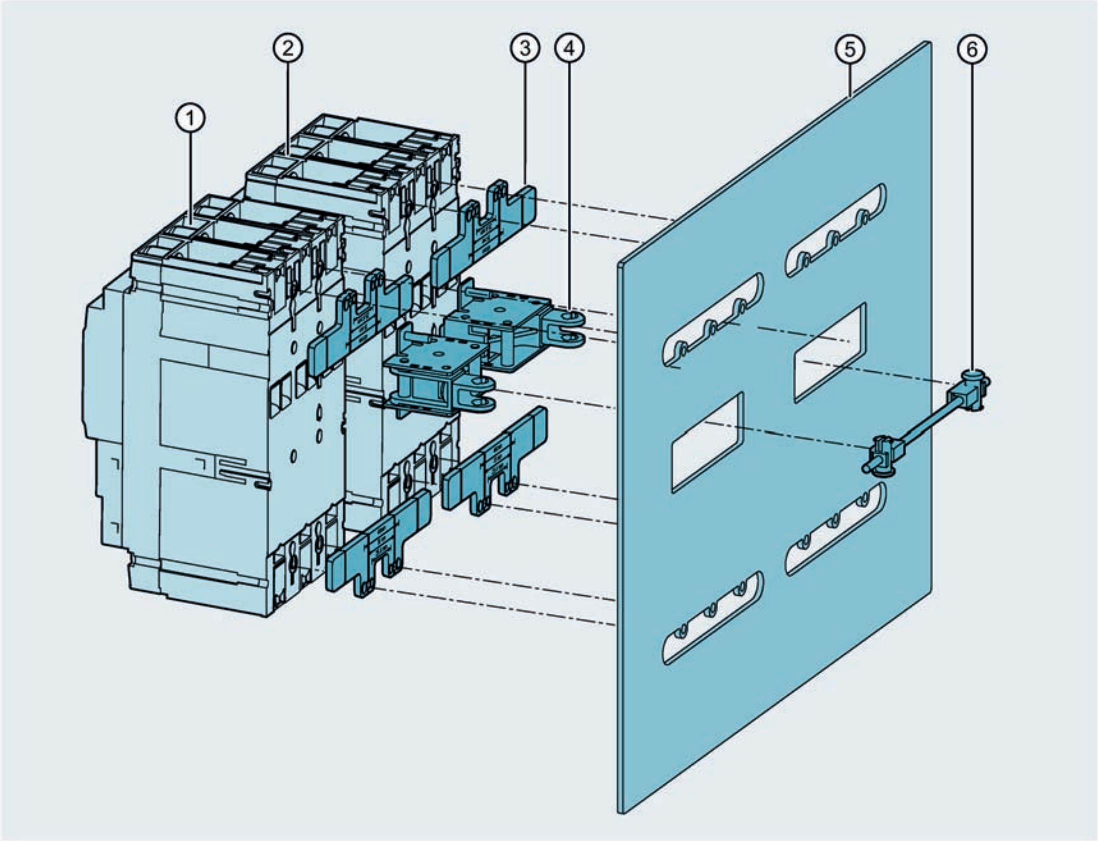

①	Molded case circuit breaker 1	④	Interlocking modules
②	Molded case circuit breaker 2	⑤	Panel mounting plate
③	Mounting accessories	⑥	Interlocking rod

Note

The mounting frame for the rear interlocking rod can only be used with fixed-mounted molded case circuit breakers.

For installation instructions, please refer to the operating instructions for the rear interlock.

Scope of supply

One article number always includes:

- Two interlocking modules
- Mounting accessories
- Interlocking rod

Interlock combinations

The following interlock combinations are possible:

- All molded case circuit breakers 3VA11 / 3VA12 / 3VA13 / 3VA14 and 3VA20 / 3VA21 / 3VA22 / 3VA23 / 3VA24 can be independently interlocked.
- Mutual interlocks can be implemented between all 2-pole, 3-pole and 4-pole molded case circuit breakers.

Handle positions

When a rear interlock is installed between two 3VA molded case circuit breakers, the following combinations of handle position are possible:

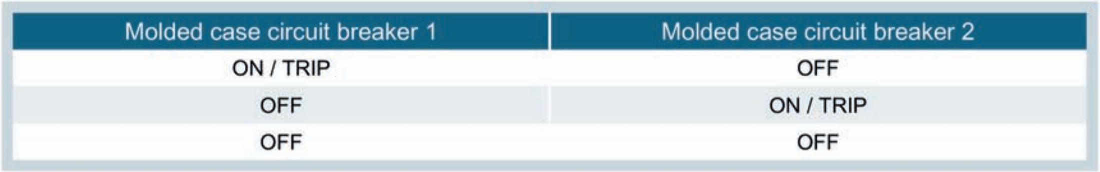

Molded case circuit breaker 1	Molded case circuit breaker 2
ON / TRIP	OFF
OFF	ON / TRIP
OFF	OFF

Aid to facilitate installation of rear interlock

An installation aid is available for all 3VA molded case circuit breakers. It facilitates installation of the rear interlock and reduces the amount of work required to the panel mounting plate.

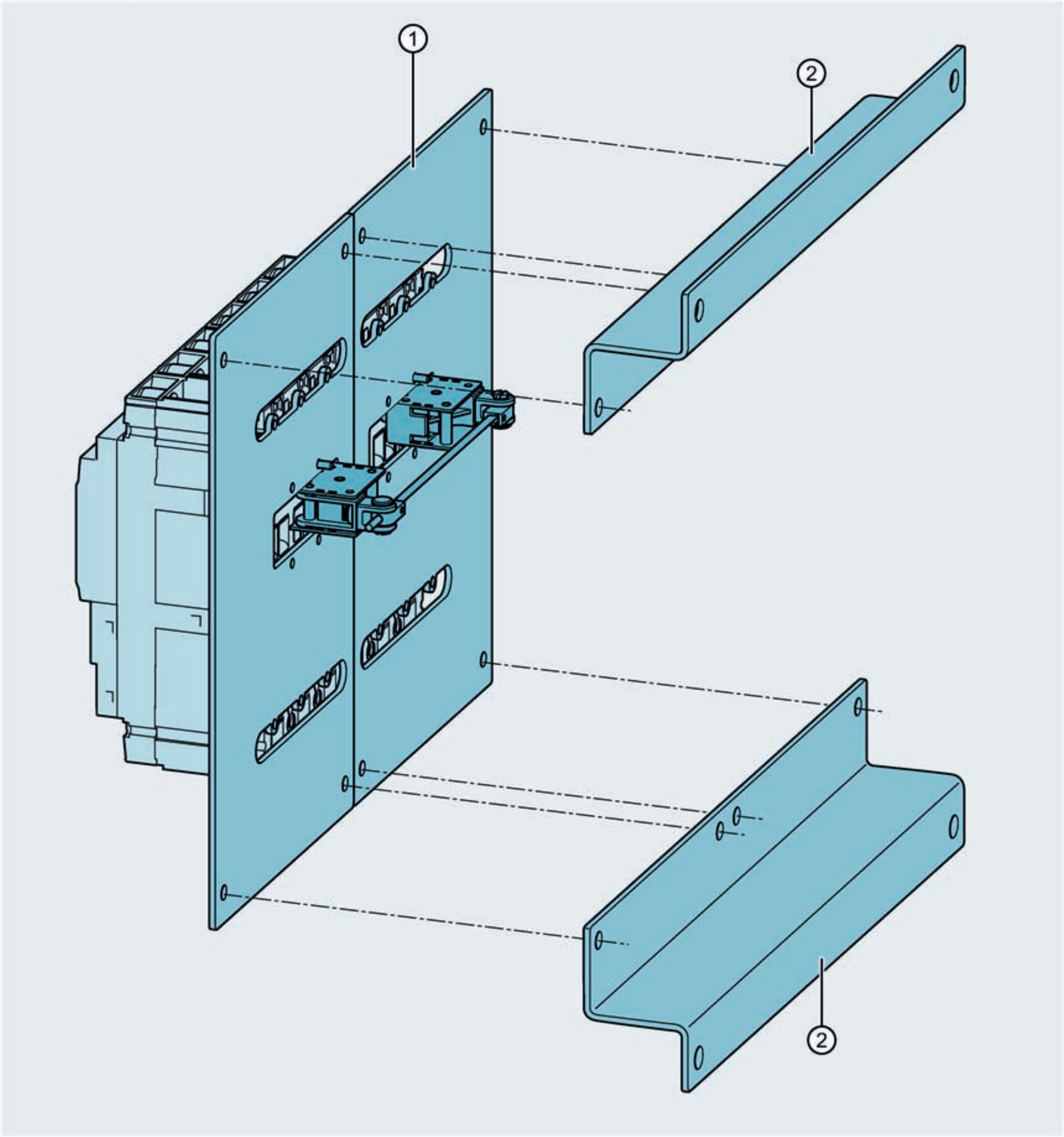

①	Mounting plates (specific to molded case circuit breaker)
②	DIN rail

1. Assemble installation frame:
   - Place mounting plates ① on the molded case circuit breaker.
   - Install rear interlock.
   - Bolt the DIN rails ② to the adapter plates.
2. Bolt the assembled installation frame to the panel mounting plate.

No further work to the panel mounting plate is required.

The same rear interlock combinations can be implemented regardless of whether or not the installation aid is used.

Note

For installation instructions, please refer to the operating instructions for the rear interlock.

Rear interlock for plug-in and draw-out units

In order to use a rear interlock for plug-in or draw-out versions of the molded case circuit breakers, the tappet needs to be lengthened. The tappet extension transfers the interlocking motion of the modules through the plug-in socket or the draw-out socket.

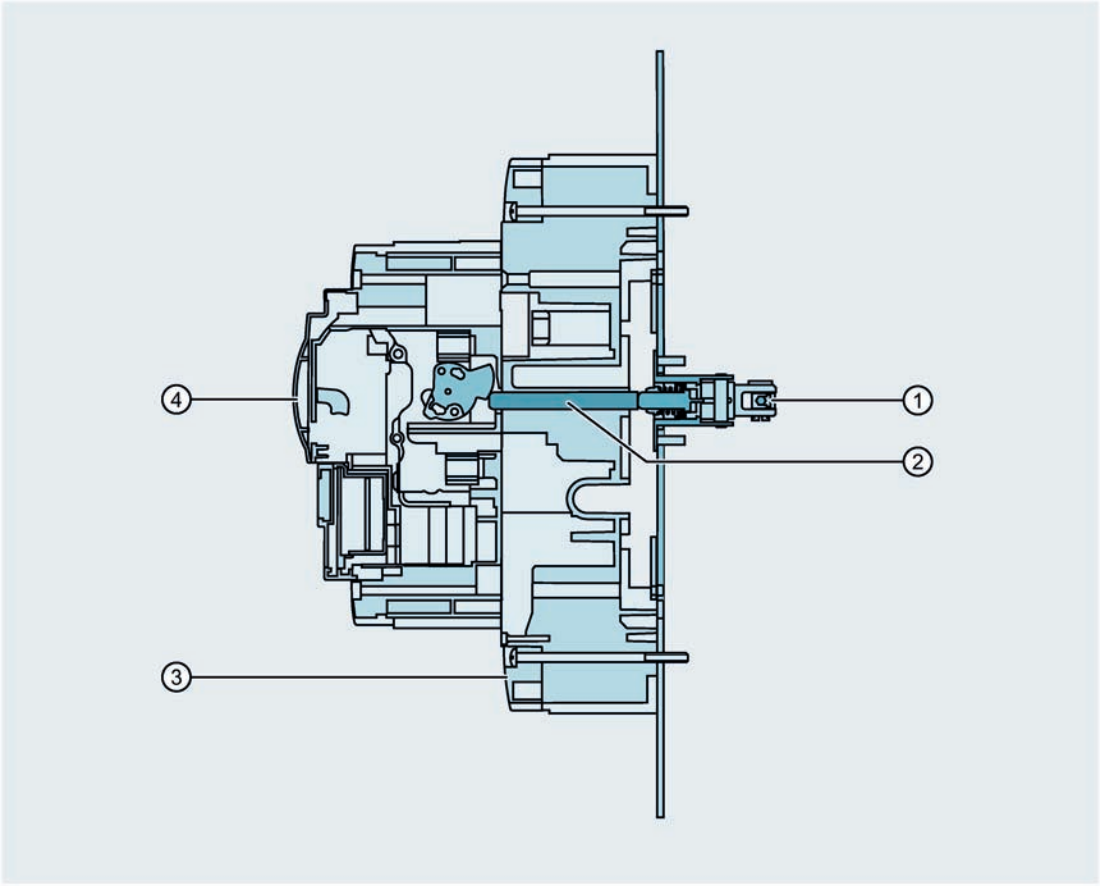

①	Interlocking module	③	Plug-in or draw-out socket
②	Tappet extension	④	Molded case circuit breaker

The rear interlock for plug-in or draw-out units is available as a complete kit containing all the required components:

- Two interlocking modules
- Mounting accessories
- Interlocking rod
- All the required tappet extensions

An installation aid must be ordered separately if it is required.

Interlock combinations

The same rear interlock combinations can be implemented for plug-in and draw-out versions as for fixed-mounted versions.

Note

Plug-in and draw-out technology cannot be used in conjunction with mounting plates and profile rails.

4.8 Residual current devices

Residual current devices afford fault protection (formerly referred to as: protection in case of indirect contact) and supplementary protection (formerly referred to as: protection in case of direct contact) in low-voltage systems. In the event of a basic insulation failure or direct contact with live components, they provide some degree of protection to persons, material assets and livestock against harm.

Operating principle of a residual current device

In fault-free electrical installation, the vector sum of the load currents of all connected conductors equals zero. A residual current occurring in the protected circuit as the result of an insulation fault, for example, induces a voltage in the secondary winding of a summation current transformer. The evaluation electronics system monitors the induced voltage and transmits a trip command to the RCD trip unit if the trip criterion is fulfilled. The molded case circuit breaker with residual current protection combination is designed to ensure that the molded case circuit breaker contacts open if the residual current exceeds a preset value.

4.8.1 Portfolio

The new portfolio of residual current devices includes different RCD designs so that an optimum solution is available for every conceivable type of application. The types can be distinguished as follows:

- Designs:
  - Side mounted
  - Loadside
  - Modular

Because a wide variety of residual current waveforms (e.g. sinusoidal AC residual currents or smooth DC residual currents) can occur in different applications (depending on the electronic switch in the circuit), the following types of residual current devices are available:

- Type A
- Type B
- Type B+

Since all residual current devices can be set to between 0.03 A and maximum 5 A or 30 A, they are suitable for use in the following applications:

- Personnel protection: $I_{\Delta n}$ = 30 mA with instantaneous tripping

---

Note

In order to protect personnel, it is necessary to seal the transparent protective cover so that the 30 mA setting range cannot be changed.

- Fire protection: $I_{\Delta n} \leq 300$ mA
- Protection in the case of indirect contact
- Ground-fault protection

While residual current devices attached to the circuit breakers are supplied with voltage from all connected phases of the system to be monitored, the modular residual current device (MRCD) is supplied from a 1-phase auxiliary voltage source (internal or external). The modular residual current device utilizes an undervoltage release (UVR) or a shunt trip.

The recommended applications for different RCD designs are thus as follows:

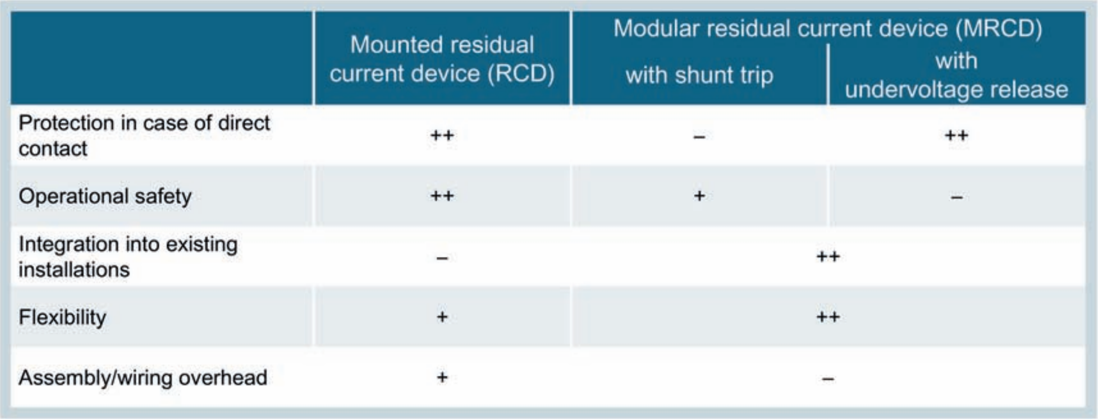

	Mounted residual current device (RCD)	Modular residual current device (MRCD)	
		with shunt trip	with undervoltage release
Protection in case of direct contact	++	–	++
Operational safety	++	+	–
Integration into existing installations	–	++	
Flexibility	+	++	
Assembly/wiring overhead	+	–	

+	Suitable
–	Less suitable

Sizes

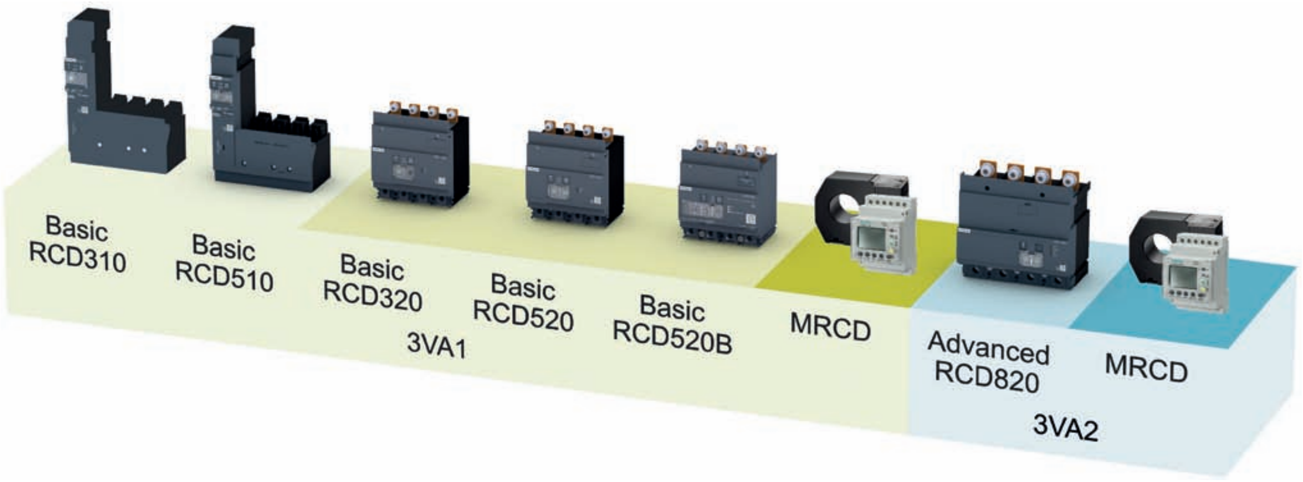

Special "BASIC" residual current devices have been developed for use with 3VA1 molded case circuit breakers.

Basic RCD310 and Basic RCD510

Side-mounted residual current devices are available for 3VA1 molded case circuit breakers and 3VA1 switch disconnectors with box terminals up to 250 A. These residual current devices are optimally designed for installation in distribution boards.

Features

The key features of the RCD310 and RCD510 series are:

- Type A
- Response current $I_{\Delta n}$ adjustable in eight steps from 0.03 A to 5 A
- Compact, L-shaped design
- Cover size 45 mm
- 3 and 4-pole versions
- LEDs to signal "ready" state and pre-alarms
- Tripped signal at device and via electrical contacts
- Signal must be acknowledged via the RESET button on the residual current device
- Through-hole technology allows connection of cables to circuit breaker's box terminals
- Electromagnetic release (RCR) with dual functionality
- Suitable for mounting on DIN rail
- Suitable for use as a display unit only

Special characteristics

There are two different functional types of side mounted residual current device, i.e. the RCD310 and the RCD510. The differences in functionality between these two types are explained by the list of features below.

- Time delay:
  - RCD310 without time delay (instantaneous)
  - RCD510 with an adjustable delay time Δt from 0 to 3000 ms
- Number of poles:
  - RCD310 is available only in a 4-pole version
  - RCD510 is available in 3-pole and 4-pole versions
- Rated operating current:
  - RCD310 available only up to 160 A (3VA11)
  - RCD510 available up to 250 A
- Supplied connection technology:
  - RCD510 (3VA12 molded case circuit breaker) is supplied with the necessary connection components (1 set of box terminals).

Advantages

- Slimline, side mounted design (30 mm) leaves space for other components in the distribution board.
- The residual current devices, the 3VA1 molded case circuit breakers and the 3VA1 switch disconnectors all have a cover size of 45 mm, so that they are easy to install, for example, adjacent to miniature circuit breakers in a distribution board.
- With the DIN rail adapter accessory installed, RCD310 and RCD510 units up to 160 A can be mounted easily on a DIN rail.
  The side mounted residual current devices also feature a screw mounting option so that they can be attached directly to a mounting plate.

Basic RCD320 and Basic RCD520

Features

The key features of the RCD320 and RCD520 series are:

- Type A
- Response current $I_{\Delta n}$ adjustable in eight steps from 0.03 A to 5 A
- Compact design
- Cover size 45 mm
- 3 and 4-pole versions
- LEDs to signal "ready" state and pre-alarms
- Tripped signal at device and via electrical contacts
- Signal must be acknowledged via the RESET button on the residual current device
- Suitable for use in 1-phase and 3-phase systems

Special characteristics

The differences between the two RCD320 and RCD520 residual current devices designed for loadside mounting are explained below:

- Time delay:
  - RCD320 without time delay (instantaneous)
  - RCD520 with an adjustable delay time Δt from 0 to 3000 ms
- Number of poles:
  - RCD320 is available only in a 4-pole version
  - RCD520 is available in 3-pole and 4-pole versions
- Rated operating current:
  - RCD320 available only up to 160 A (3VA11)
  - RCD520 available up to 250 A

Basic RCD520B

Residual current devices types B and B+ for loadside mounting are supplied for 3VA11 molded case circuit breakers up to 160 A.

Type B is also described as universal current sensitive. Unlike residual current devices RCD320 or RCD520, devices of the type RCD520B detect smooth DC residual currents in addition to pure sinusoidal AC residual currents and pulsating DC residual currents.

Features

The key features of the RCD520B series are:

- Types B and B+ (selectable)
- Type B+ meets the requirements for advanced preventative protection against fire according to VDE 0664-400
- Use as residual current device or residual current display unit (selectable)
- Response current $I_{\Delta n}$ adjustable in
  Type B: 8 steps from 0.03 A to 5 A
  Type B+: 4 steps from 0.03 A to 0.3 A
- Delay time Δt adjustable in 10 steps from 0 to 10000 ms
- Compact design
- Cover size 45 mm
- 3 and 4-pole versions
- LEDs to signal "ready" state, pre-alarm and MONITORING mode
- Integrated auxiliary contacts for tripped signals and pre-alarms
- Signal must be acknowledged via the RESET button on the residual current device
- Tripping by means of plunger
- Periodic self-test functions

Special characteristics

- Selection between type B/type B+:
  - Selection of tripping characteristic (B or B+) possible
- Selection between RCD mode and MONITORING mode:
  - RCD520B functions as a protection device in "RCD mode"
  - RCD520B functions purely as a display unit in "MONITORING mode"
- Number of poles:
  - The 3-pole version of RCD520B is installed in a 4-pole enclosure
- Rated current:
  - RCD520B available for 3VA11 (160 A) molded case circuit breaker

A special "ADVANCED" residual current device has been developed for use with 3VA2 molded case circuit breakers.

Advanced RCD820

The RCD820 series is suitable for use in applications with exacting technical requirements:

- High residual current response values
- Long delay time settings for selective grading
- Onboard interface to a fieldbus communication system
- Graded alarm system

Features

The key features of the RCD820 series are:

- Residual current devices available with ratings up to 630 A
- Type A
- Response current $I_{\Delta n}$ adjustable in ten steps from 0.03 A to 30 A
- Delay time Δt adjustable in ten steps from 0 to 10000 ms
- 3 and 4-pole versions
- LEDs to signal "ready" state, pre-alarms and communication status
- Auxiliary contacts for tripped signals and pre-alarms
- With remote acknowledgement and remote commissioning capability
- Remote tripping possible via communication link or auxiliary contact
- Suitable for use in 1-phase and 3-phase systems
- Suitable for use as a display unit only

Modular residual current device

The modular residual current device (MRCD) is ideal for applications which require a high degree of flexibility. It can be retrofitted easily in an existing installation, for example, in order to provide residual current protection without the need for any major modifications to the existing application.

Thanks to its modular design, it is compatible with all breaker designs and can therefore be combined with 3VA1 molded case circuit breakers and with circuit breakers from the 3VA2 range.

Note

For possible combinations, please refer to Chapter Modular residual current device (Page 478). Further tested combinations available on request.

The key features of the MRCD are:

- Digital modular residual current device type A (compliant with IEC 60947-2 Annex M)
- Response current $I_{\Delta n}$ adjustable in seven steps from 0.03 A to 3 A
- Delay time Δt adjustable in twelve steps from 0 to 10 s
- Compact design
- Cover size 45 mm
- Suitable for 2-pole, 3-pole or 4-pole circuit breakers
- Summation current transformer with a diameter ranging from 35 mm to 210 mm
- Operated by means of 6 buttons
- Output of status and current measured value on color display screen
- Fault cause is displayed in the event of faults
- Two relay contacts, one for alarm (warning of continuous rise in residual current) and one for trip, which can be programmed independently of one another
- Voltage of monitored circuit up to max. 690 V AC
- For installation on 35 mm DIN rail

4.8.1.1 Possible combinations of residual current devices and 3VA circuit breakers

Overview of possible combinations of residual current devices and 3VA circuit breakers		3VA1										3VA2									
		3VA10 100 A		3VA11 160 A		3VA12 250 A		3VA13 400 A		3VA14 630 A		3VA20 100 A		3VA21 160 A		3VA22 250 A		3VA23 400 A		3VA24 630 A	
Residual current device	Installation	3p	4p	3p	4p	3p	4p	3p	4p	3p	4p	3p	4p	3p	4p	3p	4p	3p	4p	3p	4p
Basic RCD310	Side mounted				F																
Basic RCD510	Side mounted			F	F	F	F														
Basic RCD320	Loadside				F1)																
Basic RCD520	Loadside			F1)	F1)	F1)	F1)														
Basic RCD520B	Loadside			F1)2)	F1)																
Advanced RCD820	Loadside											F	F	F	F	F	F	F	F	F	F
MRCD Type A	Flexible	F	F	F-PI		F-PI-DO		On request		On request		F-PI-DO		F-PI-DO		F-PI-DO		F-PI-DO		F-PI-DO	
MRCD Type B	Flexible	F	F	F-PI		On request		On request		On request		F-PI-DO		F-PI-DO		F-PI-DO		F-PI-DO		F-PI-DO	

3p	3-pole
4p	4-pole
F	Fixed-mounted circuit breaker
PI	Plug-in circuit breaker
DO	Draw-out circuit breaker
1)	Cannot be combined with switch disconnector
2)	3-pole version in 4-pole enclosure

4.8.2 Residual current devices for mounting on circuit breakers

The RCD310, RCD510, RCD320, RCD520, RCD520B and RCD820 residual current devices are available as accessories for mounting on specific 3VA molded case circuit breakers up to the largest circuit breaker size/current rating.

Combination with circuit breakers

After a residual current device has been mounted on a molded case circuit breaker or switch disconnector, the specifications of the breaker or disconnector remain unchanged with respect to the following characteristics:

- Standards
- Conductor cross-sections
- Use of connection accessories
- Isolating features
- Selective behavior

When a basic type residual current device is mounted on a 3VA1 molded case circuit breaker or a 3VA1 switch disconnector, the electrical rating of the equipment combination is automatically downgraded to the lower electrical rating of the residual current device.

Example:

U_e:	3VA1	≤ 690 V AC
	3VA1 and Basic residual current device	≤ 480 V AC

For more information, refer to chapter Technical specifications (Page 472).

Residual current devices

Standards

The combination of molded case circuit breaker and residual current device conforms to IEC 60947-2 Annex B.

Power supply

The residual current devices do not require an external power supply, but tap a supply from the main current paths of the molded case circuit breaker or switch disconnector.

Guaranteed to function properly

Proper functioning of the residual current device is guaranteed even with only one phase and N (applies to RCD320, RCD520, RCD520B and RCD820) or two phases (alternating current or pulsating direct voltage).

Direction of incoming supply

The direction of incoming supply to the combination of circuit breaker and residual current device is optional, i.e. it can be connected at the top or bottom. The performance of the residual current devices is not impaired by regenerative feedback from motors.

Device type

Residual current devices without an additional letter at the end of the short code (e.g. RCD520) meet the requirements for device type A, i.e. they are capable of detecting all sinusoidal AC residual currents and pulsating DC residual currents.

The letter B at the end of the short code (e.g. RCD520B) indicates that it is a universal current-sensitive residual current device (type B or B+).

Combination with external accessories

DIN rail adapters

DIN rail adapters are available as accessories for side-mounted residual current devices RCD310 and RCD510 up to 160 A. These permit fast and easy installation of residual current devices on 35 mm DIN rails compliant with IEC / EN 60715 TH35-7.5 and TH35-15.

You can find more information in chapter DIN rail adapter (Page 531).

4.8.2.1 Side mounted residual current devices Basic RCD310 and Basic RCD510

Front view of Basic RCD310 and Basic RCD510

RCD310

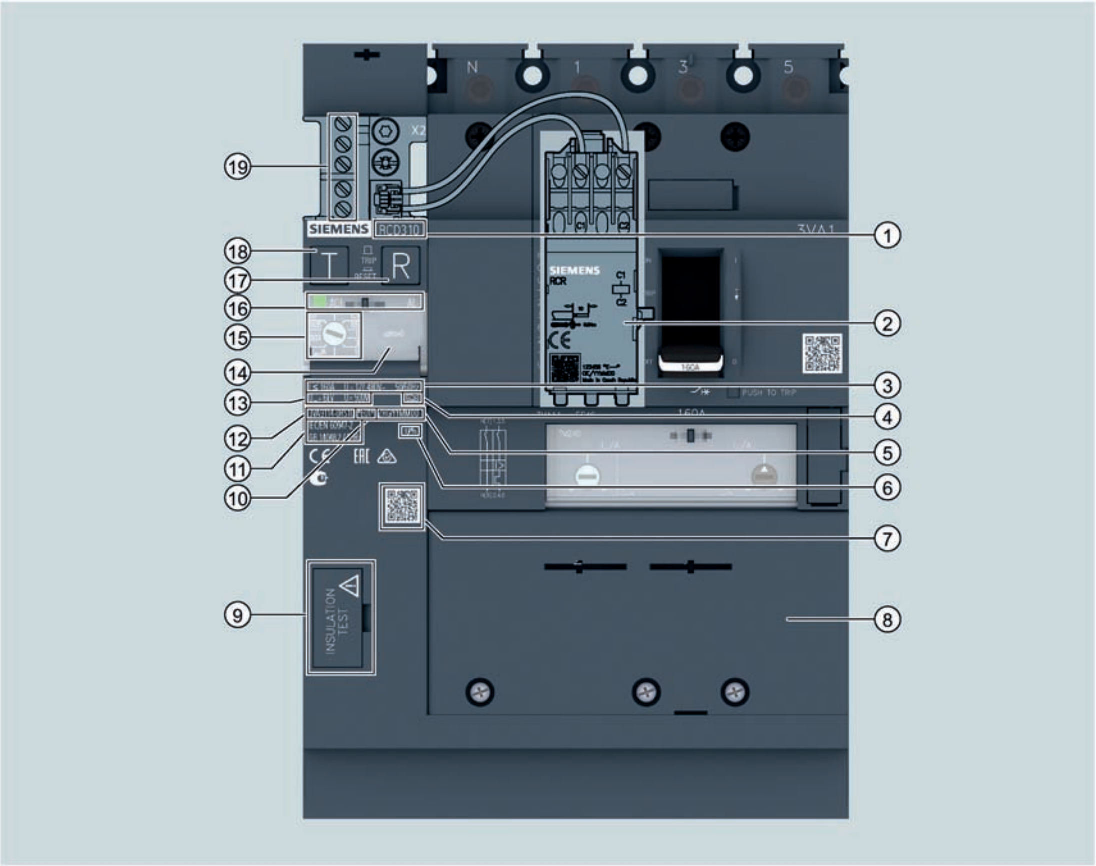

① Type designation
② Electromagnetic release (RCR = Residual Current Release)
③ Maximum rated operational current, rated operational voltage and frequency
④ Device type
⑤ Location and date of manufacture
⑥ Only suitable for use in 3-phase systems
⑦ Knowledge Manager
⑧ Contact hazard protective cover over main current paths with sealing option
⑨ Circuit breaker
⑩ Product version
⑪ Standard
⑫ Article number
⑬ Rated insulation voltage and rated impulse strength
⑭ Transparent protective cover over setting buttons
⑮ Setting button for response current
⑯ LED: ACTIVE and pre-alarm
⑰ RESET button / tripped display
⑱ Test button (test device)
⑲ Auxiliary contacts

RCD510

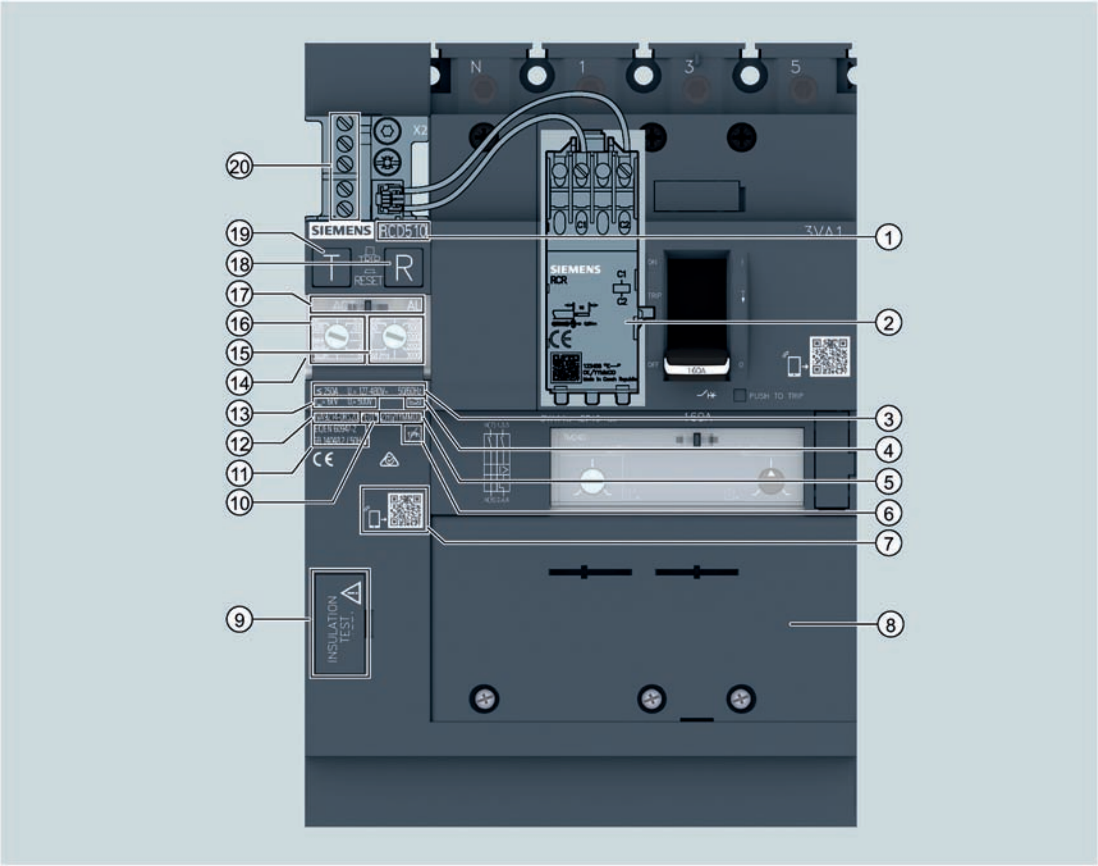

① Type designation

② Electromagnetic release (RCR = Residual Current Release)

③ Maximum rated operational current, rated operational voltage and frequency

④ Device type

⑤ Location and date of manufacture

⑥ Only suitable for use in 3-phase systems

⑦ Knowledge Manager

⑧ Contact hazard protective cover over main current paths with sealing option

⑨ Circuit breaker

⑩ Product version

⑪ Standard

⑫ Article number

⑬ Rated insulation voltage and rated impulse strength

⑭ Transparent protective cover over setting buttons

⑮ Setting button for delay time

⑯ Setting button for response current

⑰ LED: ACTIVE and pre-alarm

⑱ RESET button / tripped display

⑲ Test button (test device)

⑳ Auxiliary contacts

Description of front panel view

Display elements

"Ready" signals and alarms

- "Ready" signal of the residual current device:
  The LED labeled "ACT" stands for ACTIVE and lights up when the residual current device is ready.

- Pre-alarm:
  Both the Basic RCD310 and the Basic RCD510 feature an alarm LED labeled "AL" (pre-alarm) which lights up promptly to indicate potential shutdown of the installation due to residual current.

LED displays

LED	Status	Description
☐ ACT	Off	Residual current device is not in operation
▨ ACT	Flashing	Residual current device is malfunctioning
🟩 ACT	On	Residual current device is operating normally
🟩 ACT	On	The residual current I_{Δ} is higher than 30 % of the set response current ($I_{\Delta n}$ value)
🟨 AL	On	
▨ ACT	Flashing	Possible causes: - The residual current device is defective - The white setting arrow of the $I_{\Delta n}$ or Δt setting button is resting between two setting ranges
▨ AL	Flashing	

Tripped display

The <RESET> button is not only used to reset the residual current device, but also as a mechanical indication that the unit has "tripped". If a residual current is detected or the button <TEST> is pressed, the button <RESET> is automatically released and so signals that the residual current device has tripped. Even when the residual current device is at zero potential, the <RESET> remains in the "TRIP" position.

① Residual current device is operating normally and has not tripped

② Residual current device has tripped

Operator controls

Insulation tests

It is absolutely essential to isolate the evaluation electronics circuit while insulation tests are in progress in order to protect the circuit against potential damage on the one hand and to prevent detection of insulation faults due to the power pack on the other. This is done simply by withdrawing (15 to 17 mm) the circuit breaker which is anchored in the enclosure.

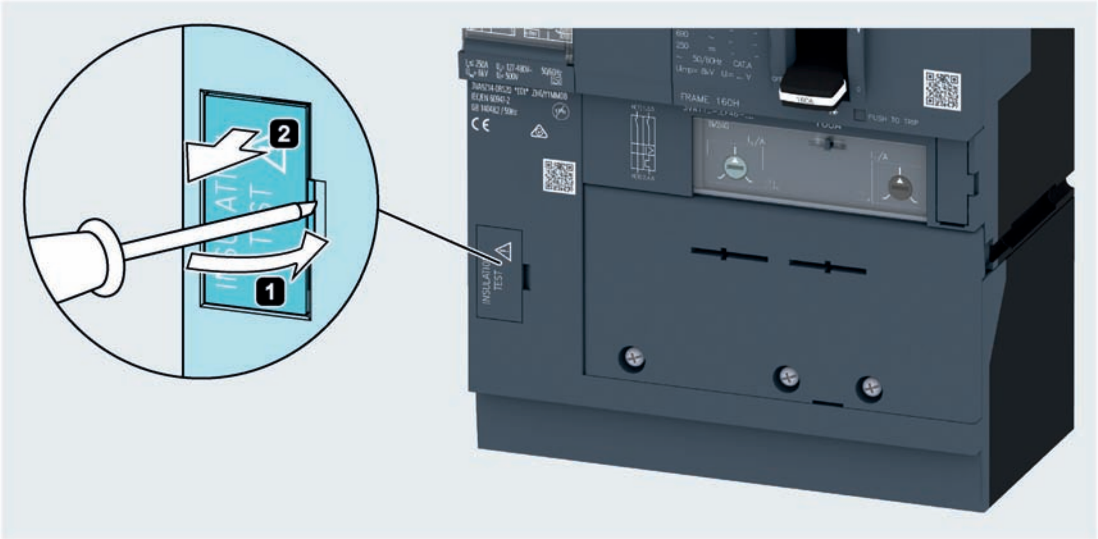

Disconnection of the main conductor connections is thus unnecessary. On completion of the tests, the circuit breaker must be pushed back into position before the residual current device is commissioned.

Testing and resetting the residual current device

Testing

Depending on operating conditions, the test button on the front panel of the residual current device should be pressed in order to function-test the device. The test button is labeled with the letter "T". If the test button is pressed, the device is tested immediately irrespective of the current delay time setting.

If the test button is pressed, a residual current is simulated on a test winding attached to the summation current transformer. If the residual current device is functioning properly, it must trip the molded case circuit breaker/switch disconnector.

The test button must be held down for at least two seconds. The design of the test button prevents unintentional actuation.

Note

The residual current device can be successfully tested only if it is connected to a voltage equal to at least 85% of the minimum rated operational voltage.

Resetting

If the residual current device trips the molded case circuit breaker/switch disconnector due to a high residual current or actuation of the test button, the <RESET> button on the RCD is released. At the same time, the trip alarm switch which is mechanically coupled with the <RESET> button also signals that a trip has occurred.

The <RESET> button is labeled with the letter "R".

The following actions must be taken in order to reset the residual current device and reclose the main contacts of the molded case circuit breaker:

1. Press the <RESET> button on the residual current device.
   The "tripped" signal at the signaling contacts is canceled, the residual current device is now reset.
2. Reset and switch on the molded case circuit breaker or switch disconnector.

Note

If the main contacts of the molded case circuit breaker/switch disconnector are closed before the residual current device has been reset, the molded case circuit breaker/switch disconnector will be tripped again immediately (approx. 0.8 s) by the residual current device. This also applies if the fault which leads to the trip has already been rectified.

Parameterization of the residual current device

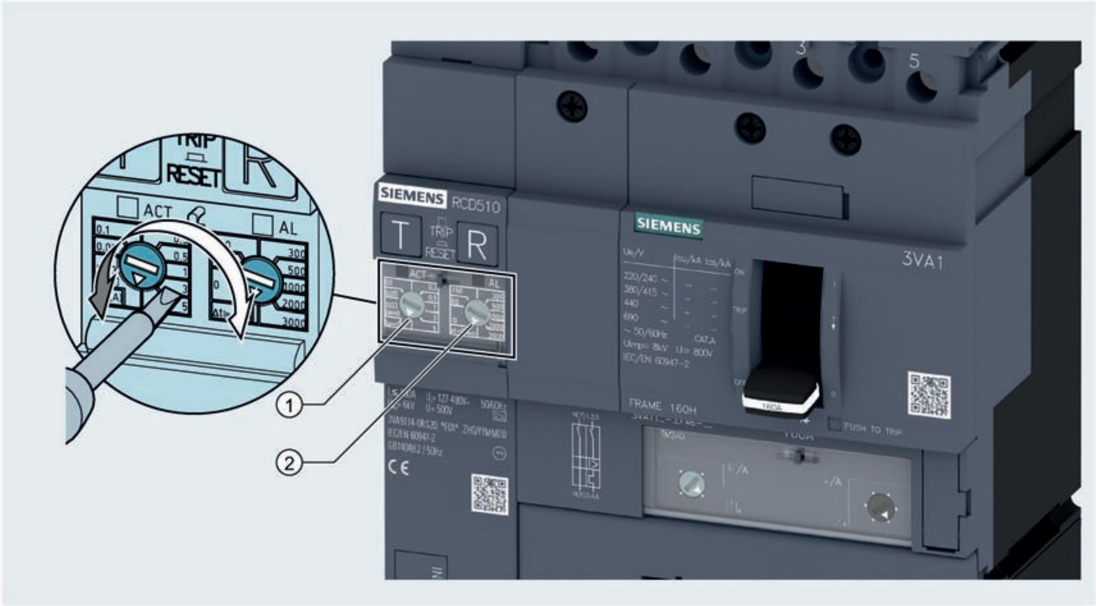

① Setting button for response current $I_{\Delta n}$

② Setting button for delay time Δt (RCD510 only)

Button for setting the response current $I_{\Delta n}$

The response current can be set in eight steps, ranging from 0.03 A to maximum 5 A. Each response current has a dedicated setting range. The corresponding response current is set as soon as the button is latched in the setting range.

If the white setting arrow is resting between two setting ranges, the residual current device is automatically set to 0.03 A for safety reasons.

If the response current is set to 0.03 A, the delay time setting Δt is deactivated and the breaker is tripped instantaneously. in order to afford personal protection in the case of direct contact.

Note

In order to protect personnel, it is necessary to seal the transparent protective cover so that the 30 mA setting range cannot be changed.

The factory setting for the response current is 0.03 A.

Button for setting the delay time Δt (RCD510 only)

The delay time on RCD510 units can be set in eight steps, ranging from 0 (instantaneous) to a maximum value of 3000 ms.

Each delay time has a dedicated setting range. The corresponding delay time is set as soon as the button is latched in the setting range.

If the white setting arrow is resting between two setting ranges, the residual current device trips instantaneously in response to residual currents.

The factory setting for the delay time is 0 ms.

The delay time is not adjustable on the RCD310. The RCD310 always trips instantaneously.

Possible procedure for setting the response current and the delay time

1. Switch off the molded case circuit breaker/switch disconnector.
2. Open the transparent protective cover over the setting buttons.
3. Adjust the setting values for response current and delay time on the residual current device to the maximum value in each case.
4. Switch on the molded case circuit breaker/switch disconnector.
   The LED labeled "ACT" on the residual current device now lights up, the residual current device is ready.
5. Reduce the setting for the response current until the LED labeled "AL" lights up.
   The residual current is now 30% higher than the response current setting.
6. By turning the setting button clockwise, set the next higher response current.
   The LED "AL" goes out, the correct response current is now set.
7. Set the required delay time.
8. Close the transparent protective cover over the setting buttons.
   The device is now fully parameterized.

Sealable protective covers of the residual current device

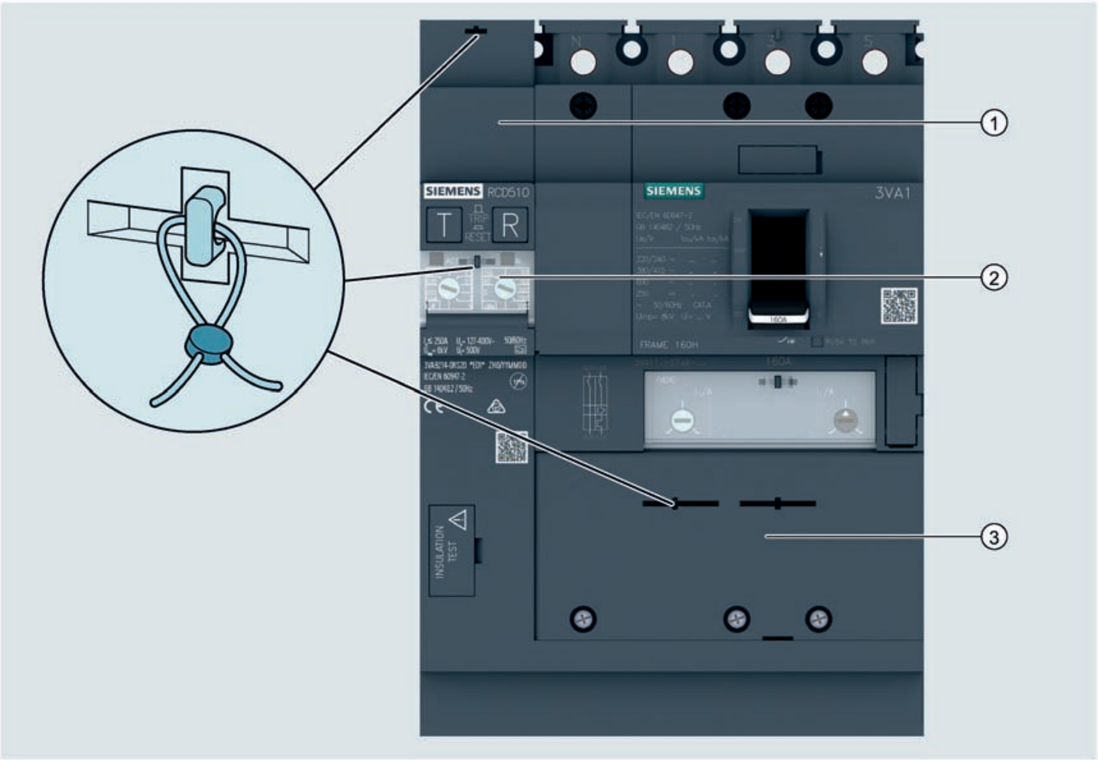

① Contact hazard protective cover over auxiliary contacts
② Transparent protective cover over setting buttons
③ Contact hazard protective cover over main current paths

Transparent protective cover over setting buttons

In order to prevent unauthorized access to the setting buttons for $I_{\Delta n}$ and Δt, the transparent cover over the settings buttons can be optionally sealed.

Note

In order to protect personnel, it is necessary to seal the transparent protective cover so that the 30 mA setting range cannot be changed.

Contact hazard protective cover over main current paths including sealing option

After the residual current device RCD310 or RCD510 has been mounted on the 3VA1 molded case circuit breaker or 3VA1 switch disconnector, a contact hazard protective cover is installed over the main current paths to protect against direct contact. This cover can be sealed optionally in order to block any attempt to dismantle the residual current device from the molded case circuit breaker/switch disconnector.

Terminals

Note

Cables for the following terminals must be routed separately from the main circuits. Their maximum cable length is 300 m.

A number of auxiliary contacts which perform different functions are located underneath a contact hazard protective cover:

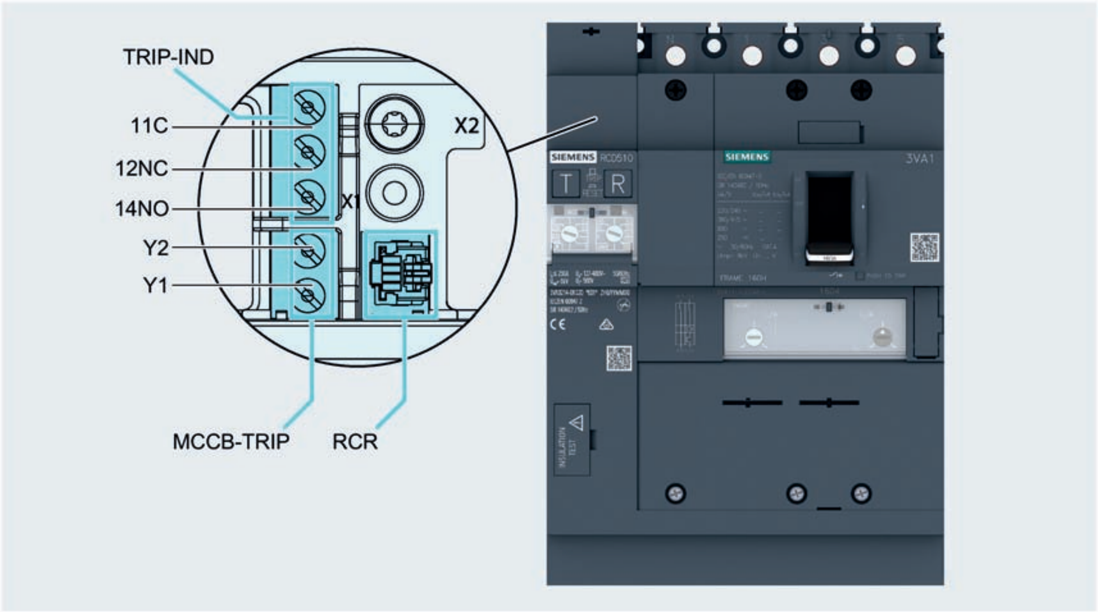

Alarm switches

TRIP-IND (TRIP INDICATOR)

A tripped signal can be output via the floating contact for display via a warning lamp, for example. This trip alarm switch operates as soon as the residual current exceeds the response current setting value and has therefore caused the residual current device to trip.

The standard trip alarm switch has changeover contacts and screw-type connections.

The terminal designations of the relevant contact are shown in the diagram below.

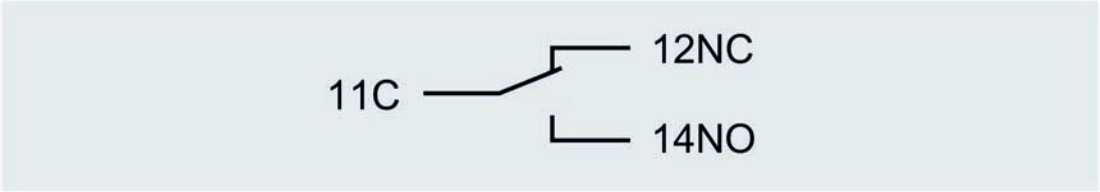

External control of the residual current release (RCR)

MCCB-TRIP

Although the RCR is utilized by the residual current device, it can also be accessed externally via a floating contact by means of the auxiliary contact MCCB-TRIP. The floating contact must be capable of switching a 5 mA current with a voltage supply of 24 V DC.

The RCR functions as a shunt trip, allowing the circuit breaker to be tripped by remote control. External tripping of the molded case circuit breaker or switch disconnector via the RCR does not affect the residual current device. In other words, neither the "tripped" display on the residual current device nor the auxiliary contacts for the "tripped" signal are activated in the event of an external trip.

It is not possible, however, to connect the contacts named above of several residual current devices in parallel.

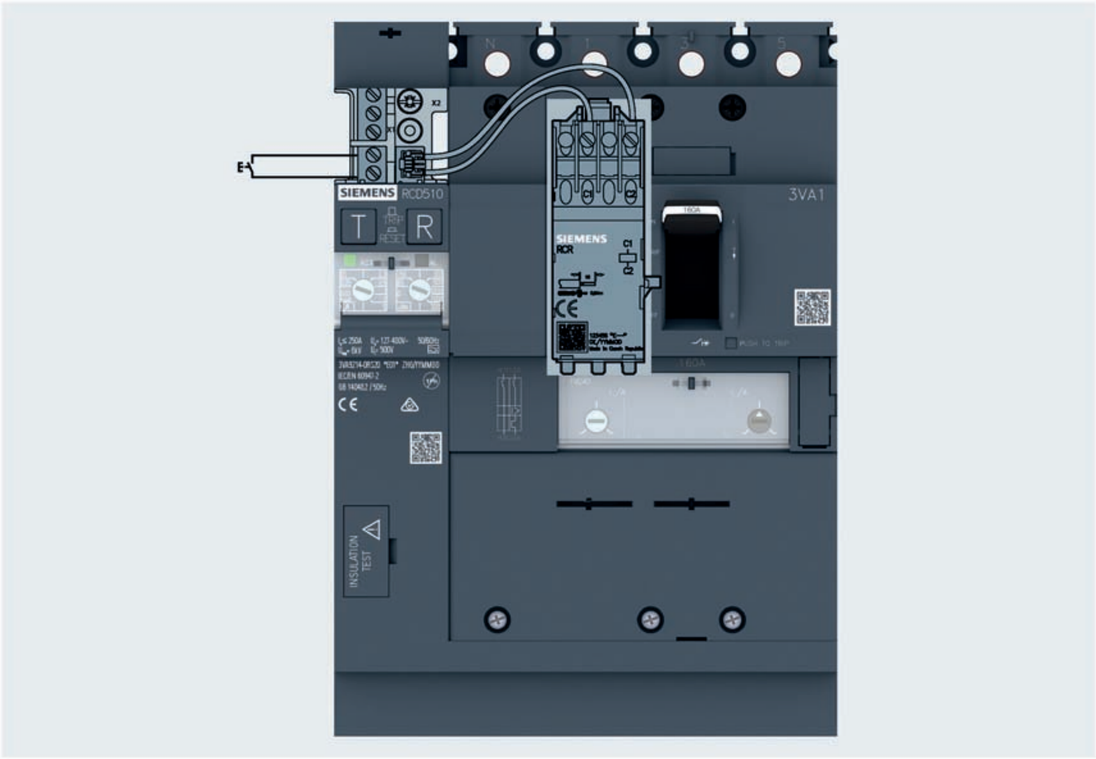

Status indicators

The table below illustrates the behavior of pre-alarm and tripped signals on RCD310 and RCD510 devices in response to various user actions and residual currents.

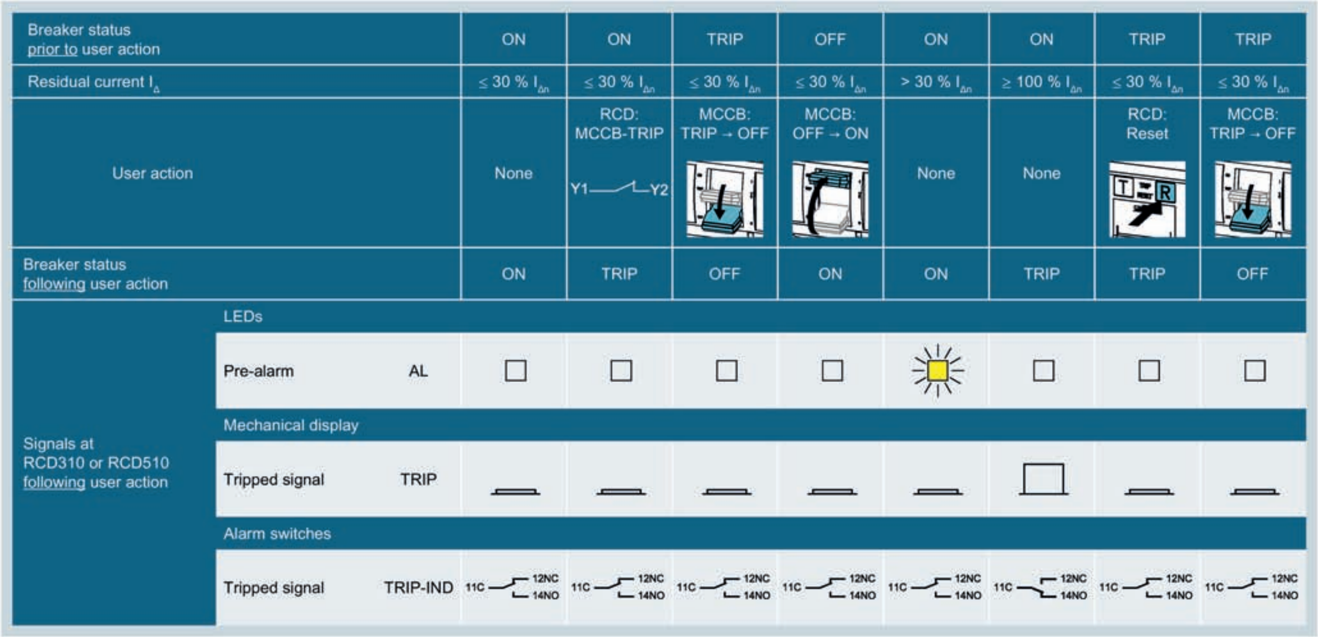

Breaker status prior to user action			ON	ON	TRIP	OFF	ON	ON	TRIP	TRIP
Residual current I_{Δ}			$\leq 30\ \%\ I_{\Delta n}$	$\leq 30\ \%\ I_{\Delta n}$	$\leq 30\ \%\ I_{\Delta n}$	$\leq 30\ \%\ I_{\Delta n}$	$> 30\ \%\ I_{\Delta n}$	$\geq 100\ \%\ I_{\Delta n}$	$\leq 30\ \%\ I_{\Delta n}$	$\leq 30\ \%\ I_{\Delta n}$
User action			None	RCD: MCCB-TRIP Y1 Y2	MCCB: TRIP → OFF	MCCB: OFF → ON	None	None	RCD: Reset T R	MCCB: TRIP → OFF
Breaker status following user action			ON	TRIP	OFF	ON	ON	TRIP	TRIP	OFF
Signals at RCD310 or RCD510 following user action	LEDs									
	Pre-alarm	AL	☐	☐	☐	☐	🟨	☐	☐	☐
	Mechanical display									
	Tripped signal	TRIP	▁	▁	▁	▁	▁	☐	▁	▁
	Alarm switches									
	Tripped signal	TRIP-IND	11C 12NC 14NO	11C 12NC 14NO	11C 12NC 14NO	11C 12NC 14NO	11C 12NC 14NO	11C 12NC 14NO	11C 12NC 14NO	11C 12NC 14NO

Terminal labeling and cable installation

Labeling of terminals

The labels for individual terminals are printed on the rear of the contact hazard protection cover for auxiliary contacts.

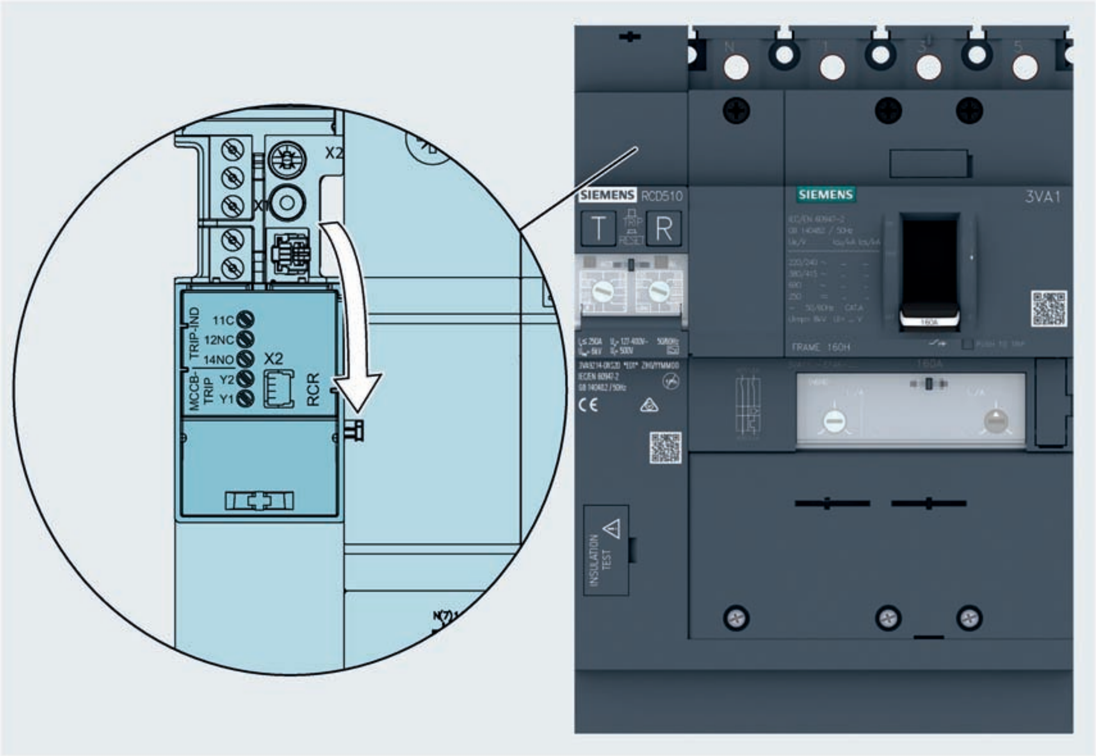

Cable installation

Cable ducts for bringing out cables are provided to the left and right on the residual current device.

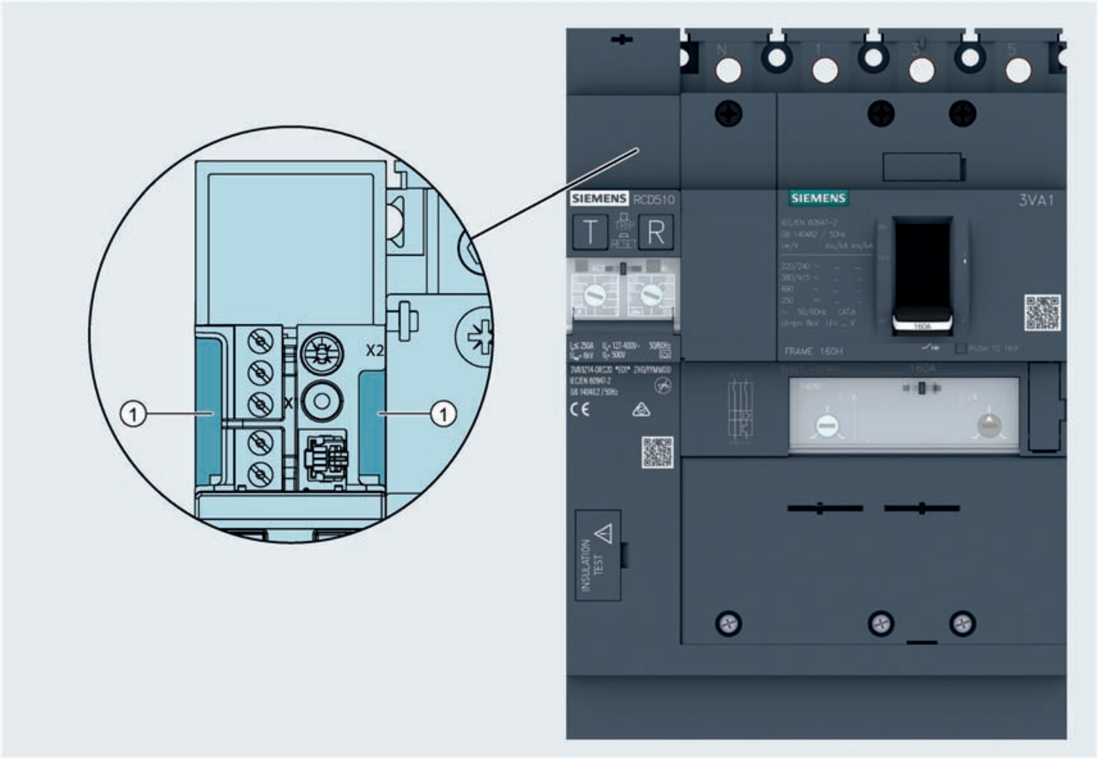

① Cable duct

Other labels on front panel

Approvals

The residual current device bears the CE mark. For an overview of all approvals, please refer to Appendix (Page 647).

For all queries relating to approvals, please contact Technical Support (Page 10).

Technical specifications

In ≤ …A:	Specifies the highest permissible rated operational current of the molded case circuit breaker/switch disconnector with which the residual current device may be combined.
Ue ~ …V:	Specifies the operating voltage range of the residual current device.
…Hz:	Specifies the operating frequency range of the residual current device.
∿	Denotes the response behavior to residual currents.

Installation

The side mounted residual current device is attached to the left-hand side of the molded case circuit breaker or switch disconnector. No tools are required:

1. Push the molded case circuit breaker/switch disconnector onto the residual current device along the guides at the top.
2. Push the molded case circuit breaker/switch disconnector backwards until its rear panel is flush with the rear panel of the residual current device.

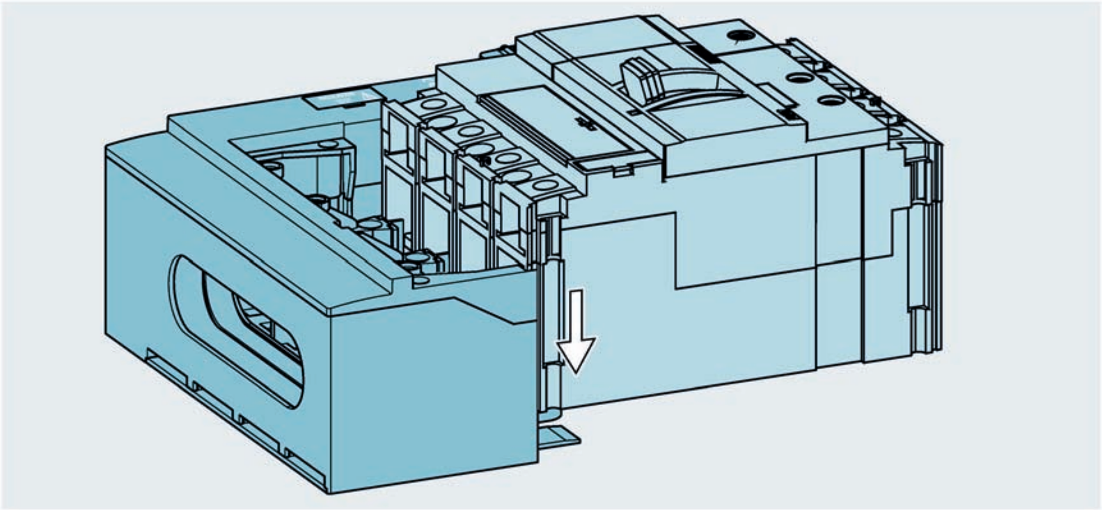

3. Place the contact hazard protective cover over the circuit breaker/RCD assembly.
4. Attach the assembly to a mounting plate using the mounting screws or mount it on a DIN rail adapter.

The side mounted residual current devices feature through-hole technology.

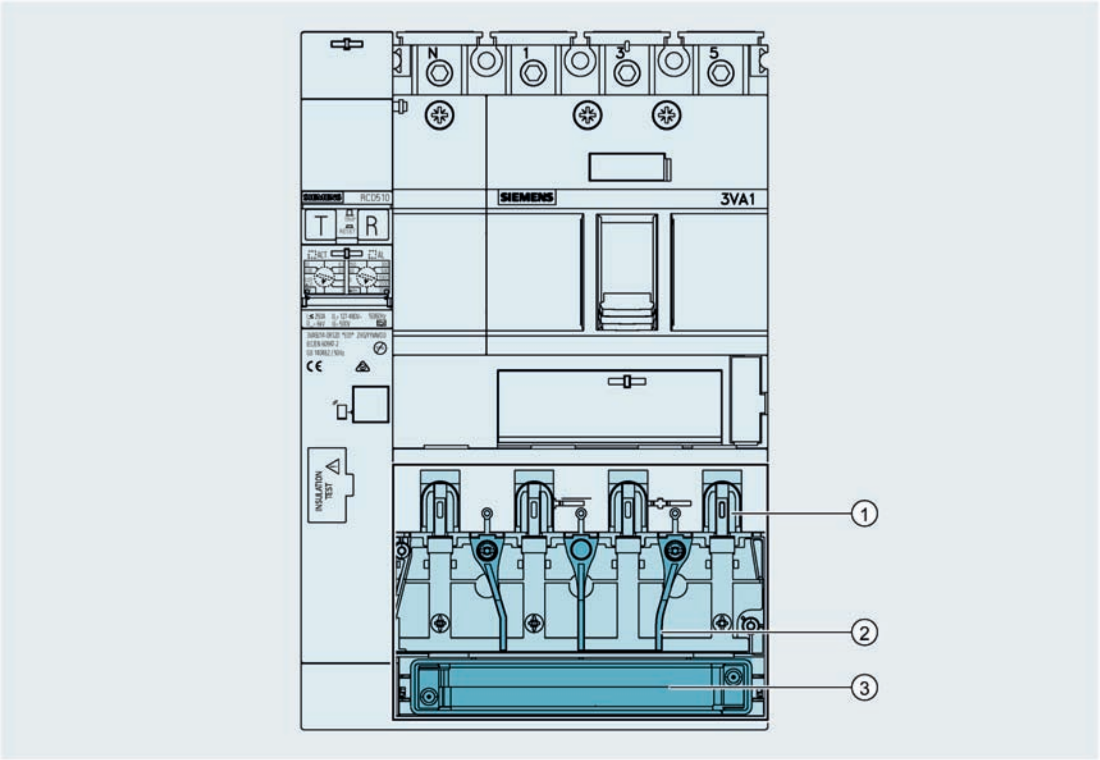

①	Box terminals of the molded case circuit breaker
②	Phase barriers
③	Summation current transformer

With this technology, the cables are simply guided through the summation current transformer ③ and connected directly to the box terminals ① of the molded case circuit breaker or switch disconnector.

The phase barriers ② not only ensure safe operation, but also serve as a guide for correct routing of cables.

Tripping

In the event of a fault, the side mounted residual current device employs a residual current release (RCR) to trip the molded case circuit breaker or switch disconnector. This release is installed in the accessory compartment to the left of the handle.

The RCR and the connecting cable are included in the scope of supply of the side mounted residual current device.

The release is connected to the "RCR" contacts on the residual current device via a plug-in connection and receives a trip command if the residual current reaches or exceeds the preset value.

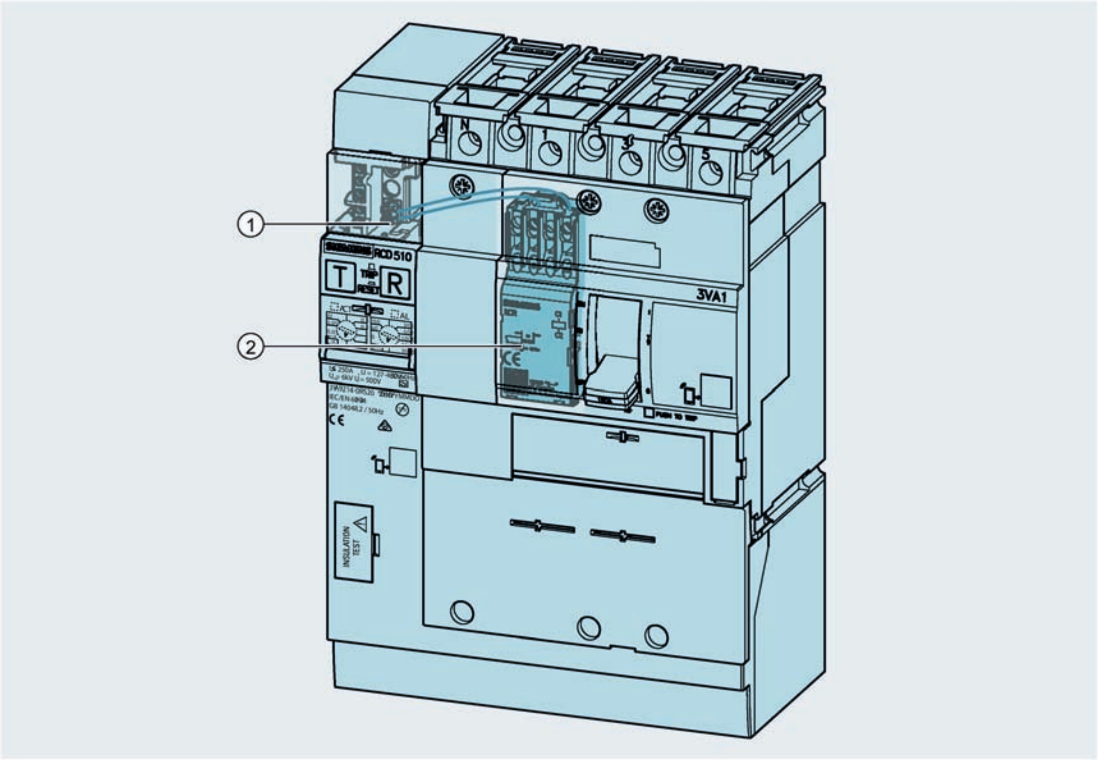

① Plug-in connection for RCR
② RCR

Use of the residual current device as a pure display unit

The RCD310 and RCD510 residual current devices can also operate as pure display units without a tripping function, i.e. they detect and signal residual currents, but do not trip the molded case circuit breaker or switch disconnector and therefore do not interrupt the circuit.

To operate the RCD310 or RCD510 purely as a display unit, the residual current release (RCR) and its connecting cable are not installed. The residual current device can perform all its normal functions, e.g. status signaling, in "display mode."

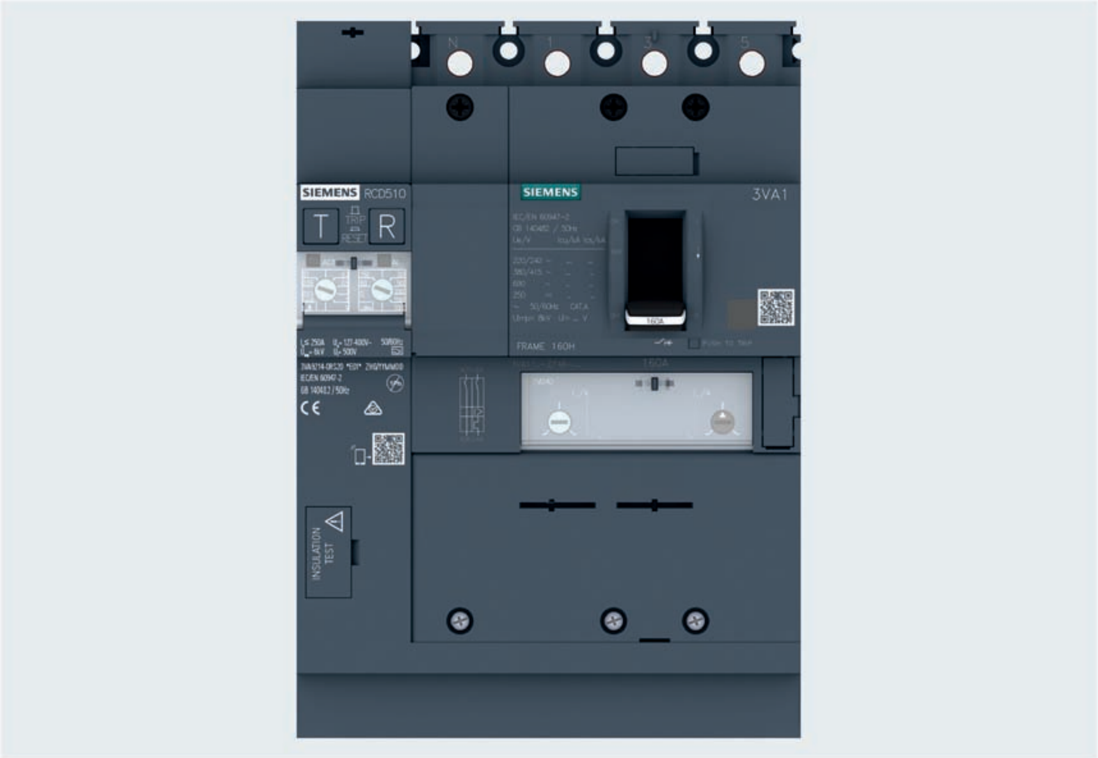

Note

Because the RCR and its connecting cable have not been installed, the LED "ACT" flashes continuously.

Function overview

The table below provides an overview of all the functions and data which are available in the residual current device environment:

Setting values			RCD310	RCD510	at residual current device	via electrical contacts
Response current	$I_{\Delta n}$	A	■	■	👁 ✎	
Delay time	Δt	ms		■	👁 ✎	
Status, diagnostics and maintenance						
Ready signal	ACT		■	■	👁	
Pre-alarm	AL		■	■	👁	
Trip	TRIP		■	■	👁 ☞	👁
Residual current device fault			■	■	👁	
Connection to RCR interrupted			■	■	👁	
Reset functions			■	■	☞	
Identification						
Identification data of residual current device	Order No.		■	■	👁	
	Production date		■	■	👁	
	Serial number		■	■	👁	
Hardware version			■	■	👁	

👁	Value can be read
✎	Value can be edited
☞	Commands

4.8.2.2 Loadside residual current devices Basic RCD320 and Basic RCD520

Loadside residual current devices are also available to order for 3VA1 molded case circuit breakers.

Front view of Basic RCD320 and Basic RCD520

RCD320

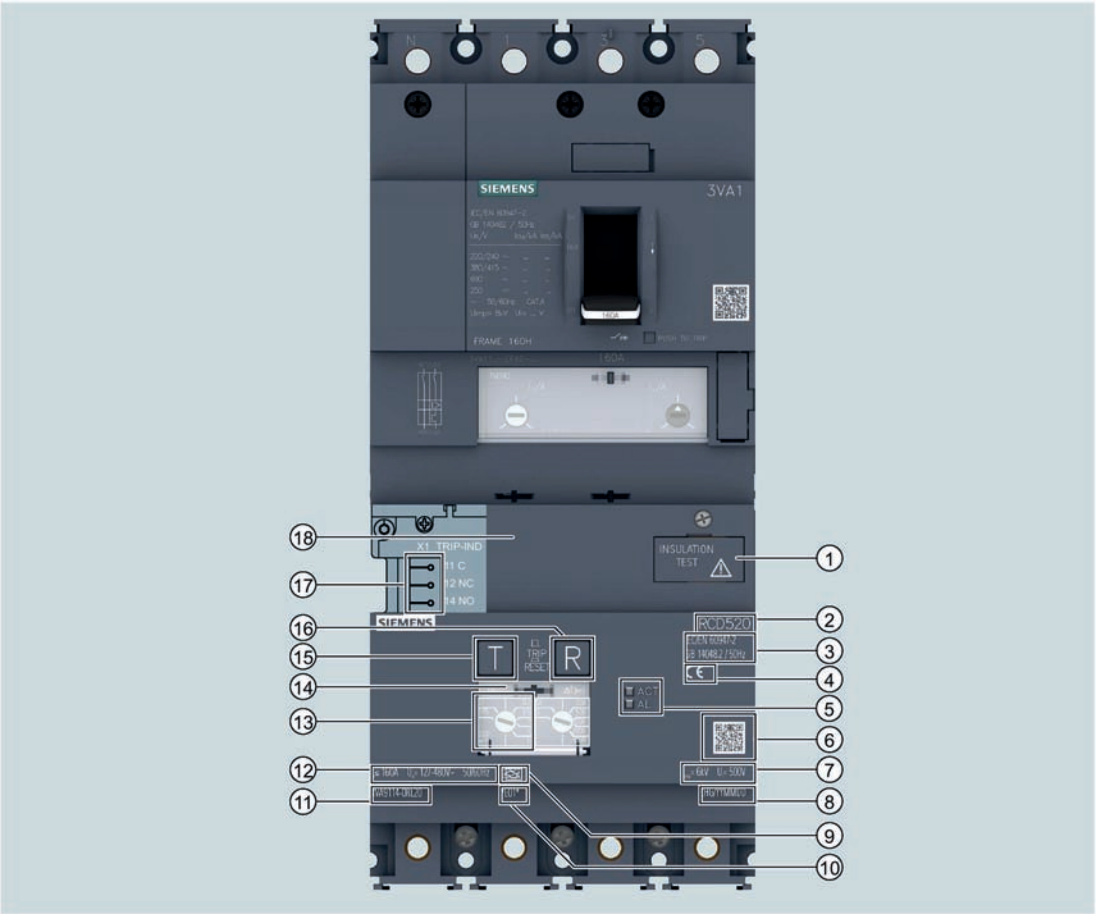

① Circuit breaker
② Type designation
③ Standard
④ Approvals
⑤ LED: ACTIVE and pre-alarm
⑥ Knowledge Manager
⑦ Rated insulation voltage and rated impulse strength
⑧ Location and date of manufacture
⑨ Device type
⑩ Product version
⑪ Article number
⑫ Maximum rated operational current, rated operational voltage and frequency
⑬ Setting button for response current
⑭ Transparent protective cover over setting buttons
⑮ Test button (test device)
⑯ RESET button / tripped display
⑰ Auxiliary contacts
⑱ Contact hazard protective cover over main current paths with sealing option

RCD520

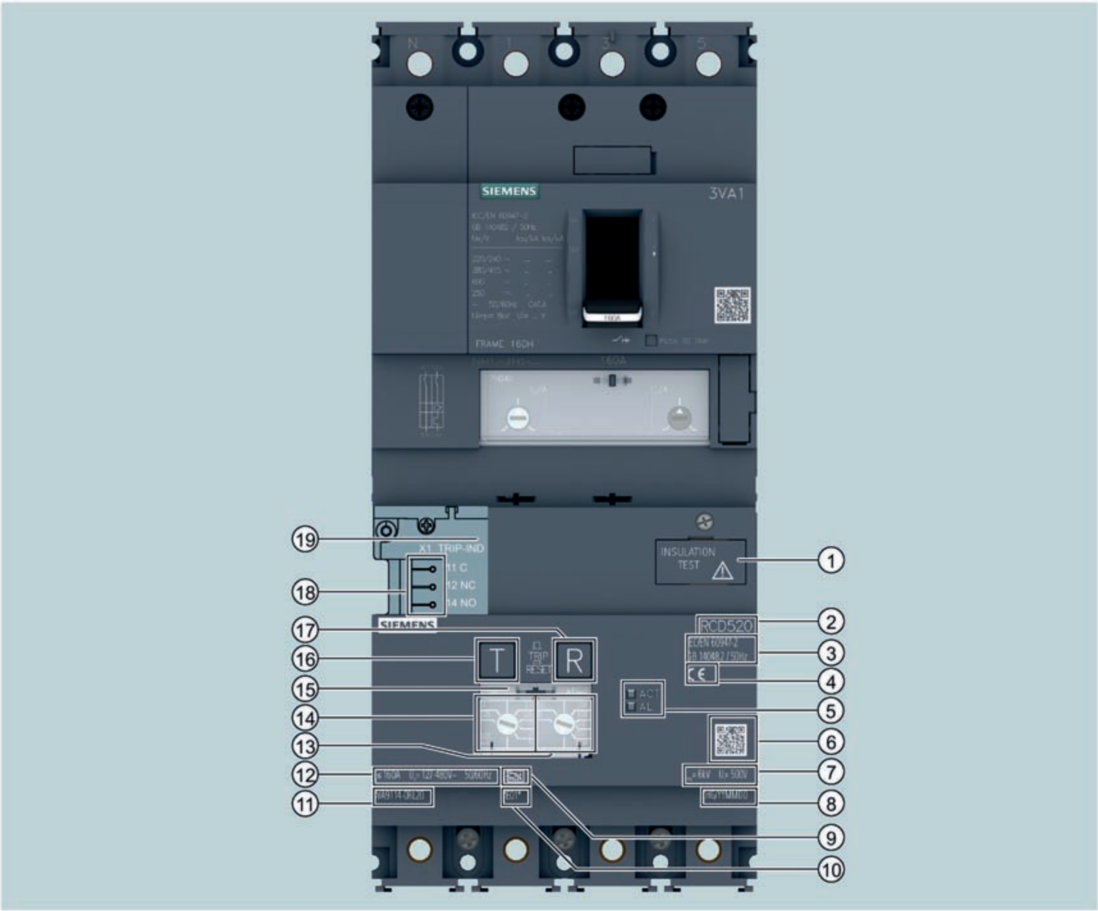

① Circuit breaker
② Type designation
③ Standard
④ Approval
⑤ LED: ACTIVE and pre-alarm
⑥ Knowledge Manager
⑦ Rated insulation voltage and rated impulse strength
⑧ Location and date of manufacture
⑨ Device type
⑩ Product version
⑪ Article number
⑫ Maximum rated operational current, rated operational voltage and frequency
⑬ Setting button for delay time
⑭ Setting button for response current
⑮ Transparent protective cover over setting buttons
⑯ Test button (test device)
⑰ RESET button / tripped display
⑱ Auxiliary contacts
⑲ Contact hazard protective cover over main current paths with sealing option

Description of front panel view

Display elements

"Ready" signals and alarms

- "Ready" signal of the residual current device:
  The LED labeled "ACT" stands for ACTIVE and lights up when the residual current device is ready.

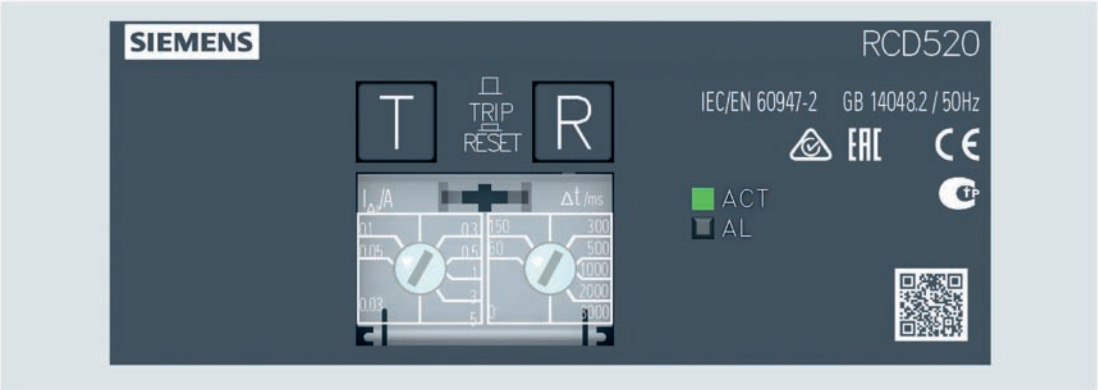

- Pre-alarm:
  Both the Basic RCD320 and the Basic RCD520 feature an alarm LED labeled "AL" (pre-alarm) which lights up promptly to indicate potential shutdown of the installation due to residual current.

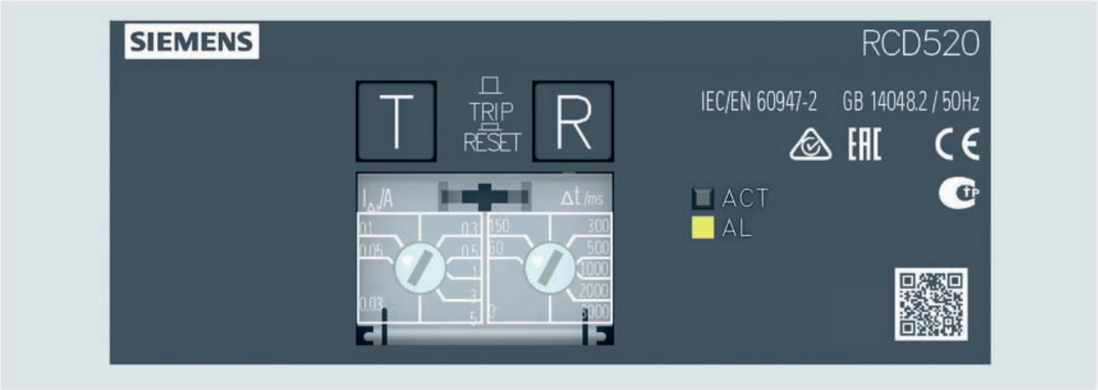

LED displays

LED		Status	Description
☐	ACT	Off	Residual current device is not in operation
🟩	ACT	Flashing	Residual current device is malfunctioning
🟩	ACT	On	Residual current device is operating normally
🟩	ACT	On	The residual current I_{Δ} is higher than 30 % of the set response current ($I_{\Delta n}$ value)
🟨	AL	On	
🟩	ACT	Flashing	Possible causes: - The residual current device is defective - The white setting arrow of the $I_{\Delta n}$ or Δt setting button is resting between two setting ranges
🟨	AL	Flashing	

Tripped display

The <RESET> button is not only used to reset the residual current device, but also as a mechanical indication that the unit has "tripped". If a residual current is detected or the button <TEST> is pressed, the button <RESET> is automatically released and so signals that the residual current device has tripped. Even when the residual current device is at zero potential, the <RESET> remains in the "TRIP" position.

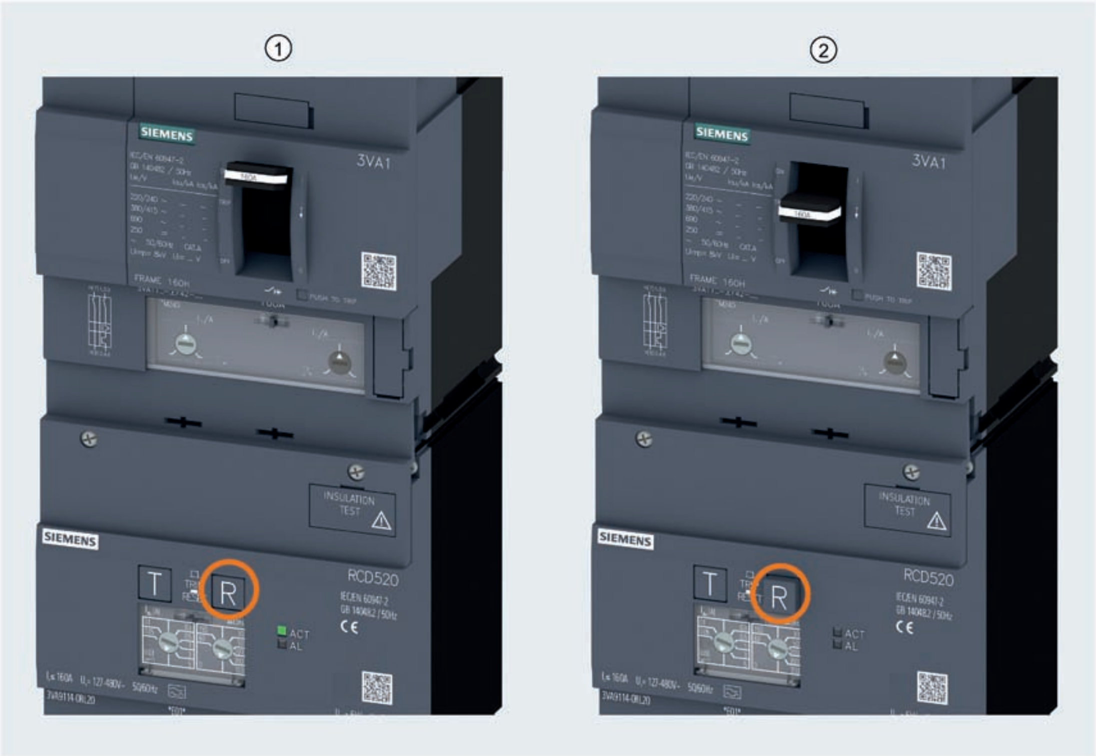

① Residual current device is operating normally and has not tripped
② Residual current device has tripped

Operator controls

Insulation tests

It is absolutely essential to isolate the evaluation electronics circuit while insulation tests are in progress in order to protect the circuit against potential damage on the one hand and to prevent detection of insulation faults due to the power pack on the other. This is done simply by withdrawing (15 - 17 mm) the circuit breaker which is anchored in the enclosure.

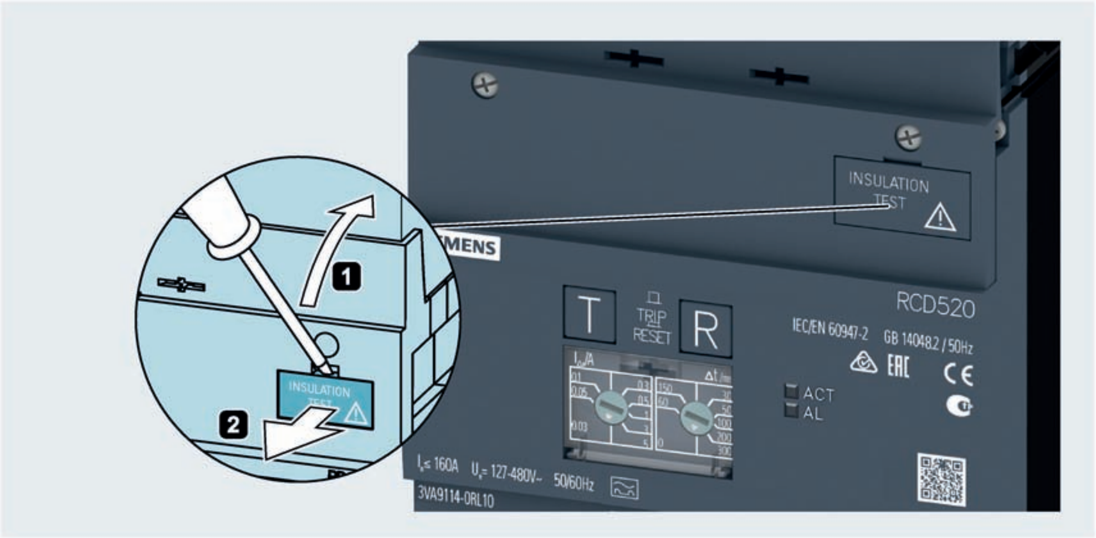

Disconnection of the main conductor connections is thus unnecessary. On completion of the tests, the circuit breaker must be pushed back into position before the residual current device is commissioned.

Testing and resetting the residual current device

Testing

Depending on operating conditions, the test button on the front panel of the residual current device should be pressed in order to function-test the device. The test button is labeled with the letter "T". If the test button is pressed, the device is tested immediately irrespective of the current delay time setting.

If the test button is pressed, a residual current is simulated on a test winding attached to the summation current transformer. If the residual current device is functioning properly, it must trip the molded case circuit breaker.

The test button must be held down for at least 2 seconds. The design of the test button prevents unintentional actuation.

Note

The residual current device can be successfully tested only if it is connected to a voltage equal to at least 85% of the minimum rated operational voltage.

Resetting

If the residual current device trips the molded case circuit breaker due to a high residual current or actuation of the test button, the <RESET> button on the RCD is released ("RCD" mode must be selected). At the same time, the trip alarm switch which is mechanically coupled with the <RESET> button also signals that a trip has occurred.

The <RESET> button is labeled with the letter "R".

The following actions must be taken in order to reset the residual current device and reclose the main contacts of the molded case circuit breaker:

1. Press the <RESET> button on the residual current device.
   The "tripped" signal at the signaling contacts is canceled, the residual current device is now reset.
2. Reset and switch on the molded case circuit breaker.

Note

The molded case circuit breaker cannot be switched on before the <RESET> button on the residual current device has been actuated and a residual current is no longer present ($I_{\Delta n} > I_{\Delta}$).

Parameterization of the residual current device

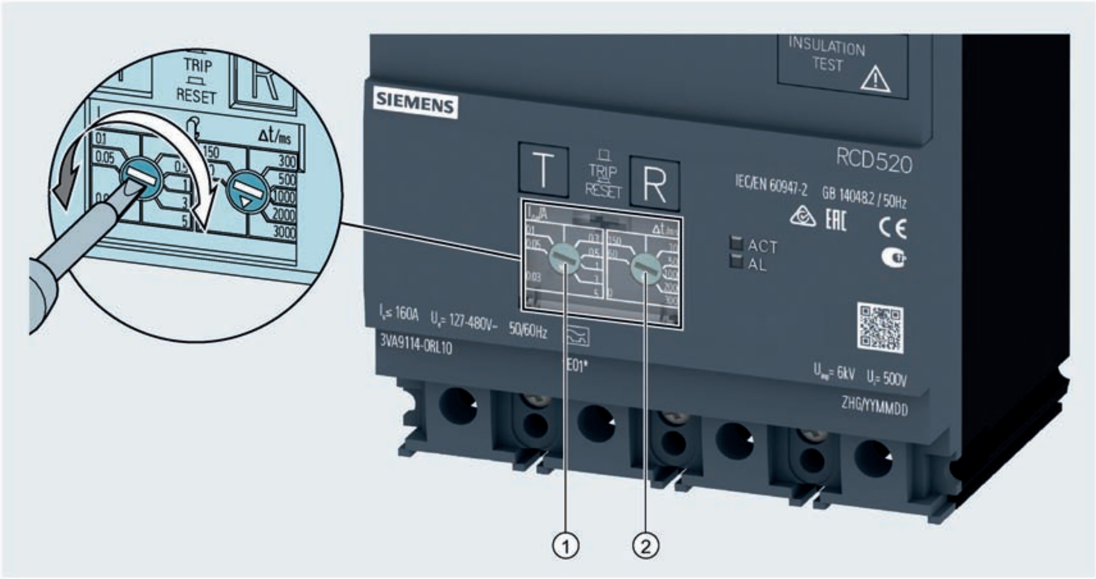

① Setting button for response current $I_{\Delta n}$

② Setting button for delay time Δt (RCD520 only)

Button for setting the response current $I_{\Delta n}$

The response current can be set in eight steps, ranging from 0.03 A to maximum 5 A. Each response current has a dedicated setting range. The corresponding response current is set as soon as the button is latched in the setting range.

If the white setting arrow is resting between two setting ranges, the residual current device is automatically set to 0.03 A for safety reasons.

If the response current is set to 0.03 A, the delay time setting is deactivated and the breaker is tripped instantaneously in order to afford personal protection in the case of direct contact.

Note

In order to protect personnel, it is necessary to seal the transparent protective cover so that the 30 mA setting range cannot be changed.

The factory setting for the response current is 0.03 A.

Button for setting the delay time Δt (RCD520 only)

The delay time on the RCD520 residual current device can be set in eight steps, ranging from 0 (instantaneous) to a maximum value of 3000 ms.

Each delay time has a dedicated setting range. The corresponding delay time is set as soon as the button is latched in the setting range.

If the white setting arrow is resting between two setting ranges, the residual current device trips instantaneously in response to residual currents.

The factory setting for the tripping delay is 0 ms.

The delay time is not adjustable on the RCD320. The RCD320 always trips instantaneously.

Possible procedure for setting the response current and the delay time

1. Switch off the molded case circuit breaker.
2. Open the transparent protective cover over the setting buttons.
3. Adjust the setting values for response current and delay time on the residual current device to the maximum value in each case.
4. Switch on the molded case circuit breaker.
   The LED labeled "ACT" on the residual current device now lights up, the residual current device is ready.
5. Reduce the setting for the response current until the LED labeled "AL" lights up.
   The residual current is now 30% higher than the response current setting.
6. By turning the setting button clockwise, set the next higher response current.
   The LED "AL" goes out, the correct response current is now set.
7. Set the required delay time.
8. Close the transparent protective cover over the setting buttons.
   The device is now fully parameterized.

Sealable protective covers of the residual current device

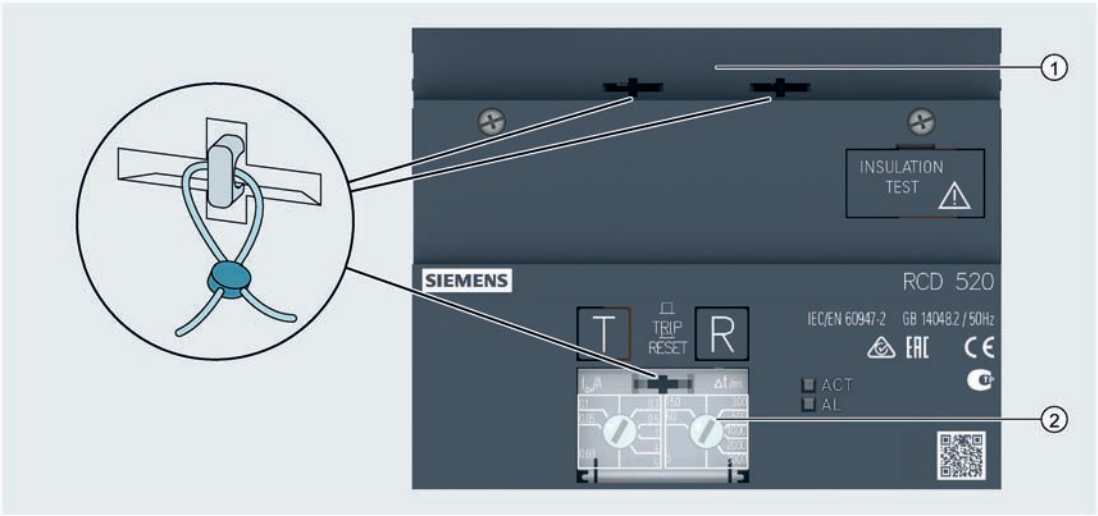

① Contact hazard protective cover over main current paths and auxiliary contacts

② Transparent protective cover over setting buttons

Transparent protective cover over setting buttons

In order to prevent unauthorized access to the setting buttons for $I_{\Delta n}$ and Δt, the transparent cover over the settings buttons can be optionally sealed.

Note

In order to protect personnel, it is necessary to seal the transparent protective cover so that the 30 mA setting range cannot be changed.

Contact hazard protective cover over main current paths and auxiliary contacts including sealing option

After the residual current device RCD320 or RCD520 has been mounted on the 3VA1 molded case circuit breaker, a contact hazard protective cover is installed over the main current paths to protect against direct contact. This cover can be sealed optionally in order to block any attempt to dismantle the residual current device from the molded case circuit breaker.

Terminals

Note

Cables for the following terminals must be routed separately from the main circuits. Their maximum cable length is 300 m.

A number of auxiliary contacts which perform different functions are located underneath the contact hazard protective cover:

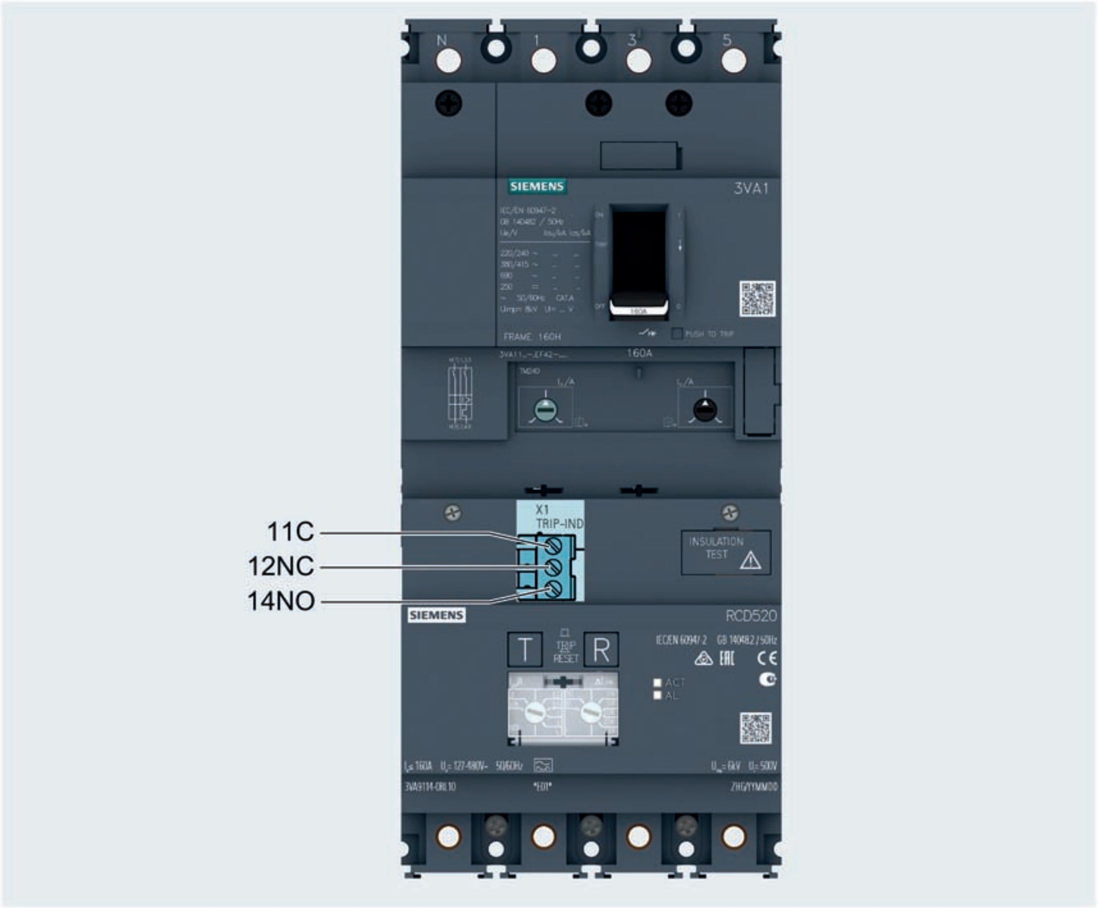

Alarm switch

TRIP-IND (TRIP INDICATOR)

A tripped signal can be output via the floating contact for display via a warning lamp, for example. This trip alarm switch operates as soon as the residual current exceeds the response current setting value and has therefore caused the residual current device to trip.

The standard trip alarm switch has changeover contacts and screw-type connections.

The terminal designations of the relevant contact are shown in the diagram below.

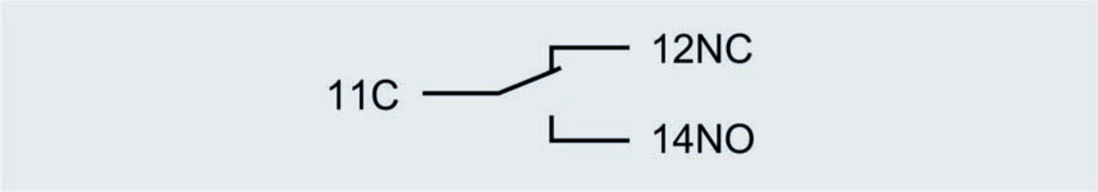

Status indicators

The table below illustrates the behavior of pre-alarm and tripped signals on RCD320 and RCD520 devices in response to various user actions and residual currents.

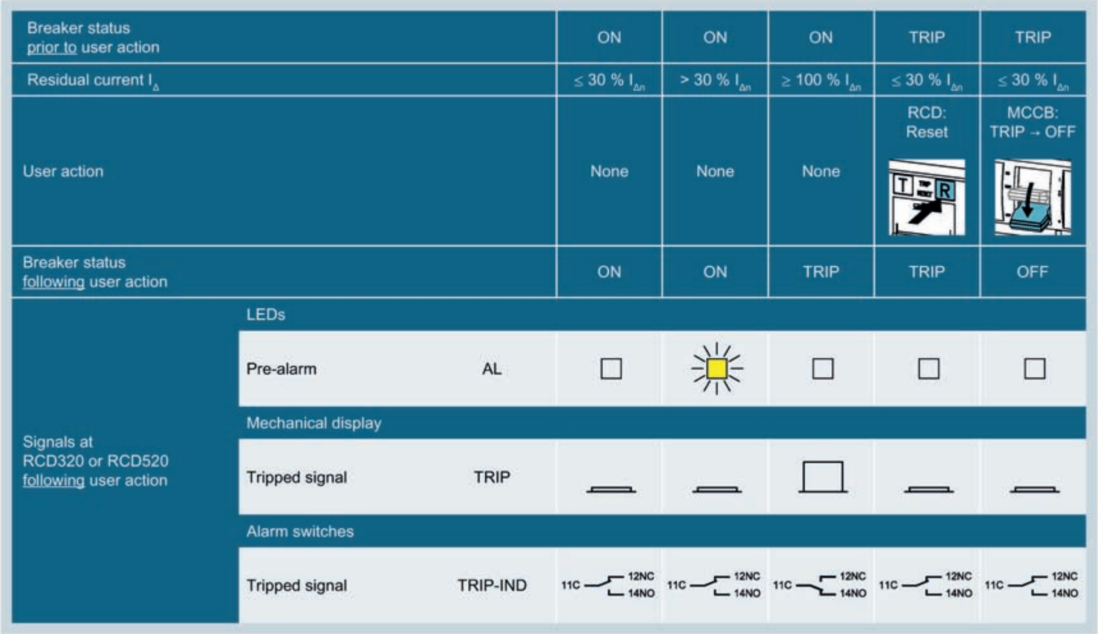

Breaker status prior to user action			ON	ON	ON	TRIP	TRIP
Residual current I_Δ			$\leq$ 30 % $I_{\Delta n}$	> 30 % $I_{\Delta n}$	$\geq$ 100 % $I_{\Delta n}$	$\leq$ 30 % $I_{\Delta n}$	$\leq$ 30 % $I_{\Delta n}$
User action			None	None	None	RCD: Reset	MCCB: TRIP → OFF
Breaker status following user action			ON	ON	TRIP	TRIP	OFF
Signals at RCD320 or RCD520 following user action	LEDs						
	Pre-alarm	AL	☐	☼	☐	☐	☐
	Mechanical display						
	Tripped signal	TRIP	▁	▁	☐	▁	▁
	Alarm switches						
	Tripped signal	TRIP-IND	11C 12NC 14NO	11C 12NC 14NO	11C 12NC 14NO	11C 12NC 14NO	11C 12NC 14NO

Cable installation

Cable ducts for bringing out cables are provided to the left and right on the residual current device.

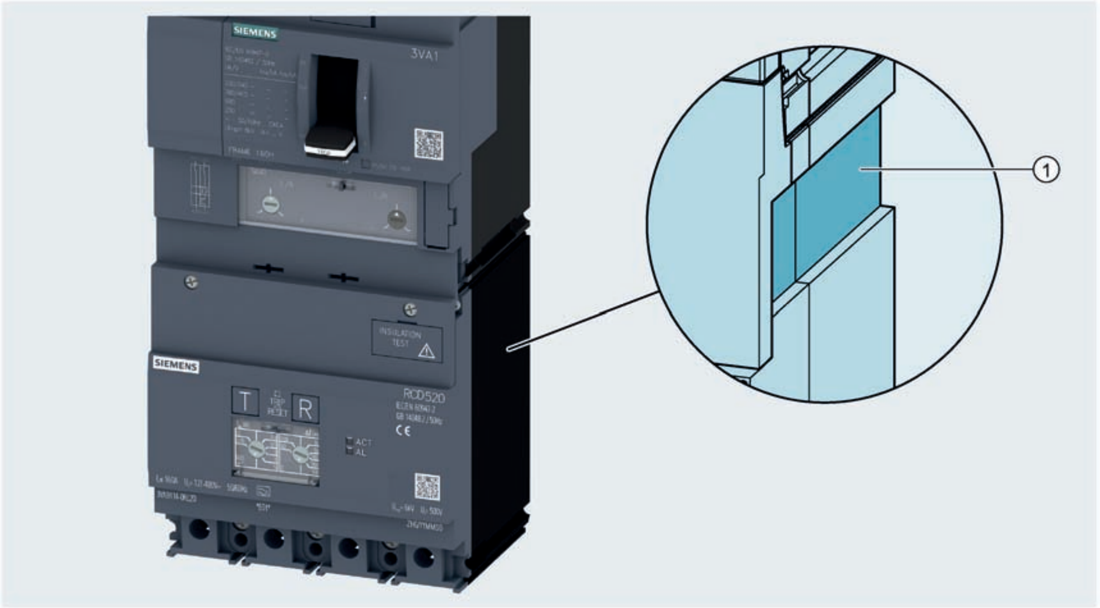

① Cable duct

Other labels on front panel

Approvals

The residual current device bears the CE mark. For an overview of all approvals, please refer to Appendix (Page 647).

For all queries relating to approvals, please contact Technical Support (Page 10).

Technical specifications

In ≤ …A:	Specifies the highest permissible rated operational current of the molded case circuit breaker with which the residual current device may be combined.
Ue ~ …V:	Specifies the operating voltage range of the residual current device.
…Hz:	Specifies the operating frequency range of the residual current device.
∿	Denotes the response behavior to residual currents.

Installation

Installation

Regardless of the type of connection technology installed on the 3VA1 molded case circuit breaker, the residual current devices RCD320 and RCD520 are mounted on the load side (i.e. beneath the thermal-magnetic trip unit) of the breaker:

1. Dismantle the loadside connection components of the molded case circuit breaker and install the supplied connection components for the residual current device.
2. Insert the residual current device into the T slots of the molded case circuit breaker.

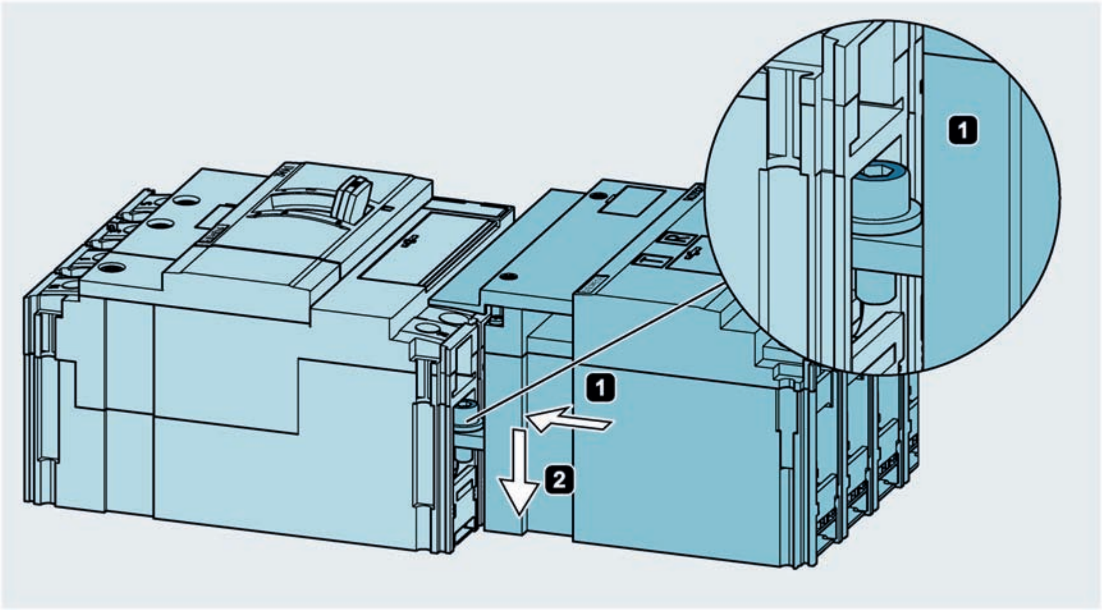

3. Push the residual current device backwards until its rear panel is flush with the rear panel of the molded case circuit breaker.
4. Screw the molded case circuit breaker to the residual current device. Special connecting screws are provided on the line side of the residual current device for this purpose.
5. Place a contact hazard protective cover over the circuit breaker/RCD assembly.
6. Reinstall the loadside connection components of the molded case circuit breaker at the outgoing feeder end of the residual current device.
7. Attach the assembly to a mounting plate using the mounting screws.

Note

Since the outgoing feeder end of the residual current device has exactly the same connection contours as the 3VA1 molded case circuit breaker, all connection accessories, e.g. phase barrier, terminal cover, can also be mounted on the residual current device.

Tripping

The molded case circuit breaker is tripped by means of a direct-acting tappet which engages in the breaker mechanism from the residual current device. The electromagnetic trip unit is integrated in the residual current device.

Function overview

The table below provides an overview of all the functions and data which are available in the residual current device environment:

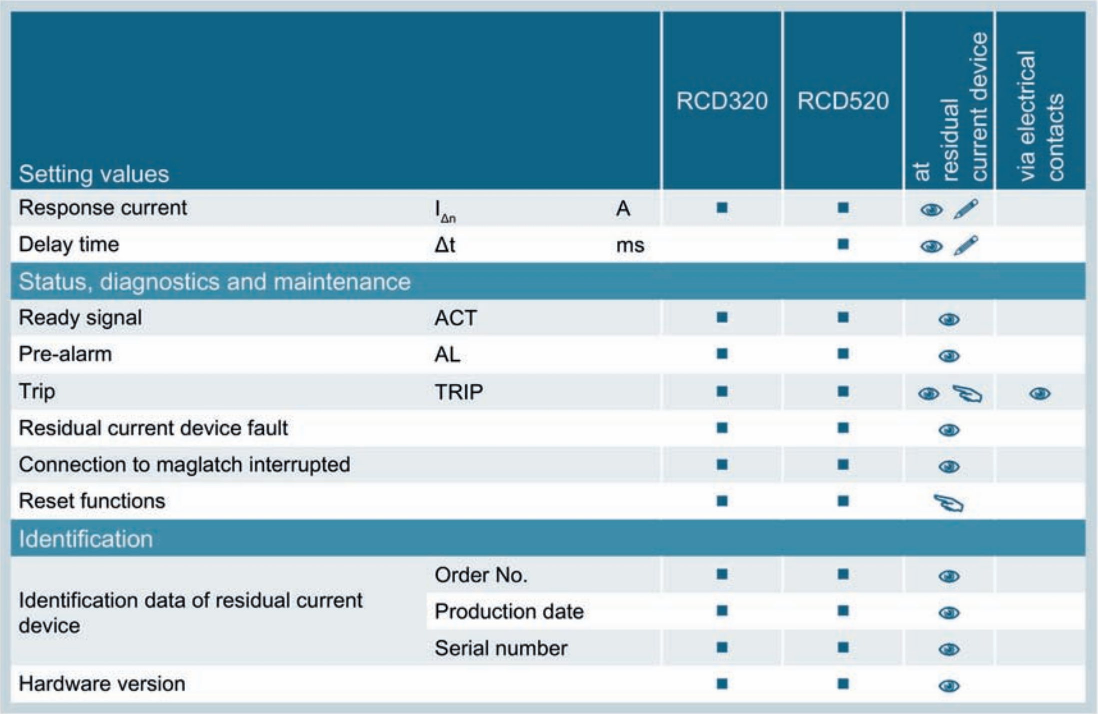

Setting values			RCD320	RCD520	at residual current device	via electrical contacts
Response current	$I_{\Delta n}$	A	■	■	👁 ✎	
Delay time	Δt	ms		■	👁 ✎	
Status, diagnostics and maintenance						
Ready signal	ACT		■	■	👁	
Pre-alarm	AL		■	■	👁	
Trip	TRIP		■	■	👁 ☞	👁
Residual current device fault			■	■	👁	
Connection to maglatch interrupted			■	■	👁	
Reset functions			■	■	☞	
Identification						
Identification data of residual current device	Order No.		■	■	👁	
	Production date		■	■	👁	
	Serial number		■	■	👁	
Hardware version			■	■	👁	

👁	Value can be read
✎	Value can be edited
☞	Commands

4.8.2.3 Loadside residual current device Basic RCD520B

Front view of the Basic RCD520B

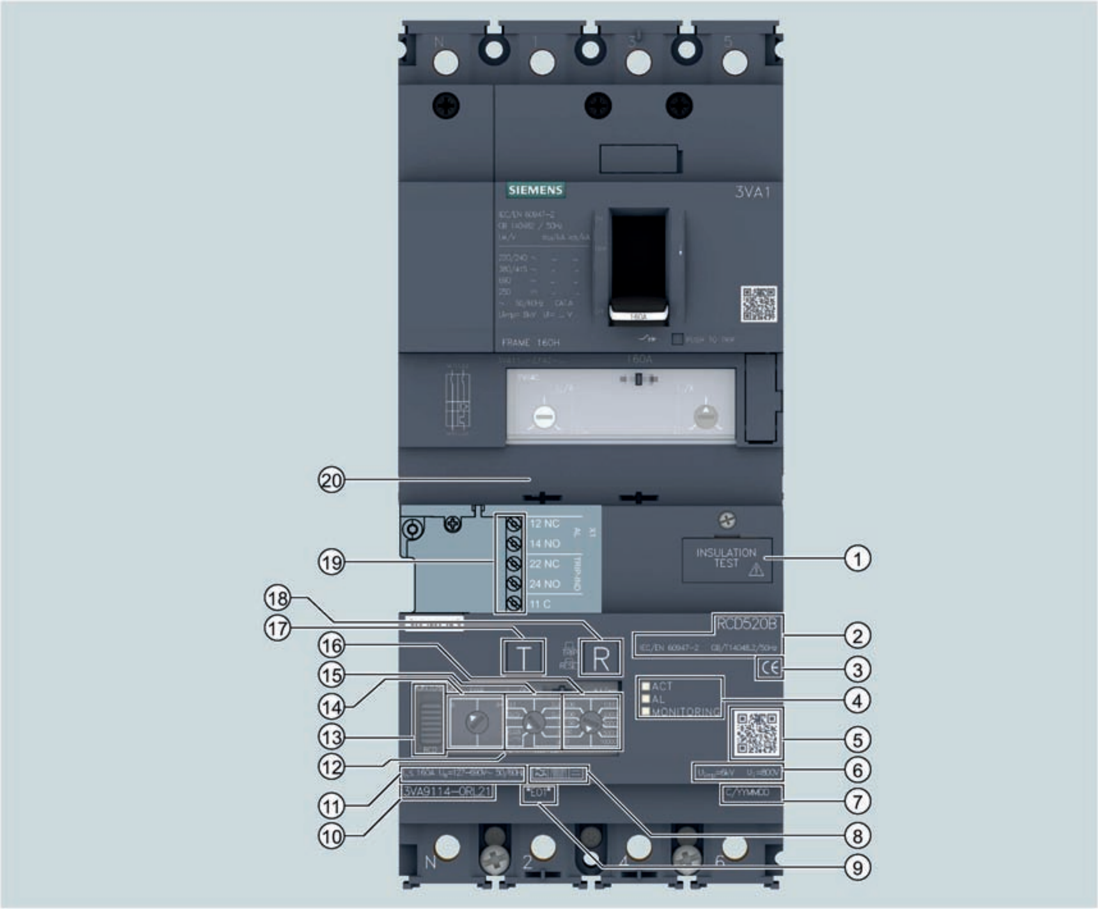

① Circuit breaker
② Type designation and standard
③ Approvals
④ LED: ACTIVE, pre-alarm and MONITORING
⑤ Knowledge Manager
⑥ Rated insulation voltage and rated impulse strength
⑦ Location and date of manufacture
⑧ Device type
⑨ Product version
⑩ Article number
⑪ Maximum rated operational current, rated operational voltage and frequency
⑫ Transparent protective cover over setting buttons
⑬ Selection slide switch for MONITORING / RCD mode
⑭ Button for setting tripping characteristic type B / type B+
⑮ Setting button for response current
⑯ Setting button for delay time
⑰ Test button (test device)
⑱ RESET button / tripped display
⑲ Auxiliary contacts
⑳ Contact hazard protective cover over main current paths with sealing option

Description of front panel view

Display elements

"Ready" signal, alarms and monitoring

- "Ready" signal of the residual current device:
  The LED labeled "ACT" stands for ACTIVE and lights up when the residual current device is ready to operate.

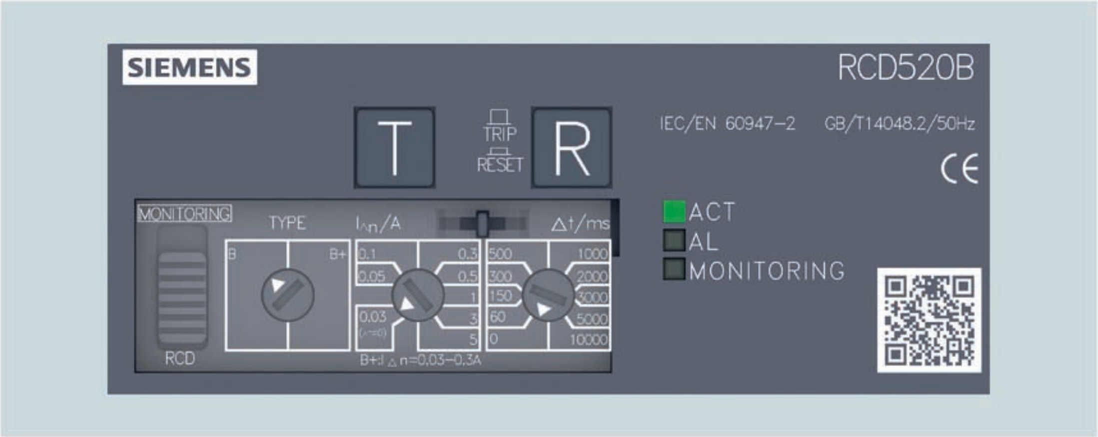

- Pre-alarm:
  The Basic RCD520B features an alarm LED labeled "AL" which lights up promptly to indicate potential shutdown of the installation due to residual current.

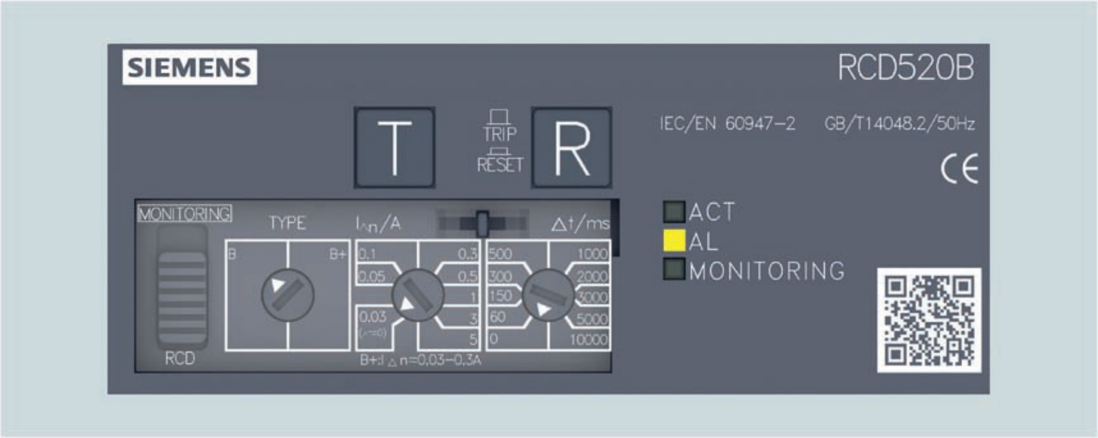

- Monitoring:
  The "MONITORING" LED indicates the operating mode of the RCD520B.

  When the selection slide switch is set to "MONITORING", the "MONITORING" LED is lit and the "ACT" LED flashes. RCD520B Basic functions purely as a display unit without a tripping function.

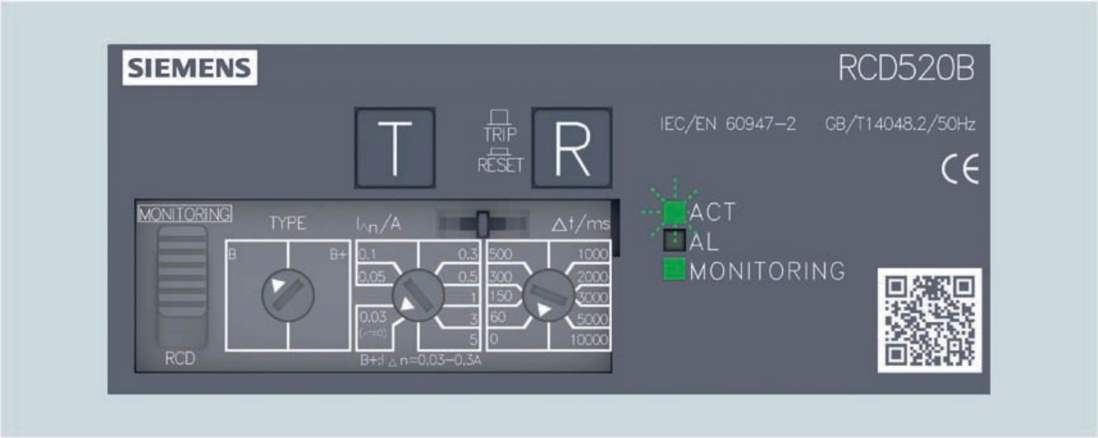

LED displays

LED	Status	Description
☐ ACT	Off	Residual current device not in operation
◩ ACT	Flashing	Fault in residual current device
🟩 ACT	On	Residual current device is in normal operation (protection mode)
☐ AL	Off	Residual current I_{Δ} is less than or equal to 30% of the set response current ($I_{\Delta n}$ value)
🟨 AL	On	Residual current I_{Δ} is greater than or equal to 30% of the set response current ($I_{\Delta n}$ value)
◩ ACT	Flashing	Residual current device is operating purely as display unit (monitoring mode)
🟩 MONITORING	On	
🟩 ACT	On	Residual current device is operating in protection mode (RCD functionality)
☐ MONITORING	Off	
◩ ACT	Flashing	Possible causes: - Residual current device is defective - The white arrow of a setting button is between two setting ranges
◩ AL	Flashing	
◩ MONITORING	Flashing	

Tripped display

In RCD mode, the <RESET> button is used not only to reset the residual current device, but also as a mechanical indication that the unit has "tripped". If a residual current is detected or the button <TEST> is pressed, the button <RESET> is automatically released and so signals that the residual current device has tripped. Even when the residual current device is at zero potential, the <RESET> remains in the "TRIP" position.

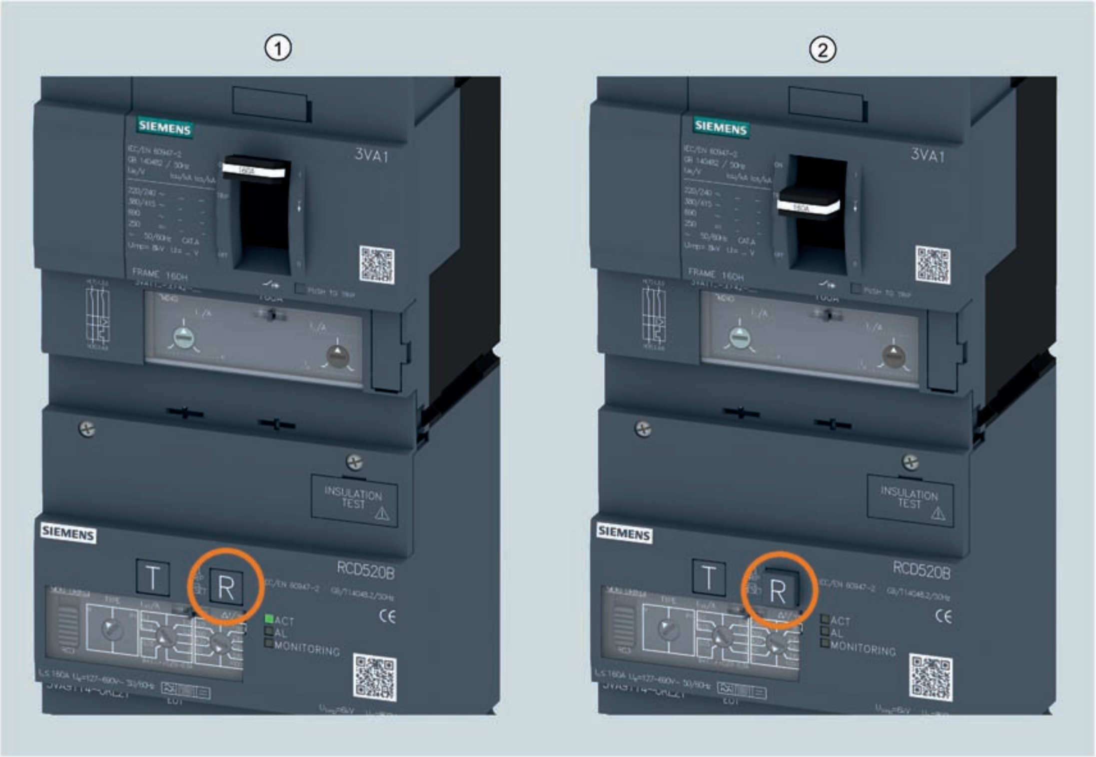

① Residual current device is operating normally and has not tripped

② Residual current device has tripped

Operator controls

Insulation tests

It is absolutely essential to isolate the evaluation electronics circuit while insulation tests are in progress in order to protect the circuit against potential damage on the one hand and to prevent detection of insulation faults due to the power pack on the other. This is done simply by withdrawing (15 to 17 mm) the circuit breaker which is anchored in the enclosure.

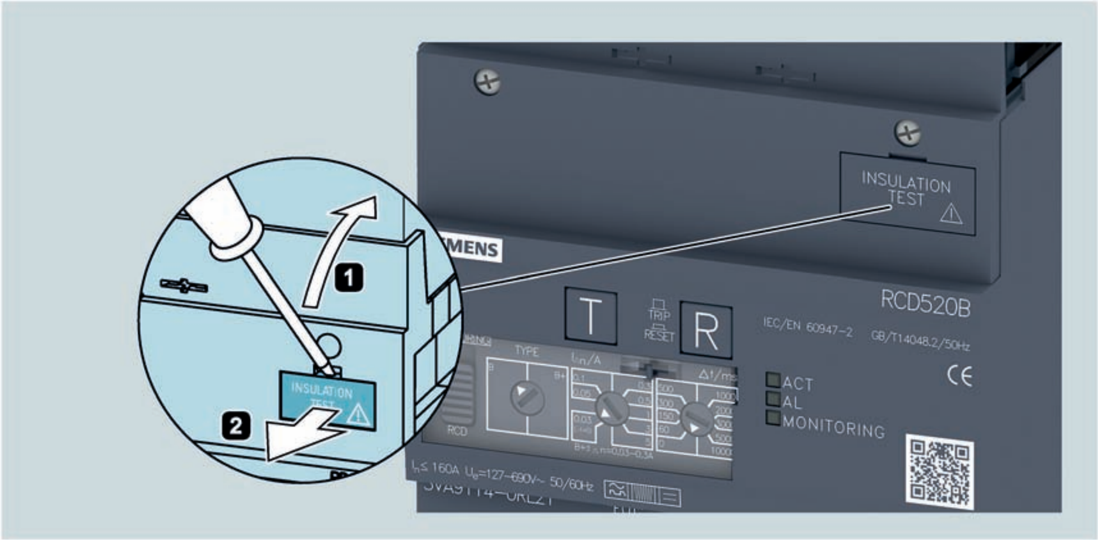

Disconnection of the main conductor connections is thus unnecessary. On completion of the tests, the circuit breaker must be pushed back into position before the residual current device is commissioned.

Testing and resetting the residual current device

Testing

Depending on operating conditions, the test button on the front panel of the residual current device should be pressed in order to function-test the device. The test button is labeled with the letter "T". If the test button is pressed, the device is tested immediately irrespective of the current delay time setting.

If the test button is pressed, a residual current is simulated on a test winding attached to the summation current transformer. If the residual current device is functioning properly, it must trip the molded case circuit breaker (in "RCD" mode).

The test button must be held down for at least two seconds. The design of the test button prevents unintentional actuation.

When the residual current device is in "MONITORING" mode, it behaves in the same way as in RCD mode (e.g. when the tripped auxiliary switch operates), the only difference being that the molded case circuit breaker is not tripped and the <RESET> button is not released.

Note

The residual current device can be successfully tested only if it is connected to a voltage equal to at least 85% of the minimum rated operational voltage.

Resetting

If the residual current device trips the molded case circuit breaker due to a high residual current or actuation of the test button, the <RESET> button on the RCD is released ("RCD" mode must be selected). At the same time, the trip alarm switch which is mechanically coupled with the <RESET> button also signals that a trip has occurred.

The <RESET> button is labeled with the letter "R".

The following actions must be taken in order to reset the residual current device and reclose the main contacts of the molded case circuit breaker:

1. Press the <RESET> button on the residual current device.
   The "tripped" signal at the signaling contacts is canceled, the residual current device is now reset.
2. Reset and switch on the molded case circuit breaker.

Note

The molded case circuit breaker cannot be switched on before the <RESET> button on the residual current device has been actuated and a residual current is no longer present ($I_{\Delta n} > I_{\Delta}$).

Parameterization of the residual current device

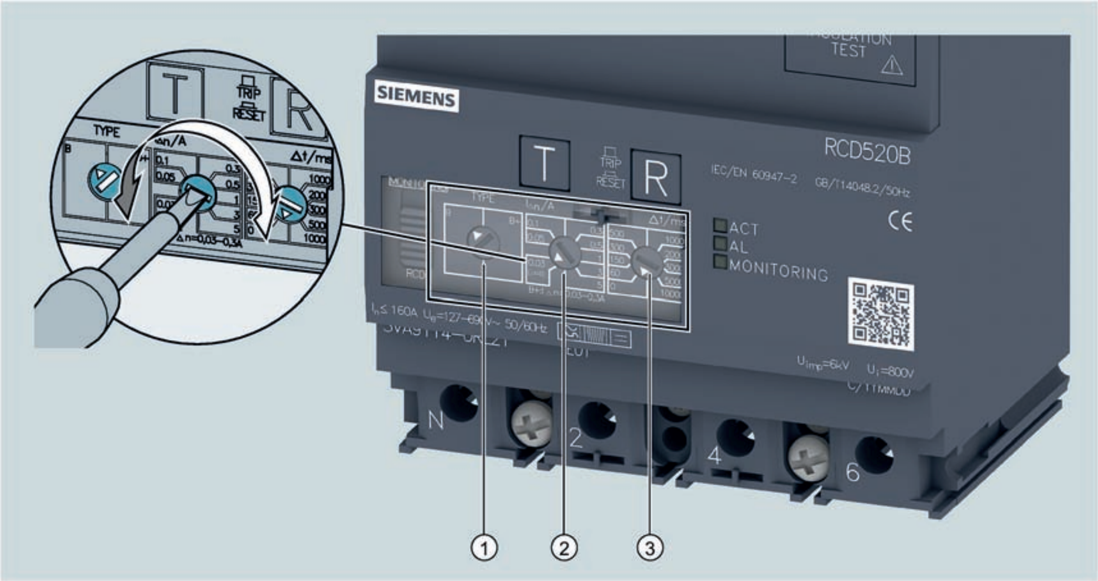

① Button for setting tripping characteristic type B / type B+

② Setting button for response current $I_{\Delta n}$

③ Setting button for delay time Δt

Button for setting the tripping characteristic

This rotary switch can be used to change the tripping characteristic of the RCD520B between type B (according to IEC 62423 and IEC 60947-2) and type B+ (according to DIN VDE 0664-400 for $I_{\Delta n}$ = 30 to 300 mA and for frequencies over 1 kHz).

The same conditions apply for type B+ as for type B, i.e. the tripping characteristics of type B and type B+ are identical up to 1 kHz. With device type B+ however, the frequency range for the detection of residual currents extends up to 20 kHz. Tripping takes place below 420 mA within this frequency range to provide increased fire protection. With type B, the tripping threshold increases above 1 kHz to prevent spurious tripping due to discharge currents, particularly in conjunction with frequency converters.

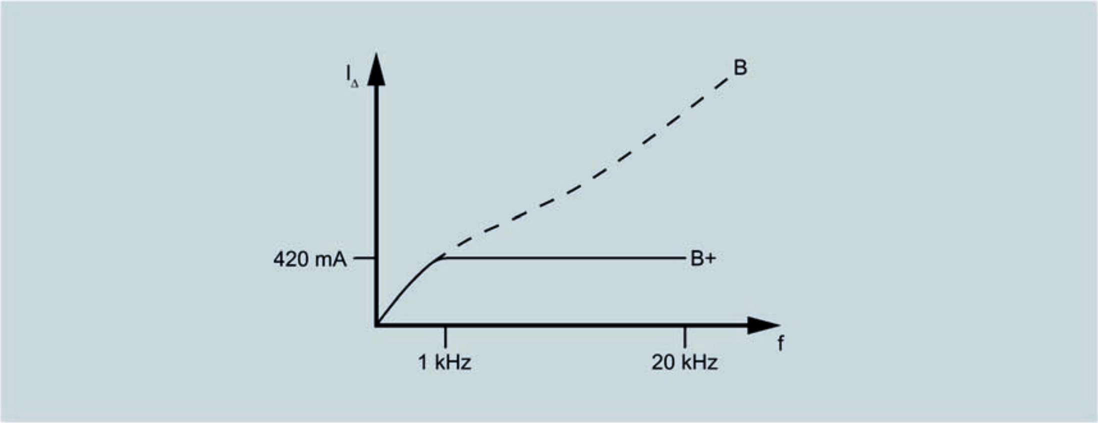

Button for setting the response current $I_{\Delta n}$

The response current can be set in 8 steps, ranging from 0.03 A to 0.3 A for type B+ and 0.03 A to maximum 5 A for type B (for detailed information, see "Overview of selection settings in conjunction with $I_{\Delta n}$"). Each response current has a dedicated setting range. The corresponding response current is set as soon as the button is latched in the setting range.

If the white setting arrow is resting between two setting ranges, the residual current device is automatically set to 0.03 A for safety reasons.

If the response current is set to 0.03 A, the delay time setting is deactivated and the breaker is tripped instantaneously. in order to afford personal protection in the case of direct contact.

Note

In order to protect personnel, it is necessary to seal the transparent protective cover so that the 30 mA setting range cannot be changed.

The factory setting for the response current is 0.03 A.

Button for setting the delay time Δt

The delay time on the RCD520B residual current device can be set in 10 steps, ranging from 0 (instantaneous) to a maximum value of 10000 ms.

Each delay time has a dedicated setting range. The corresponding delay time is set as soon as the button is latched in the setting range.

If the white setting arrow is resting between two setting ranges, the residual current device trips instantaneously in response to residual currents.

The factory setting for the delay time is 0 ms.

Possible procedure for setting the response current and the delay time

1. Switch off the molded case circuit breaker.
2. Open the transparent protective cover over the setting buttons.
3. Adjust the setting values for response current and delay time on the residual current device to the maximum value in each case.
4. Switch on the molded case circuit breaker.
   The LED labeled "ACT" now lights up (RCD mode) on the residual current device or the "ACT" LED flashes and the "MONITORING" LED lights up (monitoring mode); the residual current device is ready.
5. Reduce the setting for the response current until the LED labeled "AL" lights up.
   The residual current is now 30% higher than the response current setting.
6. By turning the setting button clockwise, set the next higher response current.
   The LED "AL" goes out, the correct response current is now set.
7. Set the required delay time.
8. Close the transparent protective cover over the setting buttons.
   The device is now fully parameterized.

Selecting the operating mode

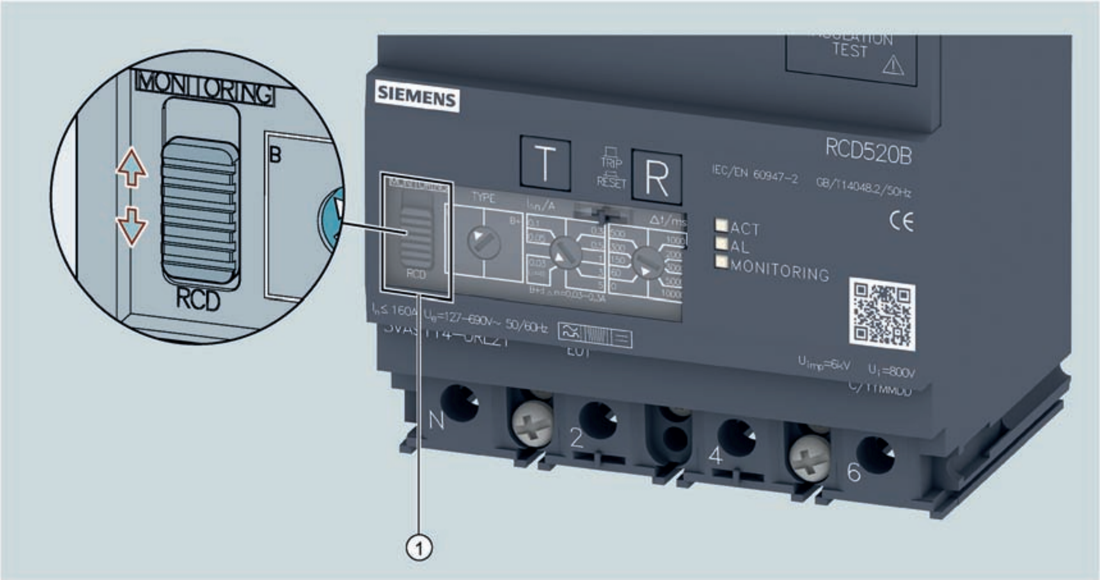

① Selection switch for RCD / MONITORING mode

Two different operating modes can be selected using the selection switch on the RCD520B:

- RCD mode

  

  The device functions as a residual current device in RCD mode. When $I_{\Delta} > I_{\Delta n}$, the residual current device trips the molded case circuit breaker by means of a plunger.

Die <RESET> button on the residual current device releases, thus signaling that the residual current device has tripped. At the same time, the trip alarm switch (TRIP-IND) operates so that the tripped status can be transmitted to an indicator light in the panel door, for example (see also Table "Scenario A" in chapter "Connecting terminals", section "Status indicators").

The molded case circuit cannot be switched back on until the fault has been rectified and the <RESET> button has been pressed.

The residual current device is set to RCD mode as supplied.

- MONITORING mode

In MONITORING mode, the device functions purely as a display unit. In this mode, the "ACT" LED flashes and the "MONITORING" LED is lit.

If the residual current exceeds the response current set on the RCD520B, this does **not** result in tripping of the molded case circuit breaker. The <RESET> button also remains in the depressed position and is **not** released. The trip alarm switch (TRIP-IND) operates however. As soon as the residual current falls below the threshold again, the trip alarm switch resets immediately (see also table "Scenario C" in chapter "Connecting terminals", section "Status indicators").

It is possible to switch between the two operating modes at all times, irrespective of whether the RCD520B residual current device is operating in a running application. Proper functioning of the selection switch is continuously monitored. In the event of a malfunction, the device automatically switches to RCD mode internally, thereby excluding the possibility of a safety-related risk.

Overview of selection settings in conjunction with $I_{\Delta n}$:

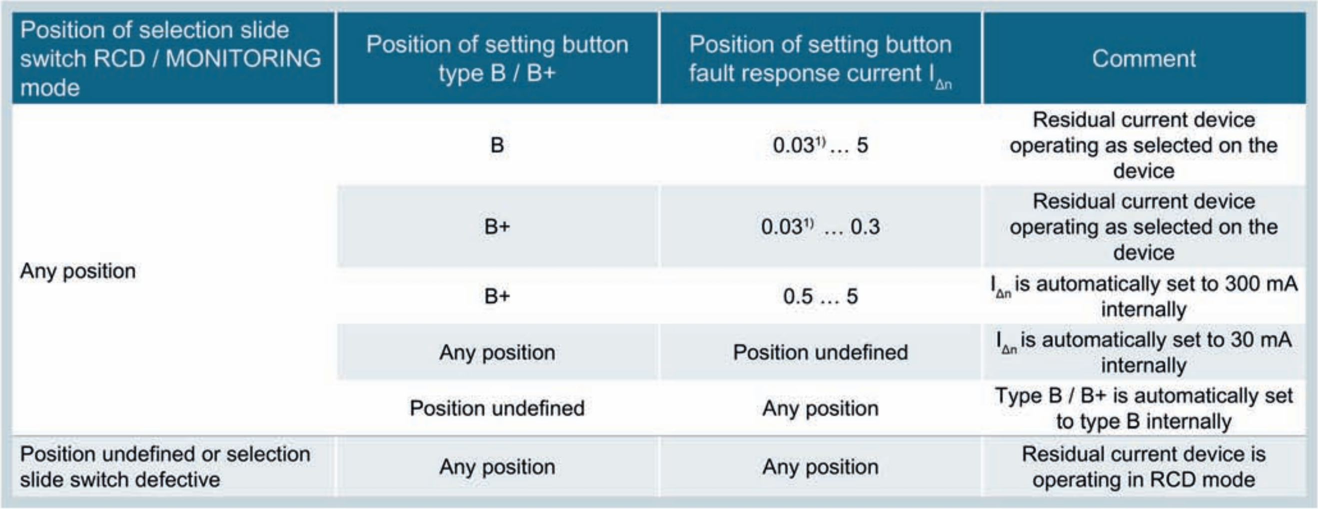

Position of selection slide switch RCD / MONITORING mode	Position of setting button type B / B+	Position of setting button fault response current $I_{\Delta n}$	Comment
Any position	B	0.03 1) … 5	Residual current device operating as selected on the device
	B+	0.03 1) … 0.3	Residual current device operating as selected on the device
	B+	0.5 … 5	$I_{\Delta n}$ is automatically set to 300 mA internally
	Any position	Position undefined	$I_{\Delta n}$ is automatically set to 30 mA internally
	Position undefined	Any position	Type B / B+ is automatically set to type B internally
Position undefined or selection slide switch defective	Any position	Any position	Residual current device is operating in RCD mode

1) Note: If $I_{\Delta n}$ = 0.03 A, the circuit breaker trips instantaneously irrespective of the setting of Δt.

Note

Observe the operating instructions.

Functional testing must be performed before the residual current device is put into operation.

Sealable protective covers of the residual current device

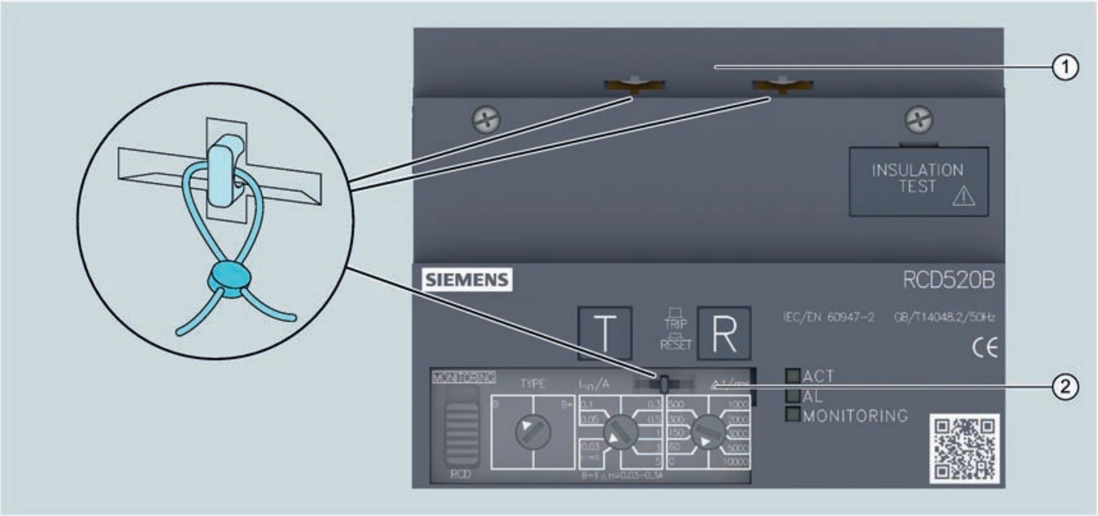

① Contact hazard protective cover over main current paths and auxiliary contacts

② Transparent protective cover over setting buttons

Transparent protective cover over setting buttons

In order to prevent unauthorized access to the settings for $I_{\Delta n}$, Δt, type B/B+ and RCD/MONITORING mode, the transparent cover over the settings buttons can be optionally sealed.

Note

In order to protect personnel, it is necessary to seal the transparent protective cover so that the 30 mA setting range cannot be changed.

Contact hazard protective cover over main current paths and auxiliary contacts including sealing option

After the residual current device RCD520B has been mounted on the 3VA11 molded case circuit breaker, a contact hazard protective cover is installed over the main current paths to protect against direct contact. This cover can be sealed optionally in order to block any attempt to dismantle the residual current device from the molded case circuit breaker.

Terminals

A number of auxiliary contacts which perform different functions are located underneath the contact hazard protective cover:

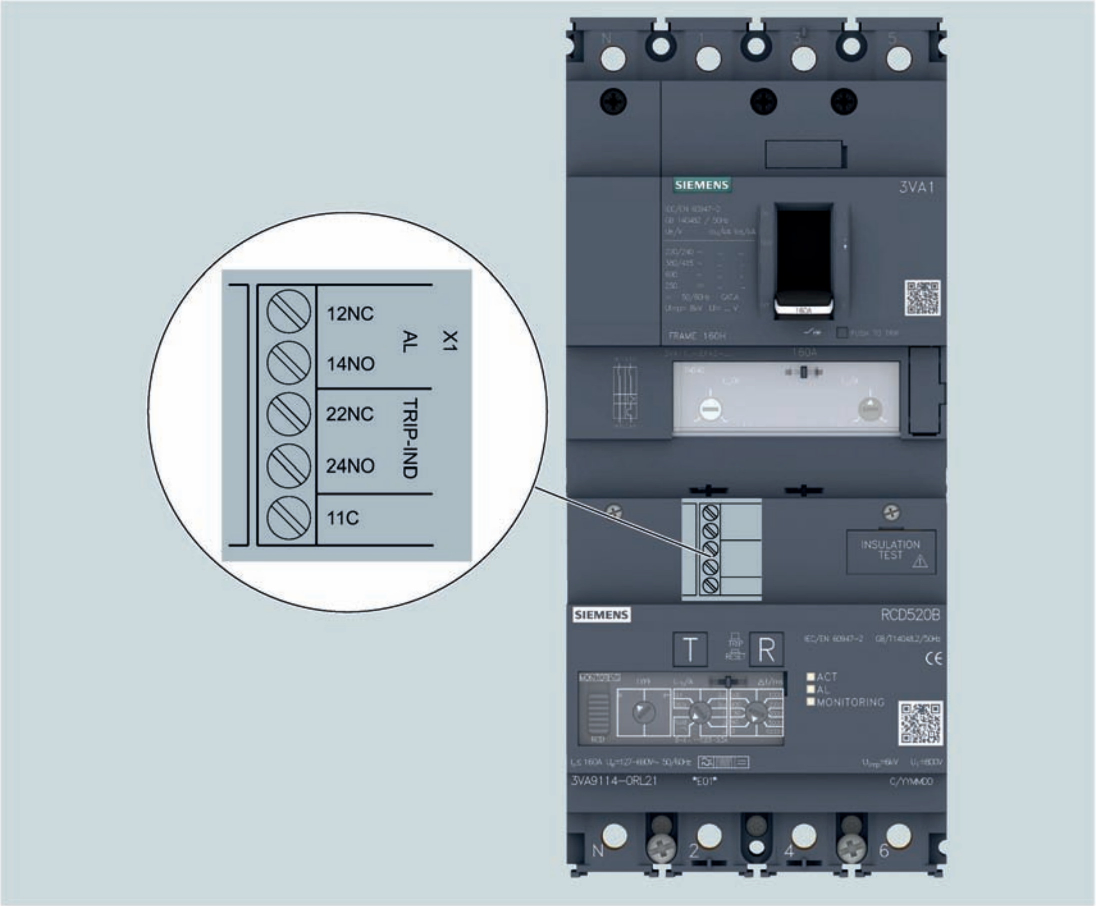

Alarm switch

Floating auxiliary contacts for 2 different alarms are provided:

- TRIP-IND (TRIP INDICATOR)

  A tripped signal can be output via this auxiliary switch, e.g. for connection to a warning lamp. This trip alarm switch operates as soon as the residual current exceeds the set response current, irrespective of whether the residual current device is in RCD or MONITORING mode.

  Since the relay for the tripped signal (TRIP-IND) is a bistable relay, the relay contact states remain "stored" even in the event of a power outage. When the power supply recovers, the indicated relay contact states are those which existed before the power outage.

- AL

  Signaling switch for pre-alarm. This auxiliary switch operates as soon as the residual current exceeds 30% of the operating current setting value. The relay for the pre-alarm signal (AL) drops out again as soon as the residual current reaches or falls below the pre-alarm threshold of 30%.

  Since the relay for the pre-alarm signal (AL) is a monostable relay, the relay switches back to the original state in the event of a power outage.

The standard auxiliary switches for pre-alarms and tripped signals have changeover contacts and screw-type connections.

The terminal designations of the relevant contact, the maximum rated voltage and the current carrying capacity are shown in the diagram below.

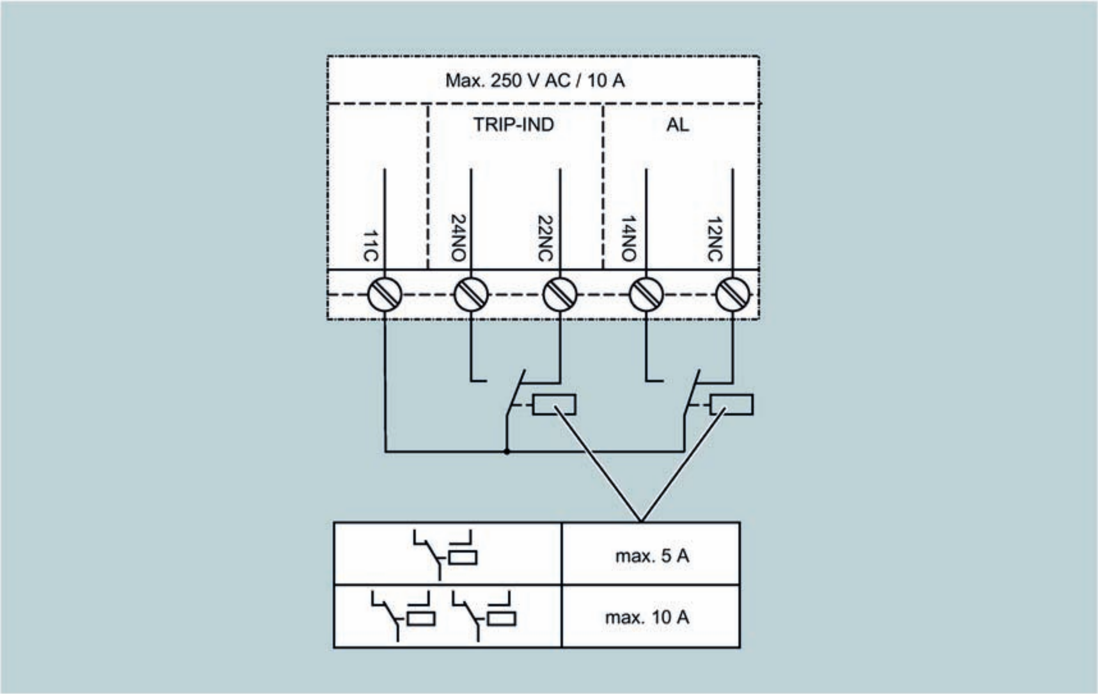

Each relay contact has a maximum rated operational current of 5 A at 250 V AC (AC-13). The common terminal (11C = Common) is designed such that the maximum permissible current of 5 A can be applied to both relay contacts (TRIP-IND and AL) simultaneously.

Note

Cables for the following terminals must be routed separately from the main circuits. Their maximum cable length is 300 m.

Use of signaling switches in SELV and PELV circuits:

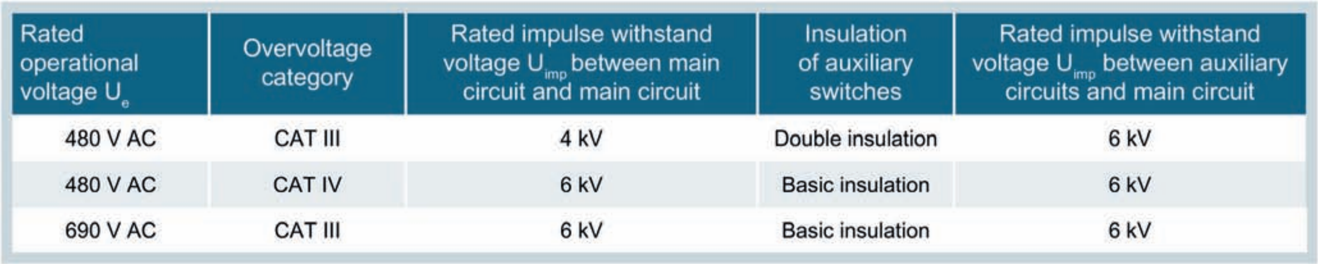

Rated operational voltage U_e	Overvoltage category	Rated impulse withstand voltage U_{imp} between main circuit and main circuit	Insulation of auxiliary switches	Rated impulse withstand voltage U_{imp} between auxiliary circuits and main circuit
480 V AC	CAT III	4 kV	Double insulation	6 kV
480 V AC	CAT IV	6 kV	Basic insulation	6 kV
690 V AC	CAT III	6 kV	Basic insulation	6 kV

The signaling switches TRIP-IND and AL meet the requirements for safety isolation (including double insulation between the auxiliary current paths and the main circuit).

Requirement:

1. Molded case circuit breakers equipped with a residual current device are operated with a rated operational voltage of 480 V AC.
2. The combination is installed at the distribution system level (overvoltage category III according to DIN EN-60947-1 Annex H).

If these two requirements are met, the signaling switches are suitable for SELV and PELV circuits.

Status indicators

The table below illustrates the behavior of pre-alarm and tripped signals on RCD520B devices in response to various user actions and residual currents.

Scenario A: Residual current device is in RCD mode, infeed at the top

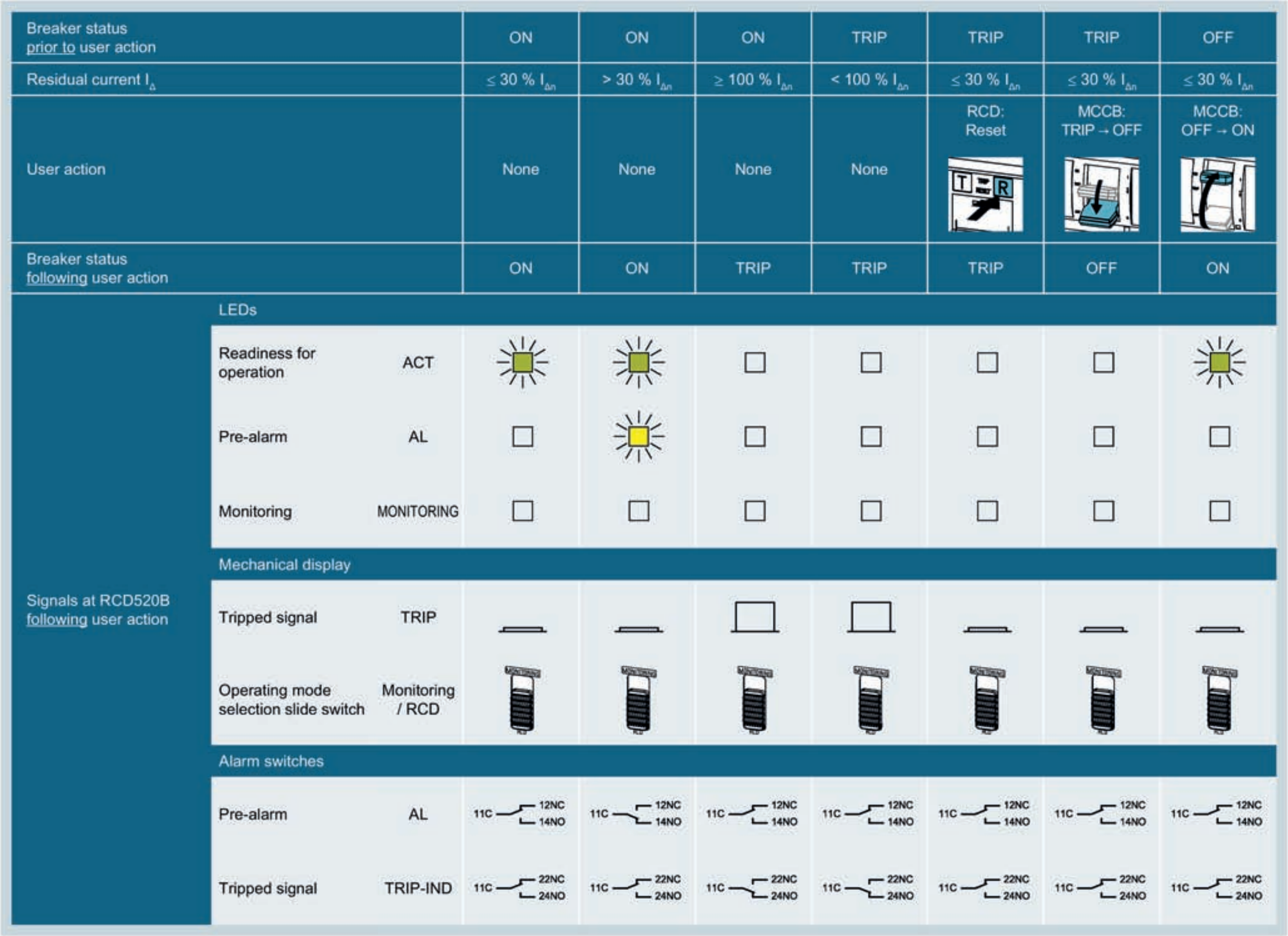

Breaker status prior to user action			ON	ON	ON	TRIP	TRIP	TRIP	OFF
Residual current I_{Δ}			≤ 30 % $I_{\Delta n}$	> 30 % $I_{\Delta n}$	≥ 100 % $I_{\Delta n}$	< 100 % $I_{\Delta n}$	≤ 30 % $I_{\Delta n}$	≤ 30 % $I_{\Delta n}$	≤ 30 % $I_{\Delta n}$
User action			None	None	None	None	RCD: Reset	MCCB: TRIP → OFF	MCCB: OFF → ON
Breaker status following user action			ON	ON	TRIP	TRIP	TRIP	OFF	ON
Signals at RCD520B following user action	LEDs								
	Readiness for operation	ACT	☀	☀	☐	☐	☐	☐	☀
	Pre-alarm	AL	☐	☀	☐	☐	☐	☐	☐
	Monitoring	MONITORING	☐	☐	☐	☐	☐	☐	☐
	Mechanical display								
	Tripped signal	TRIP	—	—	☐	☐	—	—	—
	Operating mode selection slide switch	Monitoring / RCD							
	Alarm switches								
	Pre-alarm	AL	11C 12NC 14NO	11C 12NC 14NO	11C 12NC 14NO	11C 12NC 14NO	11C 12NC 14NO	11C 12NC 14NO	11C 12NC 14NO
	Tripped signal	TRIP-IND	11C 22NC 24NO	11C 22NC 24NO	11C 22NC 24NO	11C 22NC 24NO	11C 22NC 24NO	11C 22NC 24NO	11C 22NC 24NO

Scenario B: Residual current device is in RCD mode, infeed at the bottom

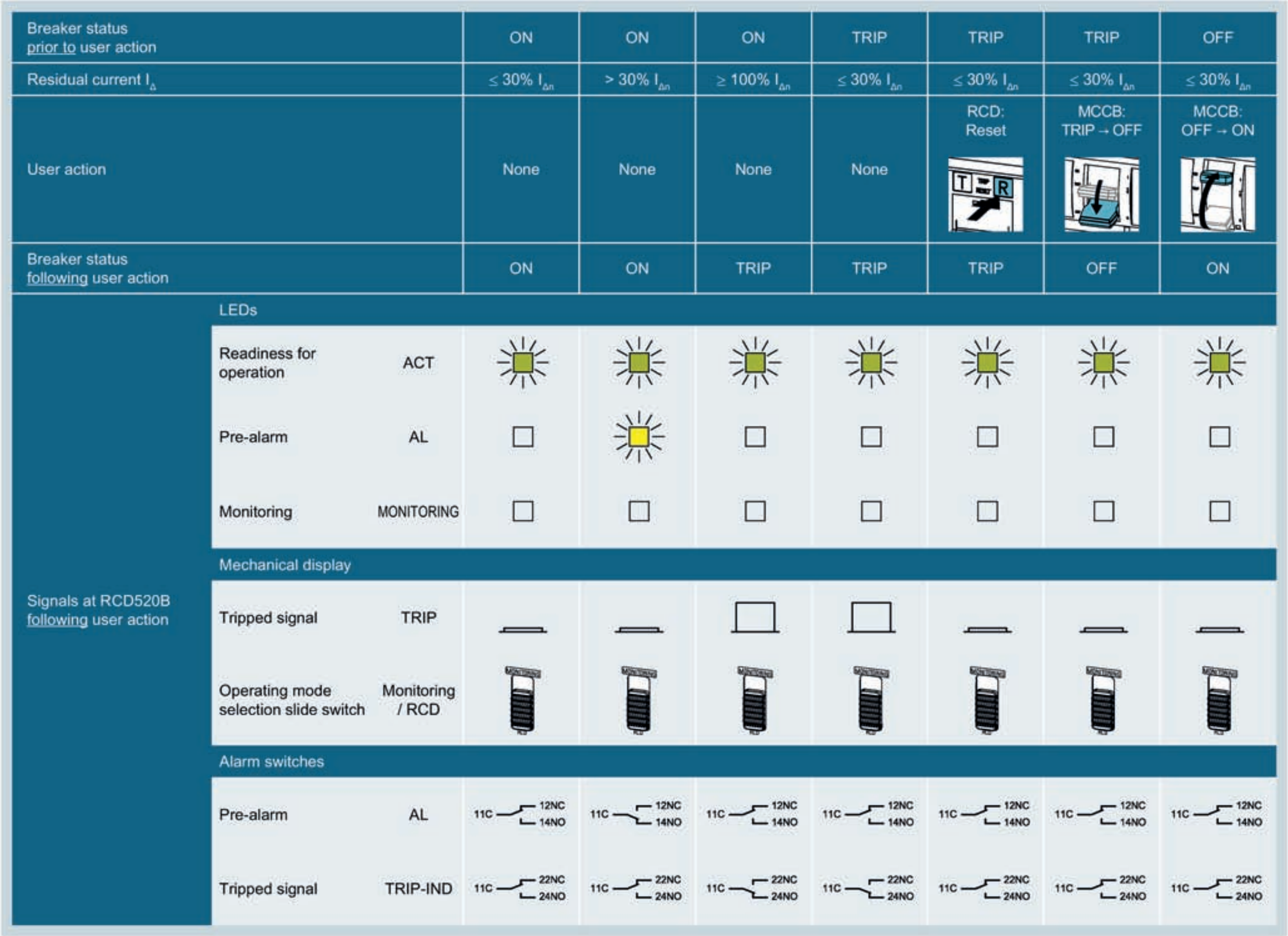

Breaker status prior to user action			ON	ON	ON	TRIP	TRIP	TRIP	OFF
Residual current I_Δ			≤ 30% $I_{\Delta n}$	> 30% $I_{\Delta n}$	≥ 100% $I_{\Delta n}$	≤ 30% $I_{\Delta n}$	≤ 30% $I_{\Delta n}$	≤ 30% $I_{\Delta n}$	≤ 30% $I_{\Delta n}$
User action			None	None	None	None	RCD: Reset	MCCB: TRIP → OFF	MCCB: OFF → ON
Breaker status following user action			ON	ON	TRIP	TRIP	TRIP	OFF	ON
Signals at RCD520B following user action	LEDs								
	Readiness for operation	ACT	🟩	🟩	🟩	🟩	🟩	🟩	🟩
	Pre-alarm	AL	☐	🟨	☐	☐	☐	☐	☐
	Monitoring	MONITORING	☐	☐	☐	☐	☐	☐	☐
	Mechanical display								
	Tripped signal	TRIP	▁	▁	☐	☐	▁	▁	▁
	Operating mode selection slide switch	Monitoring / RCD							
	Alarm switches								
	Pre-alarm	AL	11C 12NC 14NO	11C 12NC 14NO	11C 12NC 14NO	11C 12NC 14NO	11C 12NC 14NO	11C 12NC 14NO	11C 12NC 14NO
	Tripped signal	TRIP-IND	11C 22NC 24NO	11C 22NC 24NO	11C 22NC 24NO	11C 22NC 24NO	11C 22NC 24NO	11C 22NC 24NO	11C 22NC 24NO

Scenario C: Residual current device is in MONITORING mode, infeed at the top

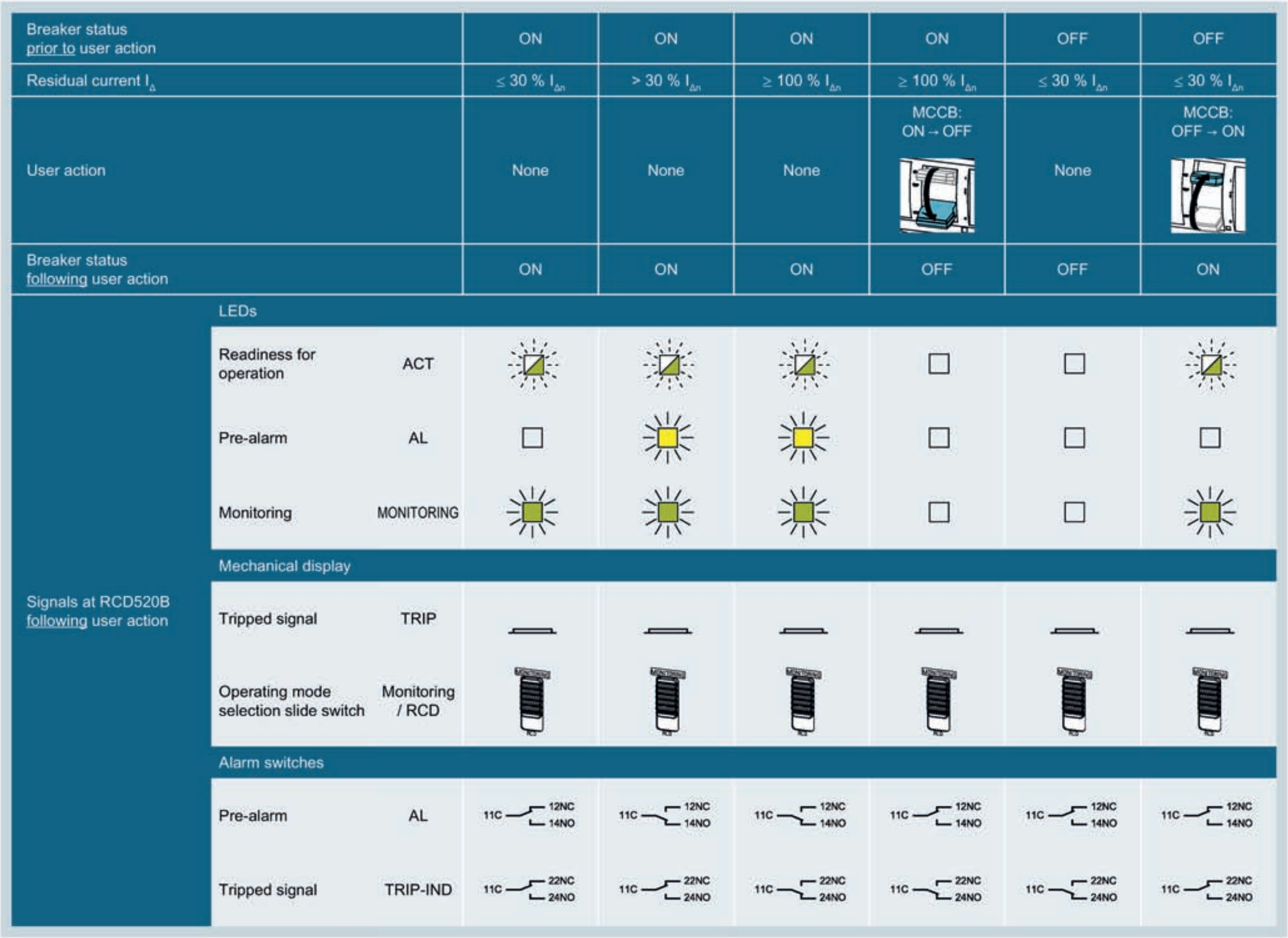

Breaker status prior to user action			ON	ON	ON	ON	OFF	OFF
Residual current I_{Δ}			$\leq 30\ \%\ I_{\Delta n}$	$> 30\ \%\ I_{\Delta n}$	$\geq 100\ \%\ I_{\Delta n}$	$\geq 100\ \%\ I_{\Delta n}$	$\leq 30\ \%\ I_{\Delta n}$	$\leq 30\ \%\ I_{\Delta n}$
User action			None	None	None	MCCB: ON → OFF	None	MCCB: OFF → ON
Breaker status following user action			ON	ON	ON	OFF	OFF	ON
Signals at RCD520B following user action	LEDs							
	Readiness for operation	ACT	◩	◩	◩	☐	☐	◩
	Pre-alarm	AL	☐	🟨	🟨	☐	☐	☐
	Monitoring	MONITORING	🟩	🟩	🟩	☐	☐	🟩
	Mechanical display							
	Tripped signal	TRIP	▭	▭	▭	▭	▭	▭
	Operating mode selection slide switch	Monitoring / RCD						
	Alarm switches							
	Pre-alarm	AL	11C 12NC 14NO	11C 12NC 14NO	11C 12NC 14NO	11C 12NC 14NO	11C 12NC 14NO	11C 12NC 14NO
	Tripped signal	TRIP-IND	11C 22NC 24NO	11C 22NC 24NO	11C 22NC 24NO	11C 22NC 24NO	11C 22NC 24NO	11C 22NC 24NO

Scenario D: Residual current device is in MONITORING mode, infeed at the bottom

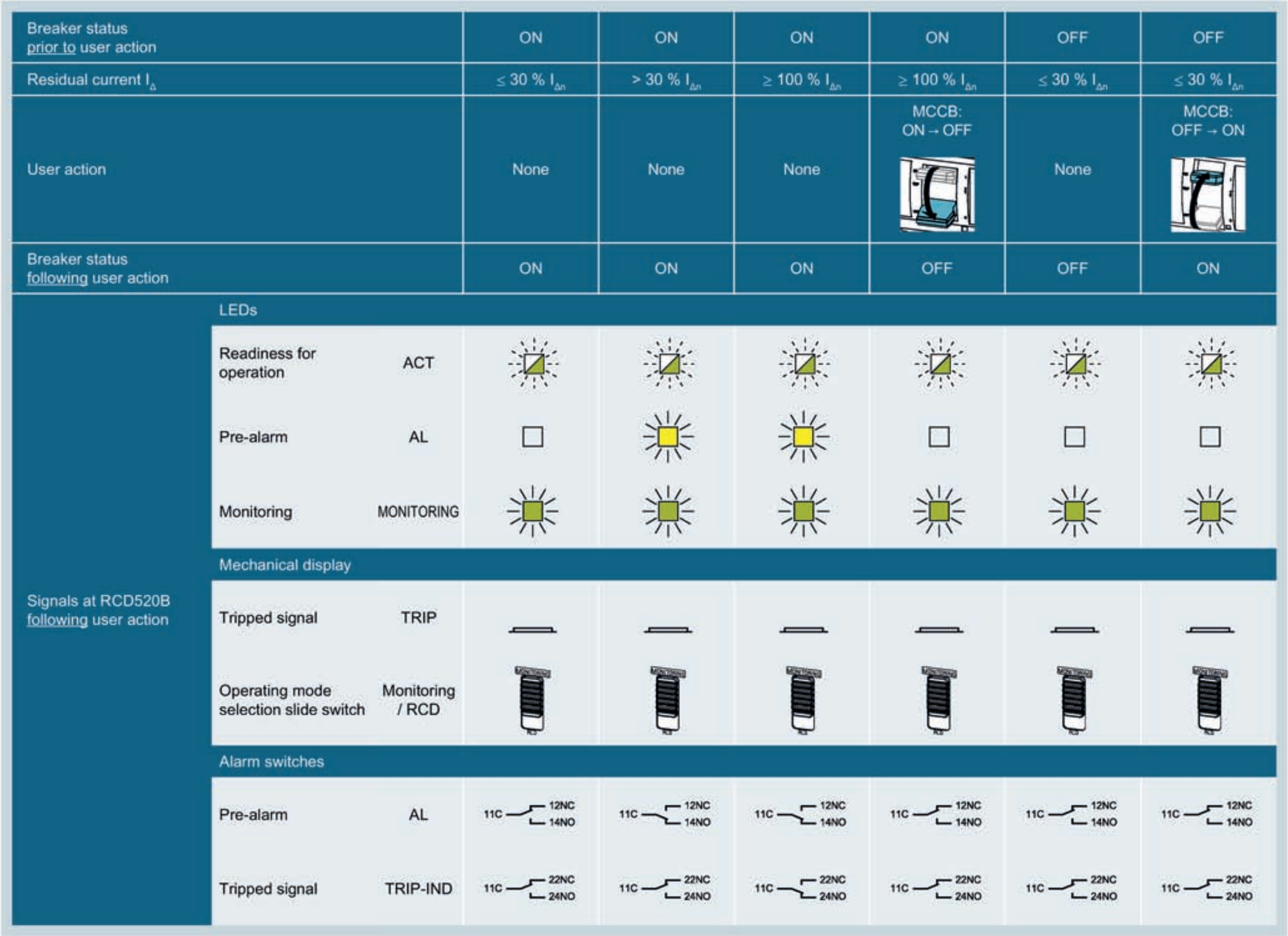

Breaker status prior to user action			ON	ON	ON	ON	OFF	OFF
Residual current I_Δ			≤ 30 % $I_{\Delta n}$	> 30 % $I_{\Delta n}$	≥ 100 % $I_{\Delta n}$	≥ 100 % $I_{\Delta n}$	≤ 30 % $I_{\Delta n}$	≤ 30 % $I_{\Delta n}$
User action			None	None	None	MCCB: ON → OFF	None	MCCB: OFF → ON
Breaker status following user action			ON	ON	ON	OFF	OFF	ON
Signals at RCD520B following user action	LEDs							
	Readiness for operation	ACT	◩	◩	◩	◩	◩	◩
	Pre-alarm	AL	☐	🟨	🟨	☐	☐	☐
	Monitoring	MONITORING	🟩	🟩	🟩	🟩	🟩	🟩
	Mechanical display							
	Tripped signal	TRIP	▭	▭	▭	▭	▭	▭
	Operating mode selection slide switch	Monitoring / RCD						
	Alarm switches							
	Pre-alarm	AL	11C 12NC 14NO	11C 12NC 14NO	11C 12NC 14NO	11C 12NC 14NO	11C 12NC 14NO	11C 12NC 14NO
	Tripped signal	TRIP-IND	11C 22NC 24NO	11C 22NC 24NO	11C 22NC 24NO	11C 22NC 24NO	11C 22NC 24NO	11C 22NC 24NO

Cable installation

Cable ducts for bringing out cables are provided to the left and right on the residual current device.

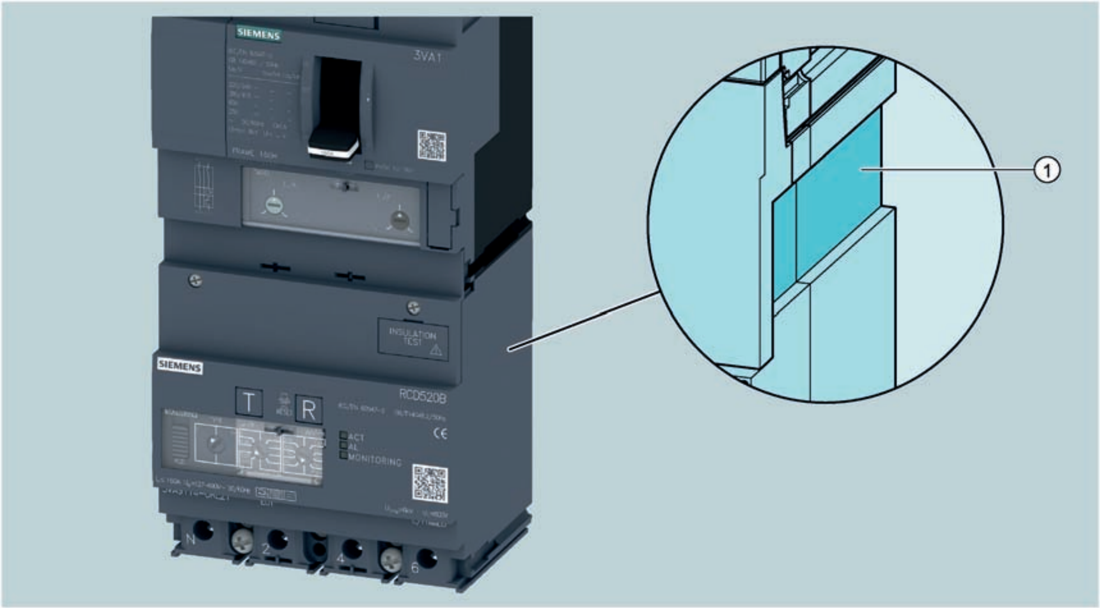

① Cable duct

Other labels on front panel

Approvals

The residual current device bears the CE mark. For an overview of all approvals, please refer to Appendix.

For all queries relating to approvals, please contact Technical Support (Page 10).

Technical specifications

In ≤ …A:	Specifies the highest permissible rated operational current of the molded case circuit breaker with which the residual current device may be combined.
Ue ~ …V:	Specifies the operating voltage range of the residual current device.
…Hz:	Specifies the operating frequency range of the residual current device.
	Denotes the response behavior to residual currents.

Installation

Installation

Regardless of the type of connection technology installed on the 3VA1 molded case circuit breaker, the RCD520B residual current device is mounted on the load side (i.e. beneath the thermal-magnetic trip unit) of the breaker:

1. Dismantle the loadside connection components of the molded case circuit breaker and install the supplied connection components for the residual current device.
2. Insert the residual current device into the T slots of the molded case circuit breaker.

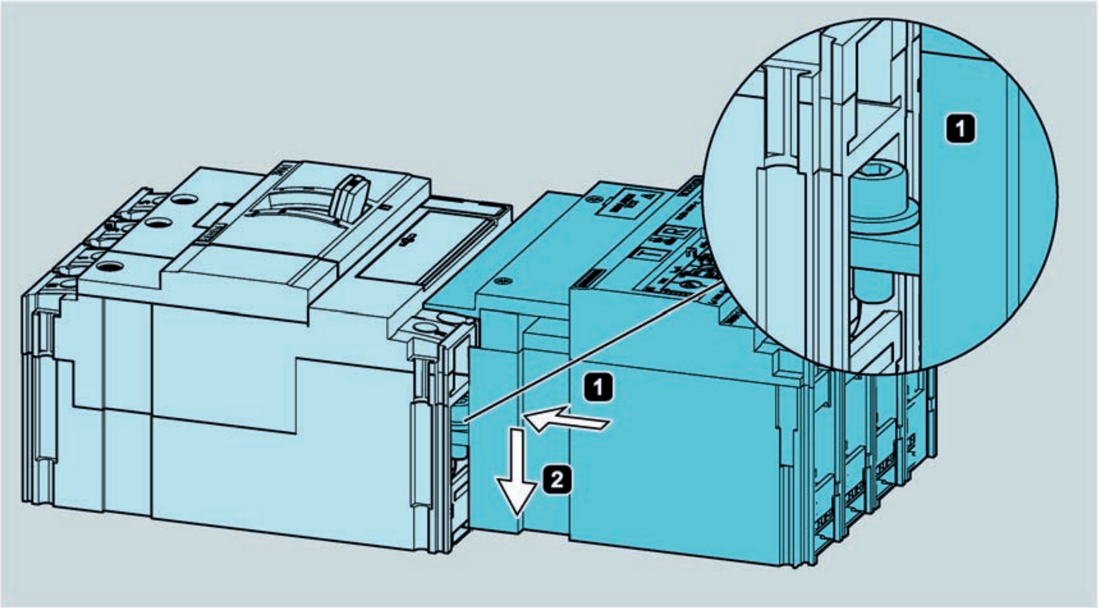

3. Push the residual current device backwards until its rear panel is flush with the rear panel of the molded case circuit breaker.
4. Screw the molded case circuit breaker to the residual current device. Special connecting screws are provided on the line side of the residual current device for this purpose.
5. Place a contact hazard protective cover over the circuit breaker/RCD assembly.
6. Reinstall the loadside connection components of the molded case circuit breaker at the outgoing feeder end of the residual current device.
7. Attach the assembly to a mounting plate using the mounting screws.

Note

Since the outgoing feeder end of the residual current device has exactly the same connection contours as the 3VA11 molded case circuit breaker, all connection accessories, e.g. phase barrier, terminal cover, can also be mounted on the residual current device.

Tripping

The molded case circuit breaker is tripped by means of a direct-acting tappet which engages in the breaker mechanism from the residual current device.

Periodic self-test

In addition to manually checking the proper functioning of the residual current device by pressing the test button, cyclic self-tests are performed inside the residual current device.

Checks are performed periodically, for example, to ensure that:

- the microcontroller is functioning properly
- the physical connection between the printed-circuit board and the maglatch is interrupted
- the current transformers and the detection electronics are functioning properly

Function overview

The table below provides an overview of all the functions and data which are available in the residual current device environment:

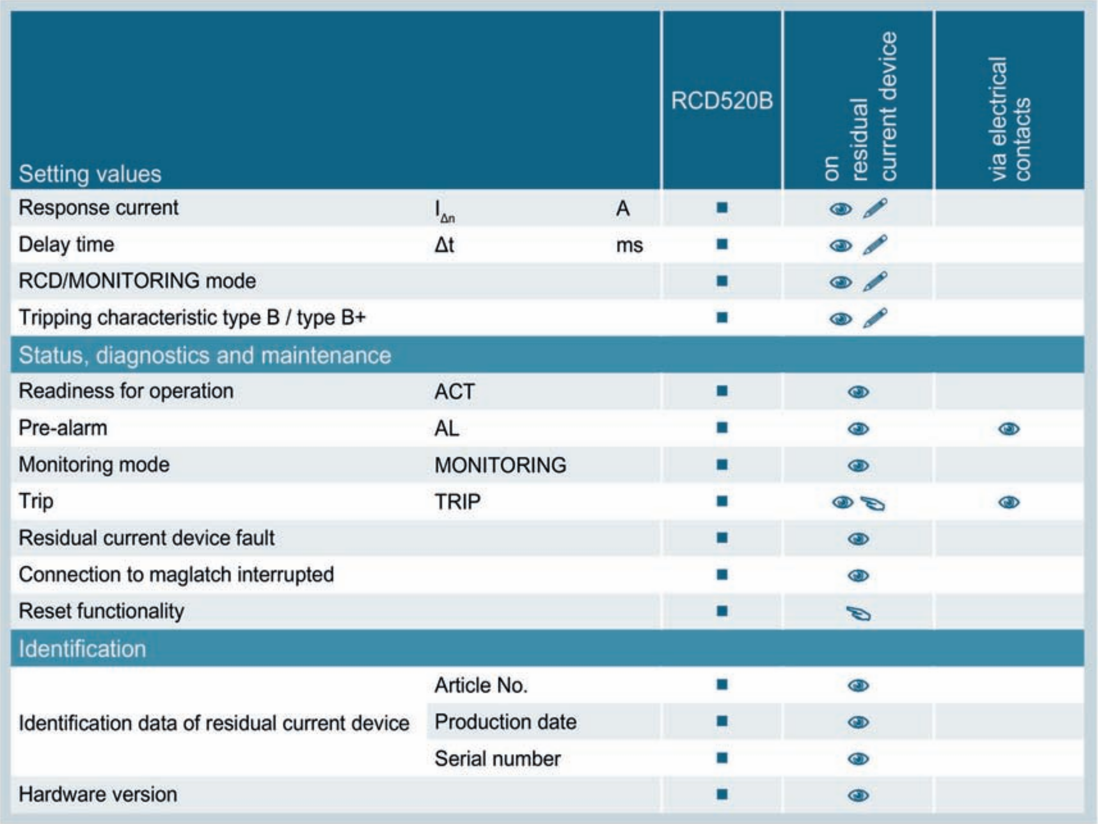

Setting values			RCD520B	on residual current device	via electrical contacts
Response current	$I_{\Delta n}$	A	■	👁 ✎	
Delay time	Δt	ms	■	👁 ✎	
RCD/MONITORING mode			■	👁 ✎	
Tripping characteristic type B / type B+			■	👁 ✎	
Status, diagnostics and maintenance					
Readiness for operation	ACT		■	👁	
Pre-alarm	AL		■	👁	👁
Monitoring mode	MONITORING		■	👁	
Trip	TRIP		■	👁 ☞	👁
Residual current device fault			■	👁	
Connection to maglatch interrupted			■	👁	
Reset functionality			■	☞	
Identification					
Identification data of residual current device	Article No.		■	👁	
	Production date		■	👁	
	Serial number		■	👁	
Hardware version			■	👁	

👁	Value can be read
✎	Value can be edited
☞	Commands

4.8.2.4 Loadside residual current device Advanced RCD820

The "Advanced" residual current devices of type RCD820 are available as an accessory for 3VA2 molded case circuit breakers.

Front view of Advanced RCD820

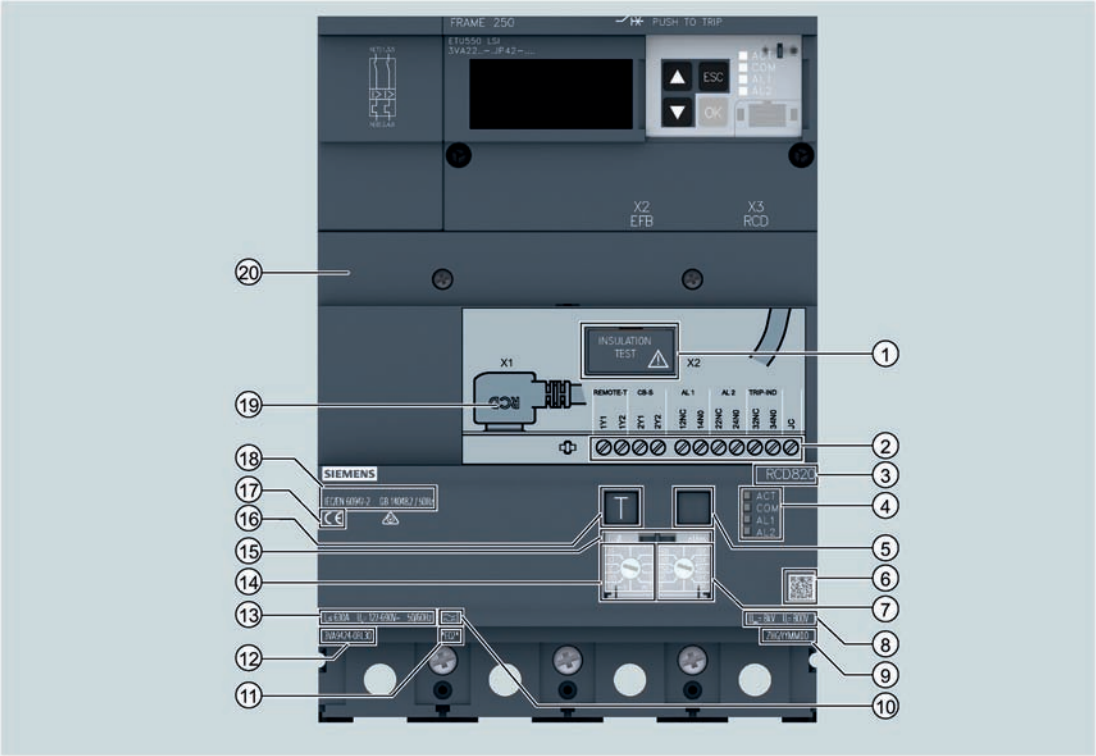

① Circuit breaker
② Auxiliary contacts
③ Type designation
④ LED: ACTIVE, communication, pre-alarm
⑤ Tripped display
⑥ Knowledge Manager
⑦ Setting button for delay time
⑧ Rated insulation voltage and rated impulse strength
⑨ Location and date of manufacture
⑩ Device type
⑪ Product version
⑫ Article number
⑬ Maximum rated operational current, rated operational voltage and frequency
⑭ Setting button for response current
⑮ Transparent protective cover over setting buttons
⑯ Test button (test device)
⑰ Approval
⑱ Standard
⑲ RCD-to-ETU connecting cable
⑳ Contact hazard protective cover over main current paths with sealing option

Description of front panel view

Display elements

"Ready" signals, communication status and alarms

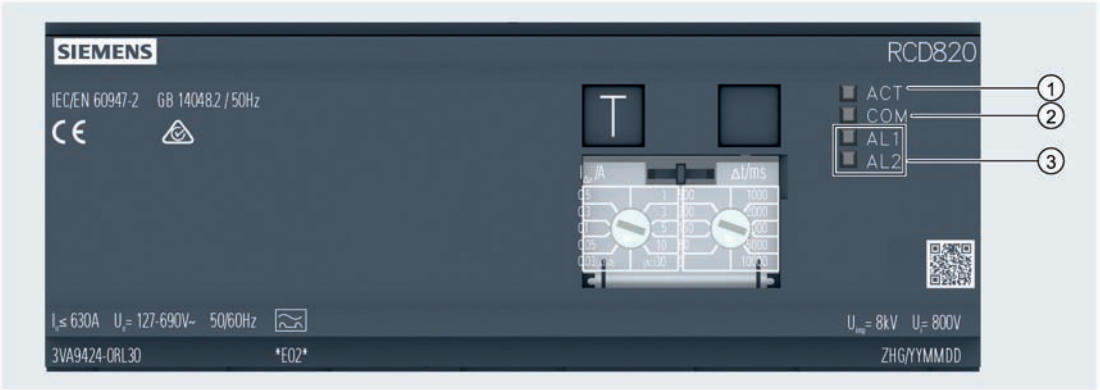

- "Ready" signal of the residual current device:
  The LED labeled "ACT" ① stands for ACTIVE and lights up when the device is ready to operate.
- Communication status:
  The LED labeled "COM" ② stands for COMMUNICATION and indicates the communication status of the residual current device.
- Pre-alarms:
  The Advanced RCD820 has two LEDs labeled "AL1" (ALARM 1) ③ and "AL2" (ALARM 2) ③ which light up successively or simultaneously to promptly indicate potential shutdown of the installation due to residual current.

LED displays

LED	Status	Description
☐ ACT	Off	Residual current device is not in operation
◪ ACT	Flashing	- Residual current device is malfunctioning - Residual current device is not functioning as a trip unit (no cable is connected between the ETU and RCD) - Residual current device is integrated into communication system only Residual current device is not connected to a supply voltage - Break in connecting cable between RCD and ETU
🟩 ACT	On	Residual current device is operating normally.
☐ COM	Off	Communication function of the residual current device is inoperative. This can happen, for example, if - a 3VA2 molded case circuit breaker is equipped with an ETU 5-series or 8-series, but not with a communication module. - a 3VA2 molded case circuit breaker is equipped with an ETU 3-series, but the ETU is not equipped with a communication interface. - Residual current device is not functioning as a trip unit (no cable is connected between the RCD and ETU)
◪ COM	Flashing	Fault in communication system of the residual current device. Possible causes: - Break in connecting cable between RCD and ETU
🟩 COM	On	The communication system of the residual current device is active. Even when the molded case circuit breaker is switched off, communication remains active on condition that - the communication system is working properly, - the ETU is connected to an external power supply through the COM060 communication module.
🟩 ACT 🟨 AL1 ☐ AL2	On On Off	The residual current I_Δ is higher than 30 % of the set response current ($I_{\Delta n}$ value).
🟩 ACT 🟨 AL1 🟧 AL2	On On On	The residual current I_Δ is higher than 60 % of the set response current ($I_{\Delta n}$ value).
◪ ACT ◪ COM ◪ AL1 ◪ AL2	Flashing Flashing Flashing Flashing	Possible causes: - The residual current device is defective. - The white setting arrow of the Δt setting button is resting between two setting ranges.

Tripped display

If the residual current device is tripped by a residual current, a remote trip command or actuation of the test button, the trip is signaled mechanically on the RCD, i.e. by a rotating disk.

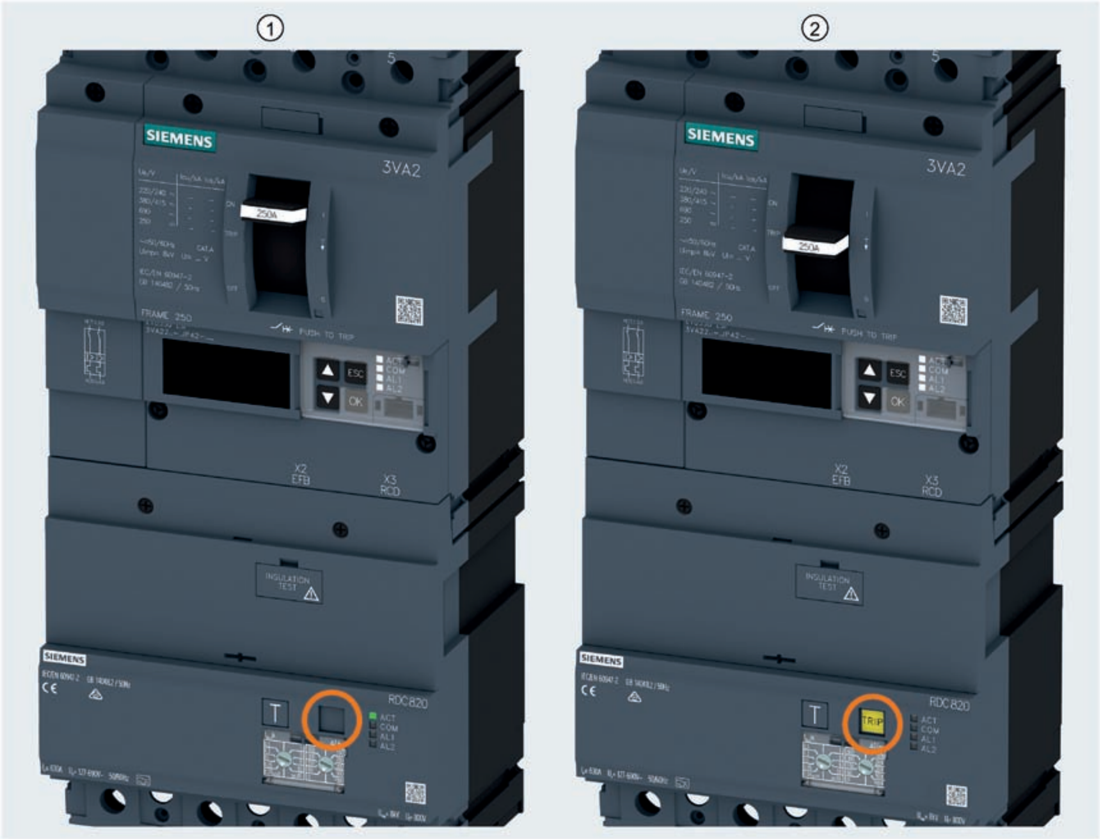

① Residual current device is operating normally and has not tripped

② Residual current device has tripped

Note

In the case of infeed from below, an auxiliary switch must be connected by means of auxiliary contacts CB-S to ensure correct functioning of the tripped display (for description, see auxiliary contacts CB-S).

Operator controls

Insulation tests

It is absolutely essential to isolate the evaluation electronics circuit while insulation tests are in progress in order to protect the circuit against potential damage on the one hand and to prevent detection of insulation faults due to the power pack on the other. This is done simply by withdrawing (15 to 17 mm) the circuit breaker which is anchored in the enclosure.

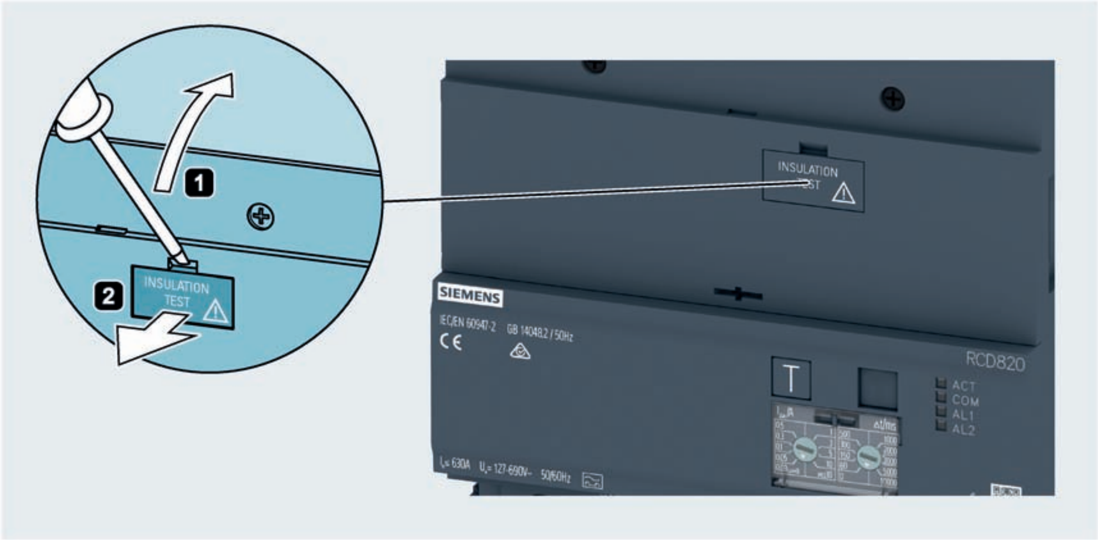

Disconnection of the main conductor connections is thus unnecessary. On completion of the tests, the circuit breaker must be pushed back into position before the residual current device is commissioned.

Testing and resetting the residual current device

Testing

Depending on operating conditions, the test button on the front panel of the residual current device should be pressed in order to function-test the device. The test button is labeled with the letter "T". If the test button is pressed, the device is tested immediately irrespective of the current delay time setting.

If the test button is pressed, a residual current is simulated on a test winding attached to the summation current transformer. If the residual current device is functioning properly, it must trip the molded case circuit breaker.

The test button must be held down for at least 2 seconds. The design of the test button prevents unintentional actuation.

Note

The residual current device can be successfully tested only if it is connected to a voltage equal to at least 85% of the minimum rated operational voltage.

Resetting

The residual current device and the "tripped" display are reset by means of the handle of the molded case circuit breaker, or the handle of the manual operator or by means of the motor operator.

Parameterization of the residual current device

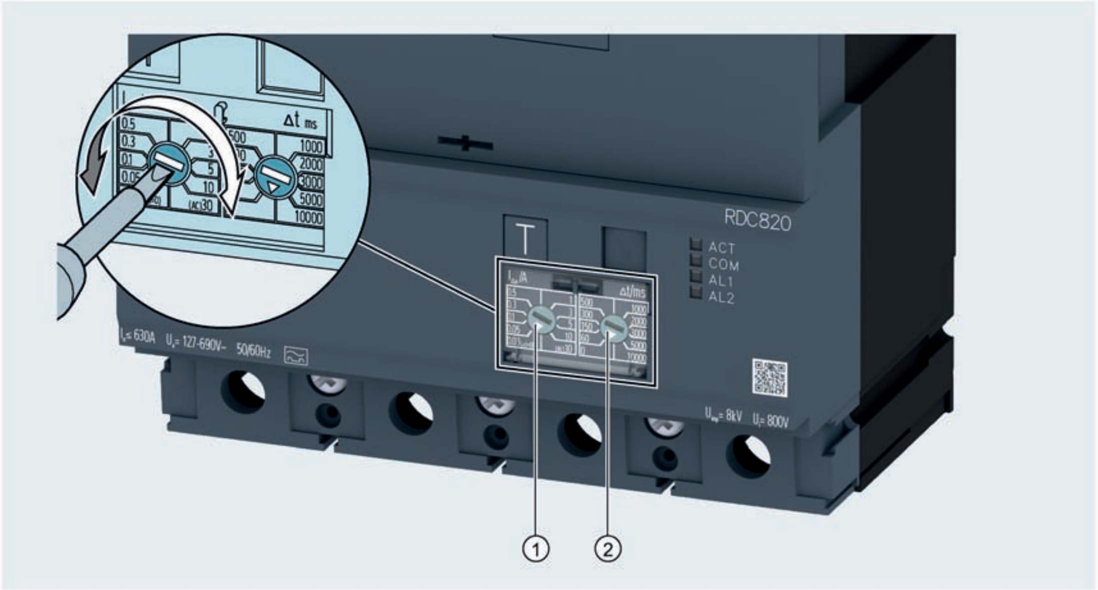

① Setting button for response current $I_{\Delta n}$

② Setting button for delay time Δt

Button for setting the response current $I_{\Delta n}$

The response current can be set in ten steps, ranging from 0.03 A to maximum 30 A. A residual current of type A is detected within the 0.03 A to 10 A range. If the response current is set to 30 A, the device detects only residual currents of type AC (i.e. purely sinusoidal currents).

Each response current has a dedicated setting range. The corresponding response current is set as soon as the button is latched in the setting range.

If the white setting arrow is resting between two setting ranges, the residual current device is automatically set to 0.03 A for safety reasons.

If the response current is set to 0.03 A, the delay time setting is deactivated and the breaker is tripped instantaneously. in order to afford personal protection in the case of direct contact.

Note

In order to protect personnel, it is necessary to seal the transparent protective cover so that the 30 mA setting range cannot be changed.

The factory setting for the response current is 0.03 A.

Button for setting the delay time Δt

The delay time can be set in ten steps, ranging from 0 (instantaneous) to a maximum value of 10000 ms.

Each delay time has a dedicated setting range. The corresponding delay time is set as soon as the button is latched in the setting range.

If the white setting arrow is resting between two setting ranges, the residual current device trips instantaneously in response to residual currents.

The factory setting for the delay time is 0 ms.

Possible procedure for setting the response current and the delay time

1. Switch off the molded case circuit breaker.
2. Open the transparent protective cover over the setting buttons.
3. Adjust the setting values for response current and delay time on the residual current device to the maximum value in each case.
4. Switch on the molded case circuit breaker.
   The LED labeled "ACT" on the residual current device now lights up, the residual current device is ready.
5. Reduce the setting for the response current until the LED labeled "AL1" lights up.
   The residual current is now 30% higher than the response current setting.
6. By turning the setting button clockwise, set the next higher response current.
   The LED "AL1" goes out, the correct response current is now set.
7. Set the required delay time.
8. Close the transparent protective cover over the setting buttons.
   The device is now fully parameterized.

Sealable protective covers of the residual current device

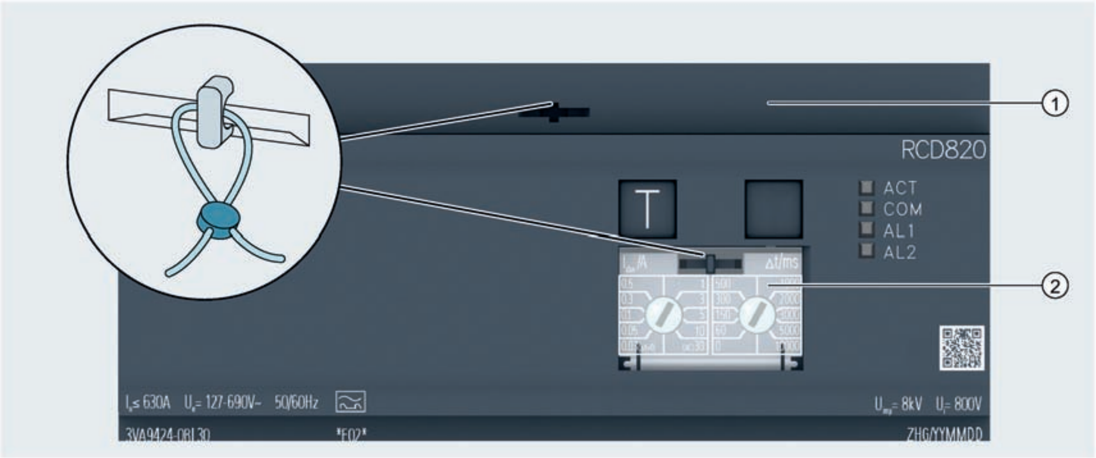

① Contact hazard protective cover over main current paths and auxiliary contacts

② Transparent protective cover over setting buttons

Transparent protective cover over setting buttons

In order to prevent unauthorized access to the setting buttons for $I_{\Delta n}$ and Δt, the transparent cover over the settings buttons can be optionally sealed.

Note

In order to protect personnel, it is necessary to seal the transparent protective cover so that the 30 mA setting range cannot be changed.

Contact hazard protective cover over main current paths and auxiliary contacts including sealing option

After the residual current device RCD820 has been mounted on the 3VA2 molded case circuit breaker, a contact hazard protective cover is installed over the main current paths to protect against direct contact. This cover can be sealed optionally in order to block any attempt to dismantle the residual current device from the molded case circuit breaker.

Terminals

Note

Cables for the following terminals must be routed separately from the main circuits. Their maximum cable length is 300 m.

A number of auxiliary contacts which perform a broad range of functions are located underneath the contact hazard protective cover.

Alarm switch

Floating auxiliary contacts for 3 different alarms are provided:

- AL1
  Signaling switch for pre-alarm threshold 1. This auxiliary switch operates as soon as the residual current exceeds 30 % of the operating current setting value.
- AL2
  Signaling switch for pre-alarm threshold 2. This auxiliary switch operates as soon as the residual current exceeds 60 % of the operating current setting value.
- TRIP-IND (TRIP INDICATOR)
  A tripped signal can be output via this auxiliary switch for connection to a warning lamp, for example. The switch operates as soon as the residual current reaches or exceeds the response current setting value and has therefore caused the residual current device to trip.

Switches with changeover contacts and screw-type connections are used as standard as auxiliary switches for pre-alarms and tripped signals.

The terminal designations of the relevant contact, the maximum rated voltage and the current carrying capacity are shown in the diagram below.

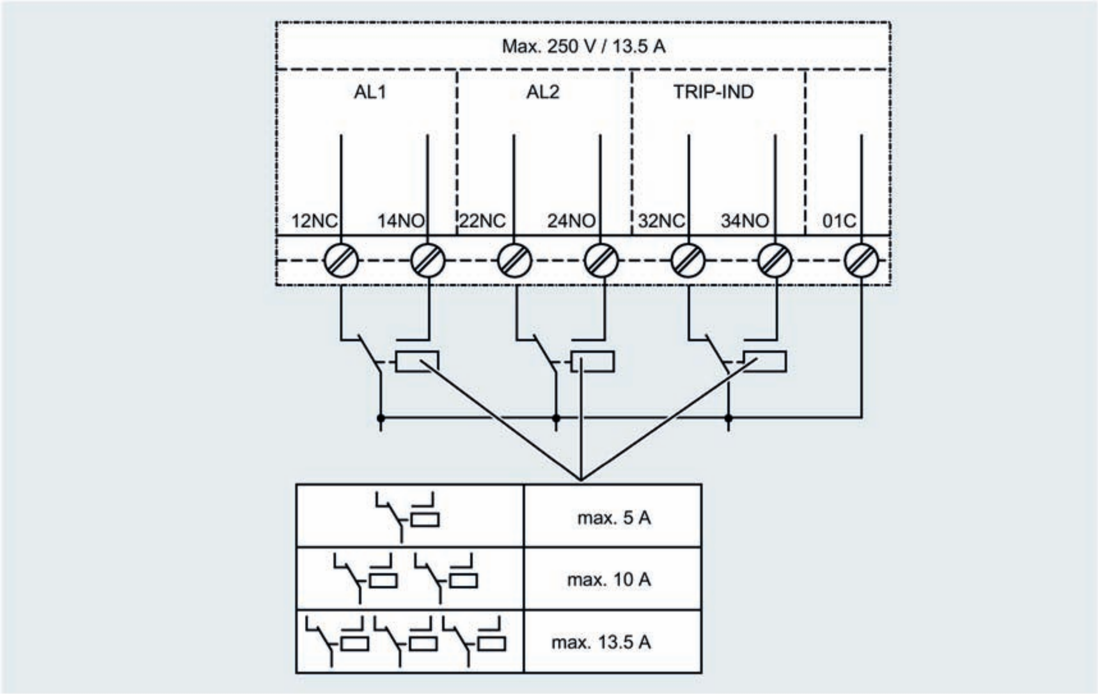

Each relay contact has a maximum rated operational current of 5 A at 230 V AC. Since the terminals have a maximum current carrying capacity of 13.5 A, the current flow across the common terminal (01C = Common) must be limited to 13.5 A when all three signaling switches are used.

The relays for the pre-alarm signals (AL1 and AL2) drop out again as soon as the residual current reaches or exceeds the relevant pre-alarm thresholds.

The relay for the tripped signal (TRIP-IND) drops out again as soon as the residual current device is reset again by means of the molded case circuit breaker handle, or the handle of the manual or motor operator.

Since the relay for the tripped signal (TRIP-IND) is a bistable relay, the relay contact states remain "stored" even in the event of a power outage. When the power supply recovers, the indicated relay contact states are those which existed before the power outage.

Other auxiliary inputs

Two further auxiliary inputs in the form of screw terminals are also provided:

REMOTE-T

The residual current device can be remotely tripped via this auxiliary input for test purposes ("Remote test button"), for example.

To utilize this function, the customer must connect, for example, a pushbutton (NO contact) to terminals 1Y1 and 1Y2 by means of a two-core, twisted cable which must not be more than 300 m in length. The switching contact should have a minimum breaking capacity of 5 V / 1 mA. The residual current device trips if the pushbutton is actuated for at least 2 seconds. The terminals 1Y1 and 1Y2 are galvanically isolated from the mains supply (functional extra low voltage, FELV).

In special cases, such as cable installation outdoors, the amplitude of overvoltages (e.g. overvoltages due to thunderstorms) between the conductor and ground must be limited to 2.5 kV by suitable routing of the cable or other protection measures.

Each residual current device requires a separate NO contact and cable for remote tripping. It is not possible to use one cable and connect two or more residual current devices in parallel.

It is necessary to use an unshielded cable or a shielded, twisted-pair cable with a maximum capacitance of 36 nF as well as a maximum resistance of 50 ohms (total length out and back).

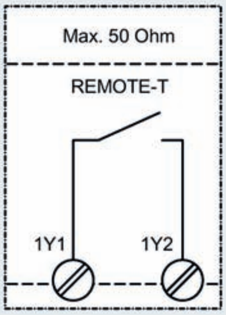

CB-S (Circuit Breaker Switch)

If the molded case circuit breaker / RCD820 assembly has an infeed from below (reverse feed), it is absolutely essential to install an auxiliary switch (internal accessory, circuit breaker with article number 3VA9988-0AA13) for interrogation of the circuit breaker status to allow resetting of the tripped signal. In this case, the "**normally closed** contact", i.e. cable at .1C and .2NC, of the changeover contact must be connected.

This switch is installed in the accessory compartment of the molded case circuit breaker. The auxiliary switch is then connected to terminals 2Y1 and 2Y2 of the floating contact CB-S. It is necessary to use an unshielded or shielded twisted-pair cable, no more than 1 m in length, with a maximum capacitance of 36 nF as well as a maximum resistance of 50 ohms (total length out and back).

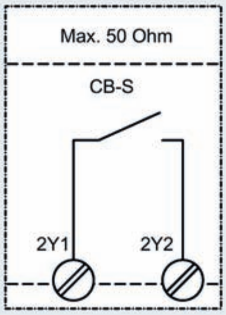

When the molded case circuit breaker is reset and then switched on again, the contacts .1C and .2NC of the auxiliary switch are closed and the tripped display on the residual current device is reset.

The auxiliary switch is not included in the scope of supply and must be ordered separately. The method for connecting the auxiliary switch to auxiliary contact CB-S is described in the Operating Instructions for the RCD820 residual current device.

Status indicators

The table below illustrates the behavior of pre-alarm and tripped signals on RCD820 devices in response to various user actions and residual currents.

Breaker status prior to user action			ON	ON	TRIP	OFF1)	ON	ON	ON	TRIP
Residual current I_Δ			≤ 30 % $I_{\Delta n}$	≤ 30 % $I_{\Delta n}$	≤ 30 % $I_{\Delta n}$	≤ 30 % $I_{\Delta n}$	60 % $I_{\Delta n}$ > I_Δ > 30 % $I_{\Delta n}$	≥ 60 % $I_{\Delta n}$	≥ 100 % $I_{\Delta n}$	≤ 30 % $I_{\Delta n}$
User action			None	RCD: REMOTE-T 1Y1—1Y2	MCCB: TRIP → OFF	MCCB: OFF → ON	None	None	None	MCCB: TRIP → OFF
Breaker status following user action			ON	TRIP	OFF1)	ON	ON	ON	TRIP	OFF2)
Signals at RCD820 following user action	LEDs									
	Pre-alarm 1	AL 1	☐	☐	☐	☐	🟨	🟨	☐	☐
	Pre-alarm 2	AL 2	☐	☐	☐	☐	☐	🟧	☐	☐
	Mechanical display									
	Tripped signal	TRIP	■	TRIP	TRIP	■	■	■	TRIP	■
	Alarm switches									
	Pre-alarm 1	AL 1	01C 12NC 14NO	01C 12NC 14NO	01C 12NC 14NO	01C 12NC 14NO	01C 12NC 14NO	01C 12NC 14NO	01C 12NC 14NO	01C 12NC 14NO
	Pre-alarm 2	AL 2	01C 22NC 24NO	01C 22NC 24NO	01C 22NC 24NO	01C 22NC 24NO	01C 22NC 24NO	01C 22NC 24NO	01C 22NC 24NO	01C 22NC 24NO
	Tripped signal	TRIP-IND	01C 32NC 34NO	01C 32NC 34NO	01C 32NC 34NO	01C 32NC 34NO	01C 32NC 34NO	01C 32NC 34NO	01C 32NC 34NO	01C 32NC 34NO

1) Infeed at top

2) Infeed at bottom

Cable installation

Cable ducts for bringing out cables are provided to the left and right on the residual current device.

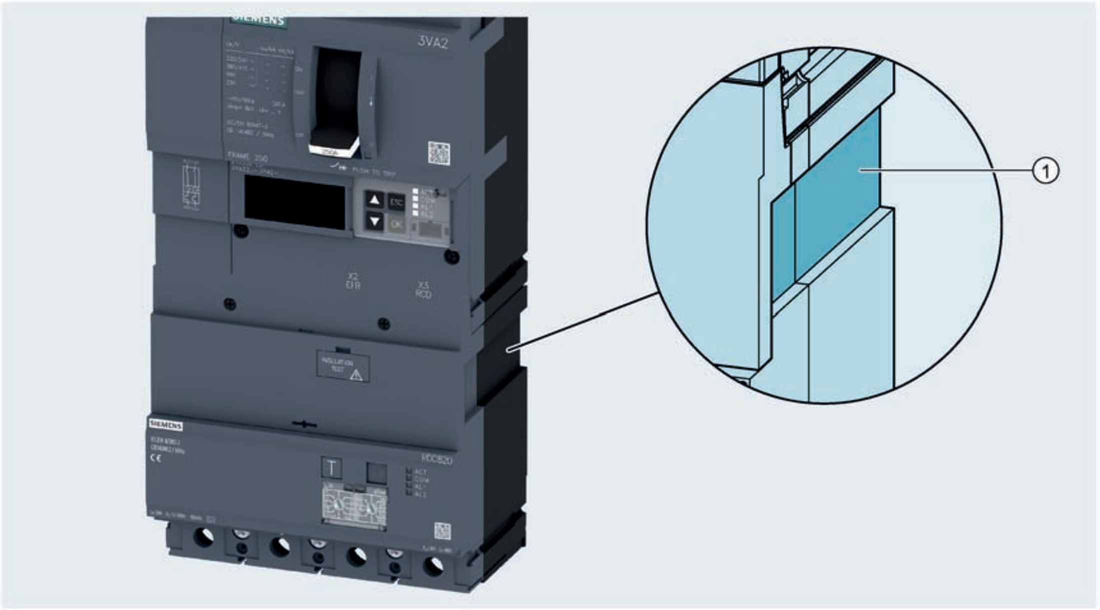

① Cable duct

Other labels on front panel

Approvals

The residual current device bears the CE mark. For an overview of all approvals, please refer to Appendix (Page 647).

For all queries relating to approvals, please contact Technical Support (Page 10).

Technical specifications

In ≤ …A:	Specifies the highest permissible rated operational current of the molded case circuit breaker with which the residual current device may be combined.
Ue ~ …V:	Specifies the operating voltage range of the residual current device.
…Hz:	Specifies the operating frequency range of the residual current device.
∿	Denotes the response behavior to residual currents.

Installation

Installation

Regardless of the type of connection technology installed on the 3VA2 molded case circuit breaker, the RCD820 is mounted underneath the electronic trip unit of the circuit breaker.

1. Dismantle the loadside connection components of the molded case circuit breaker and install the supplied connection components for the residual current device.
2. Insert the residual current device into the T slots of the molded case circuit breaker.

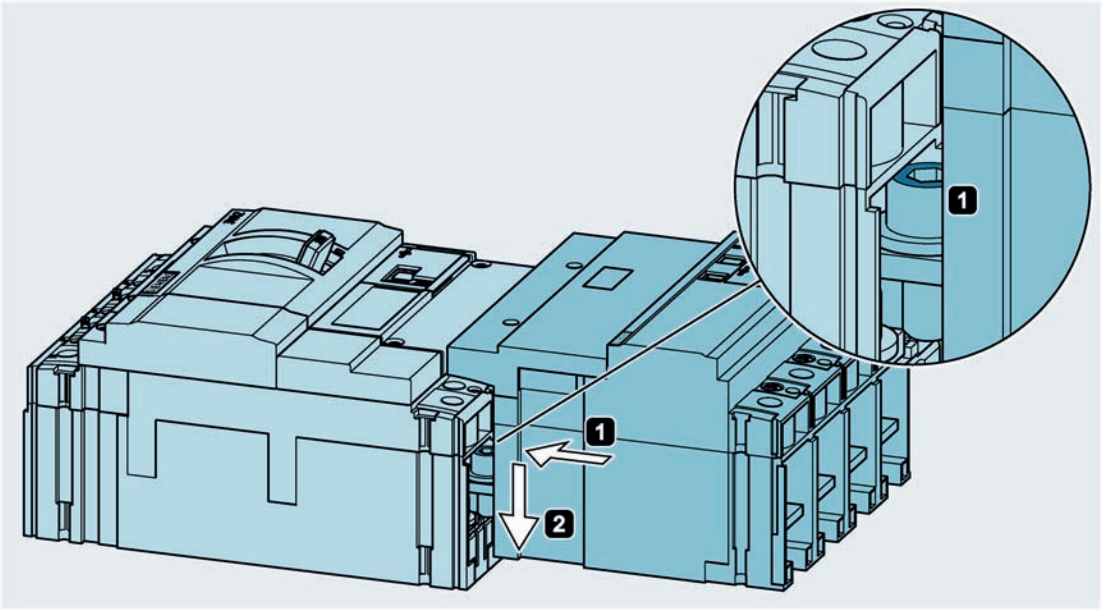

3. Push the residual current device backwards until its rear panel is flush with the rear panel of the molded case circuit breaker.
4. Screw the molded case circuit breaker to the residual current device. Special connecting screws are provided on the line side of the residual current device for this purpose.
5. Place a contact hazard protective cover over the circuit breaker/RCD assembly.
6. Reinstall the loadside connection components of the molded case circuit breaker at the outgoing feeder end of the residual current device.
7. Attach the assembly to a mounting plate using the mounting screws.

Note

Since the outgoing feeder end of the residual current device has exactly the same connection contours as the 3VA2 molded case circuit breaker, all connection accessories, such as phase barriers and terminal covers, can also be mounted on the residual current device.

Installation of the RCD-ETU connecting cable

1. Remove the contact hazard protective cover.
2. Open the slide over the interface <X3 RCD>.
   The slide is fitted as a protective guard (e.g. to protect the interface against soiling).

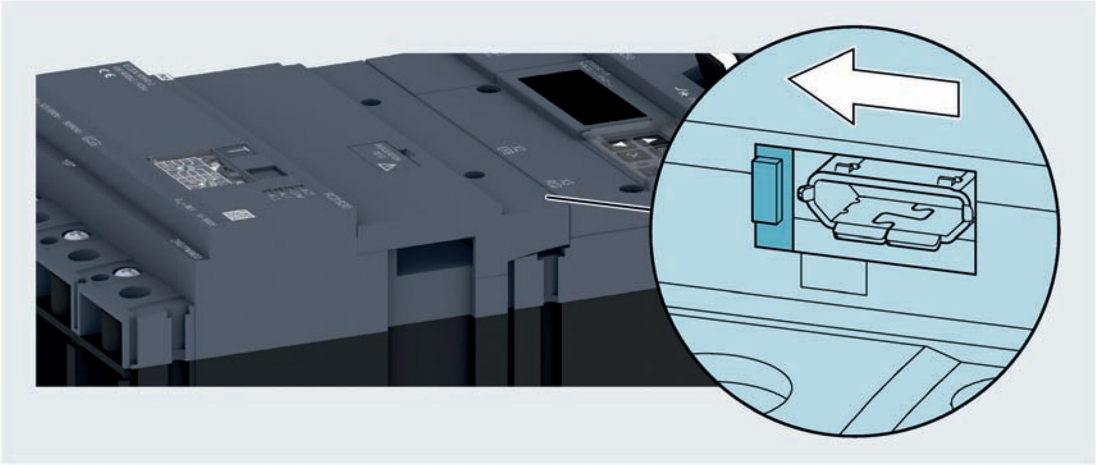

3. Insert one end of the connecting cable into the interface on the residual current device.
   The interfaces and the connecting cable are labeled to ensure that the cable ends are inserted in the right interfaces.

Note

Plug in or remove the RCD-ETU cable only when the residual current device is deenergized.

---

4. Insert the other end of the connecting cable into the interface <X3 RCD> on the ETU.

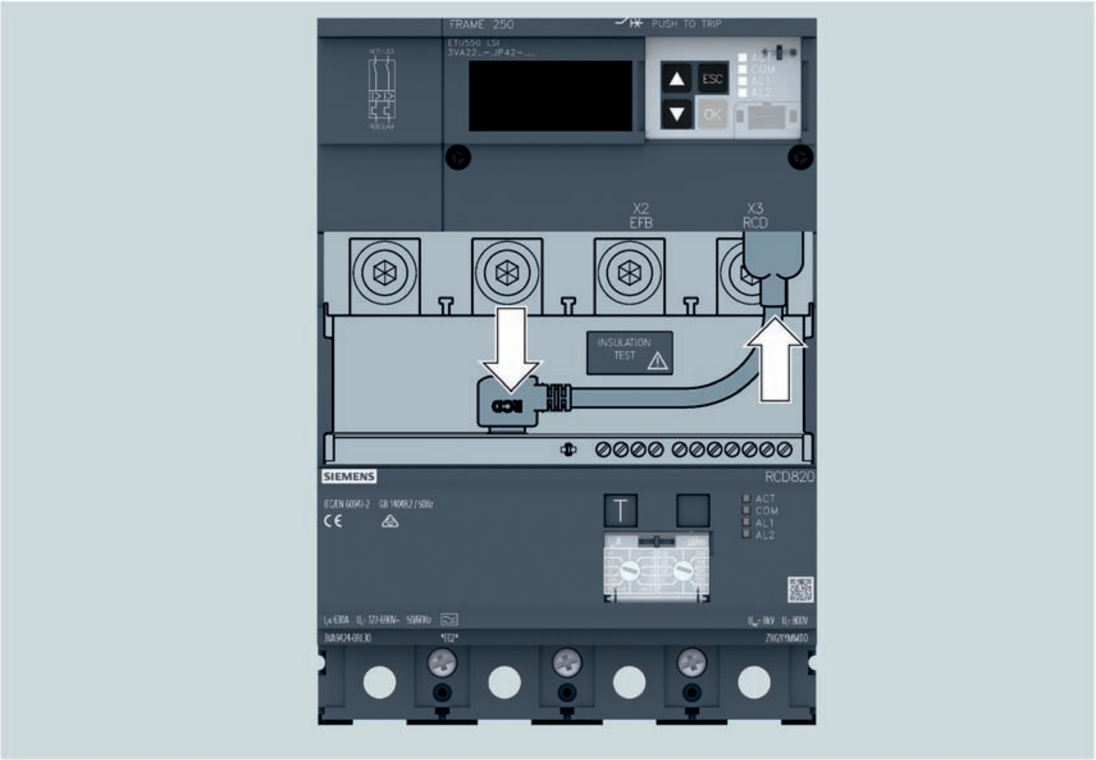

The RCD-to-ETU connecting cable is free of silicone and halogen and is electrically isolated from the main circuits.

The connecting cable is included in the scope of supply.

Tripping

The residual current device utilizes the maglatch of the electronic trip unit (ETU) in order to trip the molded case circuit breaker. It therefore needs to be connected to the ETU of the molded case circuit breaker. This connection is made by means of the RCD-ETU connecting cable.

Use of the residual current device as a pure display unit

The RCD820 residual current device can also operate as a pure display unit without a tripping function, i.e. it detects and signals residual currents, but does not trip the molded case circuit breaker or interrupt the circuit.

If the RCD820 device is to operate as a pure display unit, the connecting cable between the residual current device and the ETU of the molded case circuit breaker can be omitted. With the exception of its communications interface functionality, the residual current device can perform all its normal functions (e.g. status signaling via LEDs or alarm switches) in "display mode". Since there is no connection between the RCD and the ETU, the LED "ACT" flashes continuously and the LED "COM" is not illuminated even if a 5-series or 8-series ETU is installed.

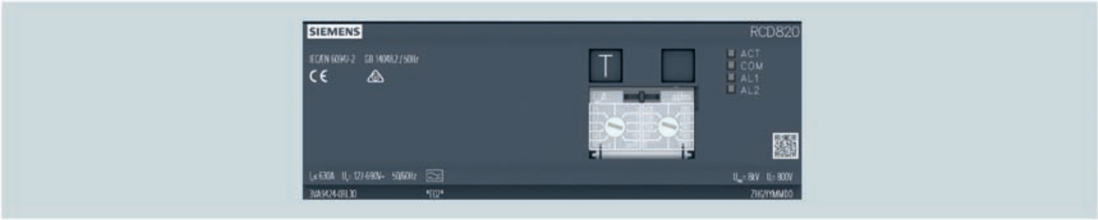

Communications interface

The RCD-ETU connecting cable not only carries the trip command, but also acts as the communications interface between the residual current device and the 3VA communication system.

Precondition for interface functionality:

- The 3VA2 molded case circuit breaker is equipped with a communication-capable, electronic trip unit (ETU 5-series or 8-series).
- The molded case circuit breaker is linked to the communication system via a COM060 communication module.

If the residual current device is linked to the communication system, the link can be used not only to interrogate the device for important status, diagnostic, maintenance and identification data, but also to transmit commands.

The residual current device is normally supplied with power by the main current paths. When the molded case circuit breaker is switched off, the power supply will be interrupted if the feed is at the top. In order to maintain the link to the communication system when the power supply from the main current paths is disconnected, the residual current device is supplied with the necessary power by the COM060 communication module.

The table below provides an overview of all the functions and data which are available in the residual current device environment:

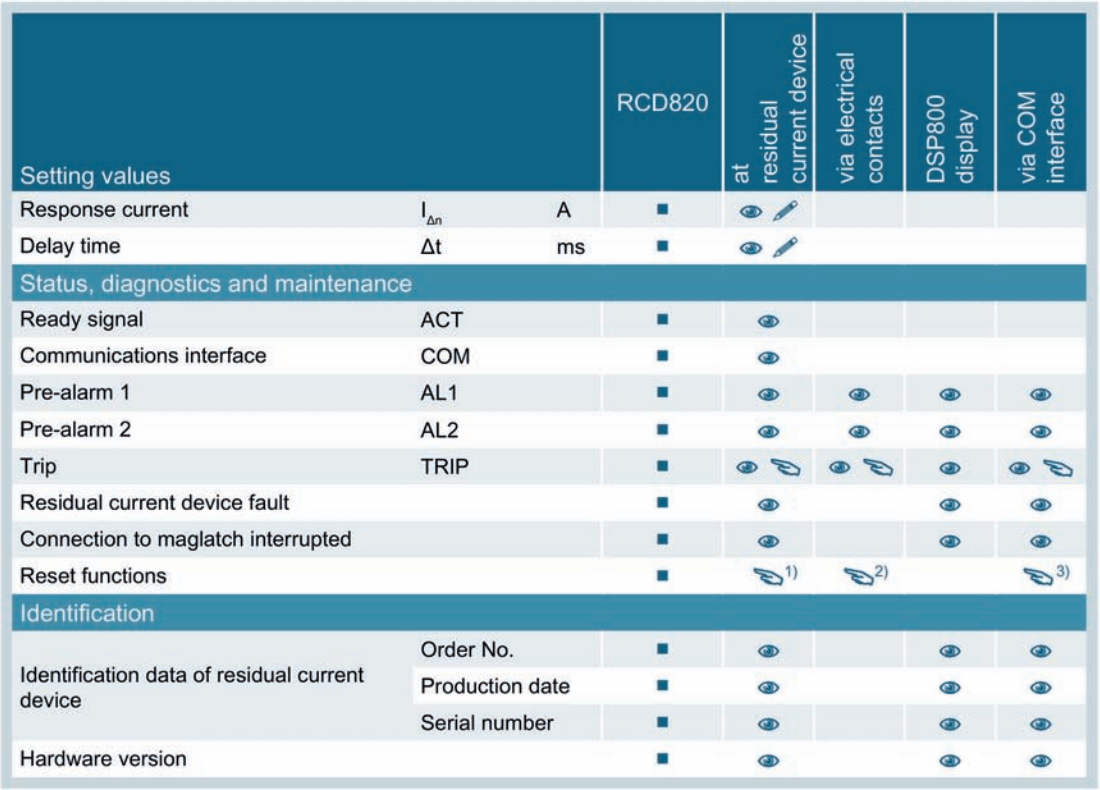

Setting values			RCD820	at residual current device	via electrical contacts	DSP800 display	via COM interface
Response current	$I_{\Delta n}$	A	■	👁 ✎			
Delay time	Δt	ms	■	👁 ✎			
Status, diagnostics and maintenance							
Ready signal	ACT		■	👁			
Communications interface	COM		■	👁			
Pre-alarm 1	AL1		■	👁	👁	👁	👁
Pre-alarm 2	AL2		■	👁	👁	👁	👁
Trip	TRIP		■	👁 ☞	👁 ☞	👁	👁 ☞
Residual current device fault			■	👁		👁	👁
Connection to maglatch interrupted			■	👁		👁	👁
Reset functions			■	☞ 1)	☞ 2)		☞ 3)
Identification							
Identification data of residual current device	Order No.		■	👁		👁	👁
	Production date		■	👁		👁	👁
	Serial number		■	👁		👁	👁
Hardware version			■	👁		👁	👁

👁	Value can be read
✎	Value can be edited
☞	Commands

1) Reset by means of the molded case circuit breaker handle, or the handle of the manual or motor operator

2) Reset in combination with motor operators

3) On request

4.8.2.5 Special operating modes of residual current devices

Residual current devices also function in 1 and 2-phase operation. They are unrestricted in functionality, including the test circuit, if at least 2 conductors are connected (2-pole operation).

The phases can be selected freely.

Please note the following:

1. Adhere to the permissible rated operational voltage.
2. If a connection to the N pole (N) is made in a 4-pole MCCB-RCD assembly, the current setting of the N pole determines the maximum current carrying capacity of the circuit.

If the N pole is protected, the 100% setting (protection) is recommended with the corresponding cable cross-section in the N pole. According to IEC 60947, the neutral conductor must be connected to the designated terminal in the case of a 4-pole breaker. Connecting a line conductor to the switching pole labeled N is not permitted.

3. The same conditions apply in 1 or 2-phase operation as in 3-phase operation with respect to the parameter settings of the residual current device ($I_{\Delta n}$ or Δt) or the trip unit of the molded case circuit breaker (e.g. I_r, I_i).

Connection of residual current device for 1-phase operation

The following 3 and 4-pole molded case circuit breakers equipped with a residual current device can be operated in a single phase (L to N) with 2-pole switching:

- Loadside residual current devices for 3VA1: RCD320 and RCD520
  Permissible rated operational voltage: 100 – 277 VAC 50/60 Hz
- Loadside residual current devices for 3VA2: RCD820
  Permissible rated operational voltage: 100 – 400 VAC 50/60 Hz

Wiring example for 1-phase operation, 2-pole switching (3 and 4-pole molded case circuit breakers)

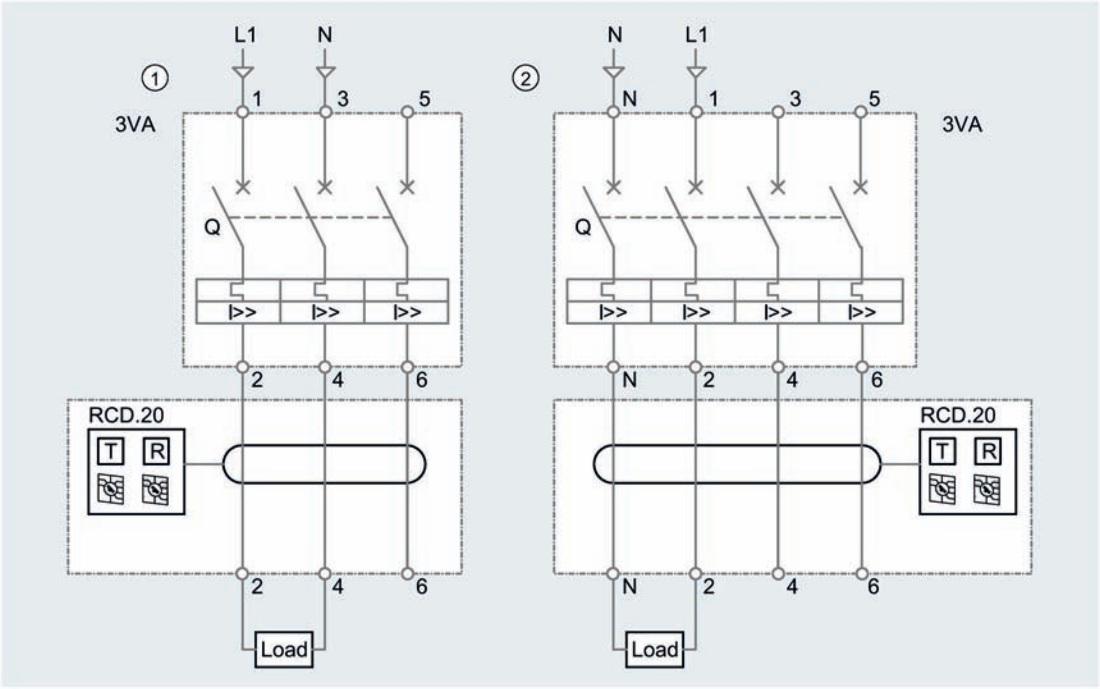

① 3-pole

② 4-pole

Connection of residual current device for 2-phase operation

The following 3 and 4-pole molded case circuit breakers equipped with a residual current device can be operated in two phases (L to L) with 2-pole switching:

- Loadside residual current devices for 3VA1: RCD320 and RCD520
  Permissible rated operational voltage: 127 – 480 VAC 50/60 Hz
- Side mounted residual current devices for 3VA1: RCD310 and RCD510
  Permissible rated operational voltage: 127 – 480 VAC 50/60 Hz
- Loadside residual current devices for 3VA2: RCD820
  Permissible rated operational voltage: 127 – 690 VAC 50/60 Hz

Wiring example for 2-phase operation, 2-pole switching (3 and 4-pole molded case circuit breakers)

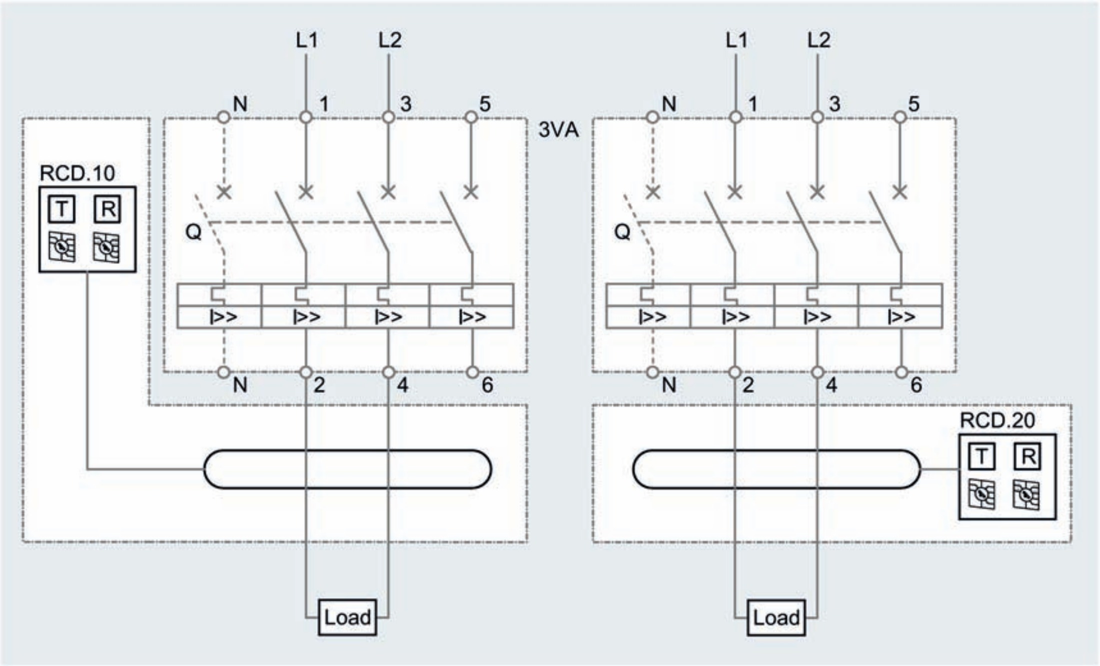

4.8.2.6 Technical specifications

RCD type A

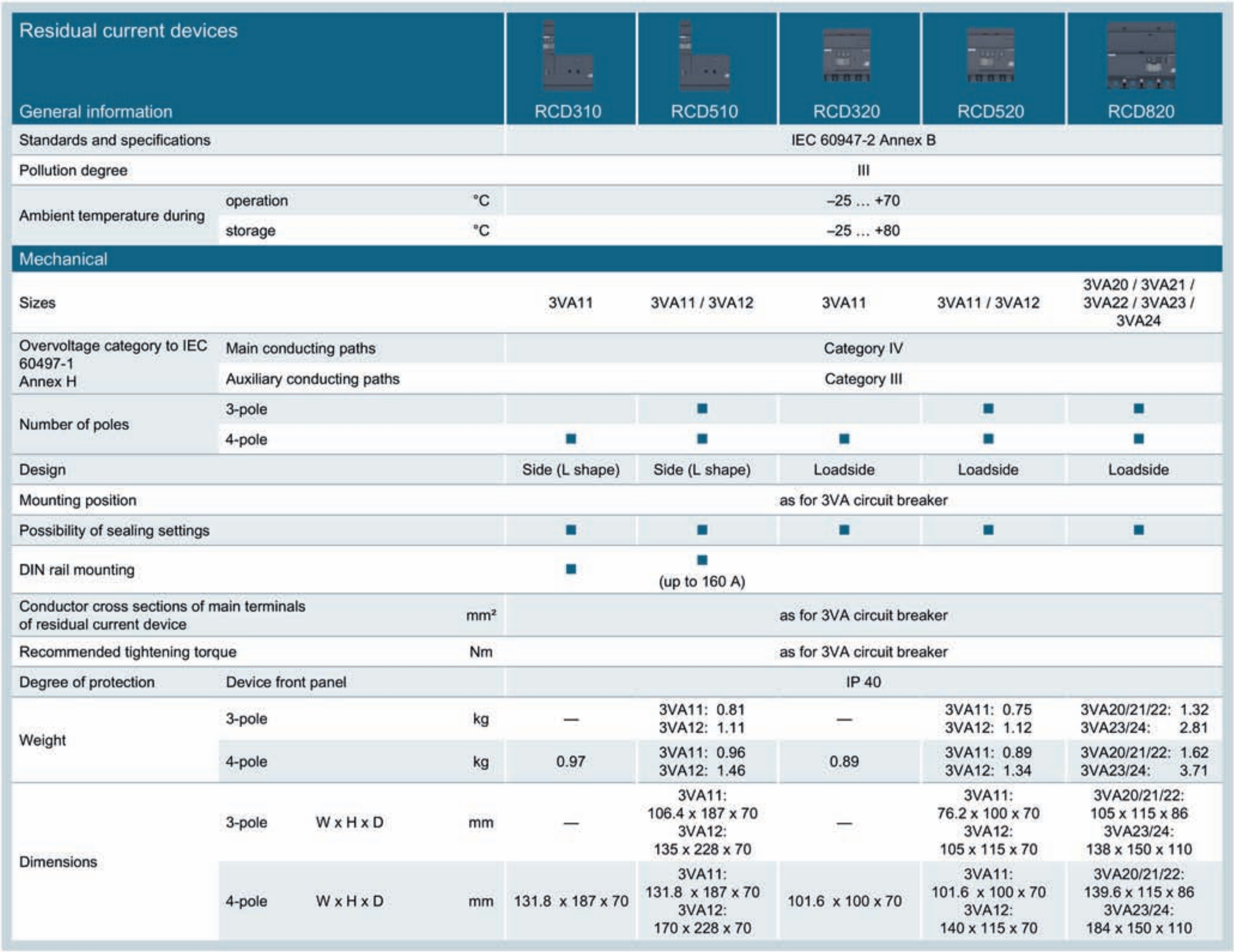

Residual current devices General information				RCD310	RCD510	RCD320	RCD520	RCD820
Standards and specifications				IEC 60947-2 Annex B				
Pollution degree				III				
Ambient temperature during	operation		°C	–25 … +70				
	storage		°C	–25 … +80				
Mechanical								
Sizes				3VA11	3VA11 / 3VA12	3VA11	3VA11 / 3VA12	3VA20 / 3VA21 / 3VA22 / 3VA23 / 3VA24
Overvoltage category to IEC 60497-1 Annex H	Main conducting paths			Category IV				
	Auxiliary conducting paths			Category III				
Number of poles	3-pole				■		■	■
	4-pole			■	■	■	■	■
Design				Side (L shape)	Side (L shape)	Loadside	Loadside	Loadside
Mounting position				as for 3VA circuit breaker				
Possibility of sealing settings				■	■	■	■	■
DIN rail mounting				■	■ (up to 160 A)			
Conductor cross sections of main terminals of residual current device			mm²	as for 3VA circuit breaker				
Recommended tightening torque			Nm	as for 3VA circuit breaker				
Degree of protection	Device front panel			IP 40				
Weight	3-pole		kg	—	3VA11: 0.81 3VA12: 1.11	—	3VA11: 0.75 3VA12: 1.12	3VA20/21/22: 1.32 3VA23/24: 2.81
	4-pole		kg	0.97	3VA11: 0.96 3VA12: 1.46	0.89	3VA11: 0.89 3VA12: 1.34	3VA20/21/22: 1.62 3VA23/24: 3.71
Dimensions	3-pole	W x H x D	mm	—	3VA11: 106.4 x 187 x 70 3VA12: 135 x 228 x 70	—	3VA11: 76.2 x 100 x 70 3VA12: 105 x 115 x 70	3VA20/21/22: 105 x 115 x 86 3VA23/24: 138 x 150 x 110
	4-pole	W x H x D	mm	131.8 x 187 x 70	3VA11: 131.8 x 187 x 70 3VA12: 170 x 228 x 70	101.6 x 100 x 70	3VA11: 101.6 x 100 x 70 3VA12: 140 x 115 x 70	3VA20/21/22: 139.6 x 115 x 86 3VA23/24: 184 x 150 x 110

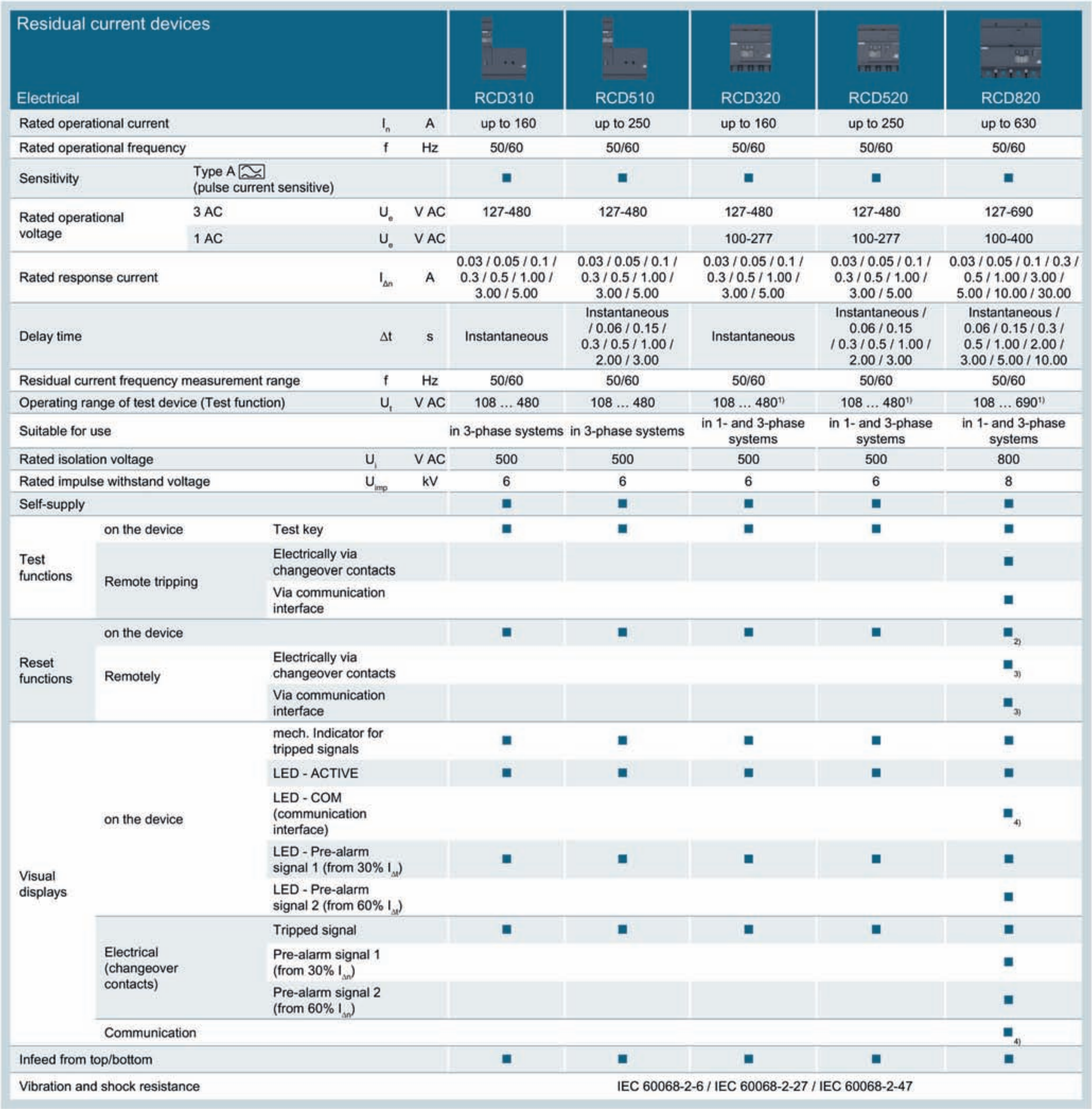

Residual current devices Electrical					RCD310	RCD510	RCD320	RCD520	RCD820
Rated operational current			I_n	A	up to 160	up to 250	up to 160	up to 250	up to 630
Rated operational frequency			f	Hz	50/60	50/60	50/60	50/60	50/60
Sensitivity	Type A (pulse current sensitive)				■	■	■	■	■
Rated operational voltage	3 AC		U_e	V AC	127-480	127-480	127-480	127-480	127-690
	1 AC		U_e	V AC			100-277	100-277	100-400
Rated response current			$I_{\Delta n}$	A	0.03 / 0.05 / 0.1 / 0.3 / 0.5 / 1.00 / 3.00 / 5.00	0.03 / 0.05 / 0.1 / 0.3 / 0.5 / 1.00 / 3.00 / 5.00	0.03 / 0.05 / 0.1 / 0.3 / 0.5 / 1.00 / 3.00 / 5.00	0.03 / 0.05 / 0.1 / 0.3 / 0.5 / 1.00 / 3.00 / 5.00	0.03 / 0.05 / 0.1 / 0.3 / 0.5 / 1.00 / 3.00 / 5.00 / 10.00 / 30.00
Delay time			Δt	s	Instantaneous	Instantaneous / 0.06 / 0.15 / 0.3 / 0.5 / 1.00 / 2.00 / 3.00	Instantaneous	Instantaneous / 0.06 / 0.15 / 0.3 / 0.5 / 1.00 / 2.00 / 3.00	Instantaneous / 0.06 / 0.15 / 0.3 / 0.5 / 1.00 / 2.00 / 3.00 / 5.00 / 10.00
Residual current frequency measurement range			f	Hz	50/60	50/60	50/60	50/60	50/60
Operating range of test device (Test function)			U_t	V AC	108 … 480	108 … 480	108 … 480[1]	108 … 480[1]	108 … 690[1]
Suitable for use					in 3-phase systems	in 3-phase systems	in 1- and 3-phase systems	in 1- and 3-phase systems	in 1- and 3-phase systems
Rated isolation voltage			U_i	V AC	500	500	500	500	800
Rated impulse withstand voltage			U_{imp}	kV	6	6	6	6	8
Self-supply					■	■	■	■	■
Test functions	on the device	Test key			■	■	■	■	■
	Remote tripping	Electrically via changeover contacts							■
		Via communication interface							■
Reset functions	on the device				■	■	■	■	■[2]
	Remotely	Electrically via changeover contacts							■[3]
		Via communication interface							■[3]
Visual displays	on the device	mech. Indicator for tripped signals			■	■	■	■	■
		LED - ACTIVE			■	■	■	■	■
		LED - COM (communication interface)							■[4]
		LED - Pre-alarm signal 1 (from 30% $I_{\Delta n}$)			■	■	■	■	■
		LED - Pre-alarm signal 2 (from 60% $I_{\Delta n}$)							■
	Electrical (changeover contacts)	Tripped signal			■	■	■	■	■
		Pre-alarm signal 1 (from 30% $I_{\Delta n}$)							■
		Pre-alarm signal 2 (from 60% $I_{\Delta n}$)							■
	Communication								■[4]
Infeed from top/bottom					■	■	■	■	■
Vibration and shock resistance					IEC 60068-2-6 / IEC 60068-2-27 / IEC 60068-2-47				

[1] 85 V AC minimum voltage (with phase to neutral conductor) for operation of the test function

[2] Reset by means of the circuit breaker handle

[3] Via MO or SEO

[4] Requirement: The 3VA2 molded case circuit breaker is equipped with an ETU 5-series or 8-series

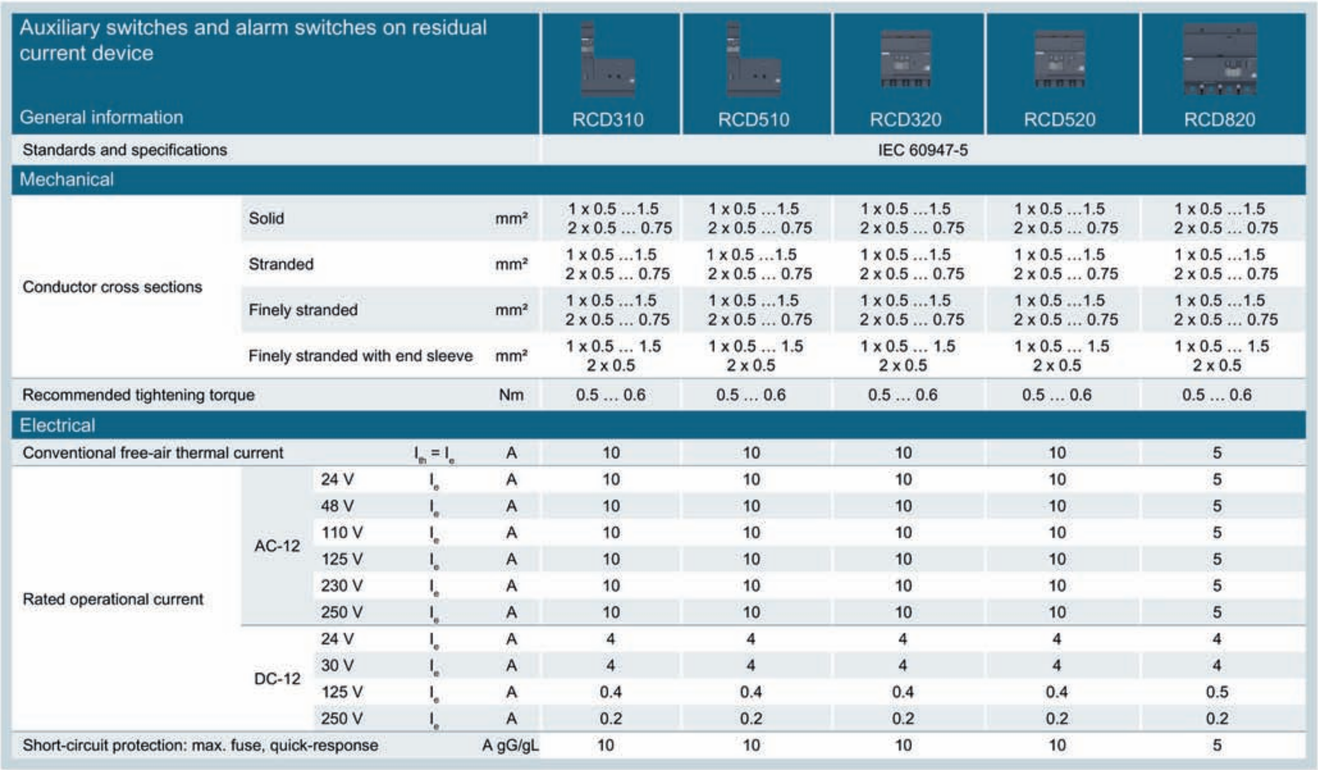

Auxiliary switches and alarm switches on residual current device General information					RCD310	RCD510	RCD320	RCD520	RCD820
Standards and specifications					IEC 60947-5				
Mechanical									
Conductor cross sections	Solid			mm²	1 x 0.5 ...1.5 2 x 0.5 ... 0.75	1 x 0.5 ...1.5 2 x 0.5 ... 0.75	1 x 0.5 ...1.5 2 x 0.5 ... 0.75	1 x 0.5 ...1.5 2 x 0.5 ... 0.75	1 x 0.5 ...1.5 2 x 0.5 ... 0.75
	Stranded			mm²	1 x 0.5 ...1.5 2 x 0.5 ... 0.75	1 x 0.5 ...1.5 2 x 0.5 ... 0.75	1 x 0.5 ...1.5 2 x 0.5 ... 0.75	1 x 0.5 ...1.5 2 x 0.5 ... 0.75	1 x 0.5 ...1.5 2 x 0.5 ... 0.75
	Finely stranded			mm²	1 x 0.5 ...1.5 2 x 0.5 ... 0.75	1 x 0.5 ...1.5 2 x 0.5 ... 0.75	1 x 0.5 ...1.5 2 x 0.5 ... 0.75	1 x 0.5 ...1.5 2 x 0.5 ... 0.75	1 x 0.5 ...1.5 2 x 0.5 ... 0.75
	Finely stranded with end sleeve			mm²	1 x 0.5 ... 1.5 2 x 0.5	1 x 0.5 ... 1.5 2 x 0.5	1 x 0.5 ... 1.5 2 x 0.5	1 x 0.5 ... 1.5 2 x 0.5	1 x 0.5 ... 1.5 2 x 0.5
Recommended tightening torque				Nm	0.5 ... 0.6	0.5 ... 0.6	0.5 ... 0.6	0.5 ... 0.6	0.5 ... 0.6
Electrical									
Conventional free-air thermal current			$I_{th} = I_e$	A	10	10	10	10	5
Rated operational current	AC-12	24 V	I_e	A	10	10	10	10	5
		48 V	I_e	A	10	10	10	10	5
		110 V	I_e	A	10	10	10	10	5
		125 V	I_e	A	10	10	10	10	5
		230 V	I_e	A	10	10	10	10	5
		250 V	I_e	A	10	10	10	10	5
	DC-12	24 V	I_e	A	4	4	4	4	4
		30 V	I_e	A	4	4	4	4	4
		125 V	I_e	A	0.4	0.4	0.4	0.4	0.5
		250 V	I_e	A	0.2	0.2	0.2	0.2	0.2
Short-circuit protection: max. fuse, quick-response				A gG/gL	10	10	10	10	5

RCD type B

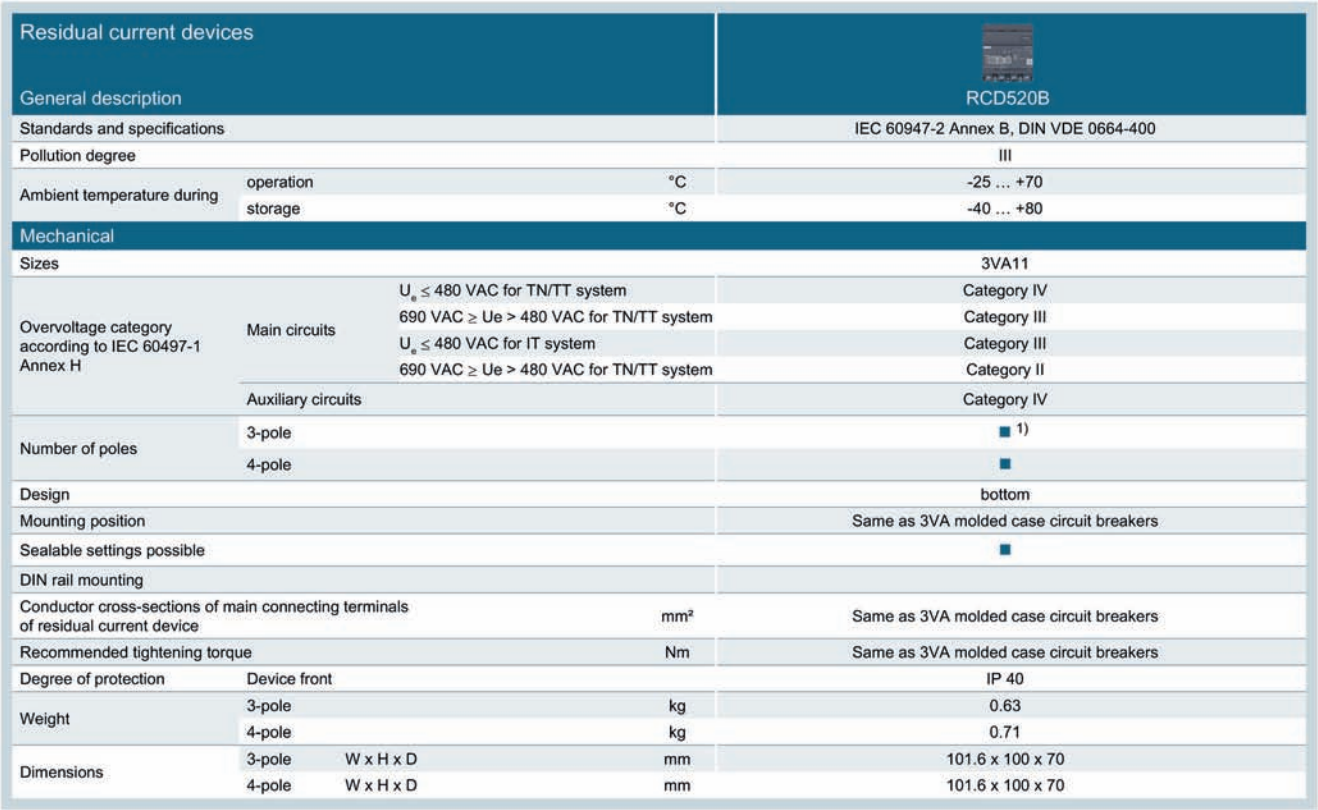

Residual current devices General description				RCD520B
Standards and specifications				IEC 60947-2 Annex B, DIN VDE 0664-400
Pollution degree				III
Ambient temperature during	operation		°C	-25 … +70
	storage		°C	-40 … +80
Mechanical				
Sizes				3VA11
Overvoltage category according to IEC 60497-1 Annex H	Main circuits	$U_e \leq$ 480 VAC for TN/TT system		Category IV
		690 VAC ≥ Ue > 480 VAC for TN/TT system		Category III
		$U_e \leq$ 480 VAC for IT system		Category III
		690 VAC ≥ Ue > 480 VAC for TN/TT system		Category II
	Auxiliary circuits			Category IV
Number of poles	3-pole			■ 1)
	4-pole			■
Design				bottom
Mounting position				Same as 3VA molded case circuit breakers
Sealable settings possible				■
DIN rail mounting				
Conductor cross-sections of main connecting terminals of residual current device			mm²	Same as 3VA molded case circuit breakers
Recommended tightening torque			Nm	Same as 3VA molded case circuit breakers
Degree of protection	Device front			IP 40
Weight	3-pole		kg	0.63
	4-pole		kg	0.71
Dimensions	3-pole	W x H x D	mm	101.6 x 100 x 70
	4-pole	W x H x D	mm	101.6 x 100 x 70

1) The 3-pole version of RCD520B is installed in a 4-pole enclosure

Residual current devices Electrical						 RCD520B
Rated operational current				I_n	A	Up to 160
Rated operational frequency				f	Hz	50/60
Sensitivity		Type B				■
		Type B+				■
Rated operational voltage		Type B	L-L	U_e	V AC	127 ... 690
			L-N			100 ... 400
		Type B+	L-L	U_e	V AC	50 ... 690
			L-N			85 ... 400
Rated response current		Type B		$I_{\Delta n}$	A	0.03 / 0.05 / 0.1 / 0.3 / 0.5 / 1.00 / 3.00 / 5.00
		Type B+		$I_{\Delta n}$	A	0.03 / 0.05 / 0.1 / 0.3
Delay time				Δt	s	instantaneous 0.06 / 0.15 / 0.3 / 0.5 / 1.00 / 2.00 / 3.00 / 5.00 / 10.00
Measuring range of residual current frequency		Type B / Type B+		f	kHz	0 ... 100
Operating range of test function		Type B	L-L	U_t	V AC	108
			L-N	U_t	V AC	85
		Type B+	L-L	U_t	V AC	50
			L-N	U_t	V AC	85
Suitable for use						in 1-phase and 3-phase systems
Rated insulation voltage				U_i	V AC	800
Rated impulse withstand voltage				U_{imp}	kV	6
Self-powered						■
Test functionality	On the device	Test key				■
	Remote tripping	Electrical via changeover contacts				
		Via communication link				
Reset functionality	On the device					■
	Remotely	Electrical via changeover contacts				
		Via communication link				
Optical indicators	On the device	Mech. indicator for tripped signals				■
		LED ACTIVE				■
		LED COM (communication link)				
		LED PRE-ALARM (from 30% $I_{\Delta n}$)				■
		LED MONITORING				■
	Electrical (changeover contacts)	Tripped signal				■
		Pre-alarm 1 (from 30% $I_{\Delta n}$)				■
		Pre-alarm 2 (from 60% $I_{\Delta n}$)				
	Communication					
Incoming supply from top/bottom						■
Vibration resistance and shock resistance						IEC 60068-2-6 / IEC60068-2-27 / IEC600068-2-47

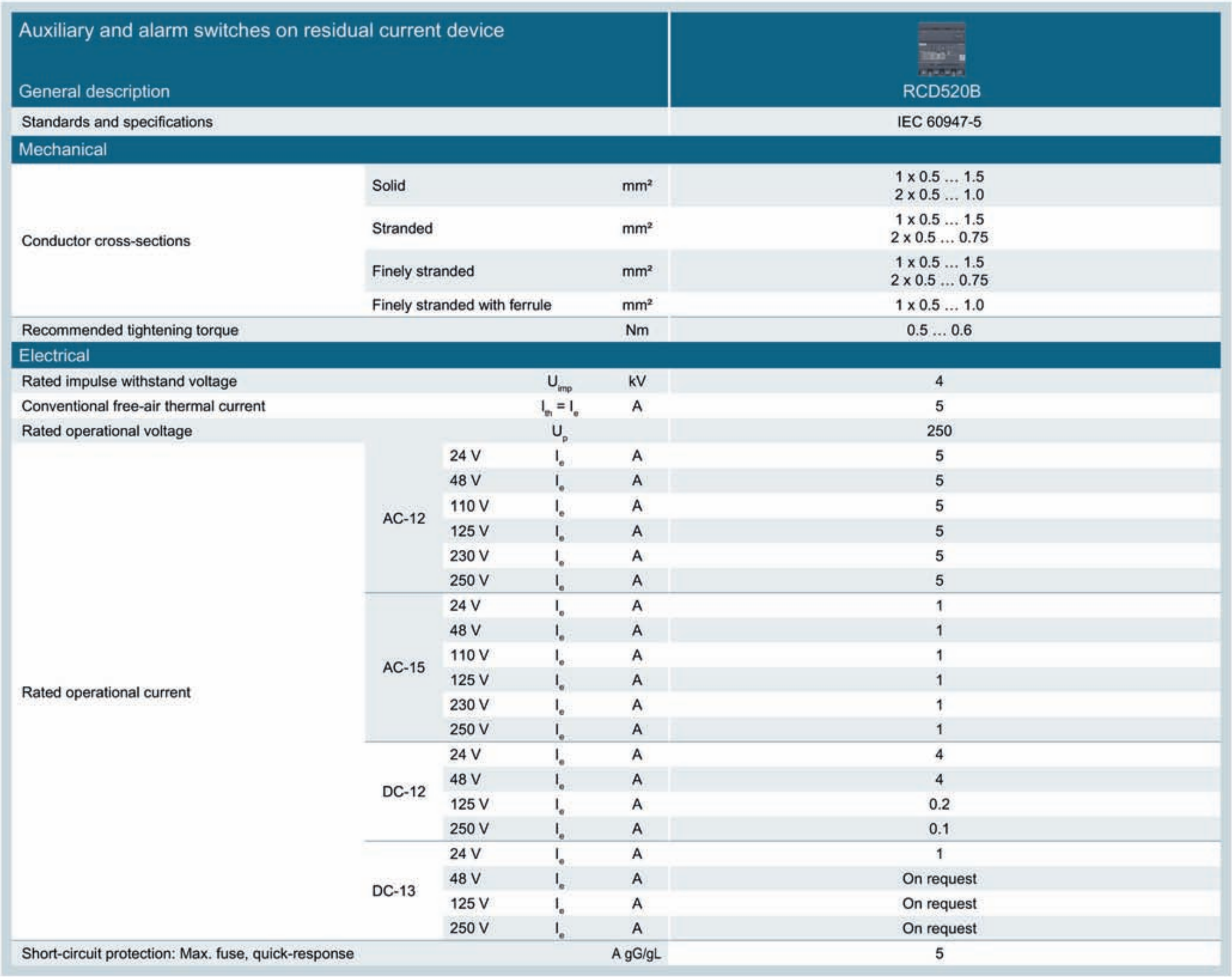

Auxiliary and alarm switches on residual current device General description					RCD520B
Standards and specifications					IEC 60947-5
Mechanical					
Conductor cross-sections	Solid			mm²	1 x 0.5 ... 1.5 2 x 0.5 ... 1.0
	Stranded			mm²	1 x 0.5 ... 1.5 2 x 0.5 ... 0.75
	Finely stranded			mm²	1 x 0.5 ... 1.5 2 x 0.5 ... 0.75
	Finely stranded with ferrule			mm²	1 x 0.5 ... 1.0
Recommended tightening torque				Nm	0.5 ... 0.6
Electrical					
Rated impulse withstand voltage			U_{imp}	kV	4
Conventional free-air thermal current			$I_{th} = I_e$	A	5
Rated operational voltage			U_p		250
Rated operational current	AC-12	24 V	I_e	A	5
		48 V	I_e	A	5
		110 V	I_e	A	5
		125 V	I_e	A	5
		230 V	I_e	A	5
		250 V	I_e	A	5
	AC-15	24 V	I_e	A	1
		48 V	I_e	A	1
		110 V	I_e	A	1
		125 V	I_e	A	1
		230 V	I_e	A	1
		250 V	I_e	A	1
	DC-12	24 V	I_e	A	4
		48 V	I_e	A	4
		125 V	I_e	A	0.2
		250 V	I_e	A	0.1
	DC-13	24 V	I_e	A	1
		48 V	I_e	A	On request
		125 V	I_e	A	On request
		250 V	I_e	A	On request
Short-circuit protection: Max. fuse, quick-response				A gG/gL	5

4.8.3 Modular residual current device

Thanks to their design, the modular residual current devices (MRCD) type A 5SV8101-6KK and type B (5SV8101-4KK, 5SV8111-4KK / 0 to 2000 Hz) are compatible with all molded case circuit breaker designs and can therefore be combined with 3VA1 molded case circuit breakers/switch disconnectors and with molded case circuit breakers from the 3VA2 range.

The MRCD is installed on a DIN rail (35 mm) as close as possible to the molded case circuit breaker/switch disconnector.

Operating principle

The MRCD is connected to a summation current transformer through which all live conductors (including neutral conductor where applicable) must be routed. The residual current is detected in the summation current transformer and transferred to the MRCD. If this current exceeds the limit value for the set rated residual current $I_{\Delta n}$, the residual current device trips the molded case circuit breaker/switch disconnector by means of a shunt trip or undervoltage release.

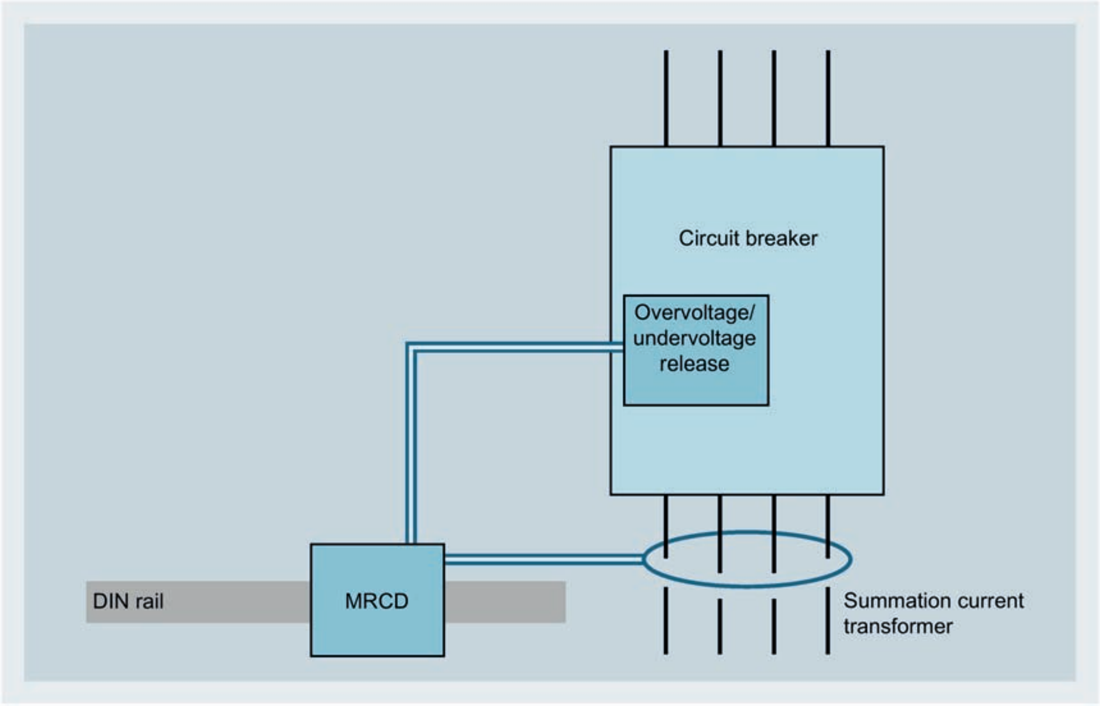

Front view

Parameterization of the MRCD

For a description of MRCD parameterization procedures and other operating options, please refer to the operating instructions for the unit.

Summation current transformer

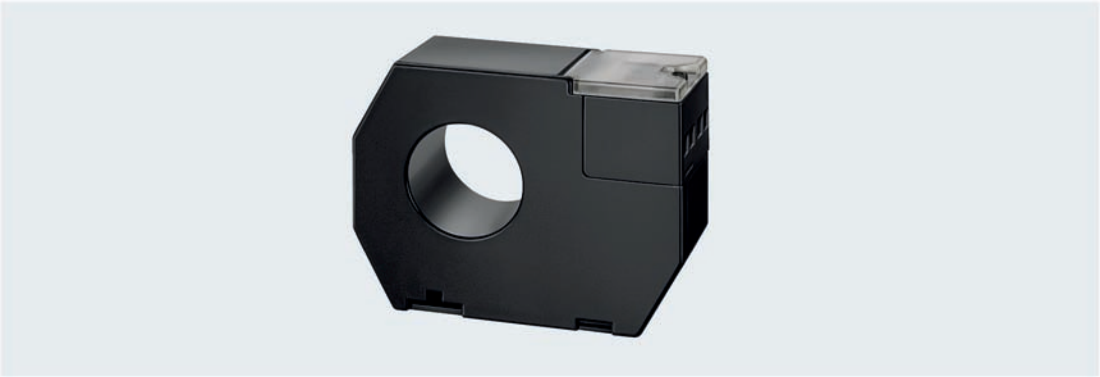

Suitable summation current transformers

Depending on the rated operational current or maximum current of the circuit to be monitored, the following summation current transformers can be used:

MRCD type A:

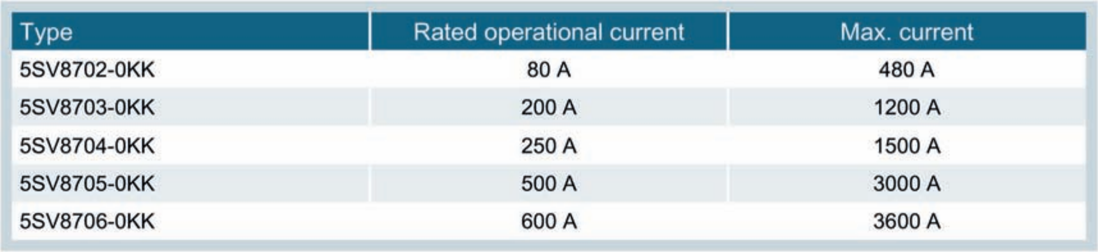

Type	Rated operational current	Max. current
5SV8702-0KK	80 A	480 A
5SV8703-0KK	200 A	1200 A
5SV8704-0KK	250 A	1500 A
5SV8705-0KK	500 A	3000 A
5SV8706-0KK	600 A	3600 A

MRCD type B (5SV8101-4KK, 5SV8111-4KK / 0 … 2000 Hz):

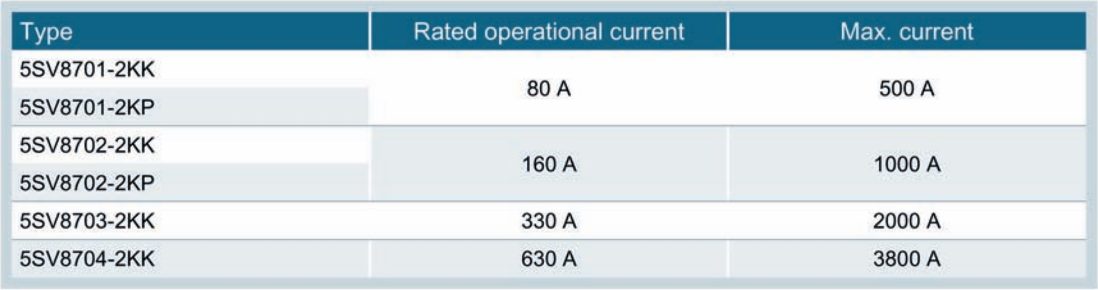

Type	Rated operational current	Max. current
5SV8701-2KK	80 A	500 A
5SV8701-2KP		
5SV8702-2KK	160 A	1000 A
5SV8702-2KP		
5SV8703-2KK	330 A	2000 A
5SV8704-2KK	630 A	3800 A

Alignment of conductors in the summation current transformer

In order to prevent measurement errors or spurious tripping, it is absolutely essential to ensure that the conductors are properly aligned or arranged in the summation current transformer.

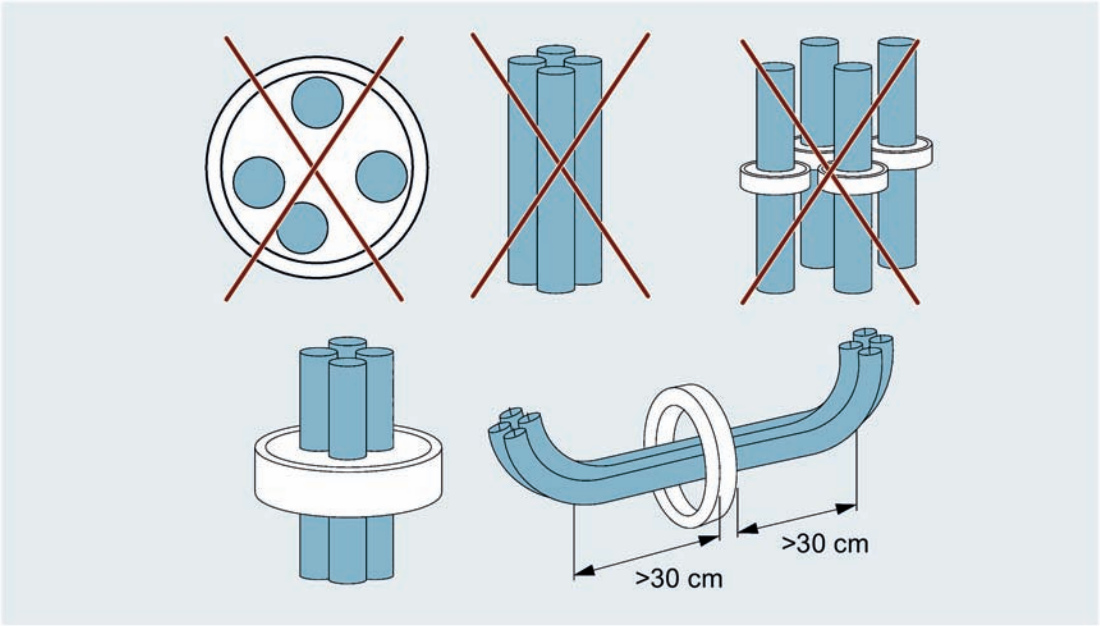

Note

With MRCD type A, the summation current transformer used for the application must have an inside diameter which is at least 1.5 times larger than the outside diameter of the conductors which pass through it. With MRCD type B, the inside diameter must be at least 2 times larger.

If the combination MRCD, summation current transformer, trip unit and molded case circuit breaker/switch disconnector is to be installed, the minimum clearances must be observed. For more information, refer to the operating instructions.

Combinations of molded case circuit breaker, MRCD and shunt trip/undervoltage release

Modular residual current devices, molded case circuit breakers, and shunt trips or undervoltage releases UVR can be combined as indicated in the tables below:

MRCD type A:

Molded case circuit breaker	Shunt trip	Voltage	
		V AC 50/60 Hz	V DC
3VA10 (16 … 100 A) 3VA11 (16 … 160 A) 3VA12 (160 … 250 A) 3VA20 (25 … 100 A) 3VA21 (25 … 160 A) 3VA22 (160 … 250 A) 3VA23 (250 … 400 A) 3VA24 (400 … 630 A)	3VA9988-0BL30	24	12 … 30
	3VA9988-0BL32	110 … 127	110 … 127
	3VA9988-0BL33	208 … 277	220 … 250

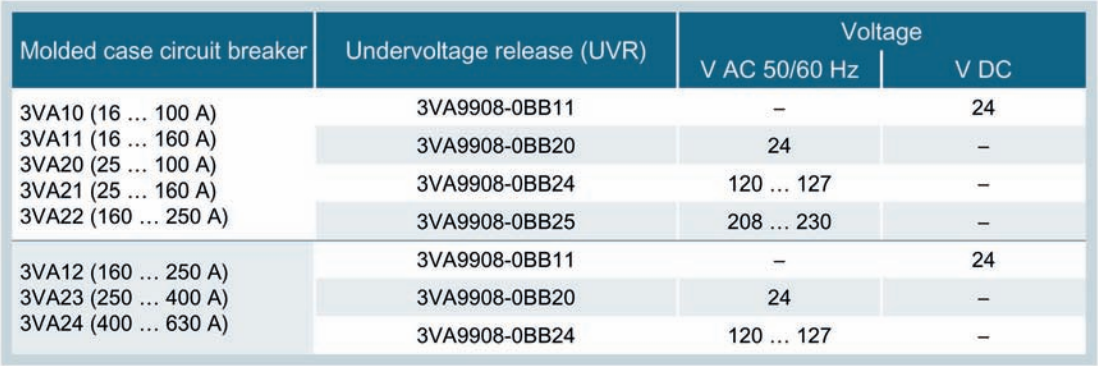

Molded case circuit breaker	Undervoltage release (UVR)	Voltage	
		V AC 50/60 Hz	V DC
3VA10 (16 … 100 A) 3VA11 (16 … 160 A) 3VA20 (25 … 100 A) 3VA21 (25 … 160 A) 3VA22 (160 … 250 A)	3VA9908-0BB11	–	24
	3VA9908-0BB20	24	–
	3VA9908-0BB24	120 … 127	–
	3VA9908-0BB25	208 … 230	–
3VA12 (160 … 250 A) 3VA23 (250 … 400 A) 3VA24 (400 … 630 A)	3VA9908-0BB11	–	24
	3VA9908-0BB20	24	–
	3VA9908-0BB24	120 … 127	–

MRCS type B:

Molded case circuit breaker	Shunt trip	Voltage	
		50/60 Hz V AC	V DC
3VA10 (16 … 100 A) 3VA11 (16 … 160 A) 3VA20 (25 … 100 A) 3VA21 (25 … 160 A) 3VA22 (160 … 250 A) 3VA23 (250 … 400 A) 3VA24 (400 … 630 A)	3VA9988-0BL30	24	12 … 30
	3VA9988-0BL32	110 … 127	110 … 127
	3VA9988-0BL33	208 … 277	220 … 250

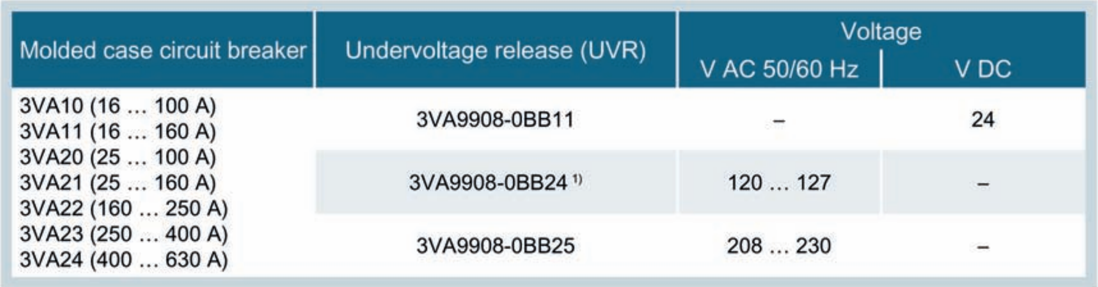

Molded case circuit breaker	Undervoltage release (UVR)	Voltage	
		V AC 50/60 Hz	V DC
3VA10 (16 … 100 A) 3VA11 (16 … 160 A) 3VA20 (25 … 100 A) 3VA21 (25 … 160 A) 3VA22 (160 … 250 A) 3VA23 (250 … 400 A) 3VA24 (400 … 630 A)	3VA9908-0BB11	–	24
	3VA9908-0BB24 [1]	120 … 127	–
	3VA9908-0BB25	208 … 230	–

[1] Cannot be combined with 3VA23 and 3VA24 molded case circuit breakers

4.9 Communication and system integration

4.9.1 System description

Communication-capable 3VA molded case circuit breakers are presented in this chapter. You will find out about the components that 3VA molded case circuit breakers require in order to communicate, how these components are interconnected and what properties they have.

The advantages of optimum integration of 3VA molded case circuit breakers into a software or communication system are as follows:

- Acquisition of breaker status
- Remote control
- Remote parameterization
- Monitoring of capacity utilization
- Acquisition of consumption and performance data
- Local signaling via the EFB300 external function box
- Local visualization of 3VA molded case circuit breakers

A 3VA molded case circuit breaker can utilize all these functions only if a COM060 communication module is installed in the 3VA breaker and connected to a COM800 breaker data server for up to eight 3VA molded case circuit breakers, or a COM100 breaker data server for one breaker.

You can find detailed information on the communication module and breaker data server and the communication link of the molded case circuit breaker in the 3VA Communication System Manual.

4.9.2 Communication system of the 3VA molded case circuit breaker

The following components combine with the 3VA molded case circuit breaker to create a communication system:

- Electronic trip unit (ETU)
- COM800 / COM100 breaker data server
- Optional expansion modules for three other communication networks
- COM060 communication module
- Draw-out unit with communication link
- Synchronizable motor operator SEO520
- EFB300 external function box (EFB)
- DSP800 display
- Commissioning and service software: powerconfig

The diagram below presents the components which render a 3VA molded case circuit breaker capable of communication.

Communication system architecture for 3VA

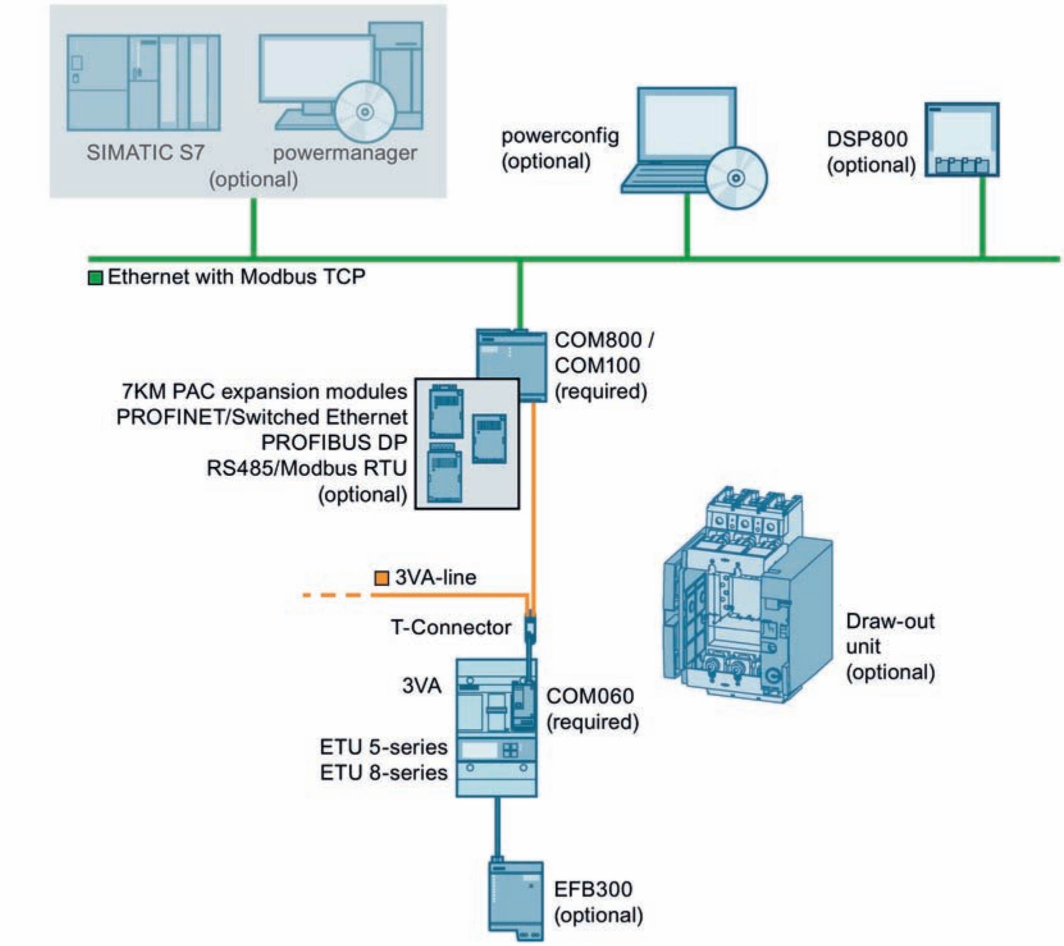

The central components of communication-capable 3VA molded case circuit breakers are the ETUs 5-series or 8-series.

You can find additional information in the 3VA Communication System Manual. There the components are regarded only as suppliers of information or receivers of commands. Typical communication partners are:

- SIMATIC S7
- powermanager

While reference is frequently made to these systems, they are not an integral part of the 3VA communication system.

4.9.3 COM800 / COM100 breaker data server

The COM800/COM100 breaker data servers can be used to integrate communication-capable 3VA molded case circuit breakers with ETUs 5-series and 8-series into communication networks of various types.

- The COM800 breaker data server supports a maximum of eight 3VA molded case circuit breakers
- The COM100 breaker data server supports one 3VA molded case circuit breaker

3VA molded case circuit breakers can be connected to higher-level communication networks by the following methods:

- Direct Ethernet connection to Modbus TCP
- 7KM PAC PROFIBUS DP expansion module to PROFIBUS DPV1 / V2
- 7KM PAC Switched Ethernet PROFINET expansion module to PROFINET IO and PROFIenergy, as well as Modbus TCP
- 7KM PAC RS 485 expansion module for Modbus RTU

3VA molded case circuit breakers are typically linked to the power monitoring software powermanager or the automation concept TIA (Totally Integrated Automation) via a communication network.

3VA molded case circuit breakers can also be connected to the commissioning and service software powerconfig.

The 3VA molded case circuit breakers can also be linked to many non-Siemens systems through such communication networks.

Furthermore, local visualization on the DSP800 display can be implemented with the COM800/COM100 breaker data server.

Example: Configuration of the COM800/COM100 breaker data server with a 3VA-line of three 3VA molded case circuit breakers and with connection to the power monitoring software powermanager (left), to the DSP800 (center) and to the commissioning and service software powerconfig (right).

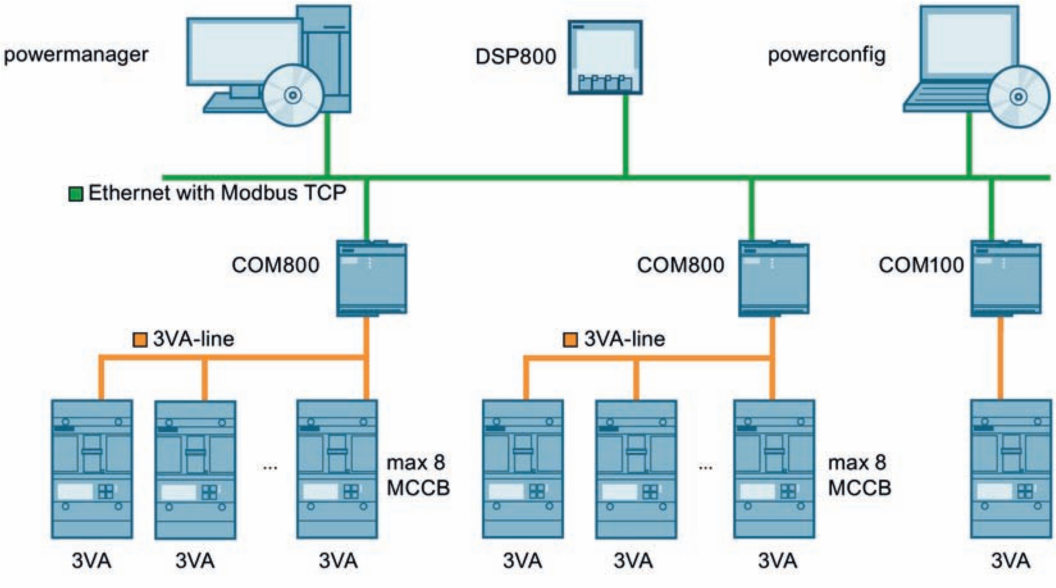

To establish a communication link, the COM800 or COM100 breaker data server is connected via the 3VA-line to the COM060 communication module of the relevant circuit breaker.

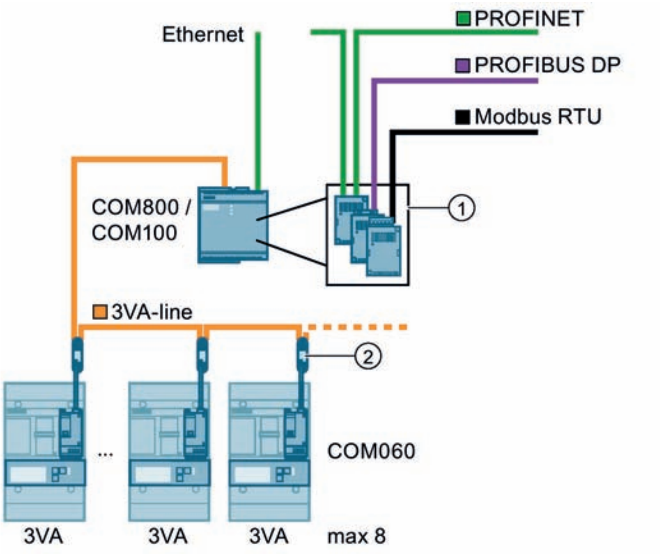

① PAC expansion modules
② T-connector

From a 24 V DC supply, the COM800/COM100 breaker data server supplies power to all the connected 3VA molded case circuit breakers and the following components:

- COM060 communication module
- ETUs 5-series and 8-series
- Position signaling switch for draw-out socket
- 7KM PAC PROFIBUS DP expansion module
- 7KM PAC Switched Ethernet PROFINET expansion module
- 7KM PAC RS 485 expansion module

4.9.3.1 Area of application

The COM800/COM100 breaker data server can be used to link 3VA molded case circuit breakers to:

- Power monitoring software powermanager
- Industrial automation systems
- Building automation systems
- Parameterization and breaker condition evaluation via communication link
- Maintenance systems
- MindSphere

4.9.3.2 Features

Working in conjunction with the connected 3VA molded case circuit breakers with ETUs 5-series and 8-series, the COM800/COM100 breaker data server supplies the following information about the power distribution system:

- Condition of the 3VA molded case circuit breaker
- Tripping history with time stamp, cause of trip and number of trip events for breakers with ETUs 5-series and 8-series
- Minimum and maximum values of measured variables
- Limit-value monitoring for measured variables in the 3VA molded case circuit breakers
- Load curves with power demands, e.g. 15-minute demands
- Energy values such as active energy (kWh) and reactive energy (kvarh)
- Power supply to connected 3VA molded case circuit breakers
- Three simultaneous communication connections via the integrated Ethernet interface (e.g. DSP800, powermanager and, temporarily, powerconfig)

4.9.4 Communication with ETUs

Electronic trip units allow detailed setting of protection parameters from a central location. They record measured variables and maintenance information in order to support power and installation monitoring.

The electronic trip units (ETUs) provide the following protection functions:

- Overload protection L ("L" = Long time)
- Short-time delayed short-circuit release S ("S" = Short time) for time-selective response in case of a short-circuit
- Instantaneous short-circuit release I ("I" = Instantaneous)
- Protection of the neutral conductor against overload and short-circuit ("N" = neutral)
- Protection against residual currents to ground G ("G" = Ground fault)

4.9.4.1 Area of application

Communication-capable ETUs are deployed for any application which requires the following functions:

- Diverse protection functions
- Finer setting options for protection functions
- Metering functions
- For 50 and 60 Hz networks (45 to 65 Hz)
- The communication option provides a wide range of information about the status of the molded case circuit breaker, as well as the actual measured values.

4.9.5 DSP800 display

The DSP800 display is designed for mounting in the panel door and can be optionally connected to the Ethernet (Modbus TCP) interface integrated in the COM800 / COM100 breaker data server. The DSP800 display shows the data of the breaker data server and thus the data of up to eight connected 3VA molded case circuit breakers.

The start page of the DSP800 displays the status and maximum current of all 3VAs. All the detailed information about individual molded case circuit breakers can be selected via the efficiently structured menu. This includes

- Measured values of ETU 5-series and 8-series
- ETU setting parameters
- Status
- Diagnostics

With firmware version 2.07, up to three 3WL10 / 3VA27 circuit breakers can also be shown on the DSP800 display. It must be noted that a maximum of 8 breakers can be displayed.

Templates for 1, 2, 4 and 8 breakers are available as default screens. These can either be selected and arranged automatically or they can be manually assigned. In addition, the measured values to be displayed can be selected in the overview.

4.9.6 Commissioning and testing of electronic trip units using powerconfig

powerconfig

powerconfig performs the following functions for 3VA molded case circuit breakers:

- Parameterization of 3VA ETUs and other 3VA components
- Testing of 3VA
- Commissioning of 3VA
- Statistical analysis of 3VA
- Readout of measured variables such as energy, current, voltage and power from 3VA molded case circuit breakers
- Readout of minimum and maximum values from 3VA molded case circuit breakers
- Diagnostics of 3VA

The PC on which powerconfig is installed is connected to the 3VA molded case circuit breaker by means of the COM800 / COM100 breaker data server (optionally with modules) or the TD500 test device.

The TD500 test device is required in order to perform function tests. You can find more detailed information on the TD500 test device in chapter TD500 test device (Page 513).

3VA molded case circuit breakers and, in some cases, other devices supported by powerconfig are combined in powerconfig to form a project if they are related to one another from a technical, organizational or some other perspective.

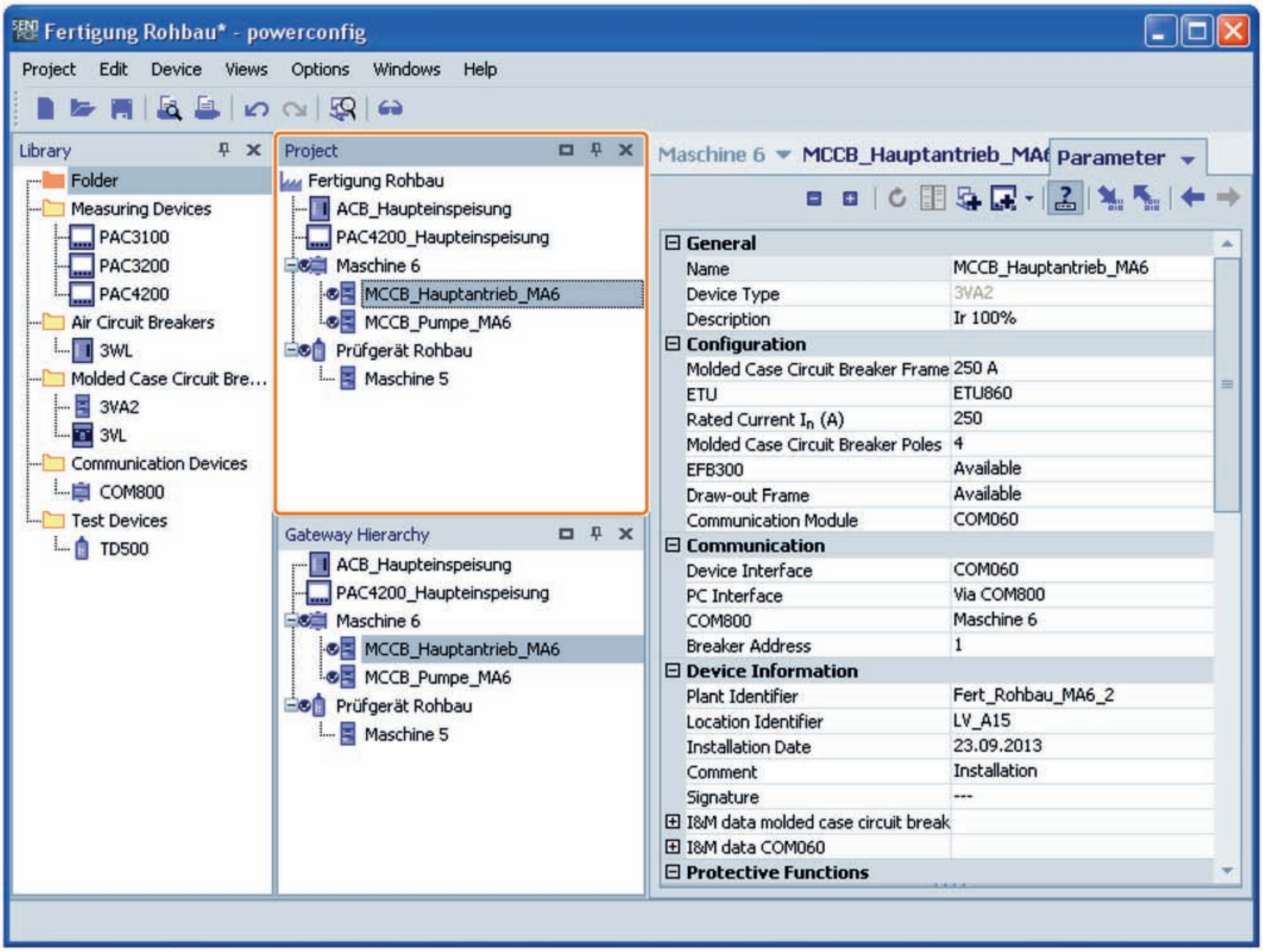

⊟ **General**	
Name	MCCB_Hauptantrieb_MA6
Device Type	3VA2
Description	Ir 100%
⊟ **Configuration**	
Molded Case Circuit Breaker Frame	250 A
ETU	ETU860
Rated Current I_n (A)	250
Molded Case Circuit Breaker Poles	4
EFB300	Available
Draw-out Frame	Available
Communication Module	COM060
⊟ **Communication**	
Device Interface	COM060
PC Interface	Via COM800
COM800	Maschine 6
Breaker Address	1
⊟ **Device Information**	
Plant Identifier	Fert_Rohbau_MA6_2
Location Identifier	LV_A15
Installation Date	23.09.2013
Comment	Installation
Signature	---
⊞ I&M data molded case circuit break	
⊞ I&M data COM060	
⊟ **Protective Functions**	

Electronic trip units (ETU), the EFB300 external function box and the communication structure can be commissioned easily by means of the powerconfig software. On completion of the commissioning process, the ETU settings can be stored as a project on the PC and printed out.

powerconfig can also be used to perform ETU trip tests. A test report is generated automatically and stored in the project every time a test is carried out.

powerconfig supports a variety of different device communication links depending on the SENTRON device used:

- USB
- Ethernet (Modbus TCP)
- PROFINET
- PROFIBUS
- MODBUS RTU

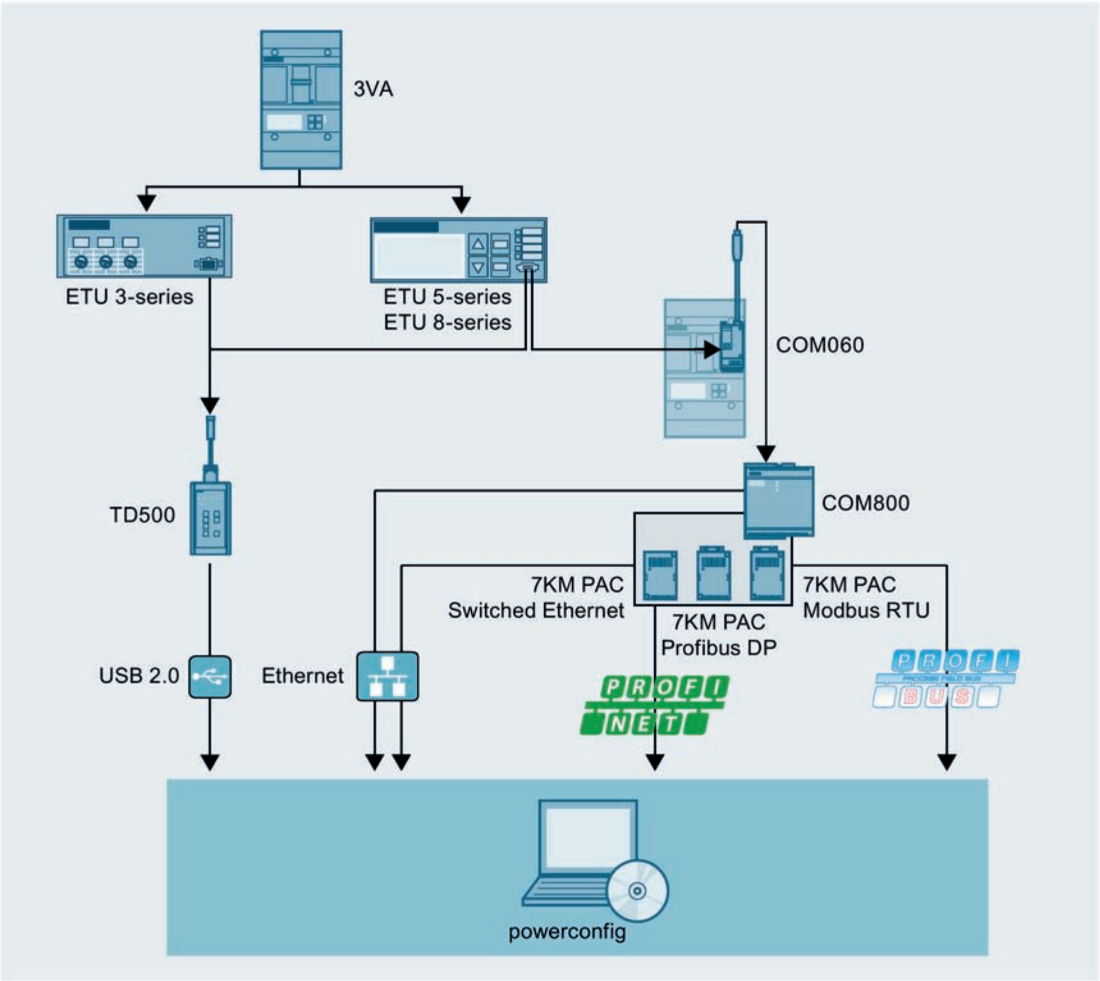

The possible means of connection of the COM800 / COM100 breaker data server are described in detail in the 3VA Communication system manual (see Reference documents (Page 10)).

With 3VA molded case circuit breakers and 3-series ETUs, powerconfig is linked to the ETU interface via the USB interface on the PC and the interface on the TD500 test device.

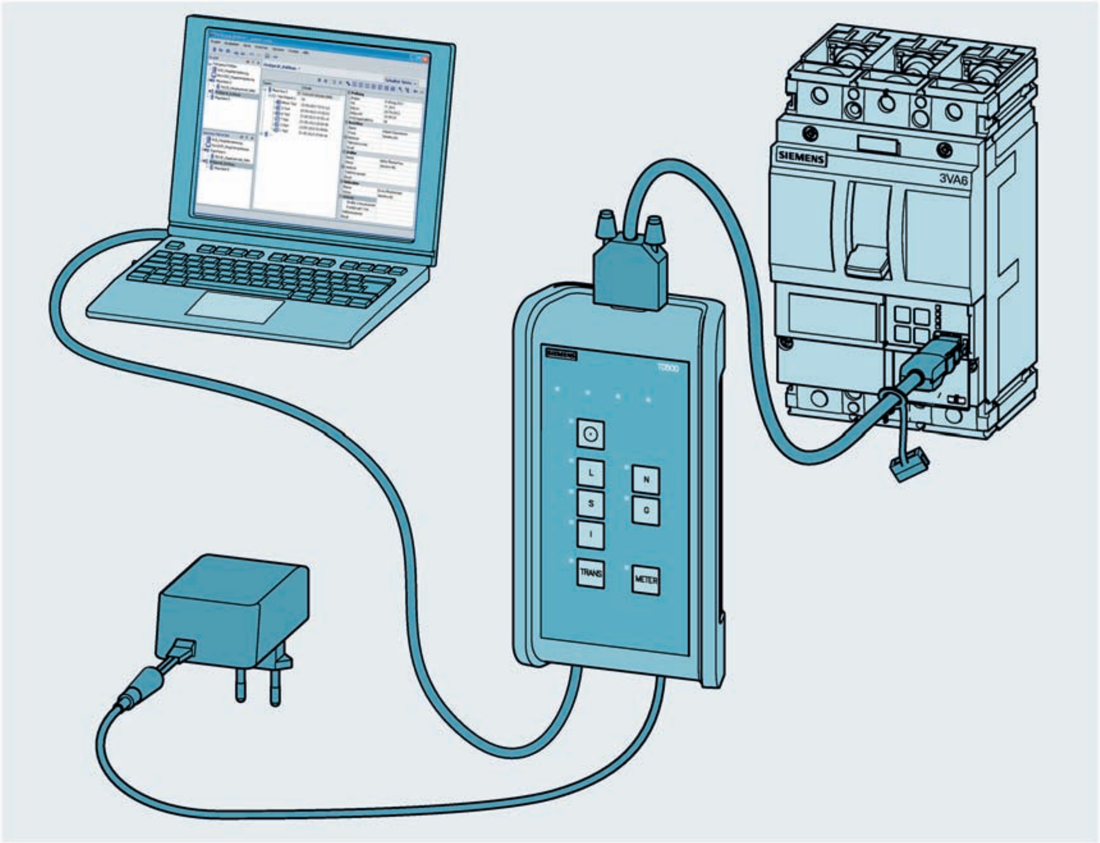

4.9.7 Power management with powermanager

For power and plant monitoring, Siemens offers the powermanager software. Together with SENTRON protection devices such as 3VA, 3WL and PAC measuring devices as well as non-Siemens devices, powermanager provides a power monitoring system for reducing energy costs and increasing energy availability.

powermanager acquires the measured variables that are needed to optimize power consumption and so reduce costs. These variables not only include energy and power values, but also electrical parameters such as current, voltage, or power factor. Not only is this system able to display values, but also to monitor and archive them for later analysis. In addition, the load monitoring function is capable of monitoring a specified setpoint and making recommendations as to which loads should be connected and disconnected.

Identifying savings potential

The power monitoring software has been tested by the TÜV Rheinland for its suitability to support an energy management system in accordance with ISO 50001.

Functionality and user-friendliness

The salient features and functions of the power monitoring software are as follows:

- Good scalability
- Enhanced report templates
- Response plans
- Mass parameterization
- Virtual measuring points for computing customer-specific parameters
- Load monitoring function for monitoring specified power limits for freely definable time periods
- Switching recommendations in the event of limit violations
- Remote control of circuit breakers

4.10 EFB300 external function box

4.10.1 General information

3VA molded case circuit breakers equipped with the electronic trip unit systems ETU 3-series, ETU 5-series and ETU 8-series can be optionally upgraded with an EFB300 external function box.

The EFB300 external function box receives information from the ETU via a cable connection. This information can be used to output active trip alarms and tripping reasons (configurable using powerconfig) via four digital outputs.

Zone selective interlocking ZSI (see chapter Zone selective interlocking (ZSI) (Page 82)) can also be implemented via the EFB300. The EFB300 also supplies the ETU with power which means that the ETU can be parameterized via the display even when a 3VA molded case circuit breaker is in the de-energized state.

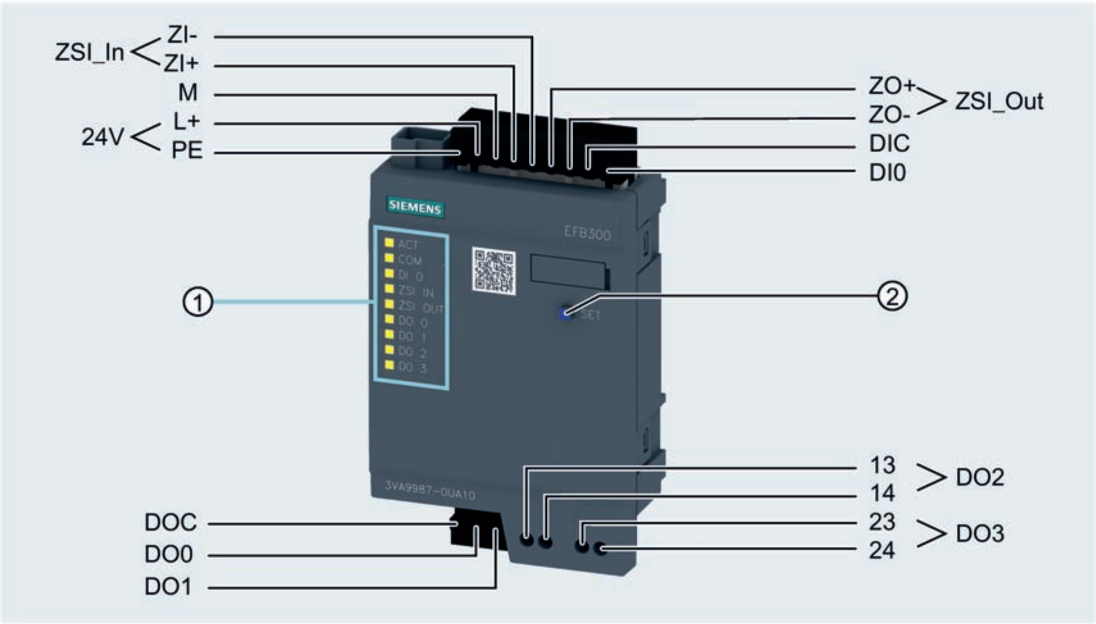

①	LED display
②	<SET> button
ZSI	Zone selective interlocking
DI	Digital input
DO 0 … 3	Digital output

4.10.2 Power supply

The EFB300 external function box must be operated on a 24 V DC power supply unit. It acts as a power supply for the connected ETU. This allows the ETU to remain operational even when a 3VA molded case circuit breaker has tripped.

4.10.3 Functions of the digital input and digital outputs

Functions of the digital input

Two different functions can be implemented using the digital input:

- Tripped signals in the ETU can be reset (this also removes the reason for the tripped signal from the ETU display and the default screen is displayed again).
- Information from a digital input can be made available via the communication interface of the COM800/COM100 breaker data server, e.g. the status of a door contact transmitter.

Functions of the digital outputs

With the powerconfig software application, it is possible to selectively assign signals transmitted by the connected ETU to the four digital outputs of the EFB300. powerconfig can be accessed via the TD500 test device or by means of the COM800 or COM100 breaker data server through the interface to the communication system.

The following signals (dependent on the ETU) can be assigned:

- **All the trip causes of the ETU**
  - Overload L
  - Overload L in the neutral conductor
  - Short-time delayed short circuit S
  - Instantaneous short circuit I
  - Ground-fault protection G
  - Overtemperature
  - Blocking protection (with motor protection)
  - Idle running protection (with motor protection)
  - Phase failure protection (with motor protection)
  - RCD trip
  - Group signal for trip due to short circuit (i.e. S or I)
    This makes it possible to differentiate between overload and short circuit. This is an important criterion for the question "May I reconnect?".
  - Group alarm for trip by ETU

- **Warnings**
  - Alarm level AL1 (90% I_r)
  - Alarm level AL2 (105% I_r)
  - Temperature alarm
  - Load shedding or load pick up
    By means of the load shedding and load pick up signals, a load can be switched off or connected automatically depending on the capacity utilization of the 3VA molded case circuit breaker.
  - Ground-fault alarm
  - Internal ETU fault
  - Group signal for all warnings
  - Pre-trip for overload
    This warning appears 200 ms before an overload trip. This allows the user to bring frequency converters into a safe state, for example.
- **Remote control**
  - The four digital outputs can be controlled directly from the fieldbus/Ethernet.

    Possible application: Control of an MO320 motor operator without communication capability
- **Limit values (4)**
  - The 8-series ETUs offer a total of four limit value settings. Almost all measured values are available for monitoring. These can be assigned a hysteresis and an additional time delay. In the event of upward or downward violation of the set measured value, a limit value violation is generated which can be output via the EFB300 outputs and also transmitted via the communication system.
    One possible example is to signal the measured frequency in a combined heat and power plant.
- **Energy pulse** (with ETU 8-series only)
  An energy pulse (S0 signal pulse) contains information pertaining to the consumption of a specific quantity of energy. The data are transmitted by weighted pulses, i.e. a specific number of pulses are transferred to represent one kWh unit.
  Settings for the energy pulse, see table on next page.

Example of energy pulse:

Energy meter source:	Active energy kWh
Pulses per unit:	5
Unit:	20 kWh
Pulse length:	30 ms
Output of 140 kWh:	Output of 35 pulses, each 30 ms in length

Overview of functions available with EFB300 external function box

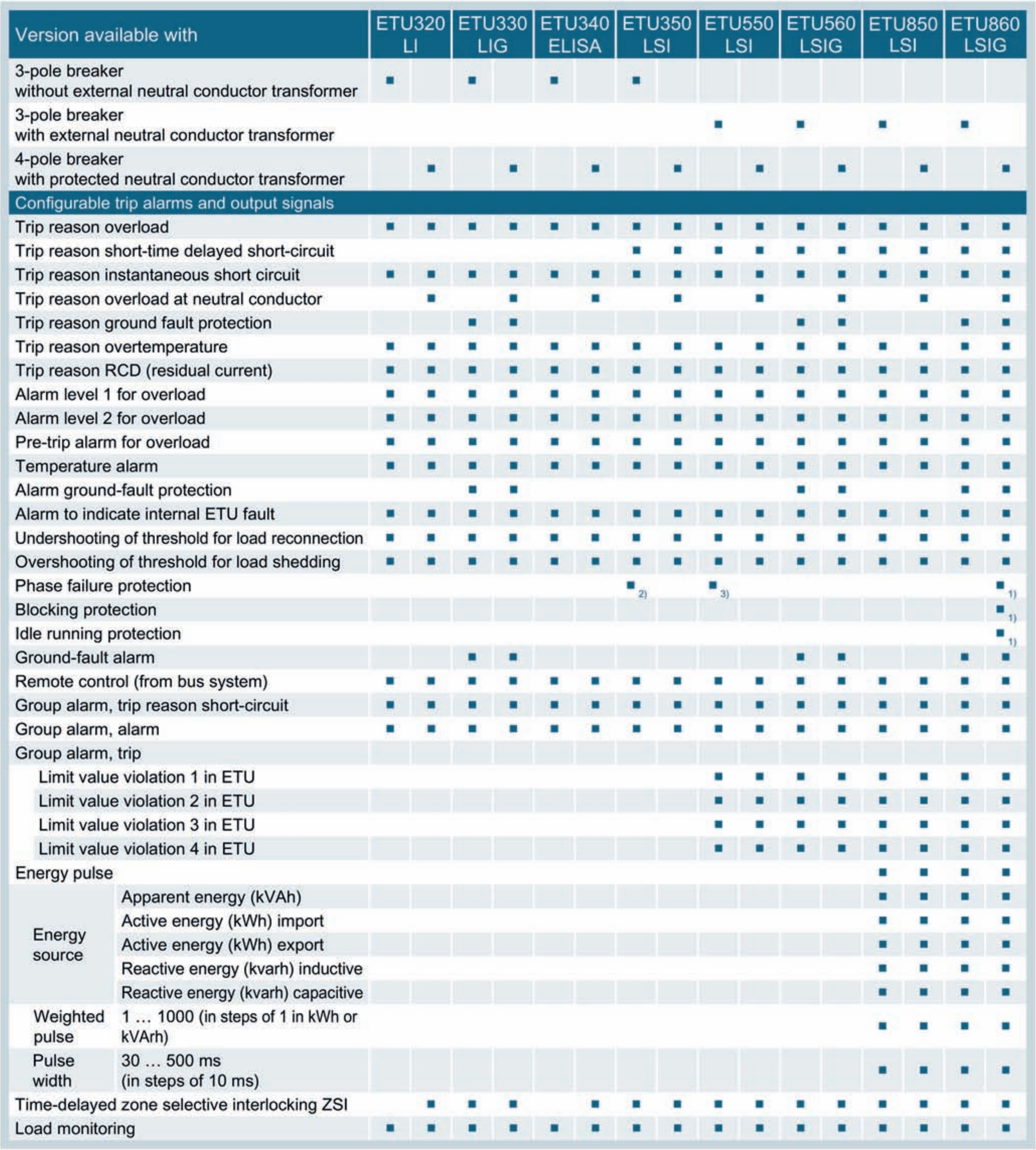

Version available with		ETU320 LI		ETU330 LIG		ETU340 ELISA		ETU350 LSI		ETU550 LSI		ETU560 LSIG		ETU850 LSI		ETU860 LSIG	
3-pole breaker without external neutral conductor transformer		■		■		■		■									
3-pole breaker with external neutral conductor transformer										■		■		■		■	
4-pole breaker with protected neutral conductor transformer			■		■		■		■		■		■		■		■
Configurable trip alarms and output signals																	
Trip reason overload		■	■	■	■	■	■	■	■	■	■	■	■	■	■	■	■
Trip reason short-time delayed short-circuit								■	■	■	■	■	■	■	■	■	■
Trip reason instantaneous short circuit		■	■	■	■	■	■	■	■	■	■	■	■	■	■	■	■
Trip reason overload at neutral conductor			■		■		■		■		■		■		■		■
Trip reason ground fault protection				■	■							■	■			■	■
Trip reason overtemperature		■	■	■	■	■	■	■	■	■	■	■	■	■	■	■	■
Trip reason RCD (residual current)		■	■	■	■	■	■	■	■	■	■	■	■	■	■	■	■
Alarm level 1 for overload		■	■	■	■	■	■	■	■	■	■	■	■	■	■	■	■
Alarm level 2 for overload		■	■	■	■	■	■	■	■	■	■	■	■	■	■	■	■
Pre-trip alarm for overload		■	■	■	■	■	■	■	■	■	■	■	■	■	■	■	■
Temperature alarm		■	■	■	■	■	■	■	■	■	■	■	■	■	■	■	■
Alarm ground-fault protection				■	■							■	■			■	■
Alarm to indicate internal ETU fault		■	■	■	■	■	■	■	■	■	■	■	■	■	■	■	■
Undershooting of threshold for load reconnection		■	■	■	■	■	■	■	■	■	■	■	■	■	■	■	■
Overshooting of threshold for load shedding		■	■	■	■	■	■	■	■	■	■	■	■	■	■	■	■
Phase failure protection								■ 2)		■ 3)							■ 1)
Blocking protection																	■ 1)
Idle running protection																	■ 1)
Ground-fault alarm				■	■							■	■			■	■
Remote control (from bus system)		■	■	■	■	■	■	■	■	■	■	■	■	■	■	■	■
Group alarm, trip reason short-circuit		■	■	■	■	■	■	■	■	■	■	■	■	■	■	■	■
Group alarm, alarm		■	■	■	■	■	■	■	■	■	■	■	■	■	■	■	■
Group alarm, trip																	
	Limit value violation 1 in ETU									■	■	■	■	■	■	■	■
	Limit value violation 2 in ETU									■	■	■	■	■	■	■	■
	Limit value violation 3 in ETU									■	■	■	■	■	■	■	■
	Limit value violation 4 in ETU									■	■	■	■	■	■	■	■
Energy pulse														■	■	■	■
Energy source	Apparent energy (kVAh)													■	■	■	■
	Active energy (kWh) import													■	■	■	■
	Active energy (kWh) export													■	■	■	■
	Reactive energy (kvarh) inductive													■	■	■	■
	Reactive energy (kvarh) capacitive													■	■	■	■
Weighted pulse	1 … 1000 (in steps of 1 in kWh or kVArh)													■	■	■	■
Pulse width	30 … 500 ms (in steps of 10 ms)													■	■	■	■
Time-delayed zone selective interlocking ZSI			■	■	■		■	■	■	■	■	■	■	■	■	■	■
Load monitoring		■	■	■	■	■	■	■	■	■	■	■	■	■	■	■	■

[1] ETU860M (starter protection and motor protection)

[2] ETU350M (motor protection)

[3] ETU550M (motor protection)

Default output assignments

The four outputs of the EFB300 are automatically assigned factory defaults in ETUs with firmware version 4.2 and higher.

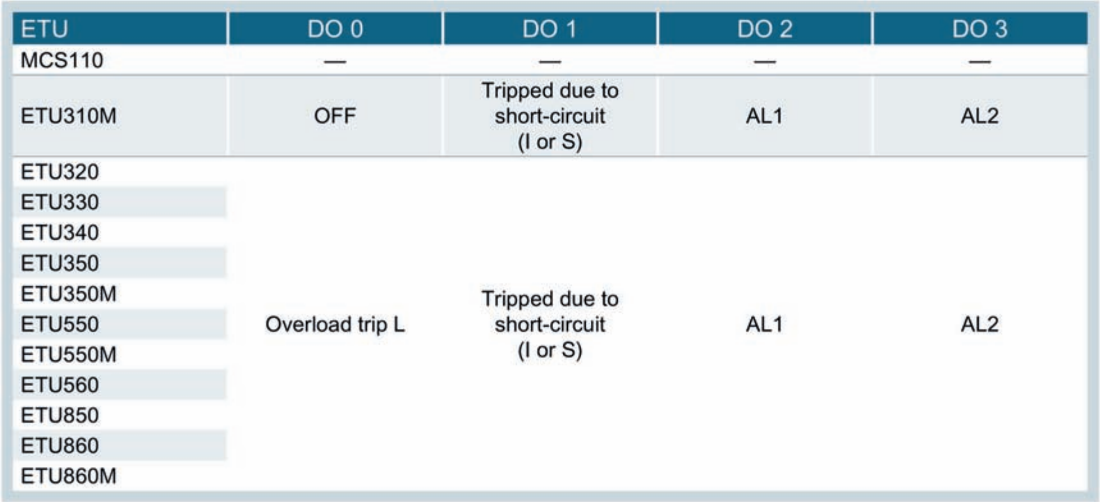

ETU	DO 0	DO 1	DO 2	DO 3
MCS110	—	—	—	—
ETU310M	OFF	Tripped due to short-circuit (I or S)	AL1	AL2
ETU320	Overload trip L	Tripped due to short-circuit (I or S)	AL1	AL2
ETU330				
ETU340				
ETU350				
ETU350M				
ETU550				
ETU550M				
ETU560				
ETU850				
ETU860				
ETU860M				

4.10.4 Zone selective interlocking (ZSI)

Description

Microprocessor-controlled, zone selective interlocking (ZSI) has been developed in order to control the total breaking time in low-voltage networks with multiple molded case circuit breakers connected in series.

Advantage of ZSI:

Regardless of the number of series-connected molded case circuit breakers, all short circuits in the network can be cleared within a maximum time period of 50 ms. Short-circuit clearance times should be minimized, particularly in the case of system short circuits of very large magnitude.

Note

Backward compatibility

The ZSI function is backward-compatible with the ZSI function of the 3WL molded case circuit breakers.

Connection

Use of the ZSI function is conditional upon the connection of a dedicated EFB300 external function box to each 3VA2 molded case circuit breaker. The EFB300 allows molded case circuit breakers to communicate with one another, a capability which is a basic requirement for the ZSI function.

To permit utilization of the ZSI function, EFB300 external function boxes must be interconnected as illustrated below:

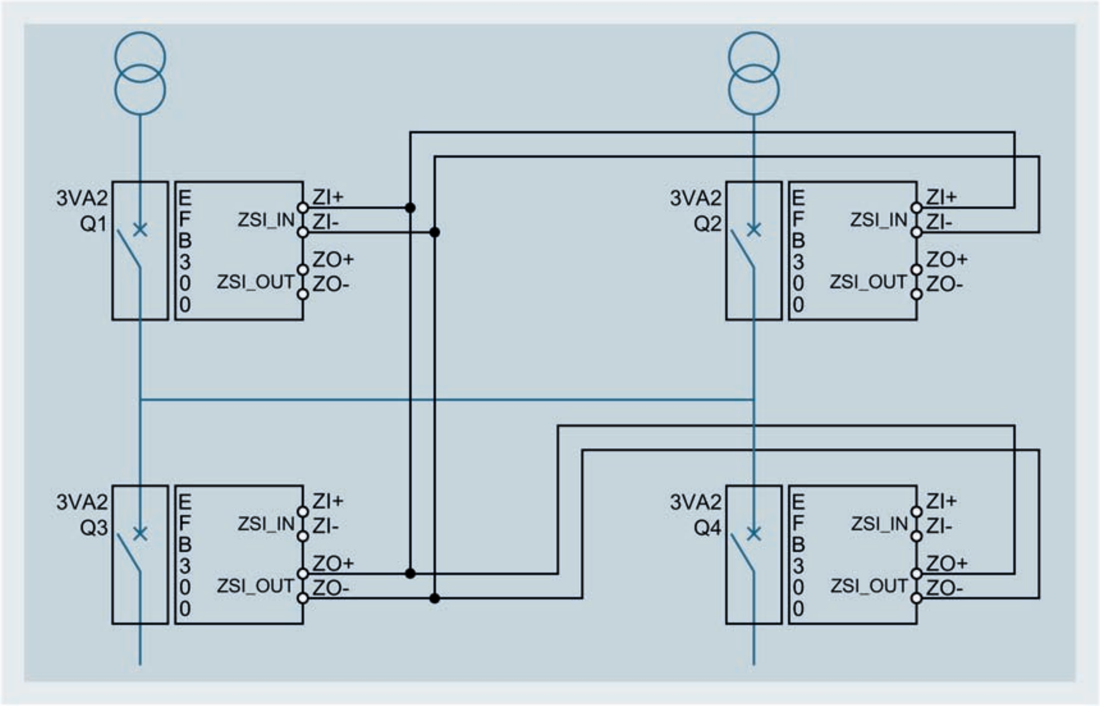

See also

Zone selective interlocking (ZSI) (Page 82)

4.10.5 <SET> button

The <SET> button performs the following functions depending on mode:

- Operating mode: Acknowledgment of signals
- Test mode: Execution of a test function

Operating mode

The EFB300 external function box is in operating mode during operation. Operation of the EFB300 is indicated by steady illumination of the LED labeled "ACT".

If a tripped signal is present at an output (output is activated), the user can acknowledge the signal or reset the output. This can be done by various methods:

- By application of a signal to the digital input of the EFB300
- By brief actuation of the <SET> button on the EFB300
- By actuation of the <ESC> button on the ETU

LED states in operating mode

LED		Meaning	Description
☐	ACT	Off	EFB300 not active
🟩	ACT	On	EFB300 ready
☐	COM	Off	No communication link with ETU
▨	COM	Flashing (2 Hz)	Establishing communication link with ETU
🟩	COM	On	Communication link with ETU established
☐	DI 0	Off	Input not activated
🟩	DI 0	On	Input activated
☐	ZSI IN	Off	ZSI function not activated
🟩	ZSI IN	On	ZSI function activated
☐	ZSI OUT	Off	No ZSI Out signal transmitted
🟩	ZSI OUT	On	ZSI Out signal transmitted
☐	DO 0	Off	No valid reason for trip signal
🟩	DO 0	On	Active trip signal
☐	DO 1	Off	No valid reason for trip signal
🟩	DO 1	On	Active trip signal
☐	DO 2	Off	No valid reason for trip signal
🟩	DO 2	On	Active trip signal
☐	DO 3	Off	No valid reason for trip signal
🟩	DO 3	On	Active trip signal

🟩 Steady illumination
▨ Flashing
☐ Off

Simultaneous flashing of all LEDs indicates that the EFB300 is defective.

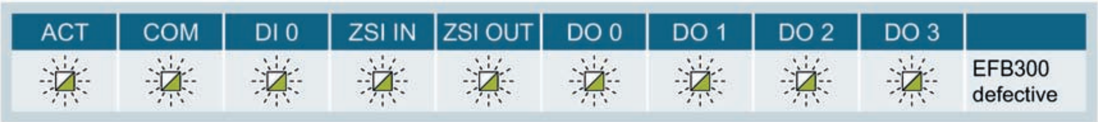

ACT	COM	DI 0	ZSI IN	ZSI OUT	DO 0	DO 1	DO 2	DO 3	
▨	▨	▨	▨	▨	▨	▨	▨	▨	EFB300 defective

▨ Flashing

Test mode

All inputs and outputs can be activated or deactivated manually in test mode. This can be done to determine whether the digital outputs and the ZSI bus are functioning properly and wired correctly.

The LED labeled "ACT" flashes to indicate that test mode is active. The powerconfig software can also be used to test outputs.

Activating test mode and performing tests

1. In order to activate test mode, press the <SET> button for at least 2 seconds ① until all the LEDs for the outputs light up briefly ②. Test mode is activated when the LED labeled "ACT" starts to flash ③.

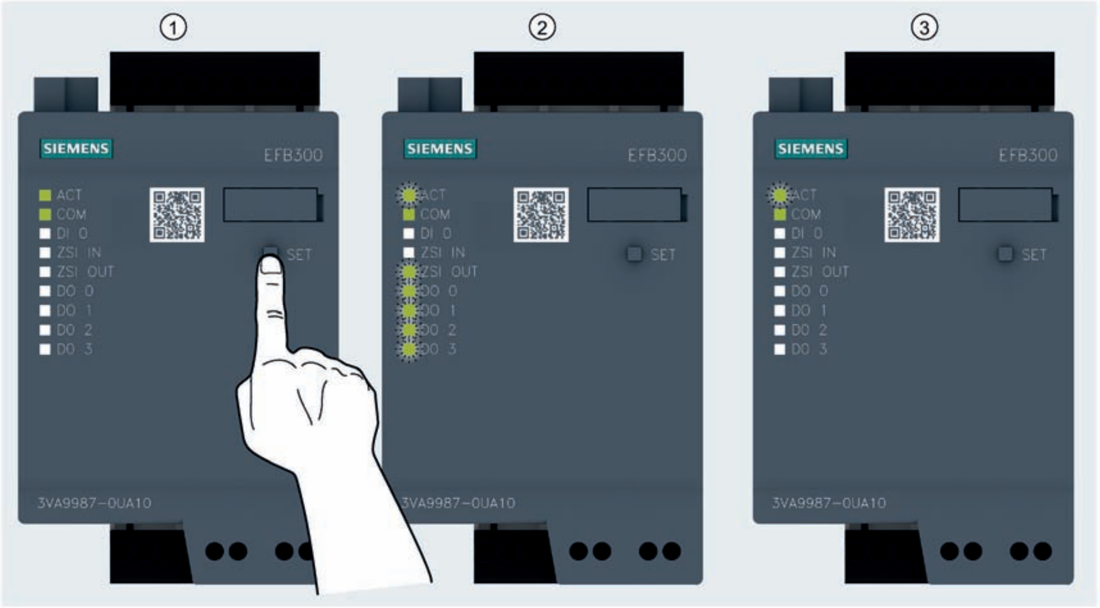

2. Press the <SET> button briefly.
   LED "ZSI_OUT" flashes, the ZSI output is selected.

3. In order to activate the selected output, press the <SET> button for longer than 2 seconds.
   The LED of the selected output changes from flashing to steady illumination to indicate activation of the selected output.

4. In order to deactivate the output again, press the <SET> button again for longer than 2 seconds.
   The LED of the activated output will change from steady illumination to flashing. The output is deactivated, but still selected.

5. In order to select the next output, press the <SET> button briefly ①.
   The LED of the next output starts to flash ②, the output is selected.

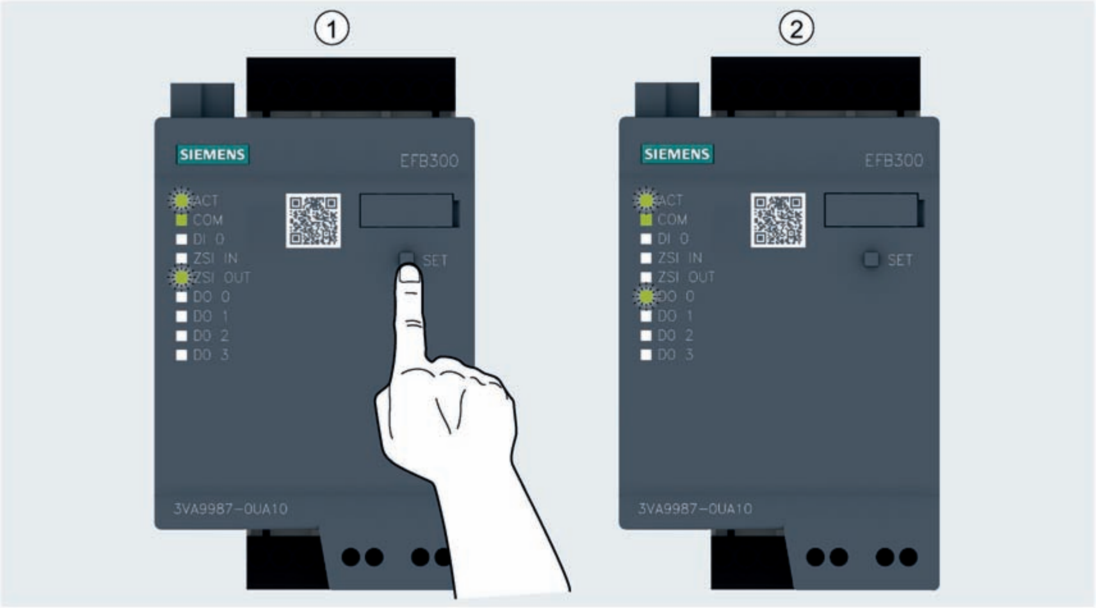

6. Repeat steps 3 to 5 in order to check the wiring of all digital outputs in succession.

Terminating test mode

If the <SET> button is not pressed for a period of three minutes after selection of an output, test mode is terminated automatically and the EFB300 reverts to operating mode.

Alternative method: After working through the entire menu structure (only the LED labeled "ACT" flashes), press the <SET> button for longer than 2 seconds.

LED states in test mode

LED		Meaning	Description
☐	ACT	Off	EFB300 not active
◩	ACT	Flashing (2 Hz)	Test mode active
☐	COM	Off	No communication link with ETU
◩	COM	Flashing (2 Hz)	Establishing communication link with ETU
🟩	COM	On	Communication link with ETU established
☐	DI 0	Off	Input not activated
🟩	DI 0	On	Input activated
☐	ZSI IN	Off	ZSI function not activated
🟩	ZSI IN	On	ZSI function activated
☐	ZSI OUT	Off	No ZSI Out signal transmitted
🟩	ZSI OUT	On	ZSI Out signal transmitted
☐	DO 0	Off	Output not selected
◩	DO 0	Flashing (2 Hz)	Output selected
🟩	DO 0	On	Output selected and activated
☐	DO 1	Off	Output not selected
◩	DO 1	Flashing (2 Hz)	Output selected
🟩	DO 1	On	Output selected and activated
☐	DO 2	Off	Output not selected
◩	DO 2	Flashing (2 Hz)	Output selected
🟩	DO 2	On	Output selected and activated
☐	DO 3	Off	Output not selected
◩	DO 3	Flashing (2 Hz)	Output selected
🟩	DO 3	On	Output selected and activated

🟩	Steady illumination
◩	Flashing
☐	Off

4.10.6 Technical specifications

Dimensions and weights		
Suitability for application		Installation in fixed switchboard inside enclosed rooms
Type of mounting		
DIN rail (35 mm)		Yes
Flat mounting		Yes
Mounting position		Vertical
Width	mm	70
Height	mm	115
Depth	mm	34
Weight (net)	g	145
Functions		
ETU power supply		Yes
Data exchange with ETU		Yes
Digital input and output module		Yes
Supply		
Rated power dissipation P_v	VA	4
Rated control supply voltage U_c	V DC	24
Operating range	x U_c	± 20 %
Power consumption	A	$\leq$ 0.16
Communication with molded case circuit breakers		
Number of 3VA-line interfaces		1
Length of cable	m	1.5
ZSI		
Number of breakers which can be connected to ZSI IN		$\leq$ 20
Number of breakers which can be connected to ZSI OUT		$\leq$ 8
Cable for ZSI		Flexible, shielded (min. 85 % coverage), twisted cable, max. capacitance: 200 nF/km (cable/shield), 160 nF/km (cable/cable), inductance 0.65 H/km, total cable resistance: max. 28 ohms
Cable length for ZSI		< 600 m / 0.75 mm^2 (AWG 18) < 1200 m / 1.5 mm^2 (AWG 16) < 2000 m / 2.5 mm^2 (AWG 14)

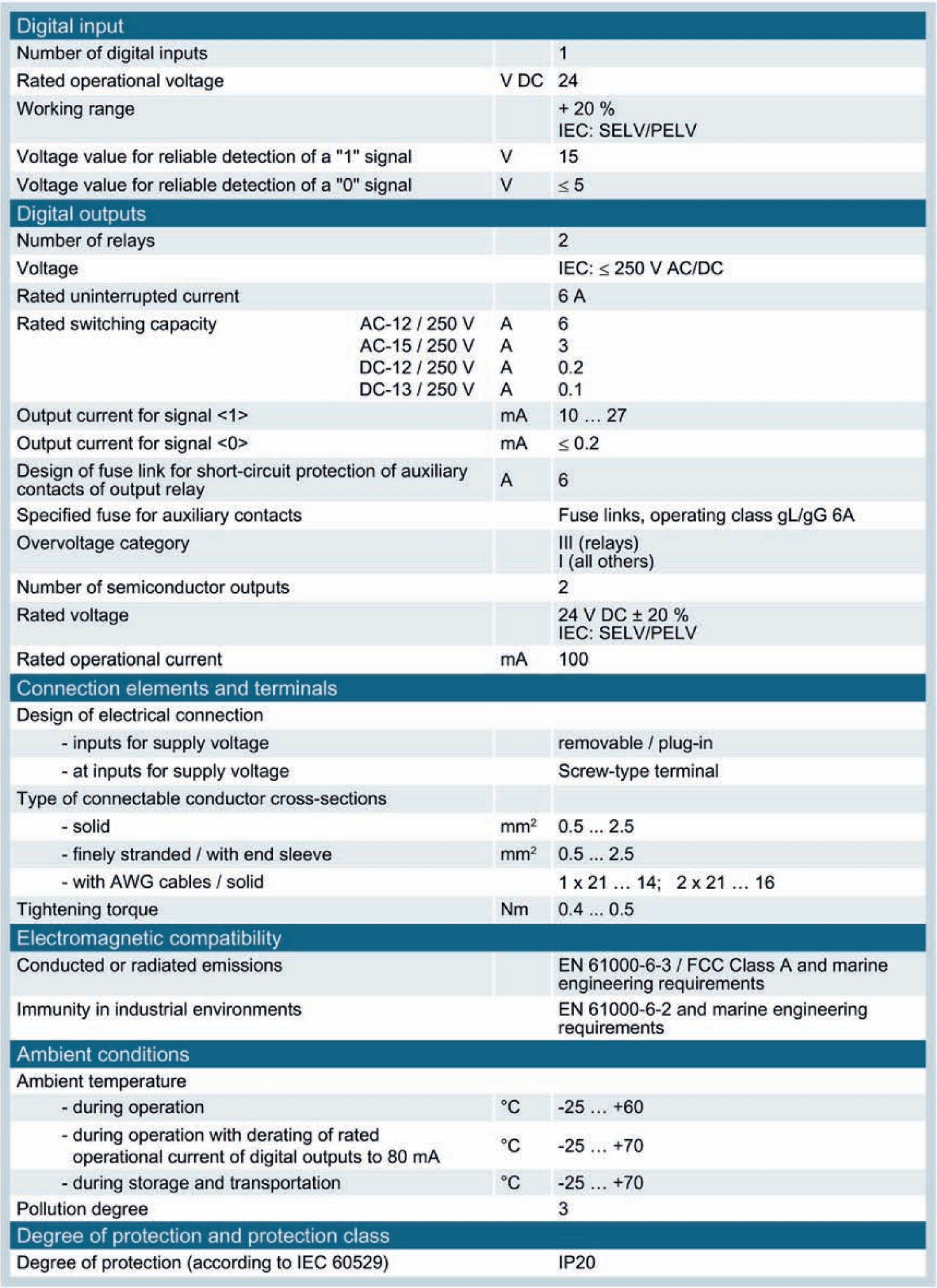

Digital input			
Number of digital inputs			1
Rated operational voltage		V DC	24
Working range			+ 20 % IEC: SELV/PELV
Voltage value for reliable detection of a "1" signal		V	15
Voltage value for reliable detection of a "0" signal		V	≤ 5
Digital outputs			
Number of relays			2
Voltage			IEC: ≤ 250 V AC/DC
Rated uninterrupted current			6 A
Rated switching capacity	AC-12 / 250 V	A	6
	AC-15 / 250 V	A	3
	DC-12 / 250 V	A	0.2
	DC-13 / 250 V	A	0.1
Output current for signal <1>		mA	10 … 27
Output current for signal <0>		mA	≤ 0.2
Design of fuse link for short-circuit protection of auxiliary contacts of output relay		A	6
Specified fuse for auxiliary contacts			Fuse links, operating class gL/gG 6A
Overvoltage category			III (relays) I (all others)
Number of semiconductor outputs			2
Rated voltage			24 V DC ± 20 % IEC: SELV/PELV
Rated operational current		mA	100
Connection elements and terminals			
Design of electrical connection			
- inputs for supply voltage			removable / plug-in
- at inputs for supply voltage			Screw-type terminal
Type of connectable conductor cross-sections			
- solid		mm²	0.5 ... 2.5
- finely stranded / with end sleeve		mm²	0.5 ... 2.5
- with AWG cables / solid			1 x 21 … 14; 2 x 21 … 16
Tightening torque		Nm	0.4 ... 0.5
Electromagnetic compatibility			
Conducted or radiated emissions			EN 61000-6-3 / FCC Class A and marine engineering requirements
Immunity in industrial environments			EN 61000-6-2 and marine engineering requirements
Ambient conditions			
Ambient temperature			
- during operation		°C	-25 … +60
- during operation with derating of rated operational current of digital outputs to 80 mA		°C	-25 … +70
- during storage and transportation		°C	-25 … +70
Pollution degree			3
Degree of protection and protection class			
Degree of protection (according to IEC 60529)			IP20

4.11 Test devices

Test devices are required in order to perform local tests on 3VA2 molded case circuit breakers equipped with electronic trip units (ETUs).

Two versions of the test devices are available:

- TD300 activation and trip box
- TD500 test device

Functional scope of test devices

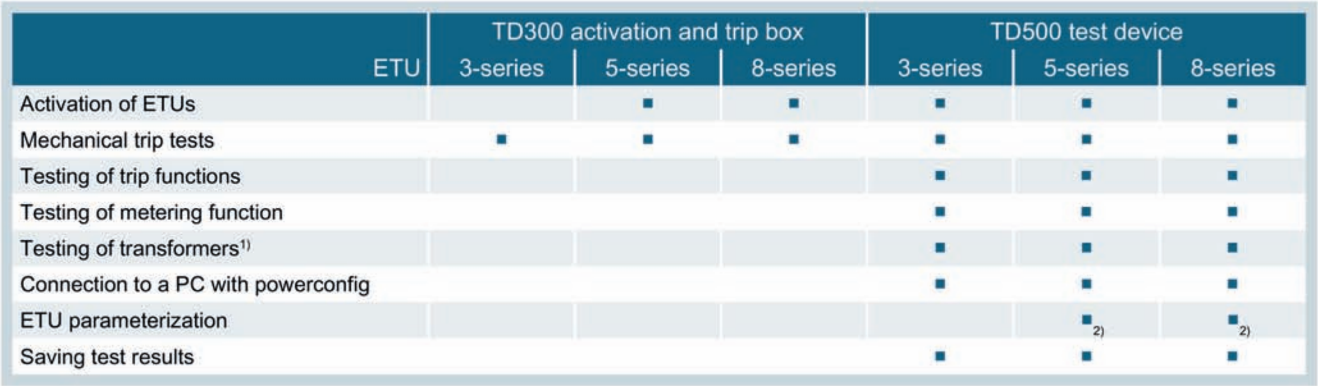

	TD300 activation and trip box			TD500 test device		
ETU	3-series	5-series	8-series	3-series	5-series	8-series
Activation of ETUs		■	■	■	■	■
Mechanical trip tests	■	■	■	■	■	■
Testing of trip functions				■	■	■
Testing of metering function				■	■	■
Testing of transformers1)				■	■	■
Connection to a PC with powerconfig				■	■	■
ETU parameterization					■2)	■2)
Saving test results				■	■	■

1) One energy transformer, one Rogowski coil

2) Via powerconfig

4.11.1 TD300 activation and trip box

The TD300 activation and trip box is a mobile, battery-operated local test device. Its purpose is:

- To supply the ETU with power so that the ETU can be parameterized when the molded case circuit breaker is switched off and de-energized.
- To test and service the electronic trip unit (ETU).

The power supply is provided by two AA batteries included in the scope of supply.

The TD300 activation and trip box is designed for ease of handling with dimensions of 76 x 107 x 25 mm (W x H x D).

Description of the TD300 activation and trip box

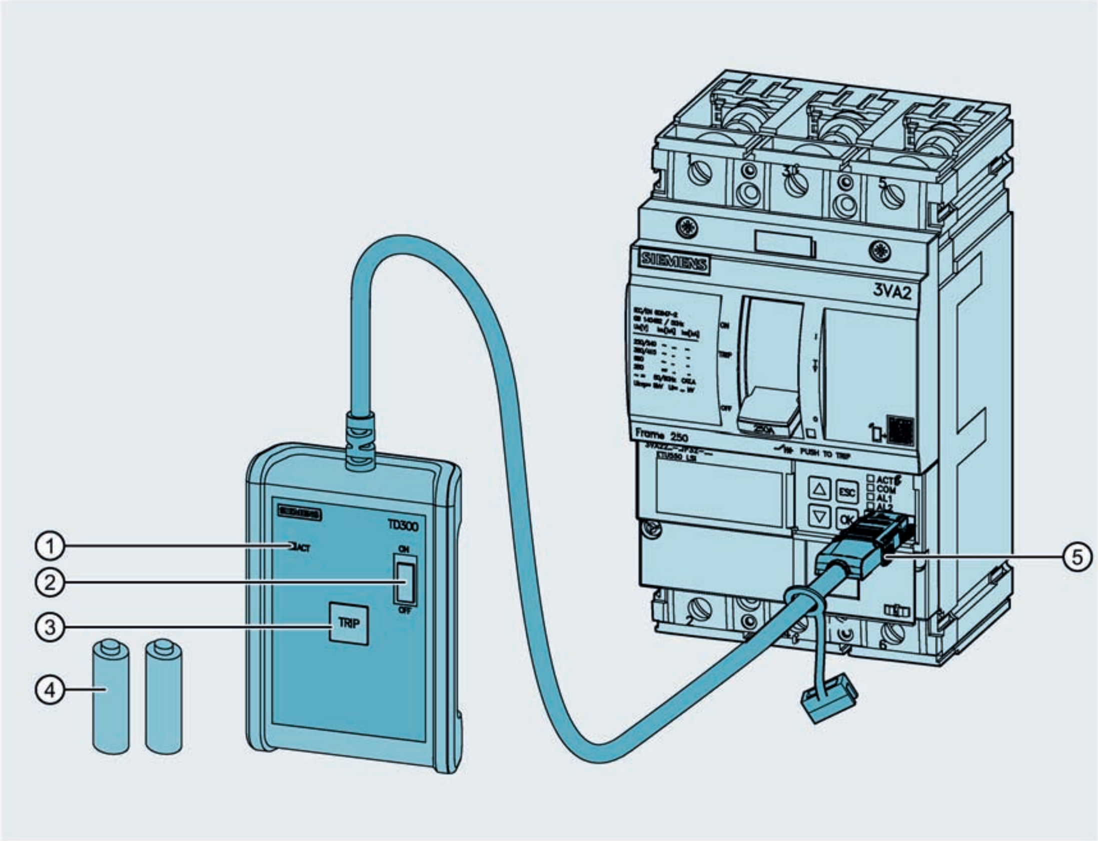

① LED "ACT" for indicating the battery status

② Slide switch ON/OFF

③ <TRIP> pushbutton for testing the molded case circuit breaker

④ 2 1.5 V AA batteries

⑤ Plug-in connector for insertion in the test socket on the ETU

4.11.1.1 Operation and execution of the TD300 tripping function

CAUTION

Personal injury, spurious tripping and irreparable damage to the TD300 activation and trip box

Use of the TD300 when the molded case circuit breaker is not de-energized can result in personal injury, spurious tripping of the circuit breaker and irreparable damage to the TD300.

Disconnect the molded case circuit breaker from the power supply before using the TD300 activation and trip box.

TD300: Connect, switch on and off, disconnect

Connect the TD300 to the 3VA2 molded case circuit breaker

1. Disconnect the molded case circuit breaker from the power supply.
2. Insert the connecting cable in the test socket of the ETU.

Switch the TD300 on and off

1. Check whether the molded case circuit breaker is disconnected from the power supply. If it is not, disconnect it.
2. Push the slide switch to ON.
   The LED labeled "ACT" on the TD300 lights up and the ETU display is activated. The TD300 is ready.

   If the "ACT" LED does not light up:

   - Push the slide switch to OFF.
   - Detach the connecting cable from the molded case circuit breaker.
   - Replace the batteries.
   - Follow the correct sequence of steps to connect the unit to the molded case circuit breaker again.
   - Push the slide switch to ON.
3. Push the slide switch to OFF.
   The LED labeled "ACT" on the TD300 goes out to indicate that the unit is switched off.

Disconnect the TD300 from the 3VA2 molded case circuit breaker

1. Switch off the molded case circuit breaker (OFF position).
2. Detach the connecting cable from the molded case circuit breaker.

LED states when the TD300 and the molded case circuit breaker are switched on

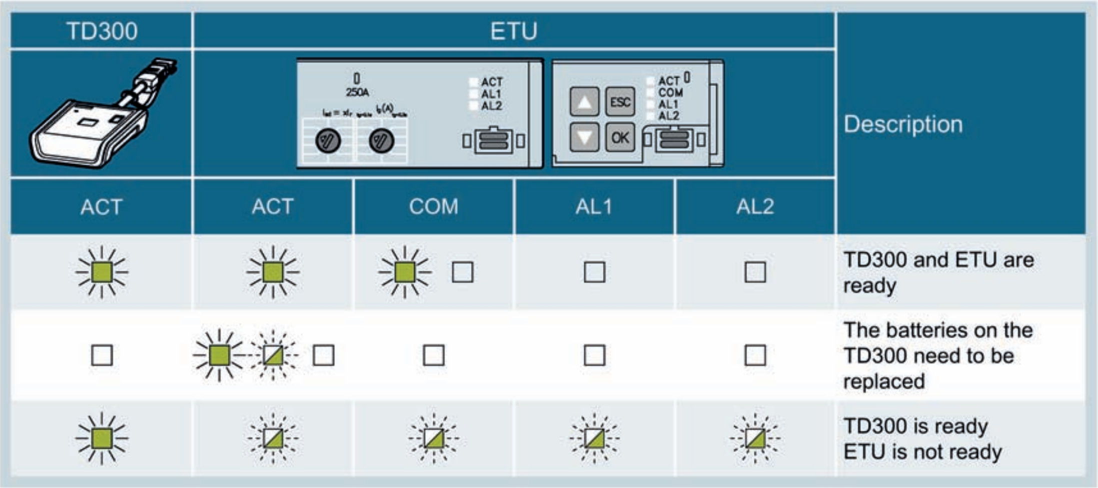

TD300	ETU				Description
ACT	ACT	COM	AL1	AL2	
🟩	🟩	🟩 ☐	☐	☐	TD300 and ETU are ready
☐	🟩 ▨ ☐	☐	☐	☐	The batteries on the TD300 need to be replaced
🟩	▨	▨	▨	▨	TD300 is ready ETU is not ready

Test the molded case circuit breaker (mechanical trip test)

1. Connect the TD300 to the molded case circuit breaker in the correct sequence and switch on.
2. Switch on the molded case circuit breaker (ON position).
3. Press the pushbutton labeled <TRIP> on the TD300.

The molded case circuit breaker trips:
The molded case circuit breaker is functioning correctly.

The molded case circuit breaker does not trip:

- Switch off the TD300.
- Switch off the molded case circuit breaker (OFF position).
- Detach the connecting cable from the molded case circuit breaker.
- Connect the TD300 correctly to the molded case circuit breaker again and switch on.
- Repeat the trip test (by pressing the pushbutton labeled <TRIP> on the TD300).
- If the molded case circuit breaker fails to trip again, contact Technical Support (Page 10) .

4.11.1.2 Technical specifications of TD300

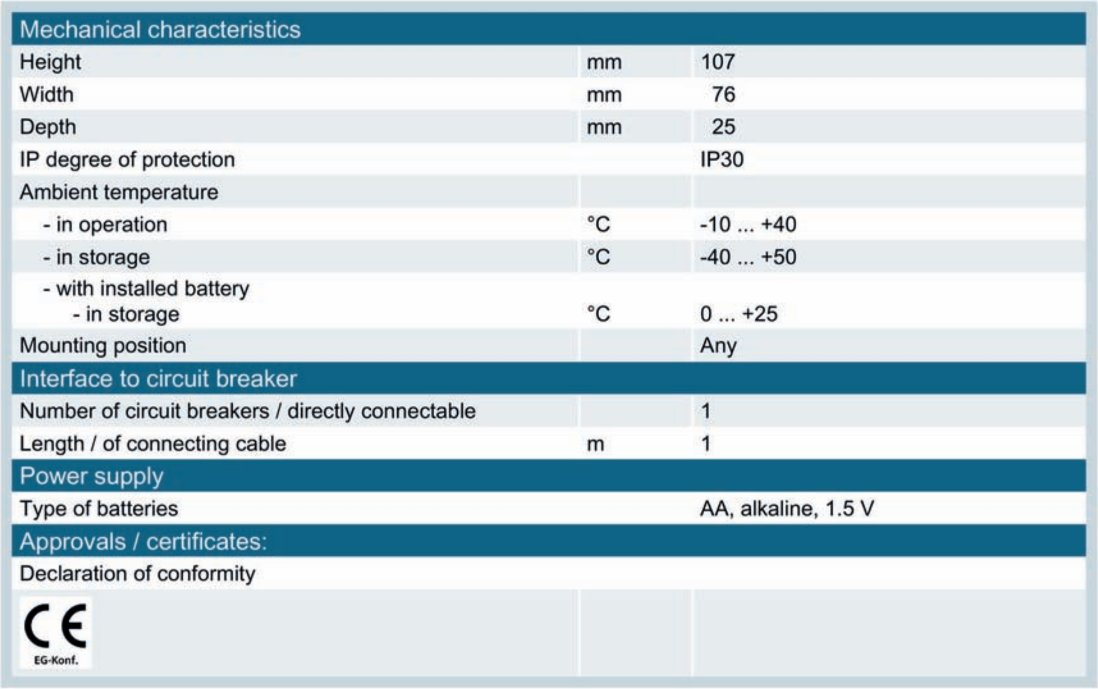

Mechanical characteristics		
Height	mm	107
Width	mm	76
Depth	mm	25
IP degree of protection		IP30
Ambient temperature		
- in operation	°C	-10 ... +40
- in storage	°C	-40 ... +50
- with installed battery - in storage	°C	0 ... +25
Mounting position		Any
Interface to circuit breaker		
Number of circuit breakers / directly connectable		1
Length / of connecting cable	m	1
Power supply		
Type of batteries		AA, alkaline, 1.5 V
Approvals / certificates:		
Declaration of conformity		
CE EG-Konf.		

4.11.2 TD500 test device

The TD500 mobile test device can be used to test the different causes of ETU trips. It is therefore useful for checking the proper functioning and correct wiring of all connected system components before the 3VA2 molded case circuit breaker is commissioned. The system behaves as it would in the case of a real trip event. The molded case circuit breaker trips when the set delay times expire and signals all alarms and tripped signals from connected components.

Benefits of the TD500 test device

- A TD500 test device via powerconfig can be used to successively parameterize all 3VA2 molded case circuit breakers directly in situ.
- The device can store up to 100 test results.
- Using the TD500 test device and the powerconfig software, it is possible to read out all diagnostic data of the 3VA2 molded case circuit breaker either digitally or as a hardcopy.
- In addition, test functions can be performed directly on the PC with the powerconfig software.

Description of the TD500

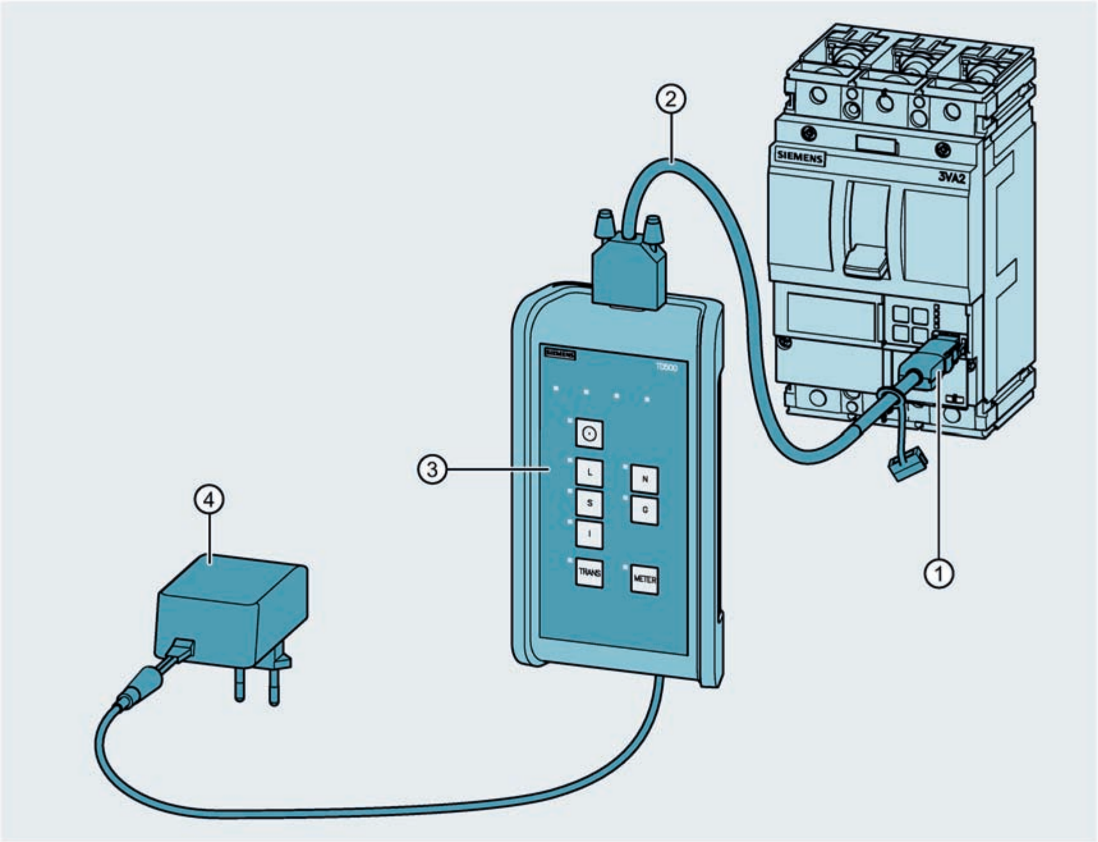

①	Plug-in connector for insertion in the test socket on the ETU
②	TD500-to-ETU connecting cable
③	TD500 test device
④	Power supply unit

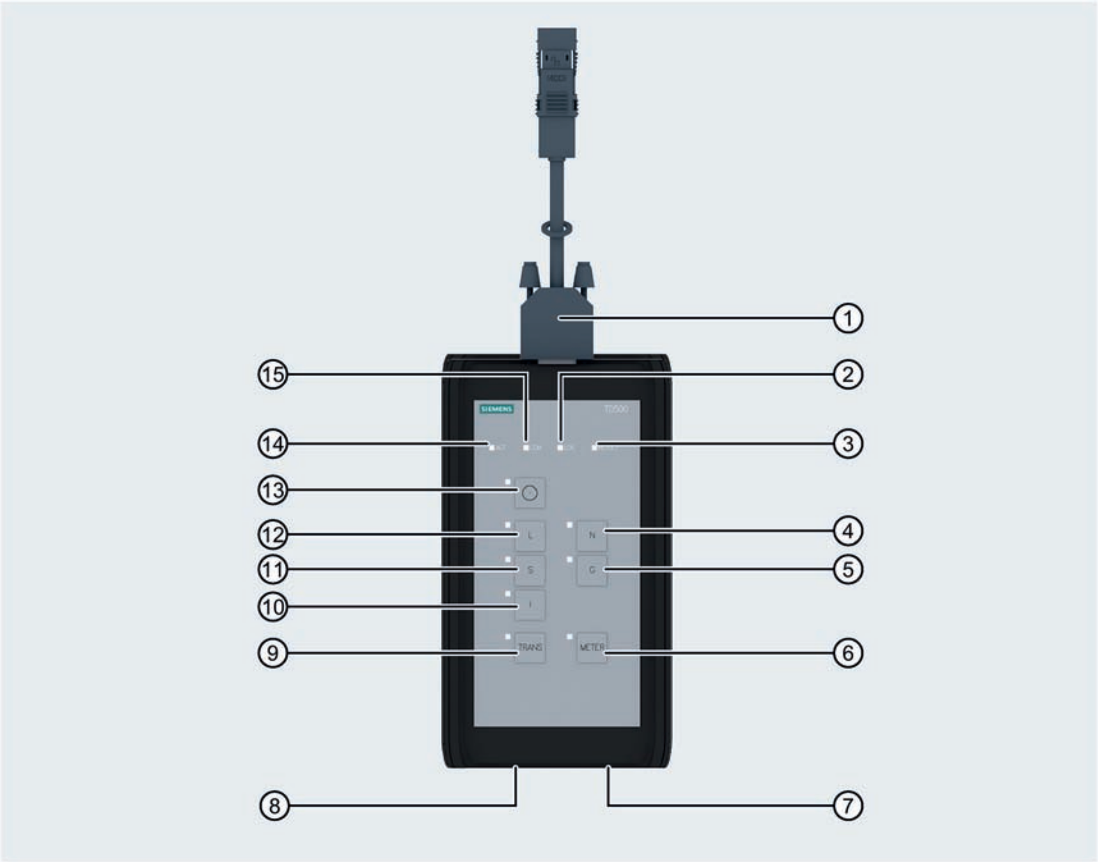

① Connecting cable for ETU
② LED "LOG" (available memory status)
③ LED "RESULT"
④ Pushbutton for neutral trip test N
⑤ Pushbutton for ground fault trip test G
⑥ Pushbutton for meter test (current measurement display)
⑦ PC connection
⑧ Mains cable connection
⑨ Pushbutton for transformer test
⑩ Pushbutton for instantaneous short-circuit trip test I
⑪ Pushbutton for short-time delayed short-circuit test S
⑫ Pushbutton for overload trip test L
⑬ Pushbutton for ETU Power ON/OFF
⑭ LED "ACT" (status)
⑮ LED "COM" (communication status)

LED display

LED	Meaning	Description
☐ ACT	Off	TD500 switched off
🟩 ACT	On	TD500 ready
☐ COM	Off	No communication link with ETU
◩ COM	Flashing (2 Hz)	- Establishing communication link with ETU - Communications error - TD500 not ready
🟩 COM	On	Communication link established with ETU
☐ LOG	Off	No free memory space The TD500 device can continue to be used, but the results of the trip tests will no longer be stored on the TD500. The device is still capable of executing all test functions.
◩ LOG	Flashing (2 Hz)	Available memory space < 25 % The TD500 device can continue to be used without restriction, but there is only enough memory space available to store a few test results. In order to ensure safe storage of test results, save the existing results to a PC and delete the contents of the TD500 memory using powerconfig.
🟩 LOG	On	Free memory space ≥ 25 % The TD500 device can continue to be used without restriction.
☐ RESULT	Off	No test has been carried out and no test result has been recorded.
🟥 RESULT	Flashing red (2 Hz)	It has not been possible to establish whether or not the molded case circuit breaker is functioning correctly.
🟩 RESULT	On	No faults have been detected.

Interfaces of the TD500 test device

The diagram below shows the physical interfaces of the TD500 test device.

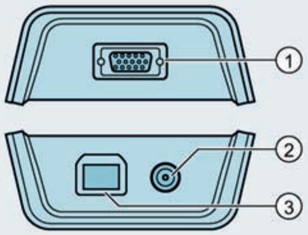

①	Top of unit:	Connection to 3VA2 molded case circuit breaker
②	Bottom of unit on right:	24 V DC supply
③	Bottom of unit on left:	Connection to PC

Compatibility with molded case circuit breakers

The TD500 test device can be connected to all 3VA2 molded case circuit breakers equipped with ETU 3-series, 5-series and 8-series. The connecting cable from the test device is inserted in the test socket of the ETU.

Data stored in the TD500

The following data are stored in the TD500:

- Article number
- ETU parameter settings
- Causes of ETU trips

Note

Readout of data and clearing of the internal memory of the TD500

Using a PC and the powerconfig software, you can read these data out of the TD500 and clear its internal memory.

Test functions of the TD500

The relevant pushbutton must be pressed in order to start a specific test. The molded case circuit breaker is tripped electronically when the pushbutton is actuated. This is essential to allow effectual testing of the electronic and mechanical control elements of the circuit breaker.

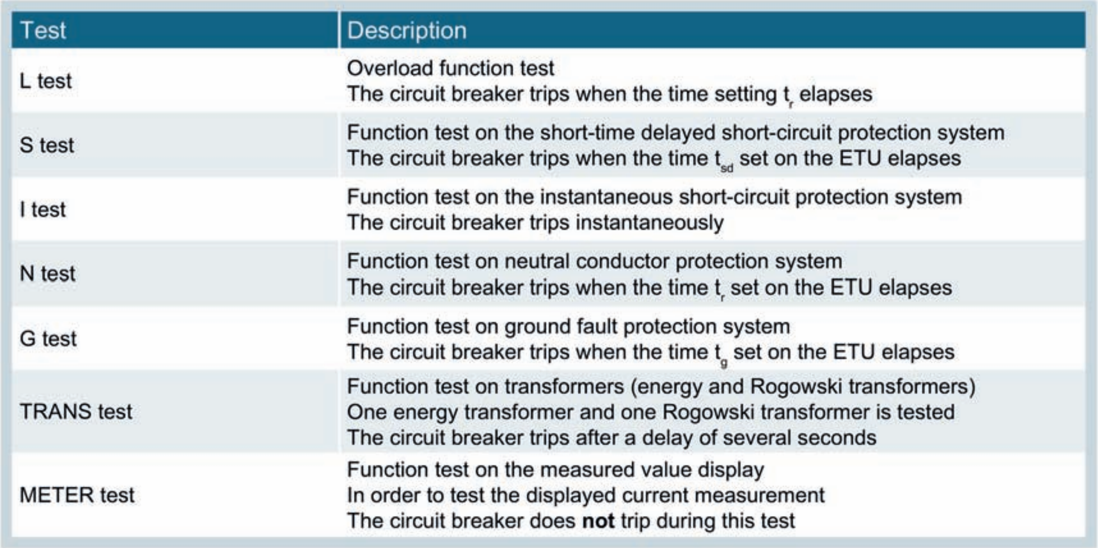

Test	Description
L test	Overload function test The circuit breaker trips when the time setting t_r elapses
S test	Function test on the short-time delayed short-circuit protection system The circuit breaker trips when the time t_{sd} set on the ETU elapses
I test	Function test on the instantaneous short-circuit protection system The circuit breaker trips instantaneously
N test	Function test on neutral conductor protection system The circuit breaker trips when the time t_r set on the ETU elapses
G test	Function test on ground fault protection system The circuit breaker trips when the time t_g set on the ETU elapses
TRANS test	Function test on transformers (energy and Rogowski transformers) One energy transformer and one Rogowski transformer is tested The circuit breaker trips after a delay of several seconds
METER test	Function test on the measured value display In order to test the displayed current measurement The circuit breaker does **not** trip during this test

4.11.2.1 Operation and execution of test functions

Connecting and disconnecting the TD500

CAUTION

Personal injury, malfunctions and false test results

Failure to connect the TD500 test device to the molded case circuit breaker according to the sequence of steps specified below can result in personal injury, malfunctions and false test results.

Disconnect the molded case circuit breaker from the power supply before connecting the TD500.

Strictly adhere to the sequence of steps described below for connecting the two devices.

Connecting the TD500 to the 3VA2 molded case circuit breaker

1. Disconnect the molded case circuit breaker from the power supply.
2. Insert the connecting cable in the socket on top of the TD500 test device.
3. Insert the connecting cable in the test socket of the ETU.
4. Insert the cable of the power supply unit in the socket on the bottom of the TD500 test device.
5. Connect the power supply unit to a socket.
   The TD500 test device is now switched on and ready.
6. Press the pushbutton labeled <ETU Power ON/OFF> ⊙ on the TD500 test device.
   The ETU is now powered via the TD500 and activated. Successful communication between the TD500 and ETU is indicated by illumination of the LED labeled "COM" on the TD500.

All test functions available for the connected ETU are indicated by illumination of the appropriately labeled LEDs.

Example: The L, S and I releases, the transformers (TRANS) and the current meter (METER) can be tested on the ETU:

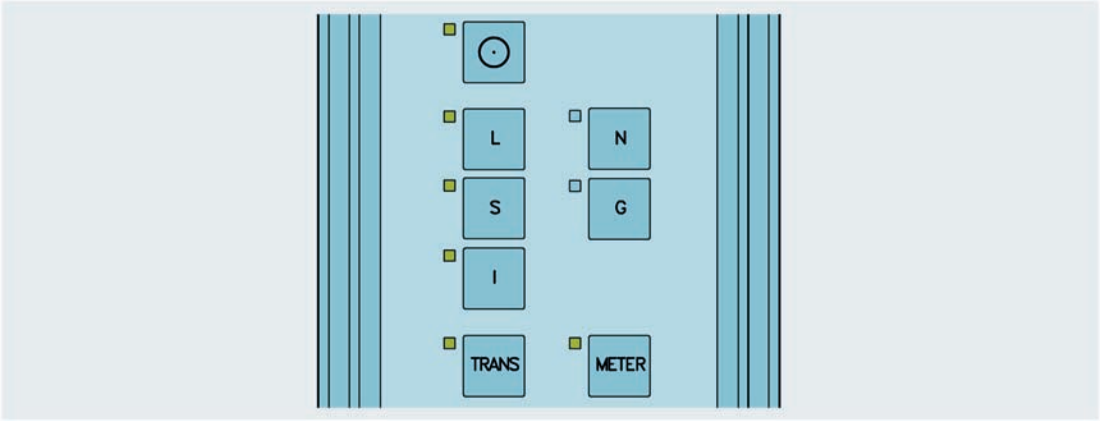

Disconnecting the TD500 from the 3VA2 molded case circuit breaker

1. Switch off the 3VA2 molded case circuit breaker.
2. Press the pushbutton labeled <ETU Power ON/OFF> ○ on the TD500 test device.
   The LED labeled "COM" on the TD500 goes out. The ETU is now no longer powered via the TD500 and is deactivated.
3. Disconnect the power supply unit from the socket.
4. Detach the power supply unit cable from the TD500.
5. Detach the connecting cable between the TD500 and the ETU.

Test tripping functions L, S, I, N and G

1. Connect the TD500 to the 3VA2 molded case circuit breaker as described above.
2. Switch on the 3VA2 molded case circuit breaker.
3. To test the tripping function, press one of the pushbuttons <L>, <S>, <I>, <N> or<G on the TD500 test device.

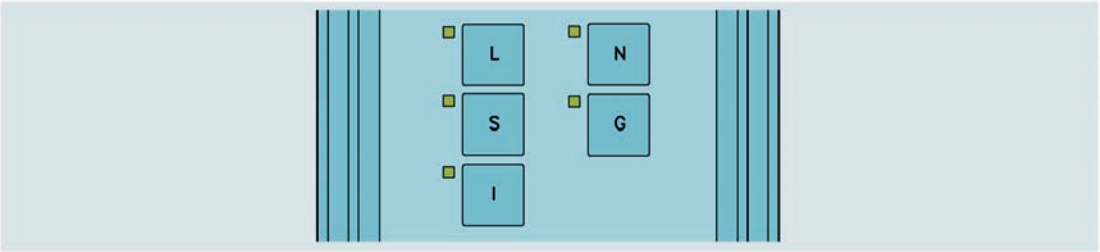

   - When a pushbutton is pressed, its LED flashes while the test is in progress.
   - The ETU trips when the set trip times expire and the molded case circuit breaker switches from "ON" to "TRIP".
   - On completion of the test, the LED of the selected pushbutton changes from flashing to steady illumination.

4. Wait for the test to end and evaluate the test result by the status of the LED labeled "RESULT":

   Test was successful:
   The LED "RESULT" lights up green.

   Test was unsuccessful:
   The LED "RESULT" flashes red.
   Repeat the test. If the test fails again, contact Technical Support (Page 10) .

5. Press the pushbutton for the same tripping function again in order to confirm the test result and restore the TD500 to its initial state.
6. Switch on the molded case circuit breaker again (ON position) in order to carry out further tripping function tests.

Example: Testing the tripping function L on an ETU550 LSI

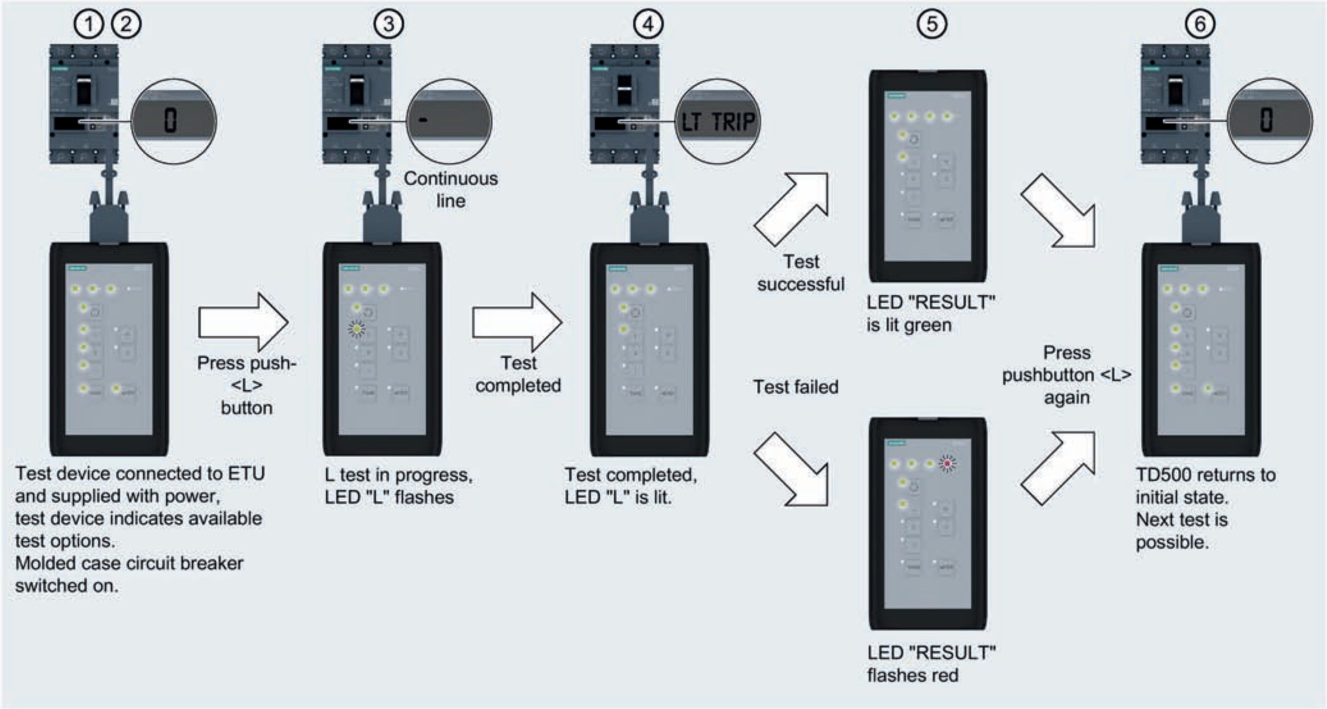

1. Connect the TD500 test device to the 3VA2 molded case circuit breaker.
2. Switch on the 3VA2 molded case circuit breaker.
3. Press pushbutton <L> on the TD500 test device.
   The LED in the pushbutton <L> starts to flash.
4. Wait until the LED in the pushbutton <L> changes from flashing to steady illumination.
   The test is completed.
5. Evaluate the test result by the status of the LED labeled "RESULT":

   LED "RESULT" is **illuminated steadily in green: The test was successful**.

   LED "RESULT" flashes **red: The test was unsuccessful** and must be repeated**.** If the test fails again, contact Technical Support (Page 10) .
6. Press the pushbutton <L> again in order to confirm the test result and restore the TD500 to its initial state.

Carry out a meter test

The purpose of the meter test is to determine whether the ETU is measuring and displaying current correctly. A test current of 0.4 x I_n is fed into the ETU. The current value measured by the ETU is then checked to confirm that it matches the test current.

Note

The molded case circuit breaker does **not** need to be switched to position "ON" for this test.

Execute the test

1. Connect the TD500 test device to the 3VA2 molded case circuit breaker.
2. Press the pushbutton labeled <METER> ①.

   The LED in the <METER> pushbutton begins to flash. The test takes approximately 30 seconds.
3. Wait until the LED in the pushbutton <METER> changes from flashing to steady illumination.
   The test is completed.
4. Evaluate the test result by the status of the LED labeled "RESULT":

   LED "RESULT" is **illuminated steadily in green: The test was successful**.

   LED "RESULT" flashes **red: The test was unsuccessful** and must be repeated. If the test fails again, contact Technical Support (Page 10) .
5. Press the pushbutton <METER> again in order to confirm the test result and restore the TD500 to its initial state.

Test transformers

This procedure tests the transformers (energy transformer or Rogowski coil) to determine the following:

- Are transformers installed in the ETU?
- Are transformers correctly installed in the ETU?
- Are the installed transformers functioning correctly?

Note

In order to carry out this test, it is absolutely essential to disconnect all external power supplies (e.g. EFB300, COM800, COM100, 24 V module) to the electronics.

Execute the test

1. Disconnect all external power supplies to the electronics.
2. Connect the TD500 test device to the 3VA2 molded case circuit breaker.
3. Switch on the 3VA2 molded case circuit breaker.
4. Press the pushbutton labeled <TRANS> ①.

   The LED in the <TRANS> pushbutton begins to flash. The test takes several seconds.

5. Wait until the LED in the pushbutton <TRANS> changes from flashing to steady illumination.
   The test is completed.
6. Evaluate the test result by the status of the LED labeled "RESULT":

   LED "RESULT" is **illuminated steadily in green: The test was successful**.

   LED "RESULT" flashes **red: The test was unsuccessful** and must be repeated. If the test fails again, contact Technical Support (Page 10) .
7. Press the pushbutton <TRANS> again in order to confirm the test result and restore the TD500 to its initial state.

4.11.2.2 Executing the test functions using a PC and powerconfig

In addition to its capabilities as a stand-alone test device, the TD500 can also act as a PC interface to the ETU.

If the TD500 test device is connected both to the ETU and a PC, the protective functions can be triggered from a PC on which the powerconfig software is installed. A test log for the molded case circuit breaker is generated and stored in the powerconfig project. The test log can be printed out.

Connections between ETU - TD500 - PC

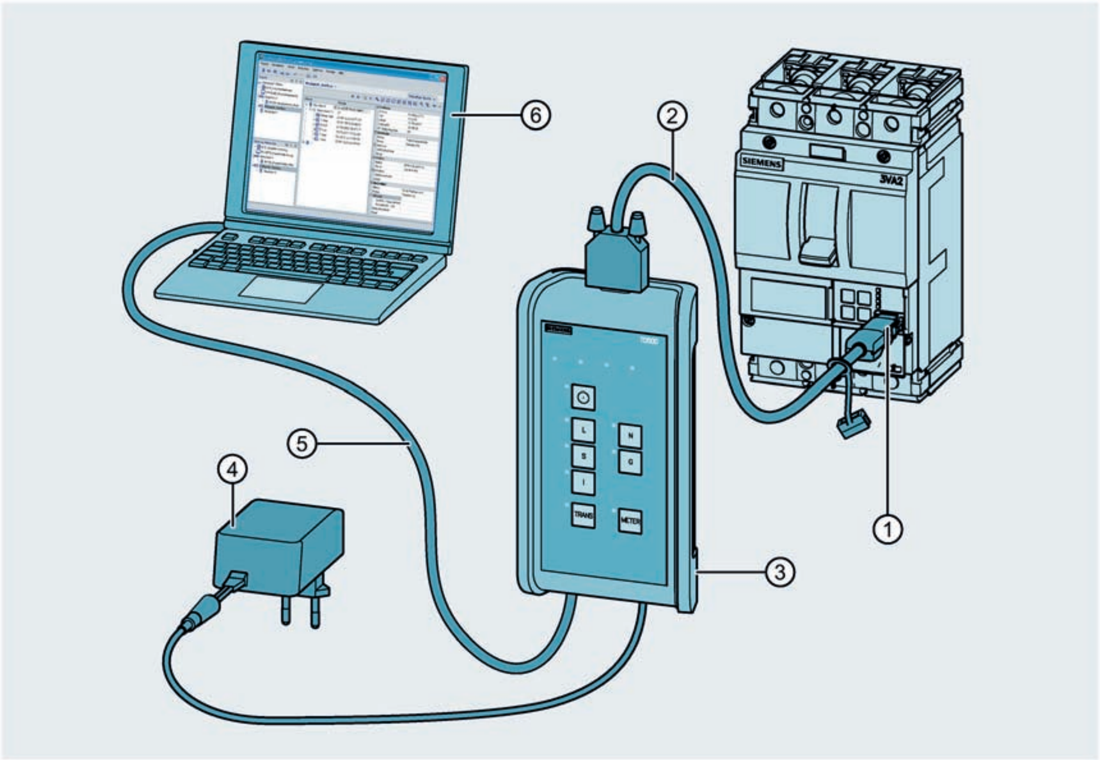

①	Plug-in connector for insertion in the test socket on the ETU	④	Power supply unit
②	TD500-to-ETU connecting cable	⑤	USB connecting cable
③	TD500 test device	⑥	PC with powerconfig installed

4.11.2.3 Parameterizing using the powerconfig software

In addition to test functions, the powerconfig software package also provides tools for assigning parameters to ETU 5-series and 8-series.

These tools allow you to:

- assign parameters to ETU 5-series and 8-series
- store parameter settings for ETU 5-series and 8-series in the powerconfig project and print them out

4.11.2.4 Technical specifications of TD500

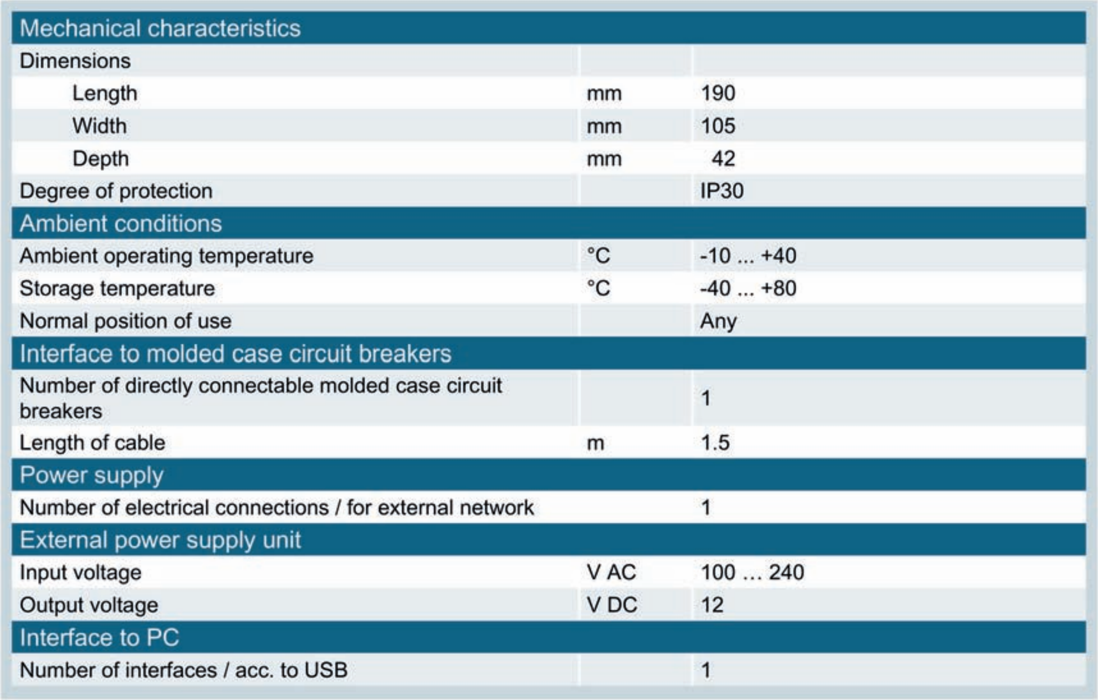

Mechanical characteristics		
Dimensions		
Length	mm	190
Width	mm	105
Depth	mm	42
Degree of protection		IP30
Ambient conditions		
Ambient operating temperature	°C	-10 ... +40
Storage temperature	°C	-40 ... +80
Normal position of use		Any
Interface to molded case circuit breakers		
Number of directly connectable molded case circuit breakers		1
Length of cable	m	1.5
Power supply		
Number of electrical connections / for external network		1
External power supply unit		
Input voltage	V AC	100 … 240
Output voltage	V DC	12
Interface to PC		
Number of interfaces / acc. to USB		1

4.12 External current transformer for N conductor

The external current transformer for the N conductor is a current transformer for 3-pole 3VA2 molded case circuit breakers with 5-series and 8-series ETUs.

This transformer can be used to provide protection for the N conductor against overload as well as for ground-fault protection.

4.12.1 Parameterization of the external N transformer

N conductor protection against overload

The function "N conductor protection I_N" is deactivated ("OFF") as standard (factory setting) in 5-series and 8-series ETUs.
If an external N transformer is connected to 5-series or 8-series ETUs, the "N conductor protection I_N" must be manually activated on the ETU and adjusted according to system requirements.

Ground-fault protection

If the external N conductor is used with 5-series or 8-series ETU variants with ground-fault protection, ETU560 and ETU860, no parameterization is required at the user end. As soon as the external N transformer is connected to the ETU, the N conductor is also automatically monitored for ground-fault protection.

4.12.2 External current transformer for front busbar connector up to 630 A

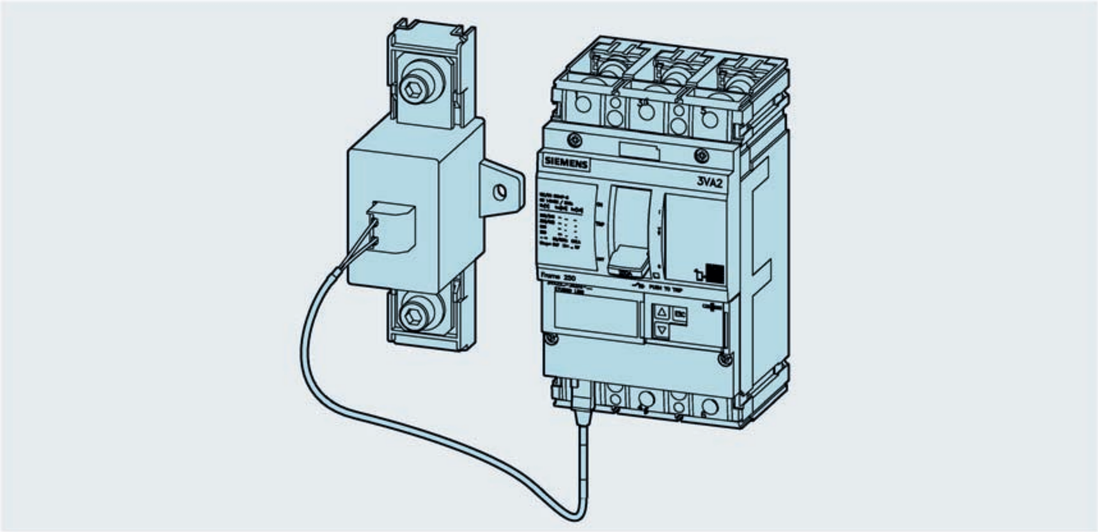

Rated current I_n 3VA2 circuit breakers	Article number External current transformer	Rated current I_n External current transformer	Measuring range
25 / 40 / 63 / 100 A	3VA9007 – 0NA10	25 … 150 A	0.05 … 15 x I_n
160 / 250 A	3VA9107 – 0NA10	160 … 350 A	
400 / 500 / 630 A	3VA9307 – 0NA10	400 … 630 A	

Technical specifications

	Rated current I_n		
	25 … 150 A	160 … 250 A	400 … 630 A
Rated frequency	50/60 Hz		
Rated operational voltage U_e	Max. 690 V		
Rated impulse strength U_{imp}	8 kV		
Rated insulation voltage U_i	0.8 kV		
IP degree of protection	IP00		
Ambient temperature	–25 °C … 50 °C		
> 50 °C: Derating	7.5 % / 10 K		
Max. bar temperature	115 °C at 50 °C ambient temperature		

4.12.3 External current transformer as straight-through transformer up to 1250 A

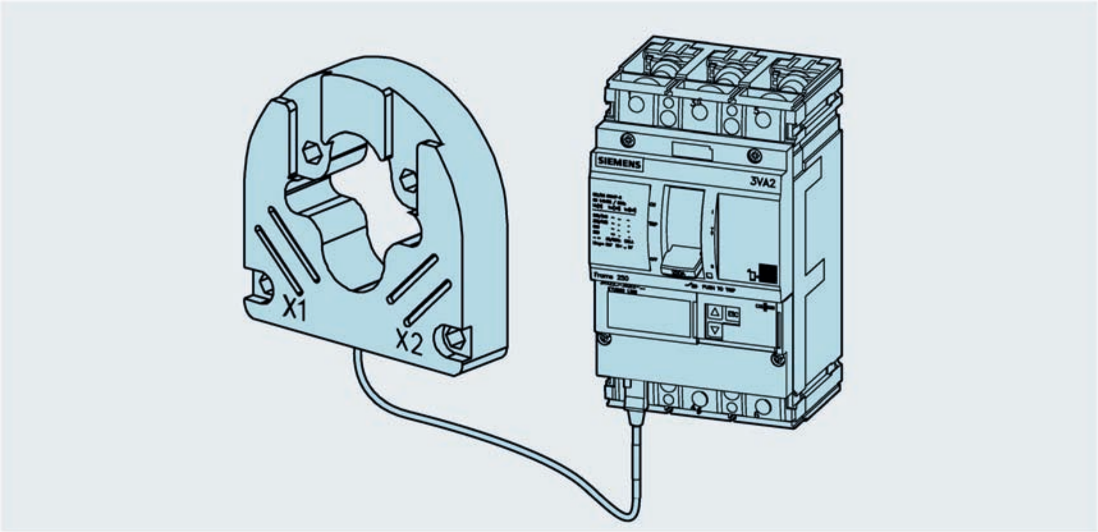

Rated current I_n 3VA2 circuit breakers	Article number External current transformer	Rated current I_n External current transformer	Measuring range	For cable cross-sections	For busbar cross-sections
25 / 40 / 63 / 100 A	3VA9007 – 0NA10	25 … 150 A	0.05 … 15 x I_n	2 x 300 mm² 2 x 600 kcmil	1 x 50 x 10 mm 2 x 40 x 10 mm 0.5 x 3 in
160 / 250 A	3VA9107 – 0NA10	160 … 350 A			
400 / 500 / 630 A	3VA9307 – 0NA10	400 … 630 A			
630 / 800 / 1000 A	3VA9677 – 0NA10	600 … 1250 A		—	2 x 100 x 10 mm 1.25 in x 4 in

Technical specifications

	Rated current I_n			
	25 … 150 A	160 … 250 A	400 … 630 A	600 … 1250 A
Rated frequency	50/60 Hz			
Rated operational voltage U_e	Max. 690 V			
Rated impulse strength U_{imp}	8 kV			
Rated insulation voltage U_i	0.8 kV			
IP degree of protection	IP30			
Ambient temperature	–25 °C … 70 °C			
Max. bar temperature	115 °C at 50 °C ambient temperature			

4.13 Escutcheon

Molded case circuit breakers or supplementary motor operators or front mounted rotary operators for molded case circuit breakers are often installed in panels or distribution boards in such a way that only the operating device is directly accessible. Busbars, cables and the termination area of the molded case circuit breaker are covered by metal or plastic plates in order to prevent direct contact with live components. The panel door itself is often designed as a protective cover.

Cutouts must be made in these covers

- in order to allow access to control elements,
- which are designed to prevent direct contact with cables, and
- which are large enough in size that the cover can be closed easily.

All these requirements necessitate gap dimensions of a few millimeters between the cutout and the unit.

Cover frames are installed in cases where the gap size needs to be minimized and the gaps covered. The use of cover frames makes for a clean-lined, attractive panel front face and provides a higher degree of protection (IP30).

4.13.1 Product description

Cover frames are available for the following items of equipment from the 3VA product range:

- 3VA1 / 3VA2 molded case circuit breakers, 3-pole or 4-pole: Handle area only
- 3VA1 / 3VA2 molded case circuit breakers, 3-pole or 4-pole: Area around handle and trip unit
- Front mounted rotary operator
- Motor operators
- Loadside residual current devices, 3-pole or 4-pole
- Door feedthroughs

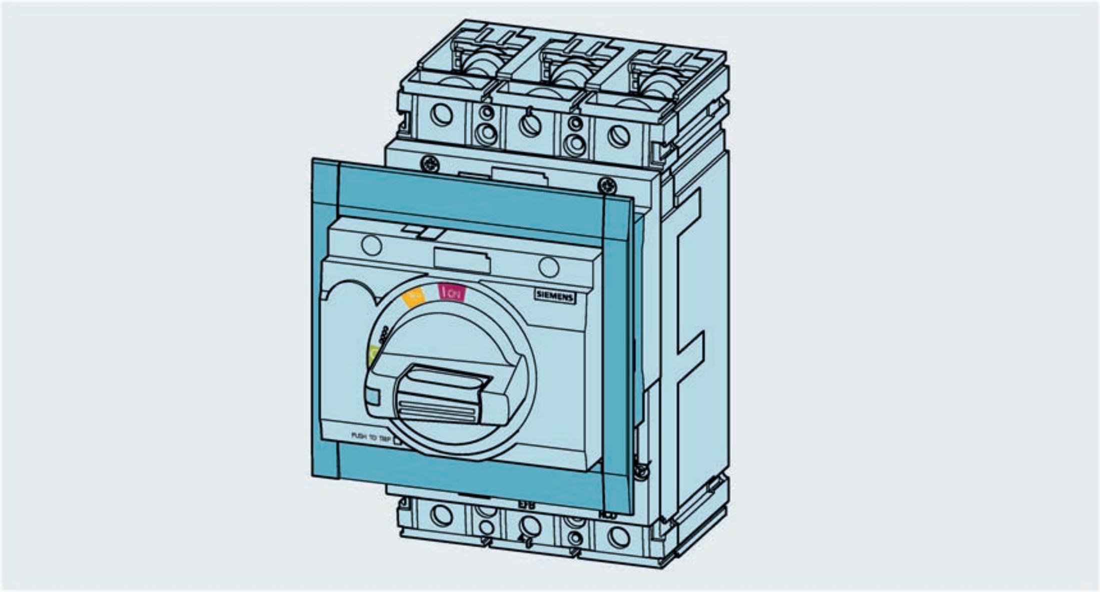

Installation

1. Cut out an opening in the cover plate.
   Refer to the operating instructions for the correct cutout dimensions.
2. Insert the cover frame into the cutout from the front and fasten by means of small spring steel sheets at the rear of the cover plate.

The fastening system is designed such that the the cover frame can move in the cutout. In other words, the cover frame is "float-mounted". Tolerance compensation in the range ± 3 mm / ± 0.12" is thus possible in the horizontal direction and in the range ± 6 mm / ± 0.24" in the vertical direction. On the one hand, this tolerance compensation is required to achieve the small gap dimension of max. ± 0.5 mm / ± 0.19" between the cover frame and device. On the other hand, it is needed to compensate for tolerances, e.g. in the panel, which are always present due to the construction.

Typical tolerance compensation examples are:

- Tolerance compensation of the door angle with right-hinged or left-hinged doors
- Tilting of devices under their own weight when they are fastened to thin mounting plates

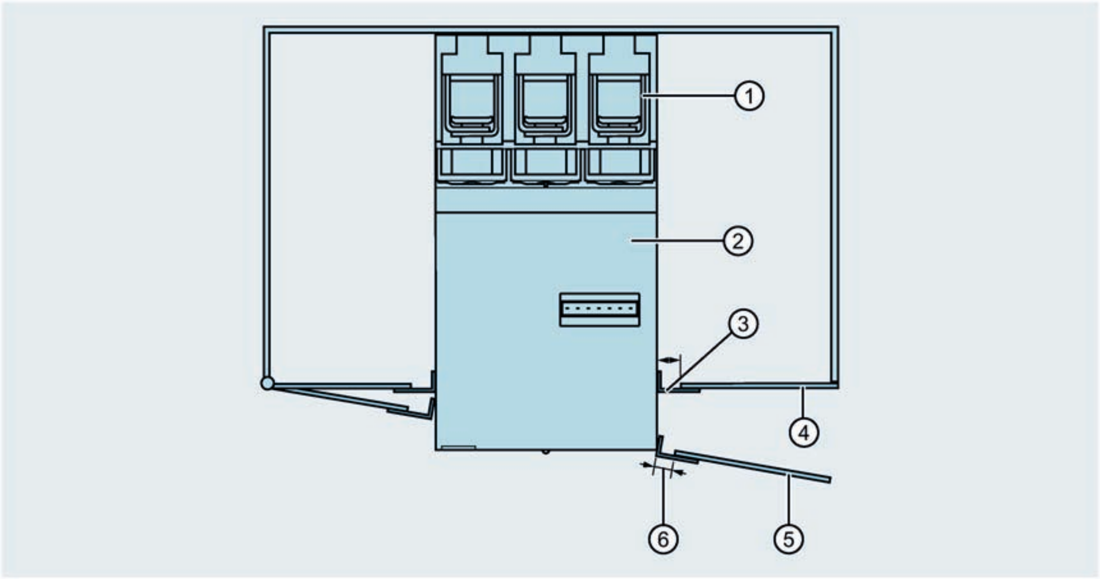

①	Molded case circuit breaker
②	Motor operator
③	Cover frame
④	Panel door (closed)
⑤	Panel door (open)
⑥	Tolerance compensation

Note

To ensure that the panel door can still be opened, a mounted accessory component must not project beyond the cover frame by more than 5 mm / 0.19" when the door is closed.

4.13.2 Labeling plate

A supplementary labeling plate (3VA9087-0SX10) is available for the cover frame.

It can be latched in position in the center of any of the four sides of the cover frame. Paper or plastic labels displaying plant-specific information are attached by adhesive to the labeling plate.

The scope of supply includes ten labeling plates and ten aluminum-colored labels.

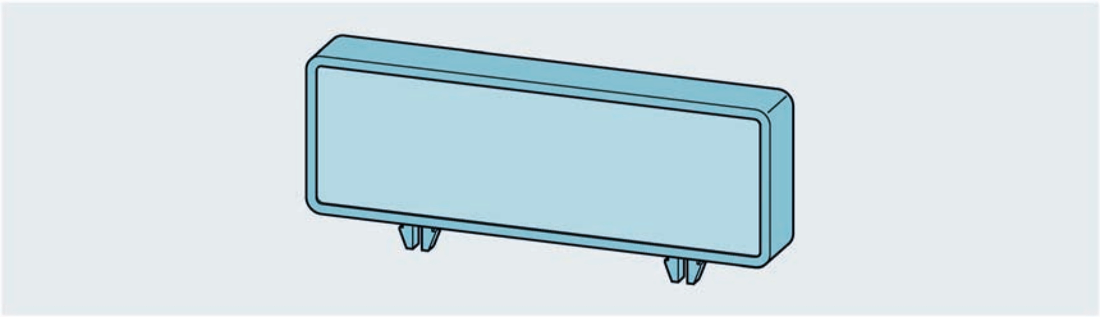

4.14 DIN rail adapter

4.14.1 Introduction

Description of application and basic function

The DIN rail adapter is used to mount molded case circuit breakers on 35 mm DIN rails of meter or distribution cubicles, for example. DIN rail adapters are available exclusively for 3VA1 molded case circuit breakers in sizes 100 A and 160 A since, on the one hand, DIN rails are not designed to support heavy weights and, on the other, only molded case circuit breakers with thermal-magnetic trip units and rated operational currents up to maximum 160 A are normally installed in distribution boards.

The DIN rail adapters are snapped onto the rear panel of the molded case circuit breaker or fastened by screws. With an adapter installed, the circuit breaker is simple to attach to a DIN rail. This is done by placing the circuit breaker with attached DIN rail adapter from above onto the DIN rail and then pressing the bottom half of the circuit breaker lightly against the rail until the adapter engages.

Overview of variants and products

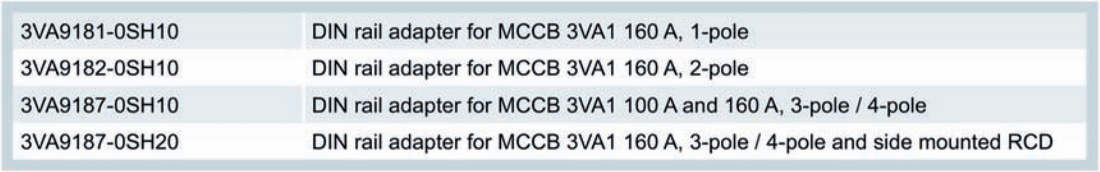

3VA9181-0SH10	DIN rail adapter for MCCB 3VA1 160 A, 1-pole
3VA9182-0SH10	DIN rail adapter for MCCB 3VA1 160 A, 2-pole
3VA9187-0SH10	DIN rail adapter for MCCB 3VA1 100 A and 160 A, 3-pole / 4-pole
3VA9187-0SH20	DIN rail adapter for MCCB 3VA1 160 A, 3-pole / 4-pole and side mounted RCD

4.14.2 Information about installation, assembly and attachment

3VA1 160 1-pole and 2-pole molded case circuit breakers

3VA1 160 1-pole molded case circuit breakers

To attach these to a DIN rail, a 3VA9181-0SH10 DIN rail adapter is required. This DIN rail adapter is not attached by screws to the molded case circuit breaker, but simply snapped into place on the rear panel.

3VA1 160 2-pole molded case circuit breakers

To attach 2-pole molded case circuit breakers to 35 mm DIN rails, a 3VA9182-0SH10 DIN rail adapter is required. This adapter is fitted with threaded nuts. The molded case circuit breakers are screwed onto the adapter by means of the mounting screws supplied with the circuit breakers. The nuts supplied with the circuit breakers are not required.

3VA1 100 and 3VA1 160 3-pole and 4-pole molded case circuit breakers

To attach 3-pole and 4-pole molded case circuit breakers to 35 mm DIN rails, a 3VA9187-0SH10 DIN rail adapter is required. This adapter is fitted with threaded nuts. The molded case circuit breakers are screwed onto the adapter by means of the mounting screws supplied with the circuit breakers. The nuts supplied with the circuit breakers are not required.

3VA1 100 and 3VA1 160 3-pole and 4-pole molded case circuit breakers with side mounted residual current device

The 3VA9187-0SH20 DIN rail adapter has been specially developed for use with molded case circuit breakers combined with side mounted residual current device. This DIN rail adapter is also fitted with threaded nuts so that the molded case circuit breaker/residual current device assembly can be fastened to it by means of the screws included in the scope of supply of both devices.

Assembly instructions

The molded case circuit breaker must first be attached to the DIN rail adapter. 3-pole molded case circuit breakers must be attached such that their right-hand edge (when viewed from above) is flush with the DIN rail adapter. With 4-pole molded case circuit breakers, the N pole is situated opposite on the left-hand side (when viewed from above). The screws are inserted in the fastening holes between phases 1 and 2, and between phases 2 and 3, in the molded case circuit breaker.

After the molded case circuit breaker has been attached to the DIN rail adapter, the residual current device must also be mounted on the adapter. After the residual current device has been secured in position on the DIN rail adapter, the main current paths of the residual current device and the molded case circuit breaker must be checked to ensure that they are properly aligned and connected.

Information about combination with other accessories

DIN rail adapters are normally used to install molded case circuit breakers (possibly with side mounted residual current device) in distribution boards. The standard cover is then fitted over the circuit breakers. The front panel (45 mm high) is the only part of the device which protrudes through the cover. With this arrangement, it is not possible to use front mounted accessories.

When molded case circuit breakers including DIN rail adapter are installed on rails in an open system panel without a cover, it is possible to use front mounted accessories such as motor operator, rotary operator with shaft stub, front mounted rotary operator and the front mounted Bowden cable interlock module.

The following accessories are compatible with molded case circuit breakers and DIN rail adapters:

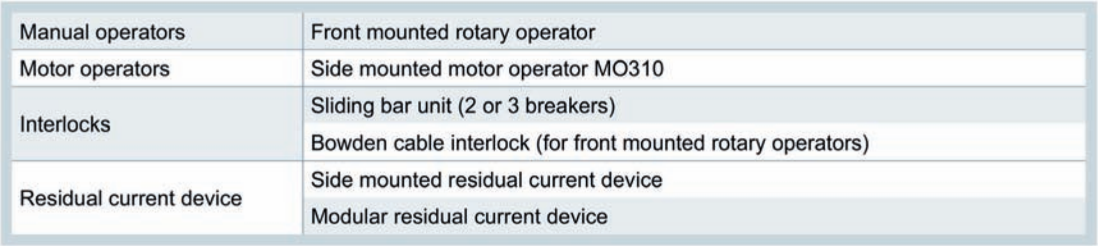

Manual operators	Front mounted rotary operator
Motor operators	Side mounted motor operator MO310
Interlocks	Sliding bar unit (2 or 3 breakers)
	Bowden cable interlock (for front mounted rotary operators)
Residual current device	Side mounted residual current device
	Modular residual current device

5

Service and maintenance

5.1 Notes

Qualified personnel

It is essential to refer to this documentation when setting up and operating a device/system described here. The device/system must only ever be serviced and maintained by qualified personnel. For the purpose of the safety information in these operating instructions, a "qualified person" is someone who is authorized to energize, ground, and tag equipment, systems, and circuits in accordance with established safety procedures.

Maintenance category

Maintenance category	Maintenance interval
Inspection	Annually
Maintenance	As required; 10 years after delivery at the latest
Corrective maintenance	As required; 20 years after delivery or after 1000 switching cycles at the latest

5.2 Regular maintenance

Recommended maintenance/inspection intervals

Following initial commissioning, the equipment/system must be inspected at least once per year.

In addition, an inspection should be carried out after 1000 trips at rated operational current.

If the molded case circuit breaker or switch disconnector is operated in an atmosphere that is dust-laden or in which corrosive vapors, gases, or salt spray is present, it is advisable to adjust the inspection intervals accordingly, e.g. to twice per year.

Inspection procedure recommended for 3VA molded case circuit breakers / switch disconnectors

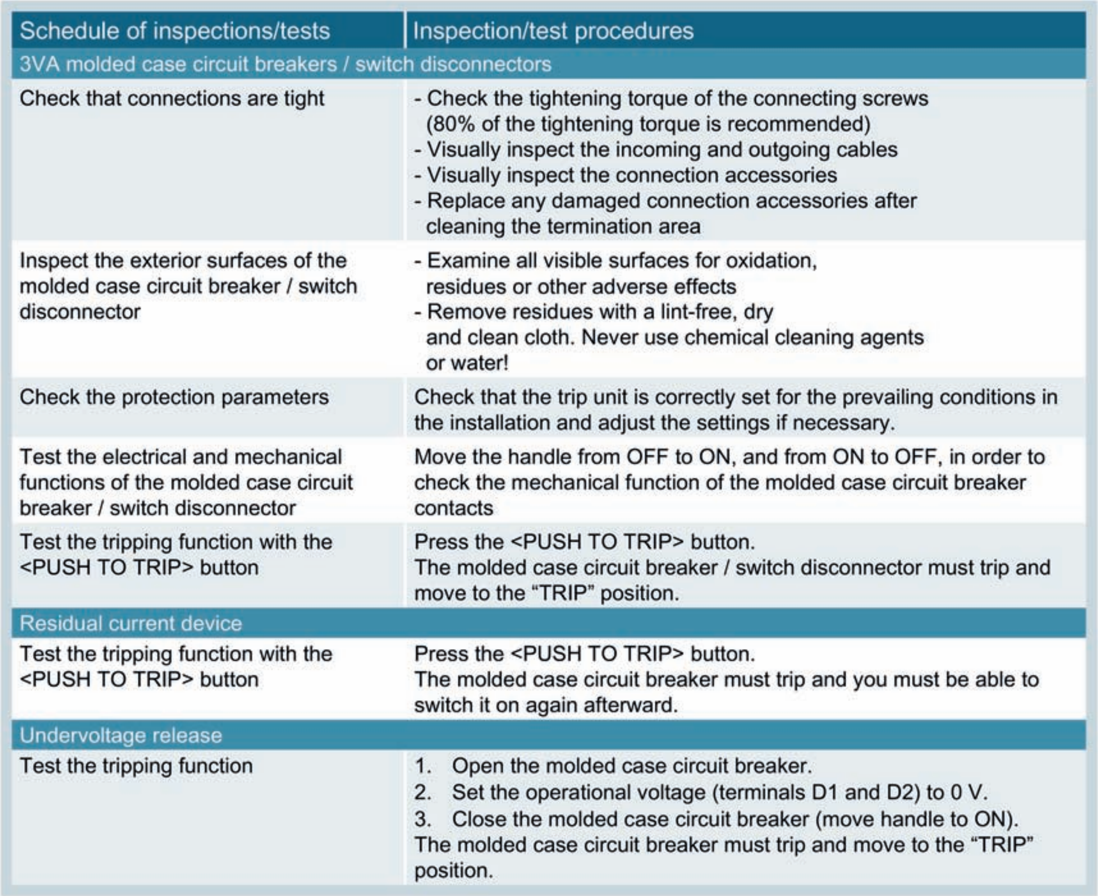

Schedule of inspections/tests	Inspection/test procedures
3VA molded case circuit breakers / switch disconnectors	
Check that connections are tight	- Check the tightening torque of the connecting screws (80% of the tightening torque is recommended) - Visually inspect the incoming and outgoing cables - Visually inspect the connection accessories - Replace any damaged connection accessories after cleaning the termination area
Inspect the exterior surfaces of the molded case circuit breaker / switch disconnector	- Examine all visible surfaces for oxidation, residues or other adverse effects - Remove residues with a lint-free, dry and clean cloth. Never use chemical cleaning agents or water!
Check the protection parameters	Check that the trip unit is correctly set for the prevailing conditions in the installation and adjust the settings if necessary.
Test the electrical and mechanical functions of the molded case circuit breaker / switch disconnector	Move the handle from OFF to ON, and from ON to OFF, in order to check the mechanical function of the molded case circuit breaker contacts
Test the tripping function with the <PUSH TO TRIP> button	Press the <PUSH TO TRIP> button. The molded case circuit breaker / switch disconnector must trip and move to the "TRIP" position.
Residual current device	
Test the tripping function with the <PUSH TO TRIP> button	Press the <PUSH TO TRIP> button. The molded case circuit breaker must trip and you must be able to switch it on again afterward.
Undervoltage release	
Test the tripping function	1. Open the molded case circuit breaker. 2. Set the operational voltage (terminals D1 and D2) to 0 V. 3. Close the molded case circuit breaker (move handle to ON). The molded case circuit breaker must trip and move to the "TRIP" position.

Optional inspection procedure for the ETU of the 3VA2 molded case circuit breaker

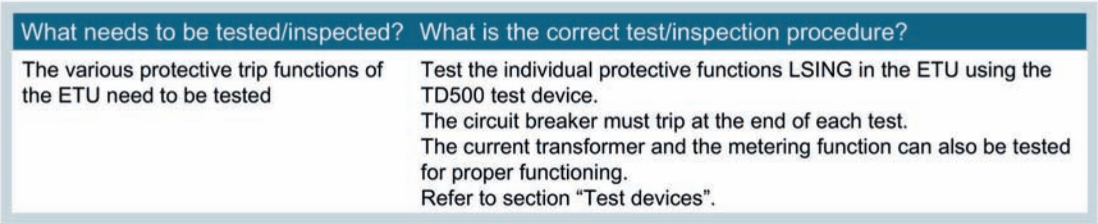

What needs to be tested/inspected?	What is the correct test/inspection procedure?
The various protective trip functions of the ETU need to be tested	Test the individual protective functions LSING in the ETU using the TD500 test device. The circuit breaker must trip at the end of each test. The current transformer and the metering function can also be tested for proper functioning. Refer to section "Test devices".

5.3 Maintenance following tripping of a molded case circuit breaker

If a 3VA molded case circuit breaker trips on overcurrent (overload, short circuit) or residual current (ground fault or via residual current device), the cause of the trip must be identified and rectified before the molded case circuit breaker is switched on again.

In the case of 3VA1 molded case circuit breakers with thermal-magnetic trip units, the cause of tripping can be determined by means of the SAS short circuit alarm switch. With 3VA2 molded case circuit breakers, the cause of tripping can be output via the EFB300 external function box. With electronic trip units 5-series and 8-series ETUs, the cause of tripping can be indicated on the LCD and optionally transferred via communication modules.

An inspection as described in chapter Regular maintenance (Page 535) should be carried out every time the molded case circuit breaker is tripped by the trip unit. In addition, all black residues on the molded case circuit breaker must be removed as they might contain conductive particles. The molded case circuit breaker should then be switched on and off without load at least five times.

5.4 Fault diagnostics

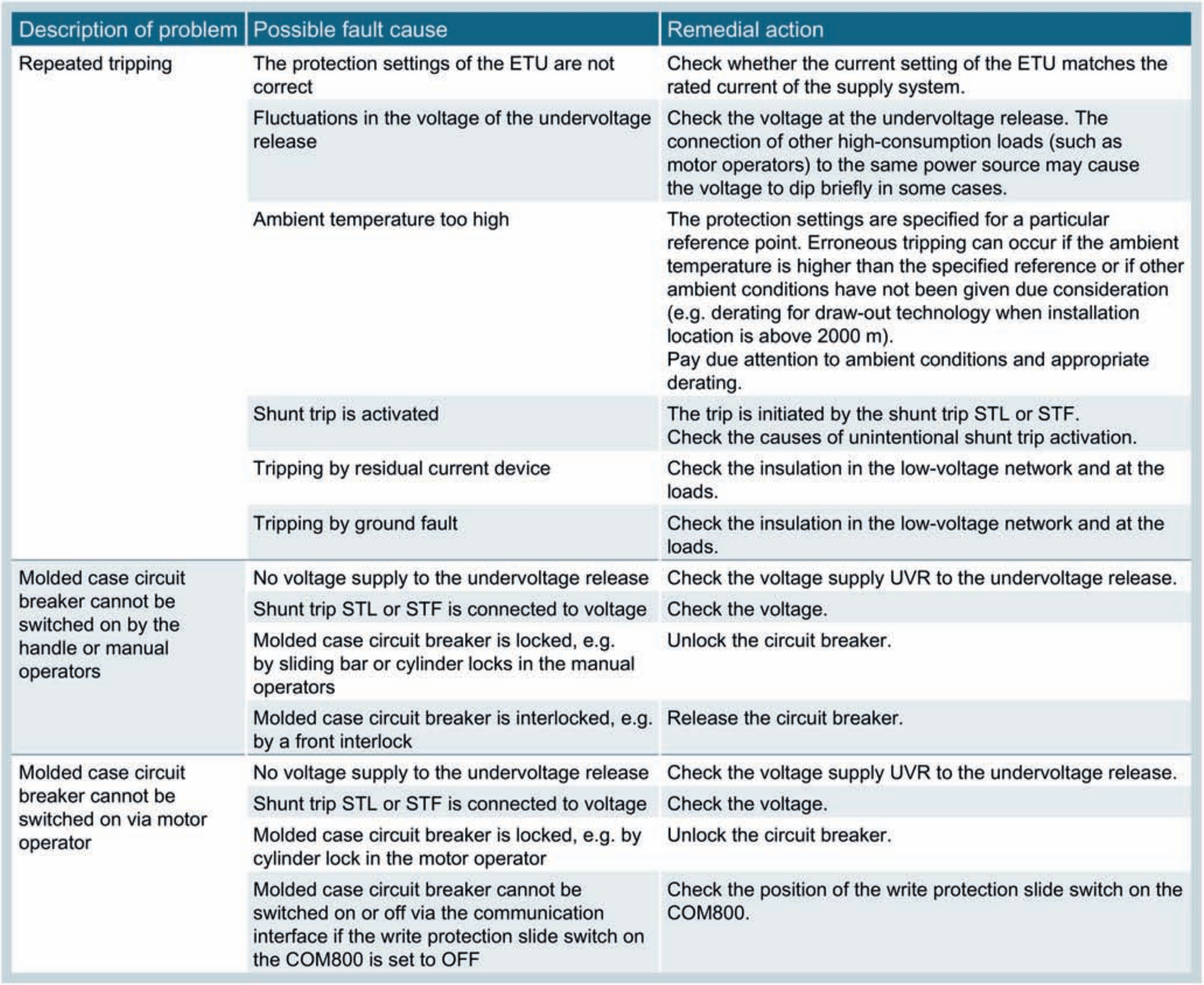

Description of problem	Possible fault cause	Remedial action
Repeated tripping	The protection settings of the ETU are not correct	Check whether the current setting of the ETU matches the rated current of the supply system.
	Fluctuations in the voltage of the undervoltage release	Check the voltage at the undervoltage release. The connection of other high-consumption loads (such as motor operators) to the same power source may cause the voltage to dip briefly in some cases.
	Ambient temperature too high	The protection settings are specified for a particular reference point. Erroneous tripping can occur if the ambient temperature is higher than the specified reference or if other ambient conditions have not been given due consideration (e.g. derating for draw-out technology when installation location is above 2000 m). Pay due attention to ambient conditions and appropriate derating.
	Shunt trip is activated	The trip is initiated by the shunt trip STL or STF. Check the causes of unintentional shunt trip activation.
	Tripping by residual current device	Check the insulation in the low-voltage network and at the loads.
	Tripping by ground fault	Check the insulation in the low-voltage network and at the loads.
Molded case circuit breaker cannot be switched on by the handle or manual operators	No voltage supply to the undervoltage release	Check the voltage supply UVR to the undervoltage release.
	Shunt trip STL or STF is connected to voltage	Check the voltage.
	Molded case circuit breaker is locked, e.g. by sliding bar or cylinder locks in the manual operators	Unlock the circuit breaker.
	Molded case circuit breaker is interlocked, e.g. by a front interlock	Release the circuit breaker.
Molded case circuit breaker cannot be switched on via motor operator	No voltage supply to the undervoltage release	Check the voltage supply UVR to the undervoltage release.
	Shunt trip STL or STF is connected to voltage	Check the voltage.
	Molded case circuit breaker is locked, e.g. by cylinder lock in the motor operator	Unlock the circuit breaker.
	Molded case circuit breaker cannot be switched on or off via the communication interface if the write protection slide switch on the COM800 is set to OFF	Check the position of the write protection slide switch on the COM800.

See also

Technical Support (Page 10)

6 Technical specifications

6.1 Circuit diagrams

6.1.1 3VA1 molded case circuit breakers

6.1.1.1 Basic units

Switch disconnectors

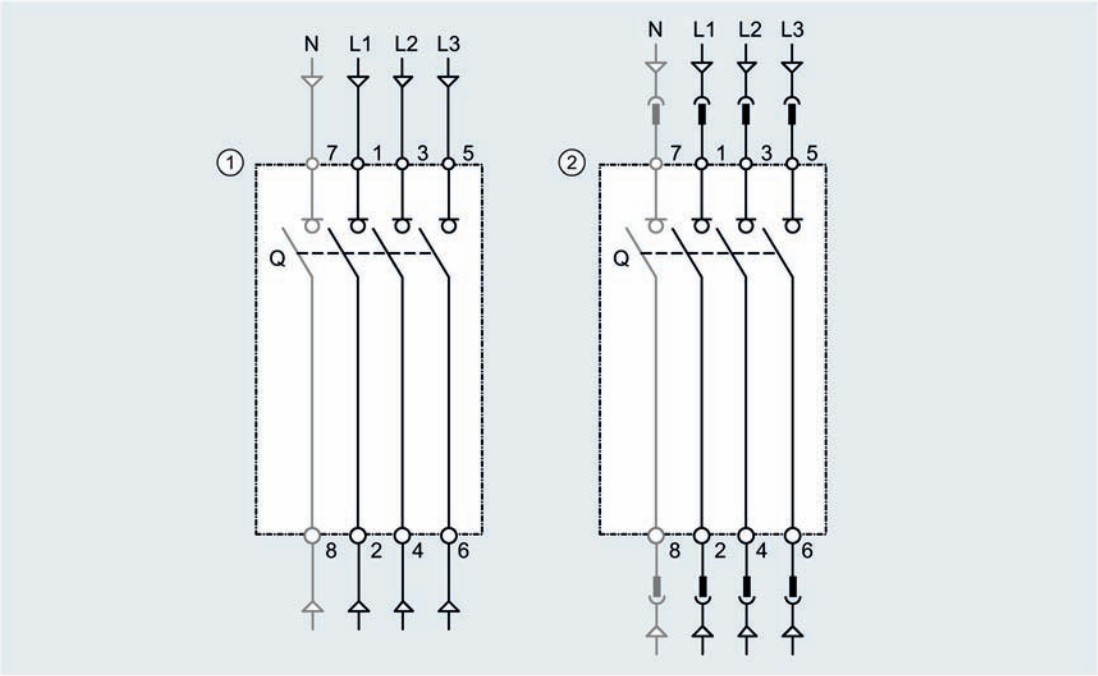

① Fixed mounting, 3-pole and 4-pole

② Plug-in/draw-out units, 3-pole and 4-pole

3VA1 molded case circuit breakers with thermal-magnetic trip unit

Fixed mounting and plug-in/draw-out units, 3-pole and 4-pole

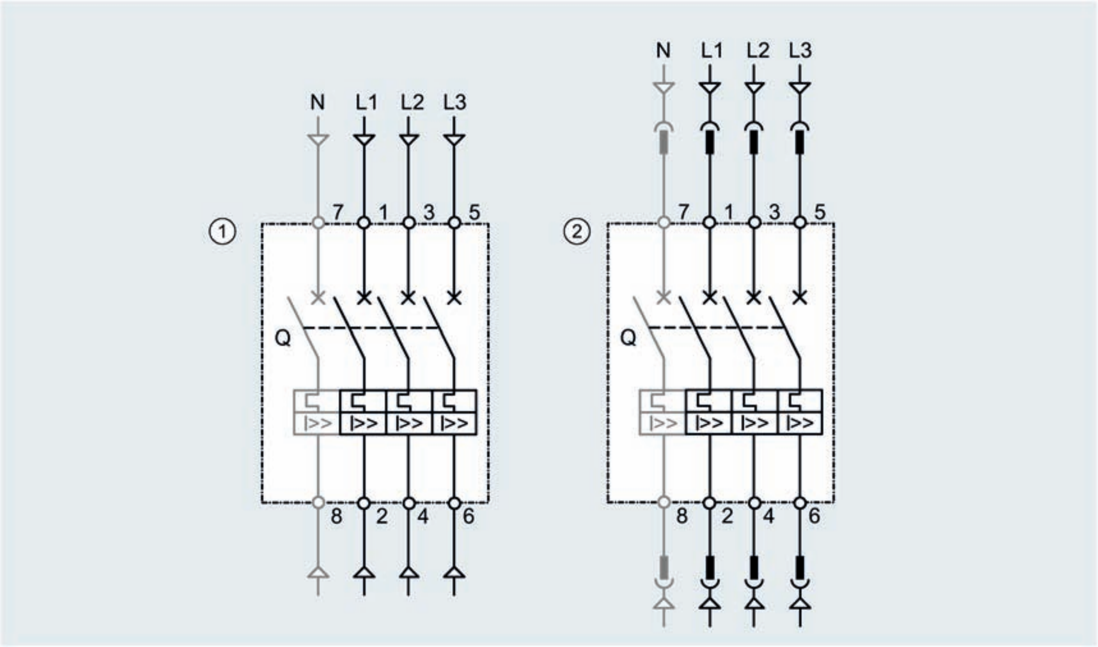

① Fixed mounting, 3-pole and 4-pole

② Plug-in/draw-out units, 3-pole and 4-pole

Fixed mounting and plug-in/draw-out units, 4-pole, unprotected N conductor

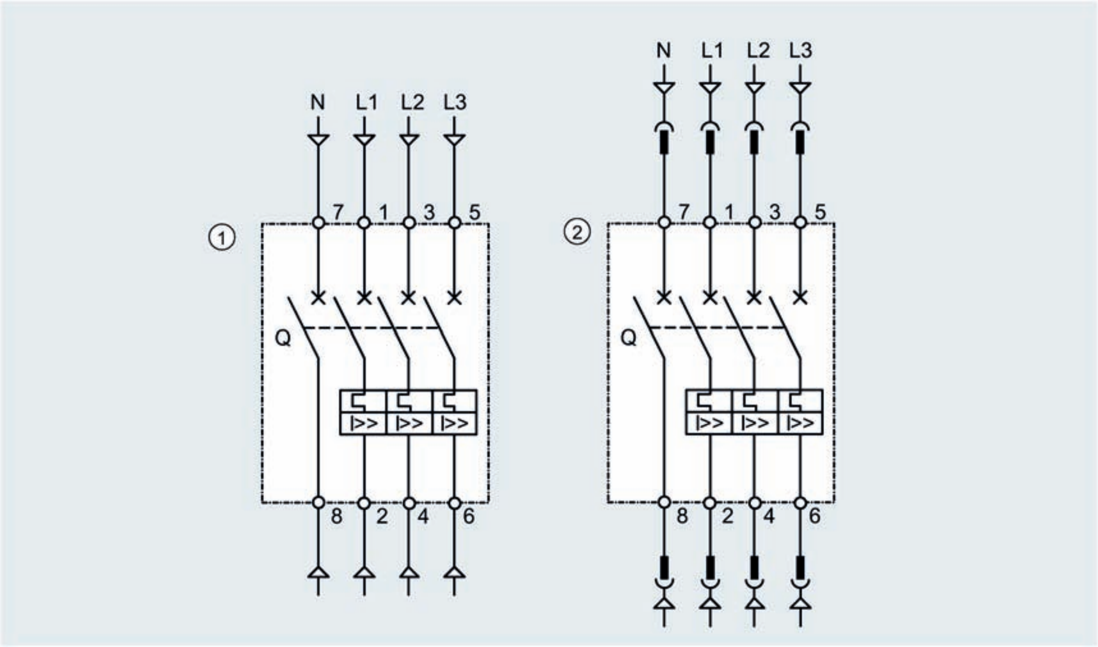

① Fixed mounting, 4-pole, unprotected N conductor
② Plug-in and draw-out units, 4-pole, unprotected N conductor

6.1.1.2 Accessories

Auxiliary switches, alarm switches and position signaling contacts

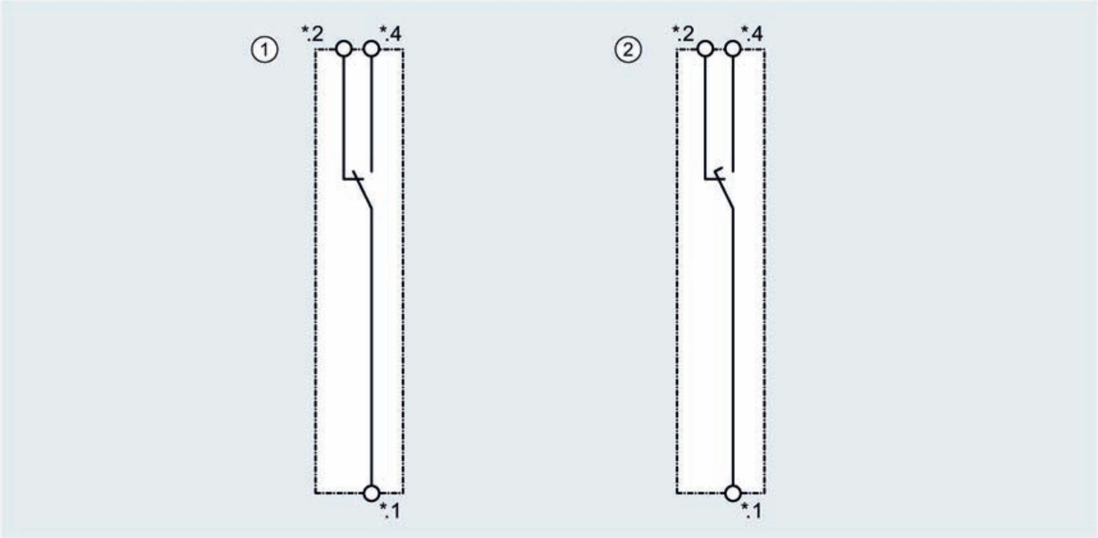

① Changeover contacts for auxiliary switches AUX, trip alarm switches TAS and electrical alarm switches EAS, position signaling switches for plug-in and draw-out units

② Leading changeover contacts for leading changeover switch LCS

Auxiliary releases

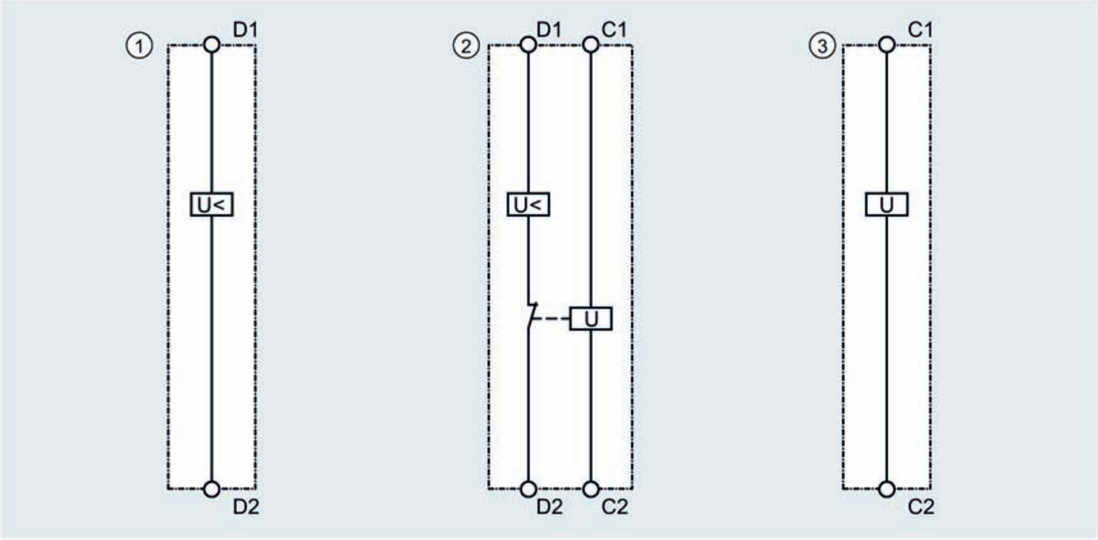

① Undervoltage release UVR

② Universal release UNI

③ Shunt trip

Motor operators

MO310 side mounted motor operator and MO320 front mounted motor operator

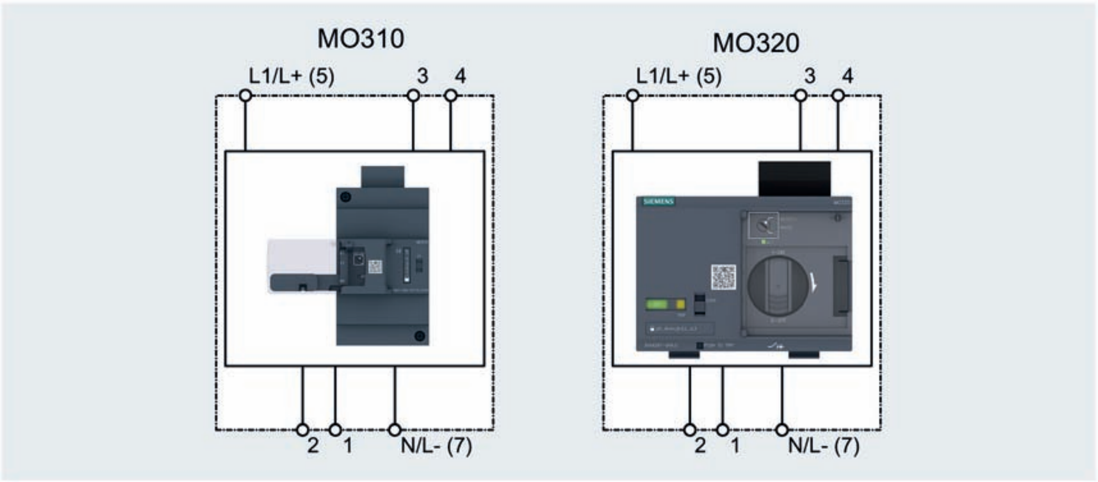

MO310 / MO320 motor operator actuation controlled via control cable

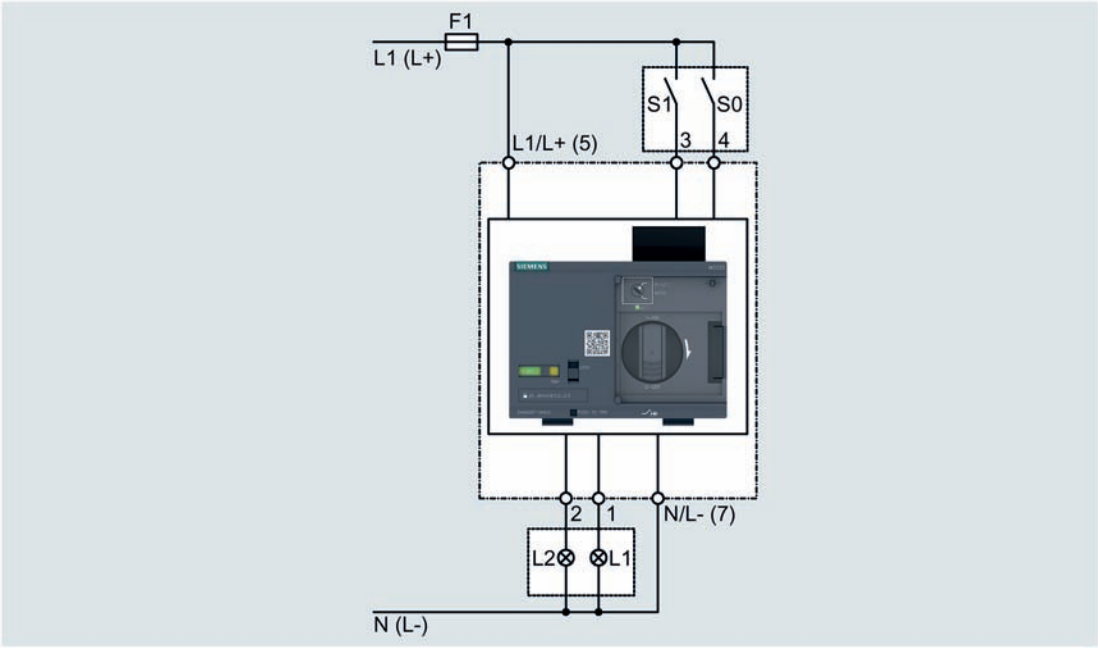

S0	OFF (to be provided by customer)
S1	ON (to be provided by customer)
F1	Fuse in the control circuit (to be provided by customer)
L1	Indicator light AUTO mode (to be provided by customer)
L2	Indicator light MAN mode (to be provided by customer)

MO310 / MO320 motor operator actuation controlled via control cable and undervoltage release

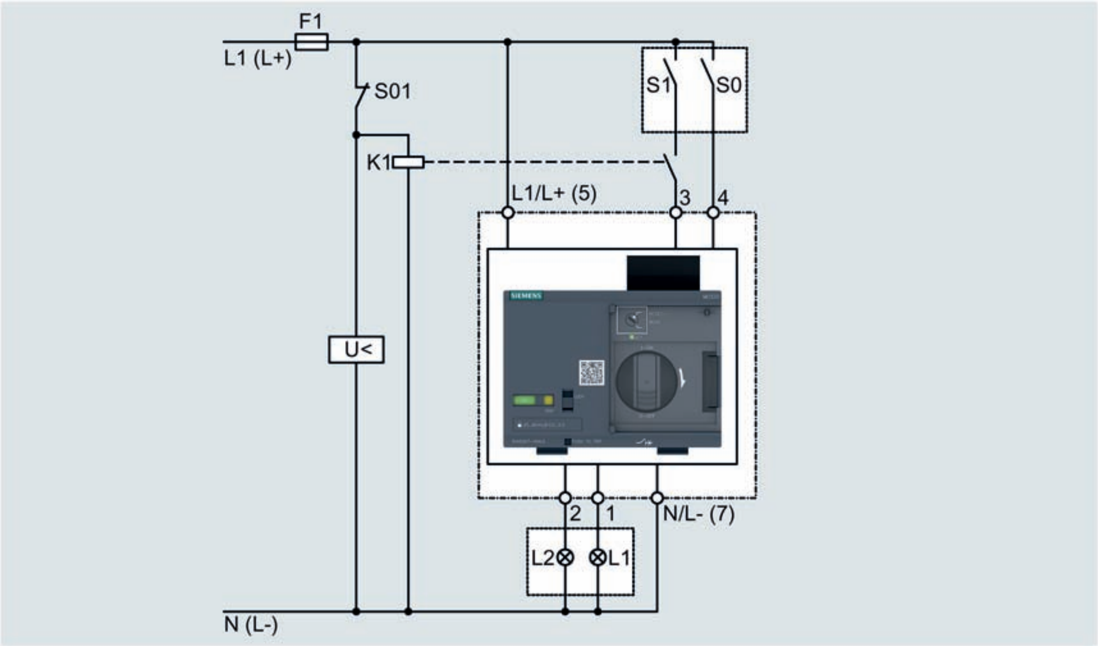

S0	OFF (to be provided by customer)
S1	ON (to be provided by customer)
S01	Remote command (to be provided by customer)
K1	Contactor relay (to be provided by customer)
U<	Undervoltage release (to be provided by customer)
F1	Fuse in the control circuit (to be provided by customer)
L1	Indicator light AUTO mode (to be provided by customer)
L2	Indicator light MAN mode (to be provided by customer)

This circuit is deployed in order to prevent no-load operation of the molded case circuit breaker. The contact of auxiliary contactor K1 prevents no-load operation when the undervoltage release "U<" is de-energized.

No-load operations subject the molded case circuit breaker to high stresses. If the undervoltage release is de-energized, auxiliary contactor K1 has not picked up. The contact in the ON circuit (control circuit) of the motor operator is thus not closed, i.e. the molded case circuit breaker cannot be switched.

This auxiliary contactor is not necessary when the undervoltage release is supplied uninterrupted (e.g. pushbutton S01) from the same source as the motor operator itself (e.g. contact 3).

Plug-in and draw-out units

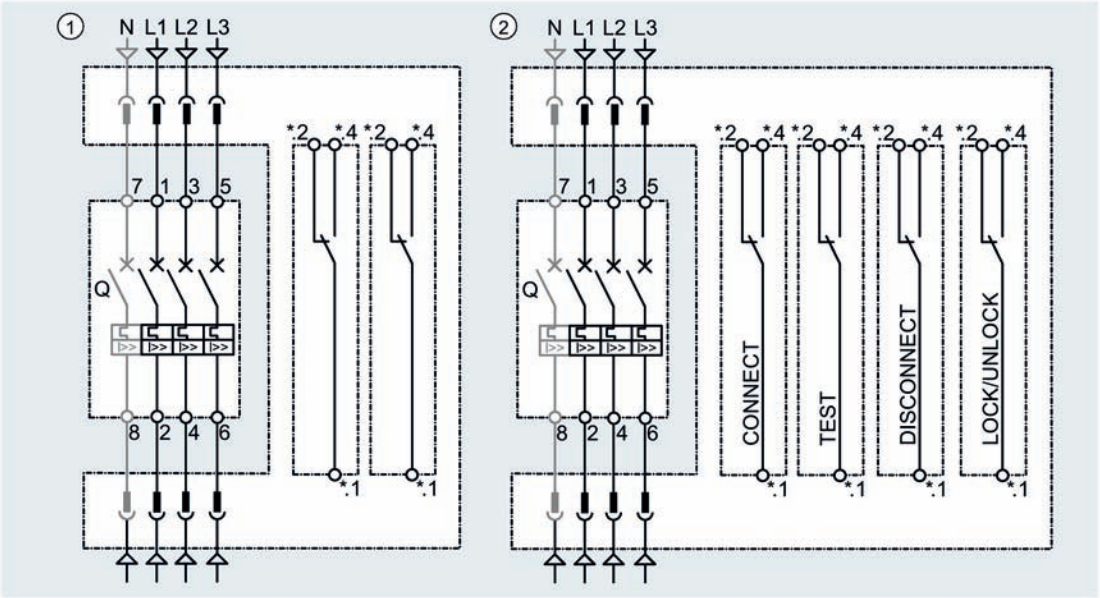

① Plug-in units, 3-pole and 4-pole, with two optionally integrated position signaling switches for signaling "Plug-in unit - MCCB correctly bolted to plug-in socket".

② Draw-out units, 3-pole and 4-pole, with an optional switch for signaling the condition "Draw-out unit locked / open" and six optionally integrated position signaling switches for signaling "Position of breaker in the draw-out unit".

RCD Basic

Type A

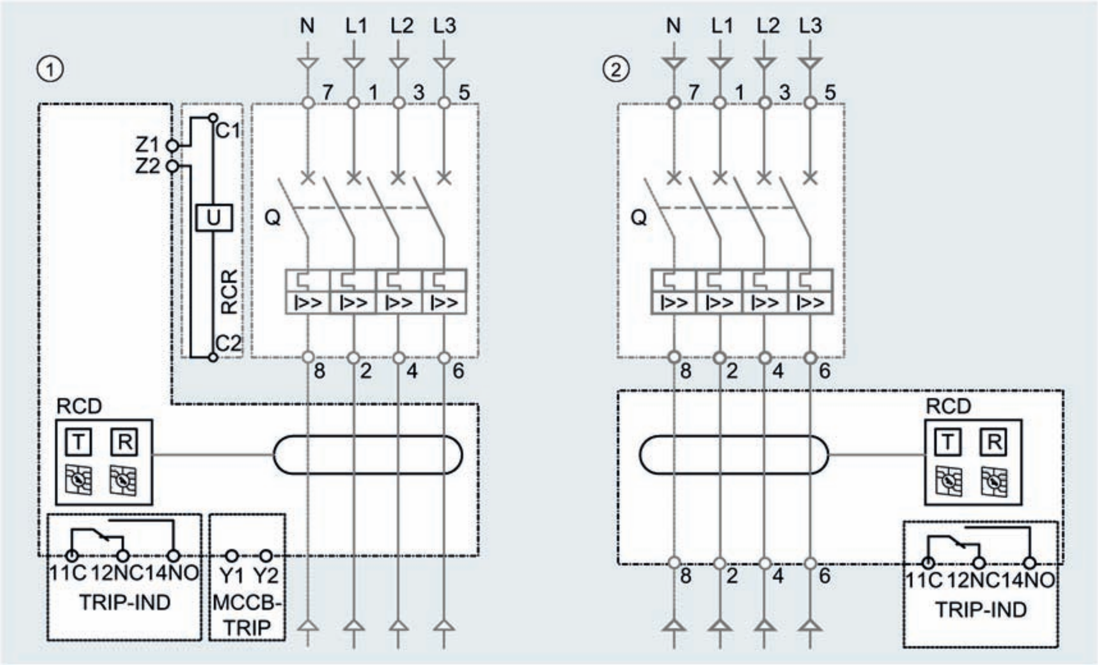

① Side mounted RCD Basic, 3-pole and 4-pole

② Loadside RCD Basic, 3-pole and 4-pole

Type B

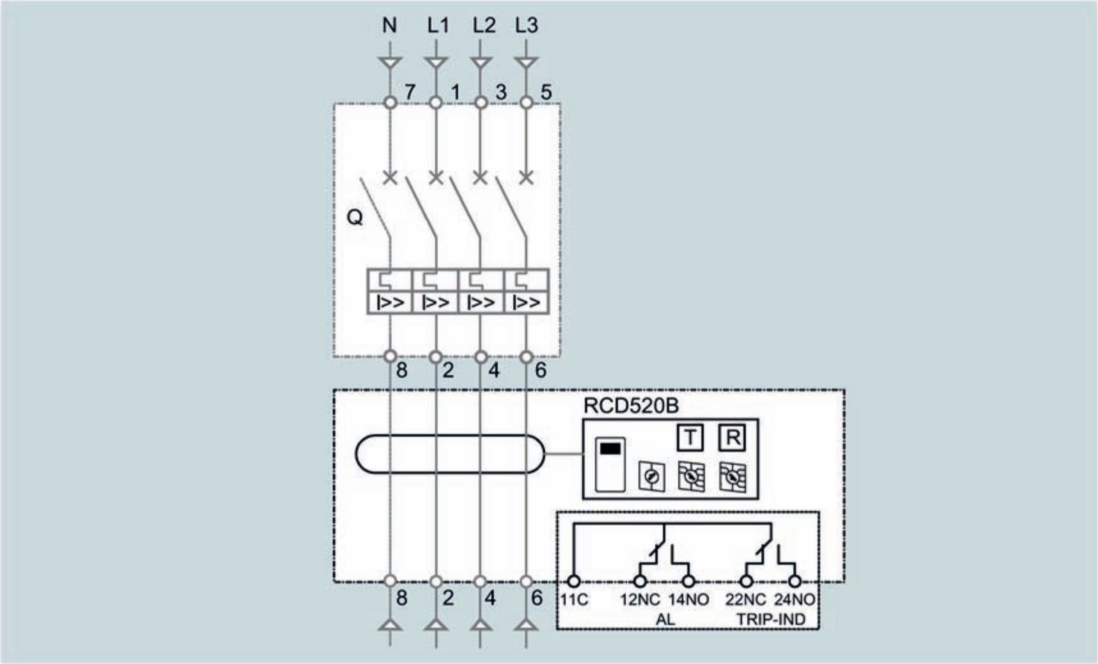

Loadside Basic residual current device, 3-pole (in 4-pole enclosure) and 4-pole

6.1.1.3 Example: 3VA1 molded case circuit breaker with built-on/built-in accessories

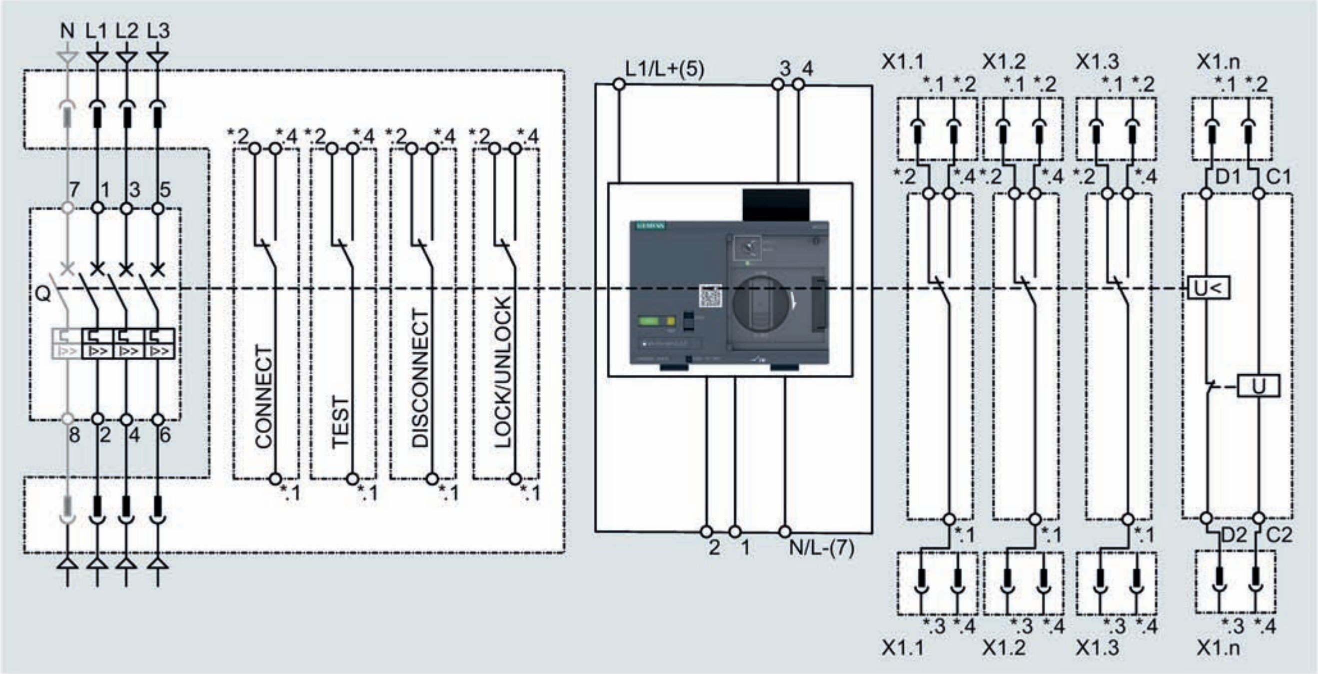

6.1.2 3VA2 molded case circuit breakers

6.1.2.1 Basic units

Fixed mounting and plug-in/draw-out units, 3-pole and 4-pole

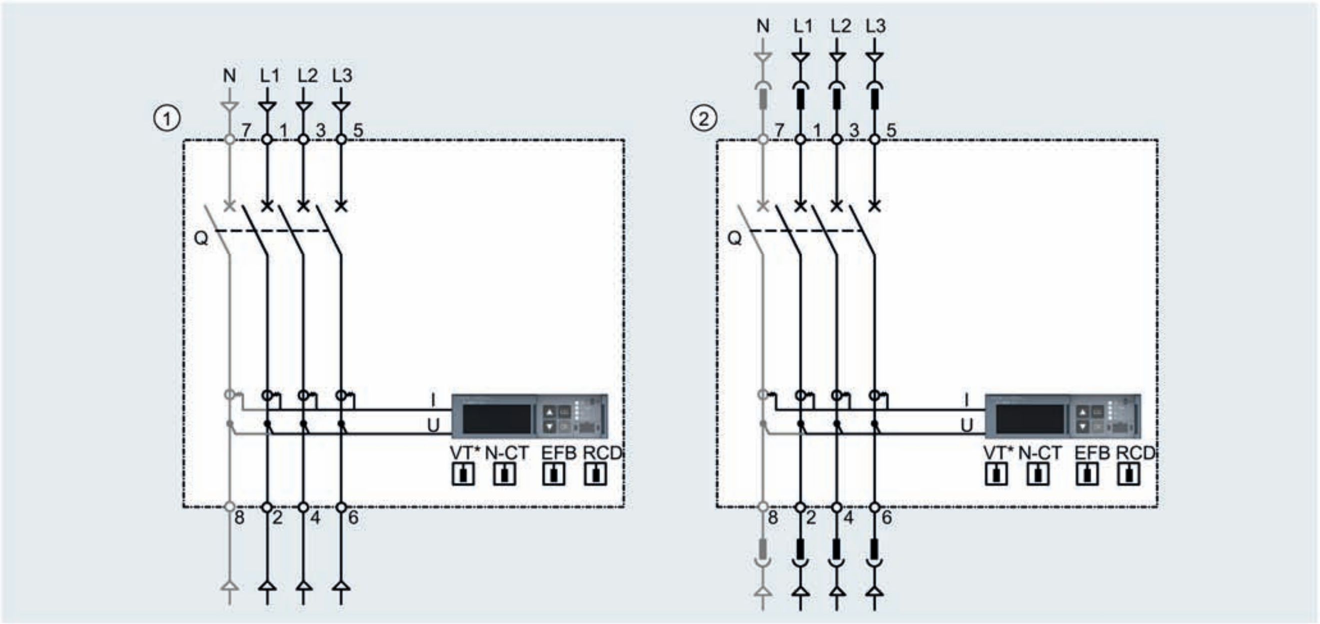

① Fixed mounting, 3-pole and 4-pole

② Plug-in/draw-out units, 3-pole and 4-pole

* Voltage tap

Fixed mounting, 3-pole 3VA2 molded case circuit breaker in 5-wire system

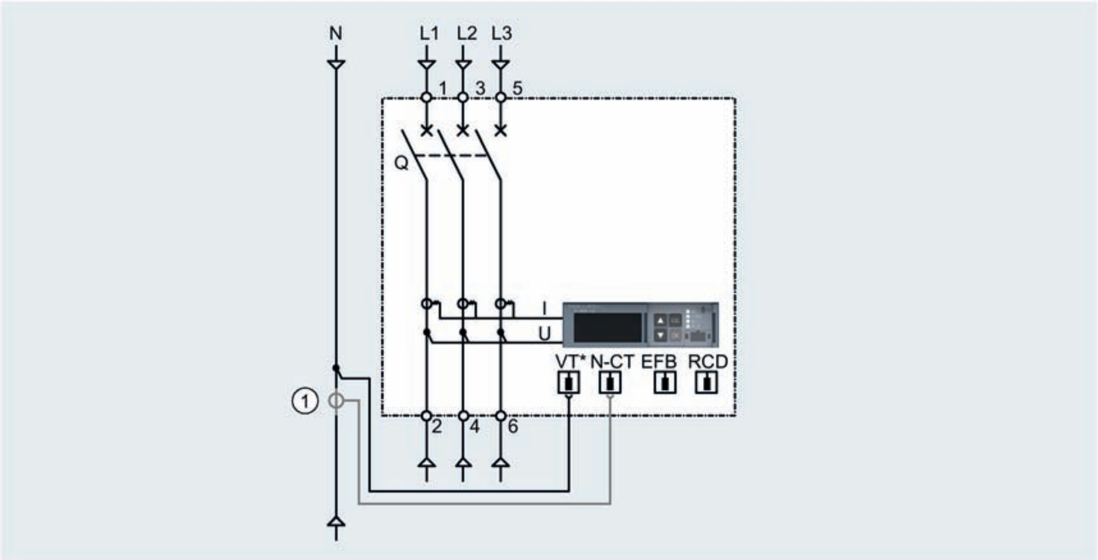

① Optional external current transformer for N conductor (gray line)

* Voltage tap

6.1.2.2 Accessories

Auxiliary switches, alarm switches and position signaling contacts

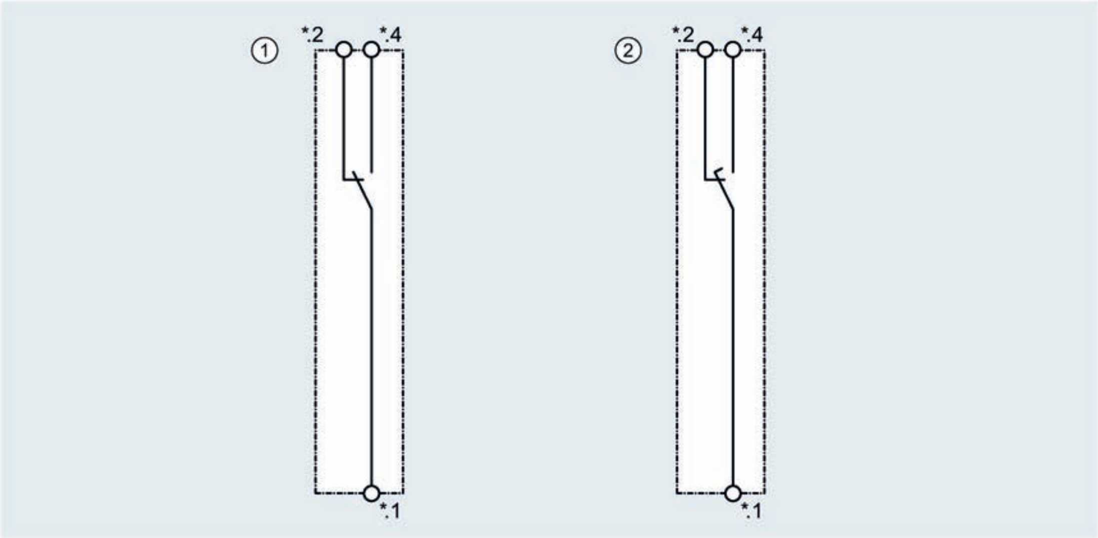

① Changeover contacts for auxiliary switches AUX, trip alarm switches TAS and electrical alarm switches EAS, position signaling switches for plug-in and draw-out units

② Leading changeover contacts for leading changeover switch LCS

Auxiliary releases

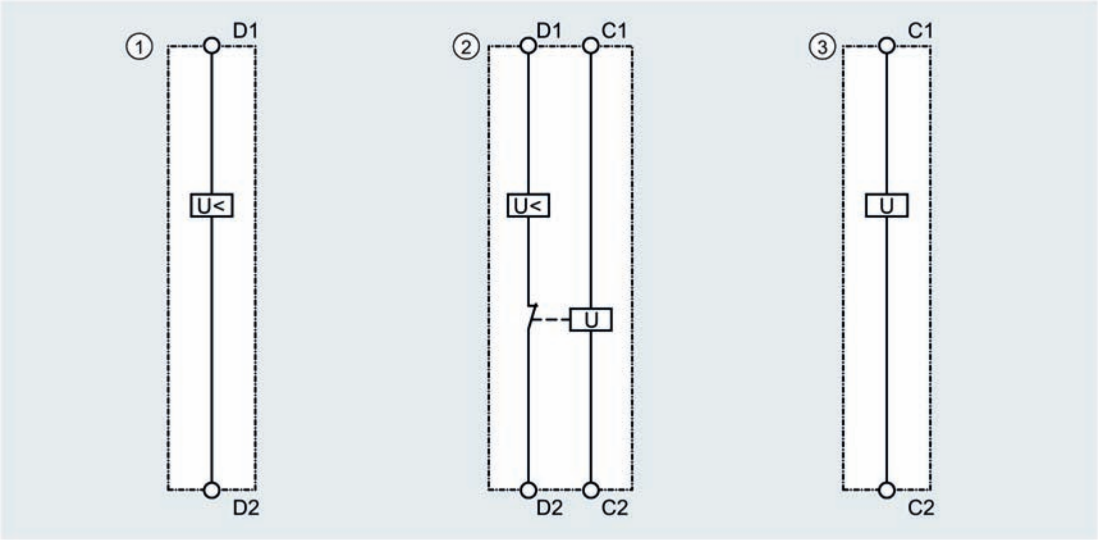

① Undervoltage release UVR

② Universal release UNI

③ Shunt trip

Other internal accessories

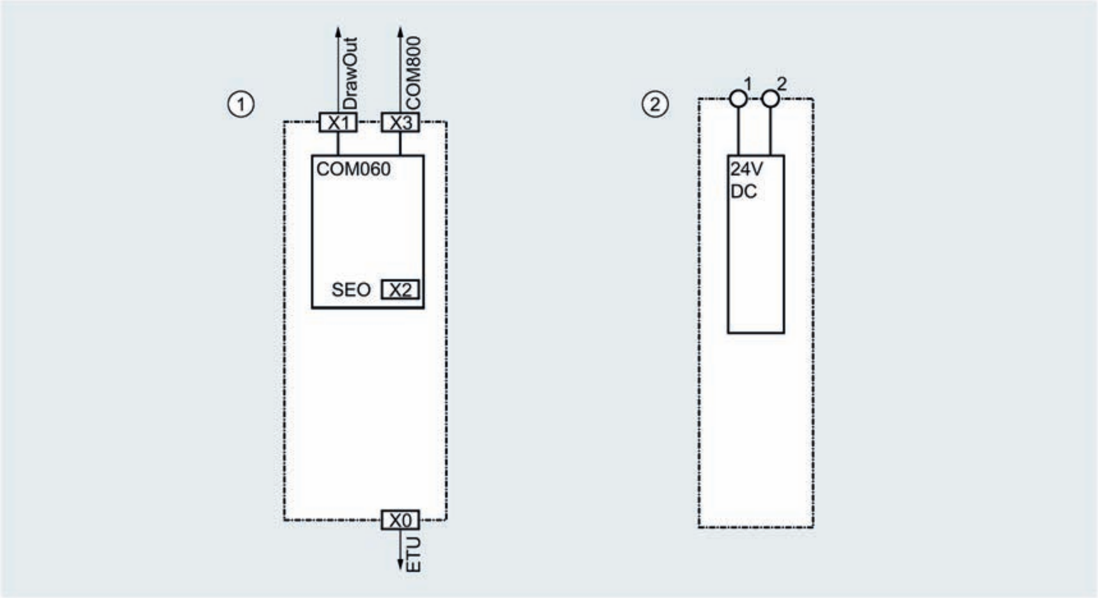

① COM060 communication module

② 24 V module

Motor operators

MO320 front mounted motor operator

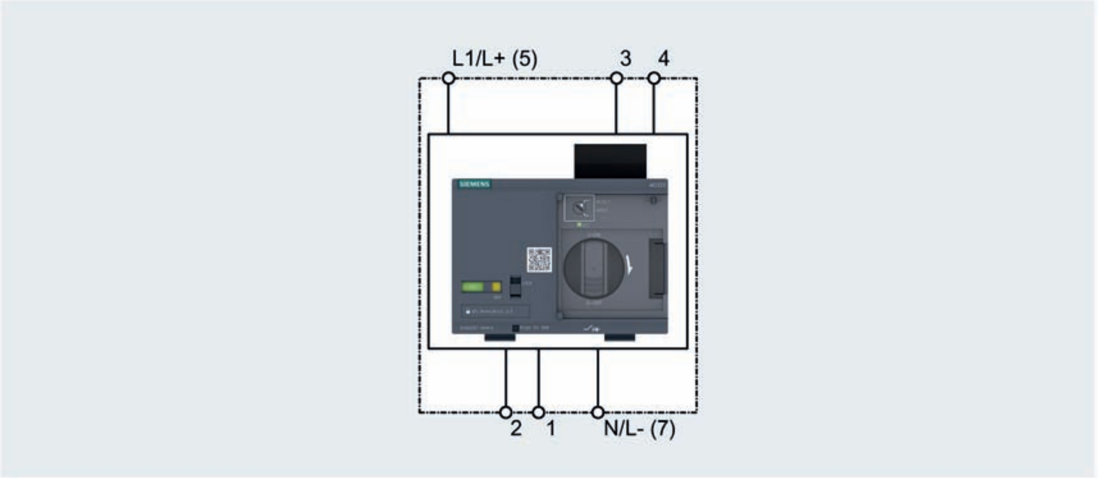

MO320 motor operator actuation controlled via control cable

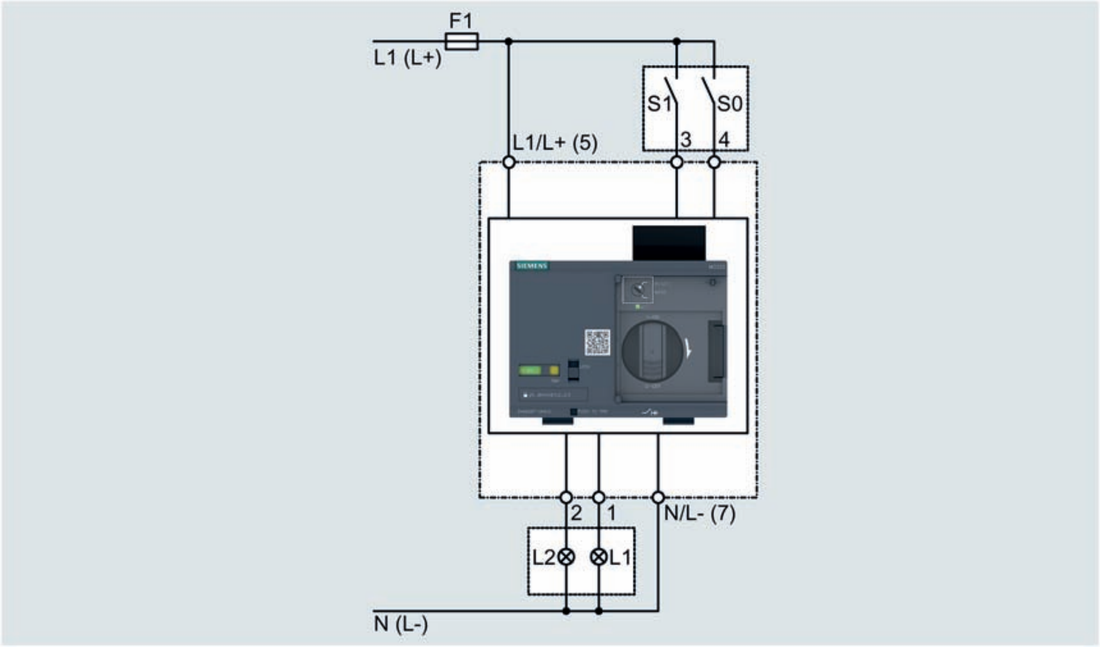

S0	OFF (to be provided by customer)
S1	ON (to be provided by customer)
F1	Fuse in the control circuit (to be provided by customer)
L1	Indicator light AUTO mode (to be provided by customer)
L2	Indicator light MAN mode (to be provided by customer)

MO320 motor operator actuation controlled via control cable and undervoltage release

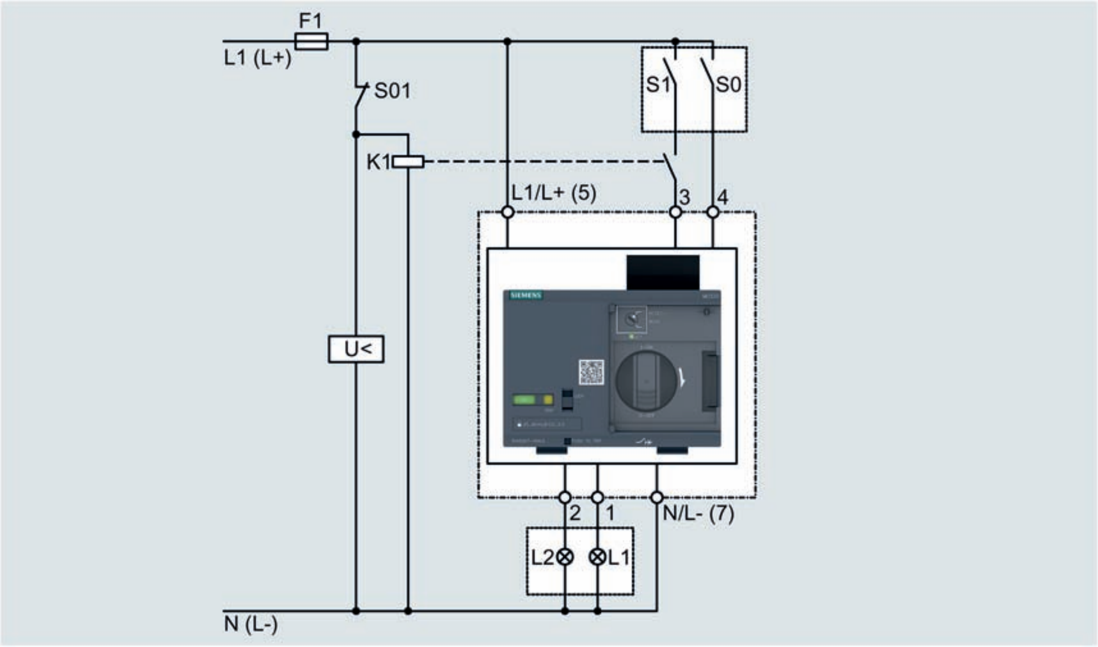

S0	OFF (to be provided by customer)
S1	ON (to be provided by customer)
S01	Remote command (to be provided by customer)
K1	Contactor relay (to be provided by customer)
U<	Undervoltage release (to be provided by customer)
F1	Fuse in the control circuit (to be provided by customer)
L1	Indicator light AUTO mode (to be provided by customer)
L2	Indicator light MAN mode (to be provided by customer)

This circuit is deployed in order to prevent no-load operation of the molded case circuit breaker. The contact of auxiliary contactor K1 prevents no-load operation when the undervoltage release "U<" is de-energized.

No-load operations subject the molded case circuit breaker to high stresses. If the undervoltage release is de-energized, auxiliary contactor K1 has not picked up. The contact in the ON circuit (control circuit) of the motor operator is thus not closed, i.e. the molded case circuit breaker cannot be switched.

This auxiliary contactor is not necessary when the undervoltage release is supplied uninterrupted (e.g. pushbutton S01) from the same source as the motor operator itself (e.g. contact 3).

SEO520 motor operator with stored energy operator

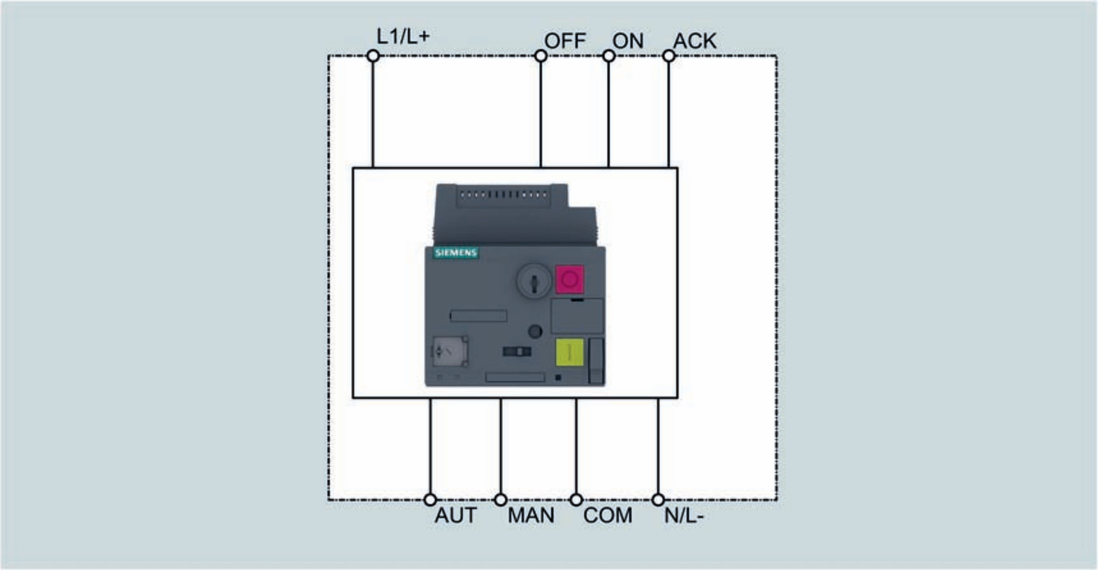

Actuation of SEO520 motor operator with stored energy operator controlled via control cable

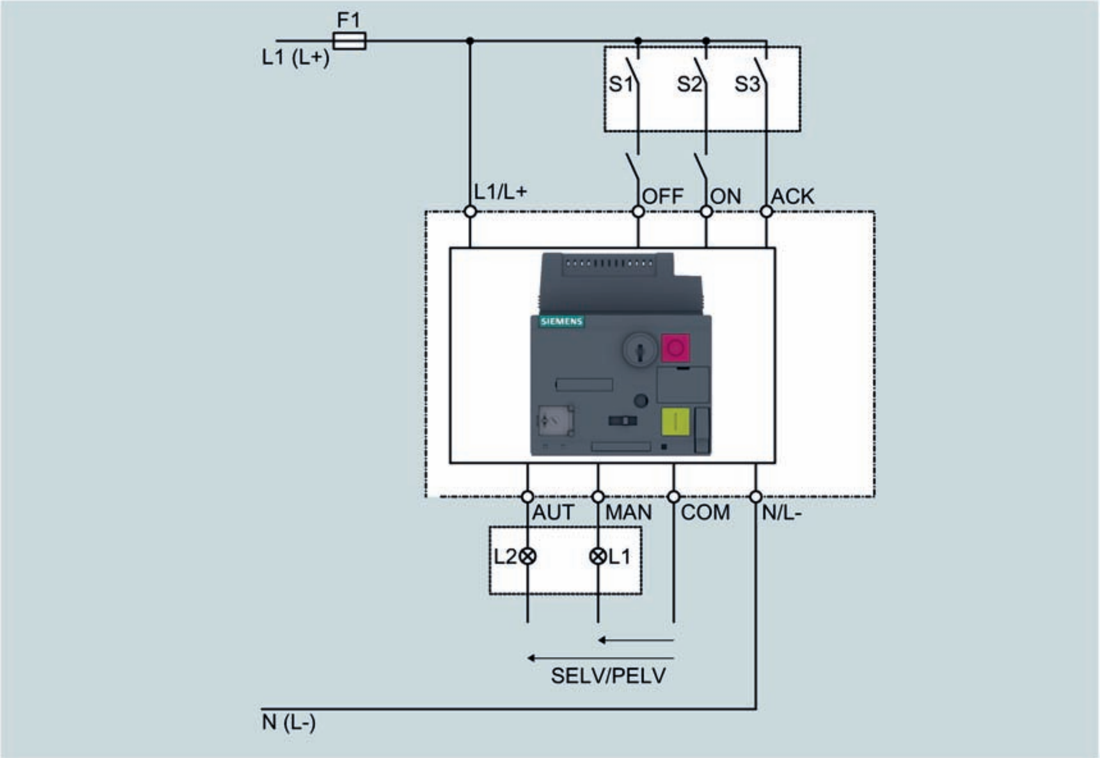

S1	OFF (to be provided by customer)
S2	ON (to be provided by customer)
S3	Reset signal for operating mode 3 (to be provided by customer)
F1	Fuse in the control circuit (to be provided by customer)
L1	Indicator light AUTO mode (to be provided by customer)
L2	Indicator light MAN mode (to be provided by customer)

Actuation of SEO520 motor operator with stored energy operator controlled via control cable and undervoltage release

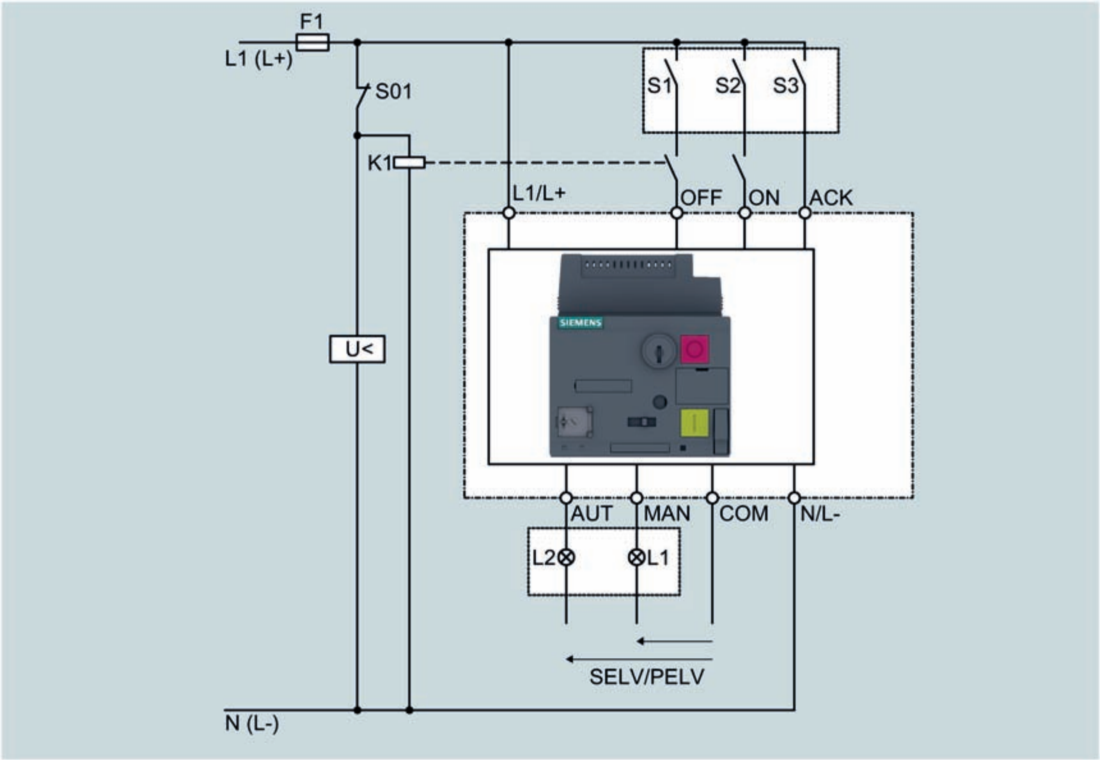

S1	OFF (to be provided by customer)
S2	ON (to be provided by customer)
S3	Reset signal for operating mode 3 (to be provided by customer)
S01	Remote command (to be provided by customer)
K1	Contactor relay (to be provided by customer)
U<	Undervoltage release (to be provided by customer)
F1	Fuse in the control circuit (to be provided by customer)
L1	Indicator light AUTO mode (to be provided by customer)
L2	Indicator light MAN mode (to be provided by customer)

Plug-in and draw-out units

Plug-in and draw-out units

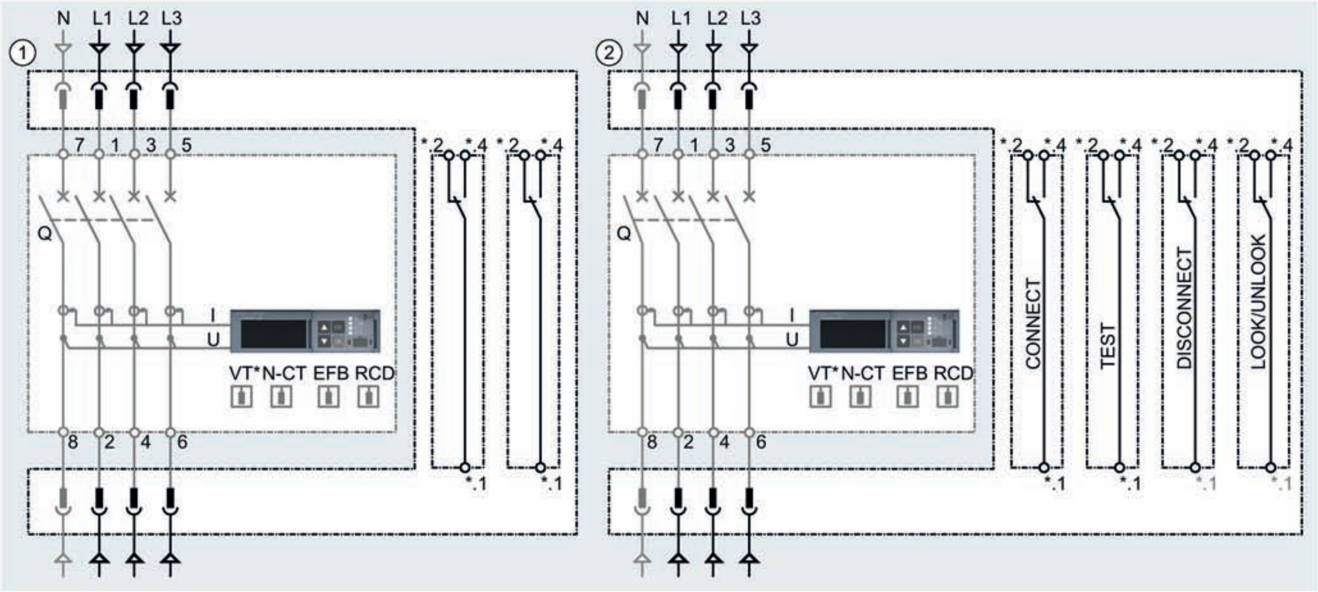

① Plug-in units, 3-pole and 4-pole, with two optionally integrated position signaling switches for signaling "Plug-in unit - MCCB correctly bolted to plug-in socket".

② Draw-out units, 3-pole and 4-pole, with an optional switch for signaling the condition "Draw-out unit locked / open" and six optionally integrated position signaling switches for signaling "Position of breaker in the draw-out unit".

* Voltage tap

Draw-out units with communication interface

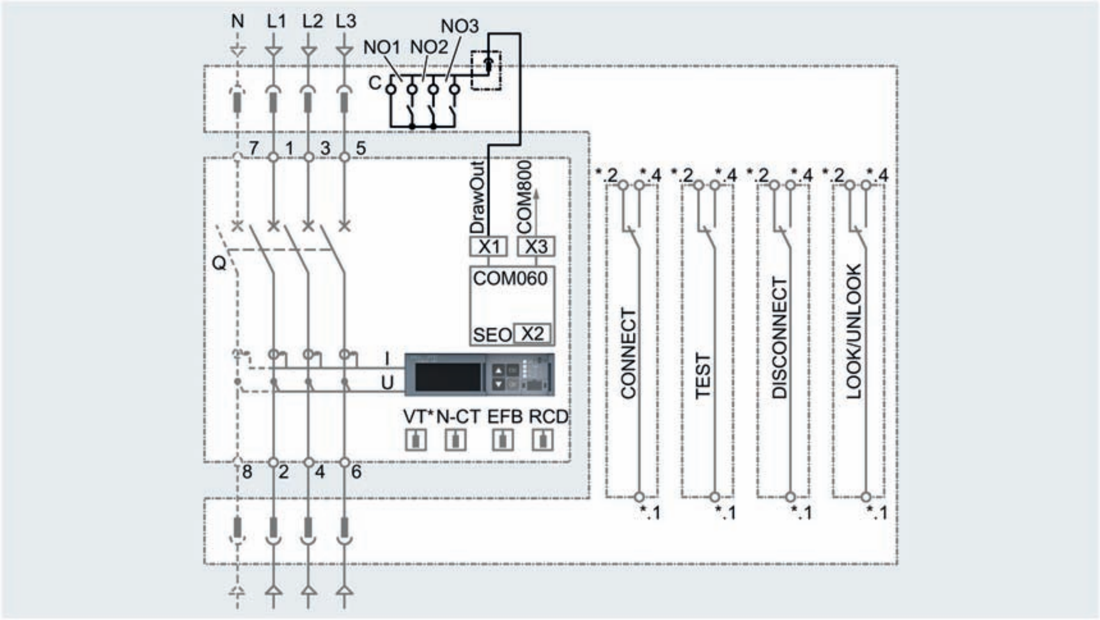

* Voltage tap

Draw-out units, 3-pole and 4-pole, with an optional switch for signaling the condition "Draw-out unit locked / open" and three optionally integrated position signaling switches for signaling "Position of breaker in the draw-out unit".

RCD Advanced

Loadside RCD, 3-pole and 4-pole type A

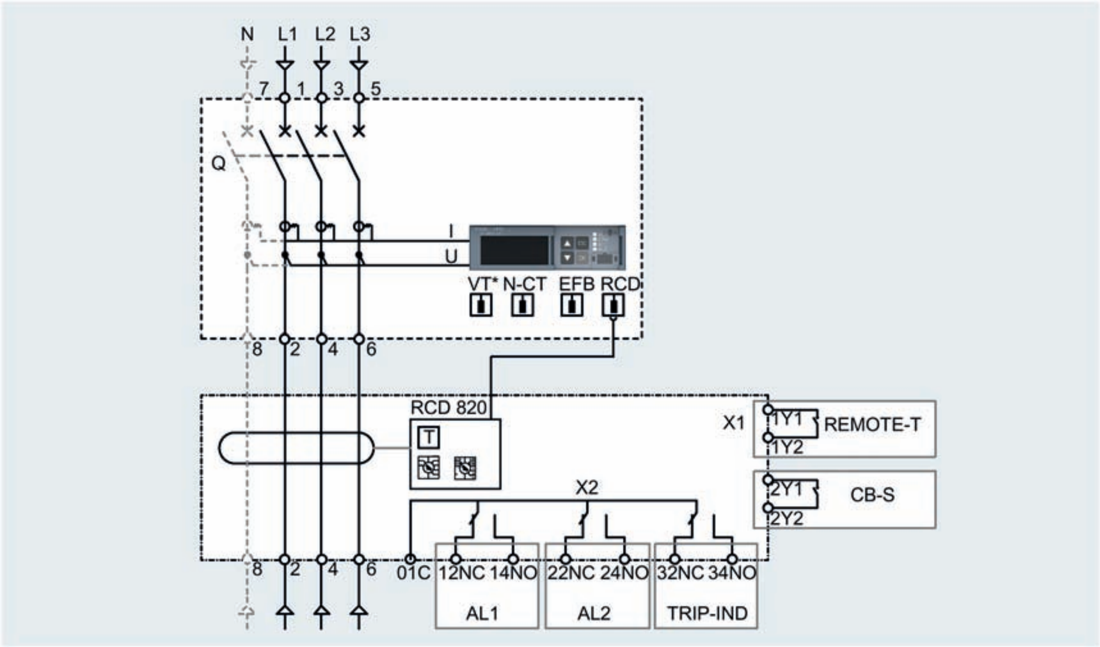

* Voltage tap

Other external accessories

T-connector

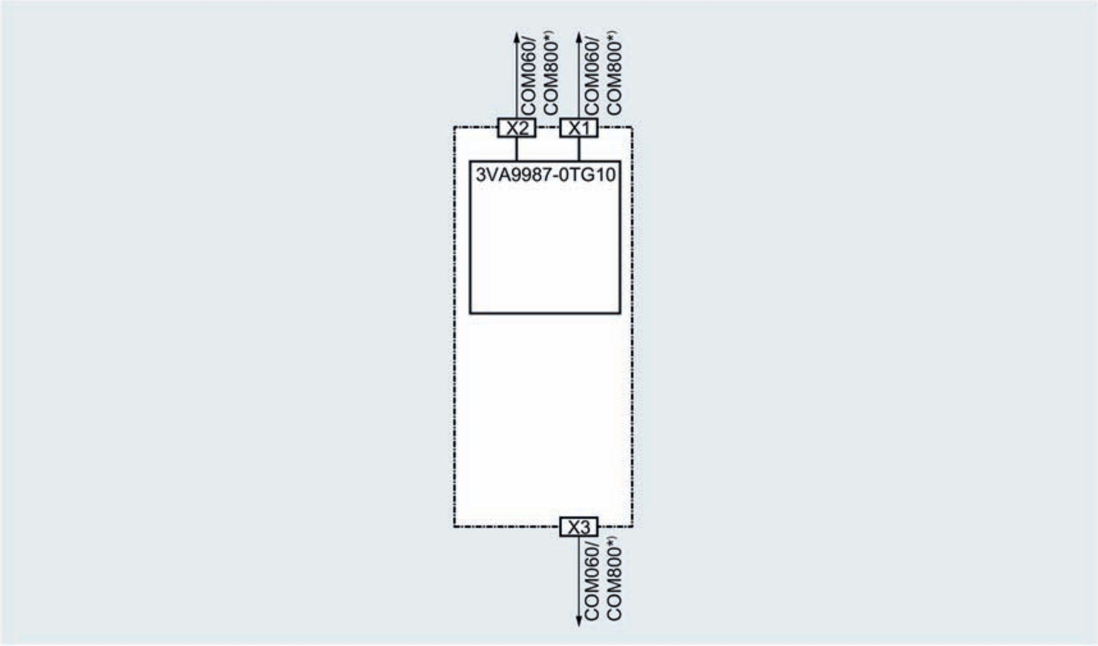

* A connection can also be optionally equipped with a bus terminating resistor.

The T-Connector is included in the scope of supply of the COM060 communication module.

COM800 / COM100 breaker data server

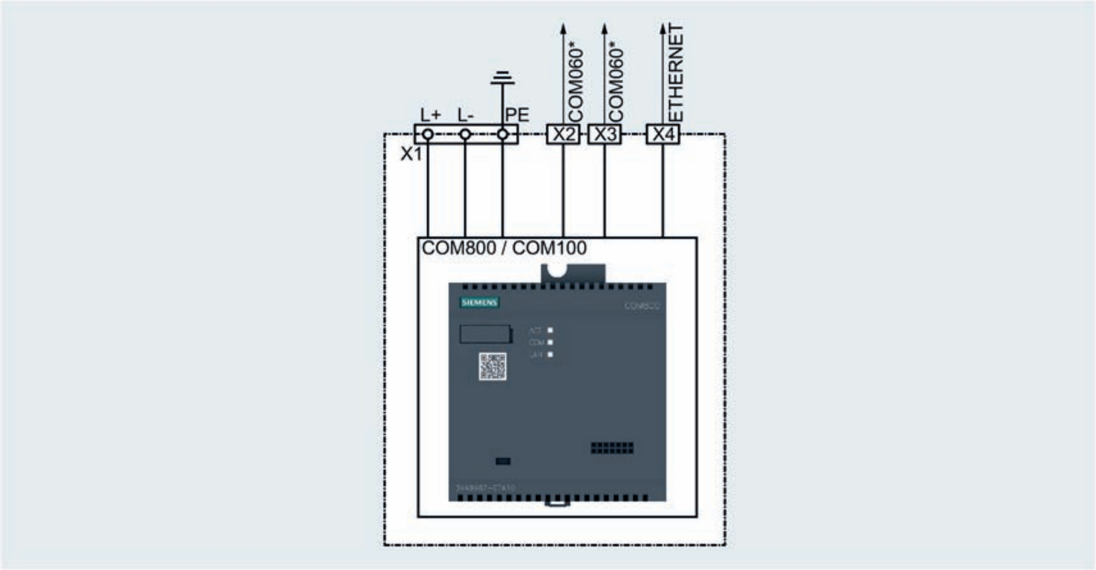

* A connection can also be optionally equipped with a bus terminating resistor.

COM800 / COM100 breaker data server with expansion modules

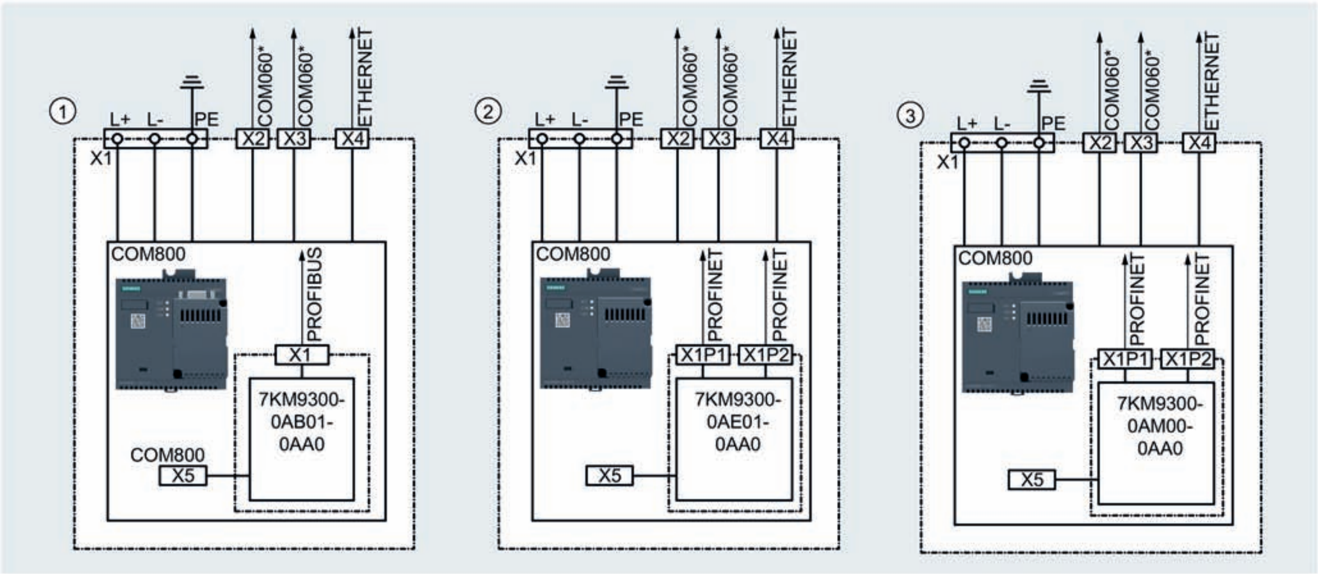

①	COM800 / COM100 breaker data server with 7KM PAC PROFIBUS DP expansion module
②	COM800 / COM100 breaker data server with 7KM PAC Switched Ethernet PROFINET expansion module
③	COM800 / COM100 breaker data server with 7KM PAC RS485 Modbus RTU expansion module
*	A connection can also be optionally equipped with a bus terminating resistor.

EFB300 external function box

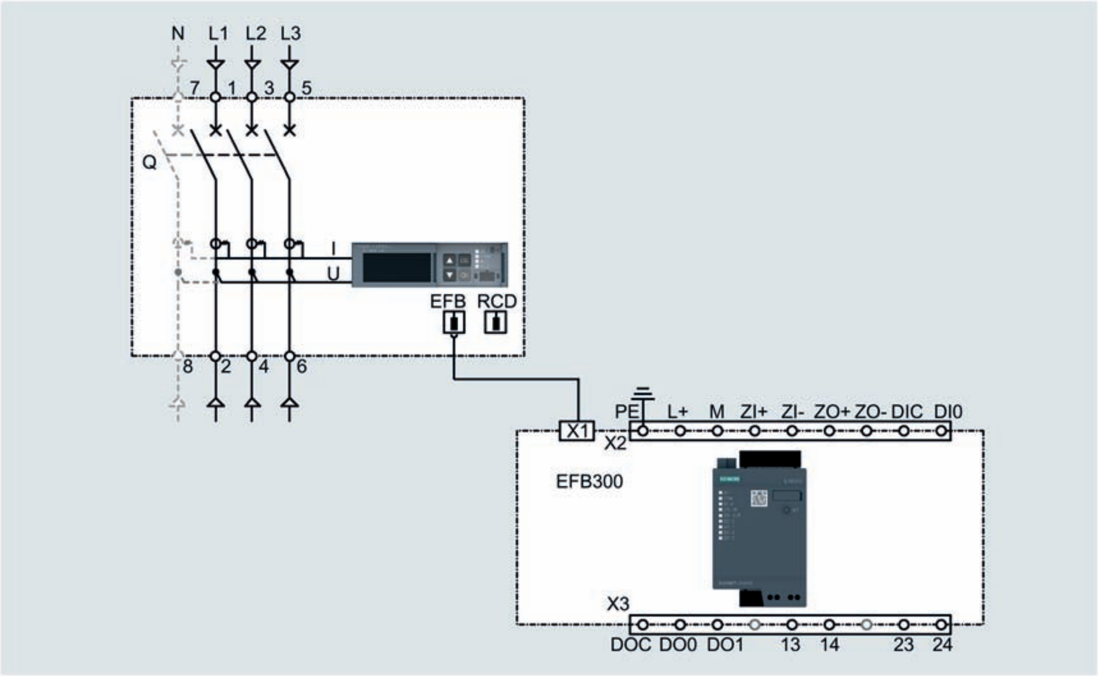

External current transformer for N conductor and illumination kit (24 V DC) for manual handle

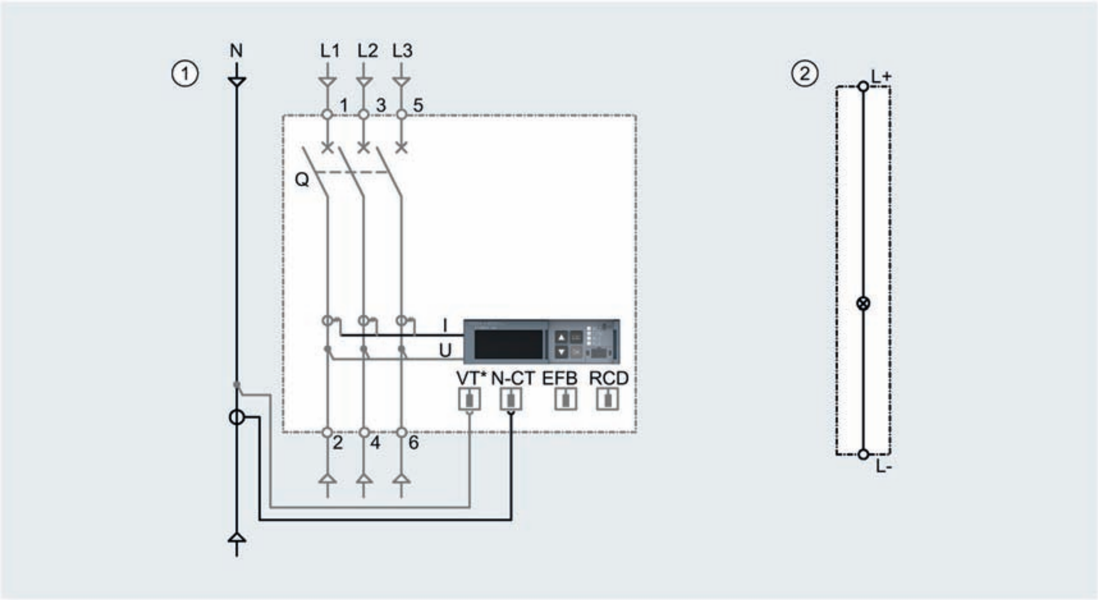

① Connection for external current transformer for N conductor
② Illumination kit (24 V DC) for manual handle
* Voltage tap

Time-delay device for undervoltage releases

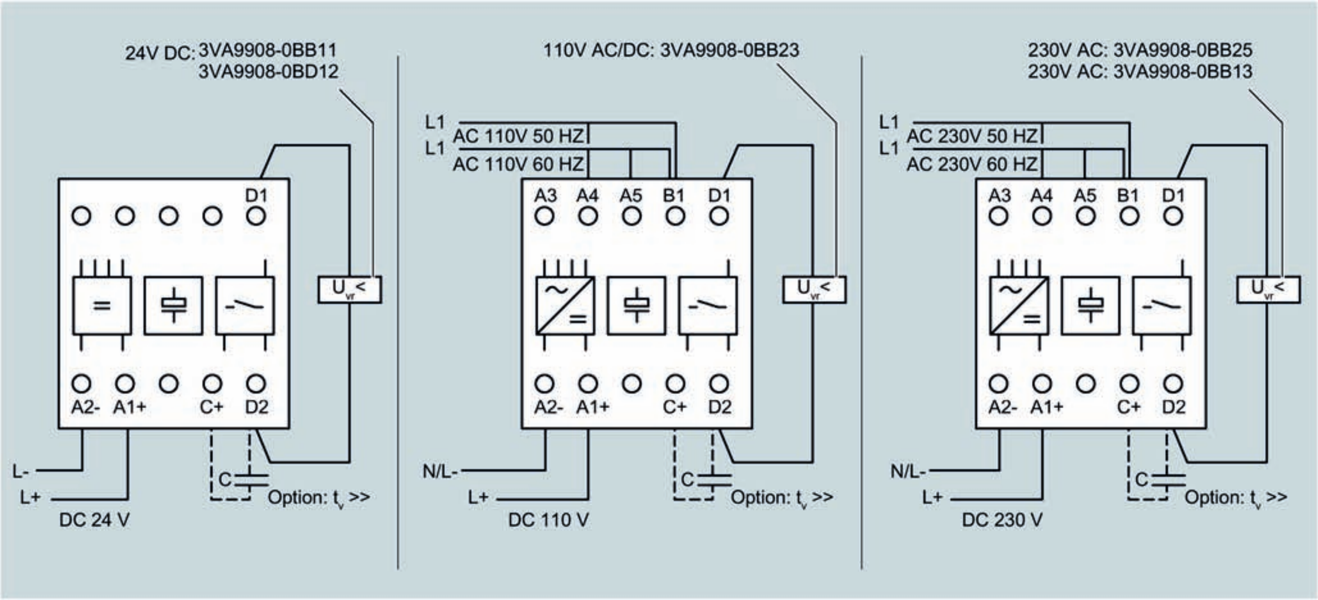

6.1.2.3 Example: 3VA2 molded case circuit breaker with built-on/built-in accessories

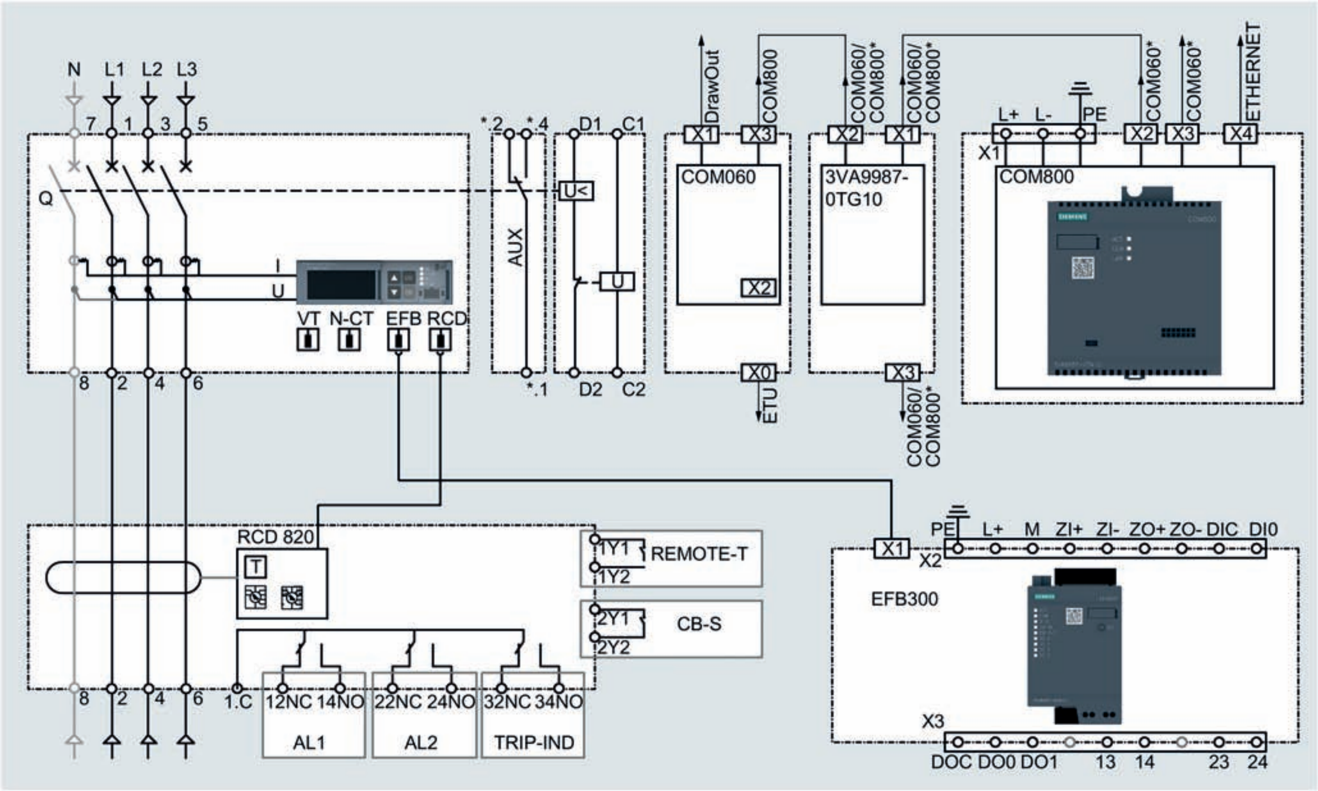

* A connection can also be optionally equipped with a bus terminating resistor.

6.1.3 Application example

Electrical interlocking of two 3VA molded case circuit breakers with undervoltage releases

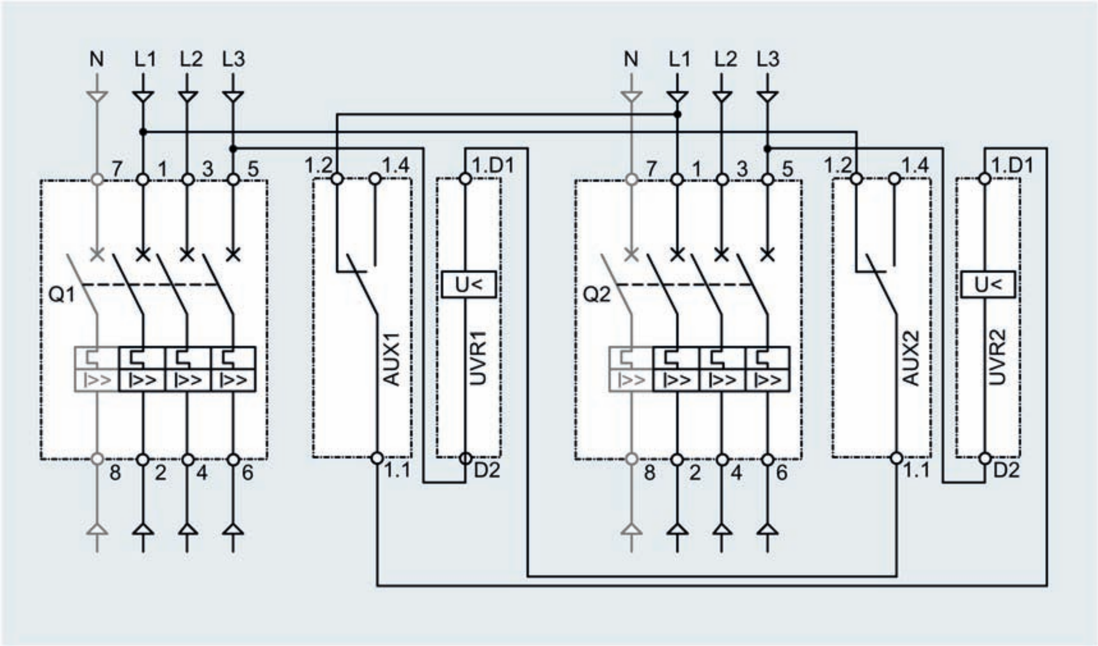

Q 1	Molded case circuit breaker 1
UVR1	Undervoltage release in molded case circuit breaker 1
AUX1	Auxiliary switch in molded case circuit breaker 1
Q2	Molded case circuit breaker 2
UVR2	Undervoltage release in molded case circuit breaker 2
AUX2	Auxiliary switch in molded case circuit breaker 2

Note

The undervoltage release UVR must not be connected to phases L1 and L3 for 690 V AC applications. In this case, it is connected to phase L1 and the N conductor or to a control voltage supply up to maximum 480 V AC.

6.2 Dimensional drawings

6.2.1 Dimensions of basic units

6.2.1.1 3VA10 and 3VA11

3VA11 160 A 1-pole / 2-pole

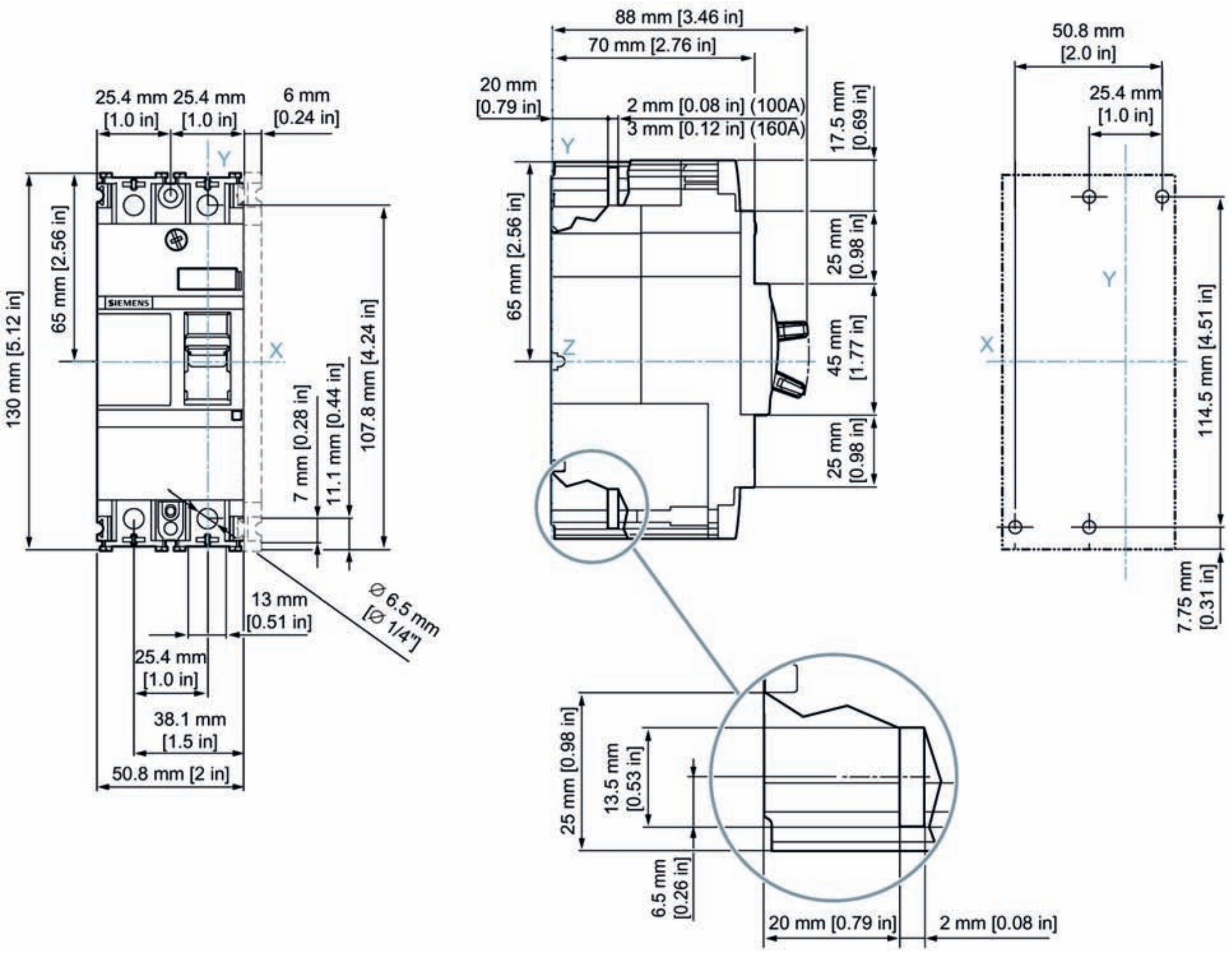

3VA10 100 A / 3VA11 160 A 3-pole / 4-pole

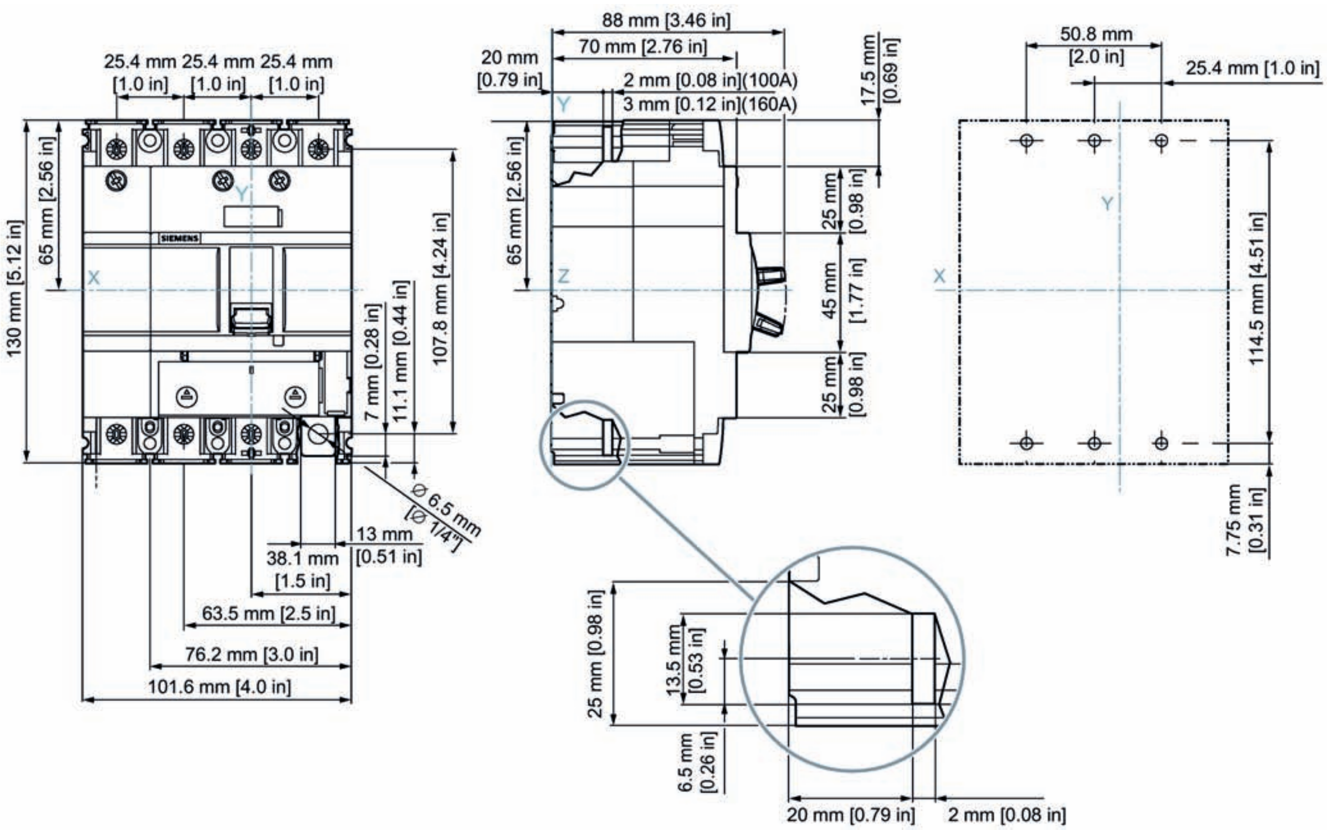

6.2.1.2 3VA12

3VA12 250 A 3-pole / 4-pole

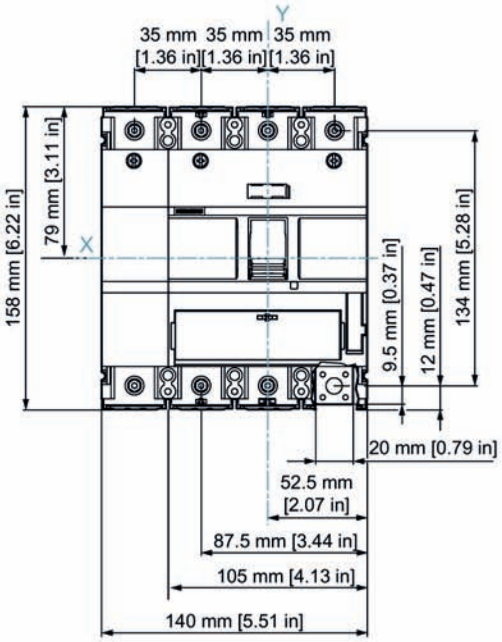

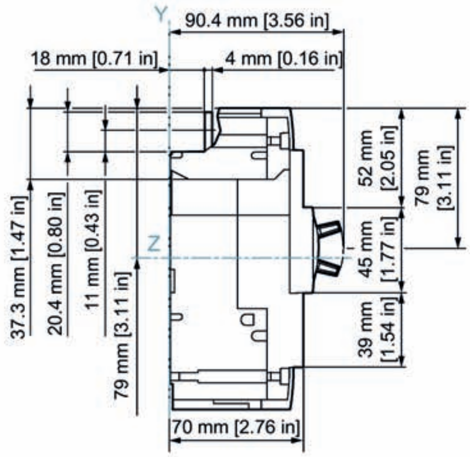

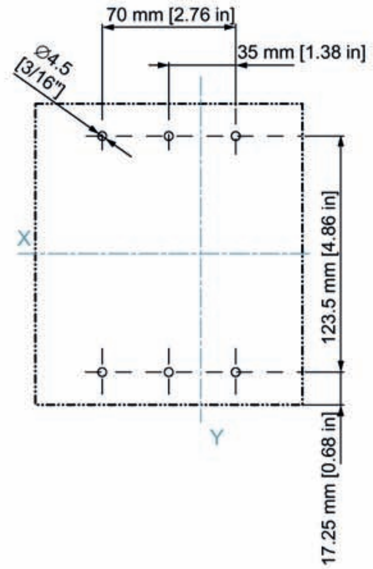

6.2.1.3 3VA13 / 3VA14

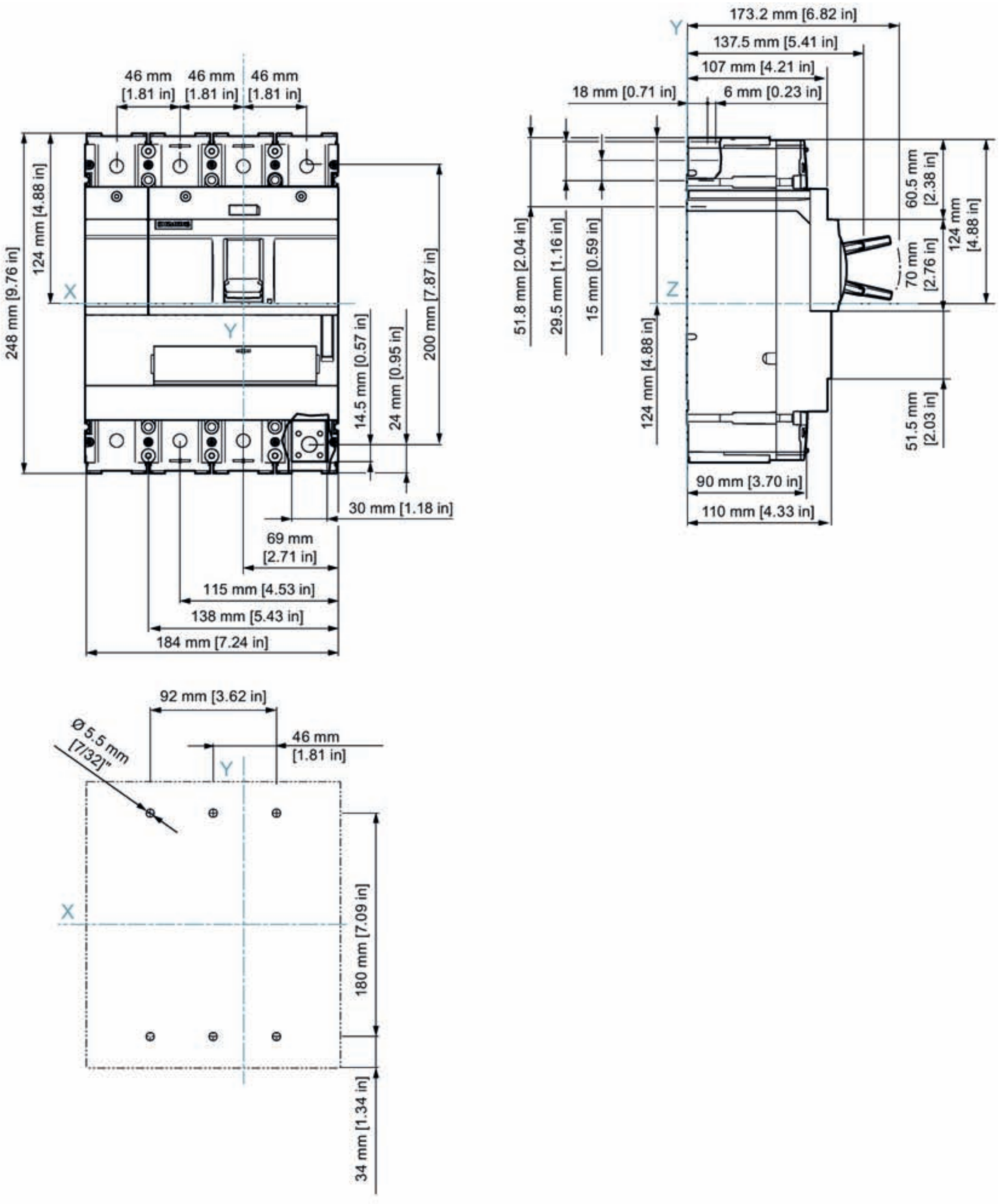

6.2.1.4 3VA20 / 3VA21 / 3VA22

3VA20 100 A / 3VA21 160 A / 3VA22 250 A 3-pole / 4-pole

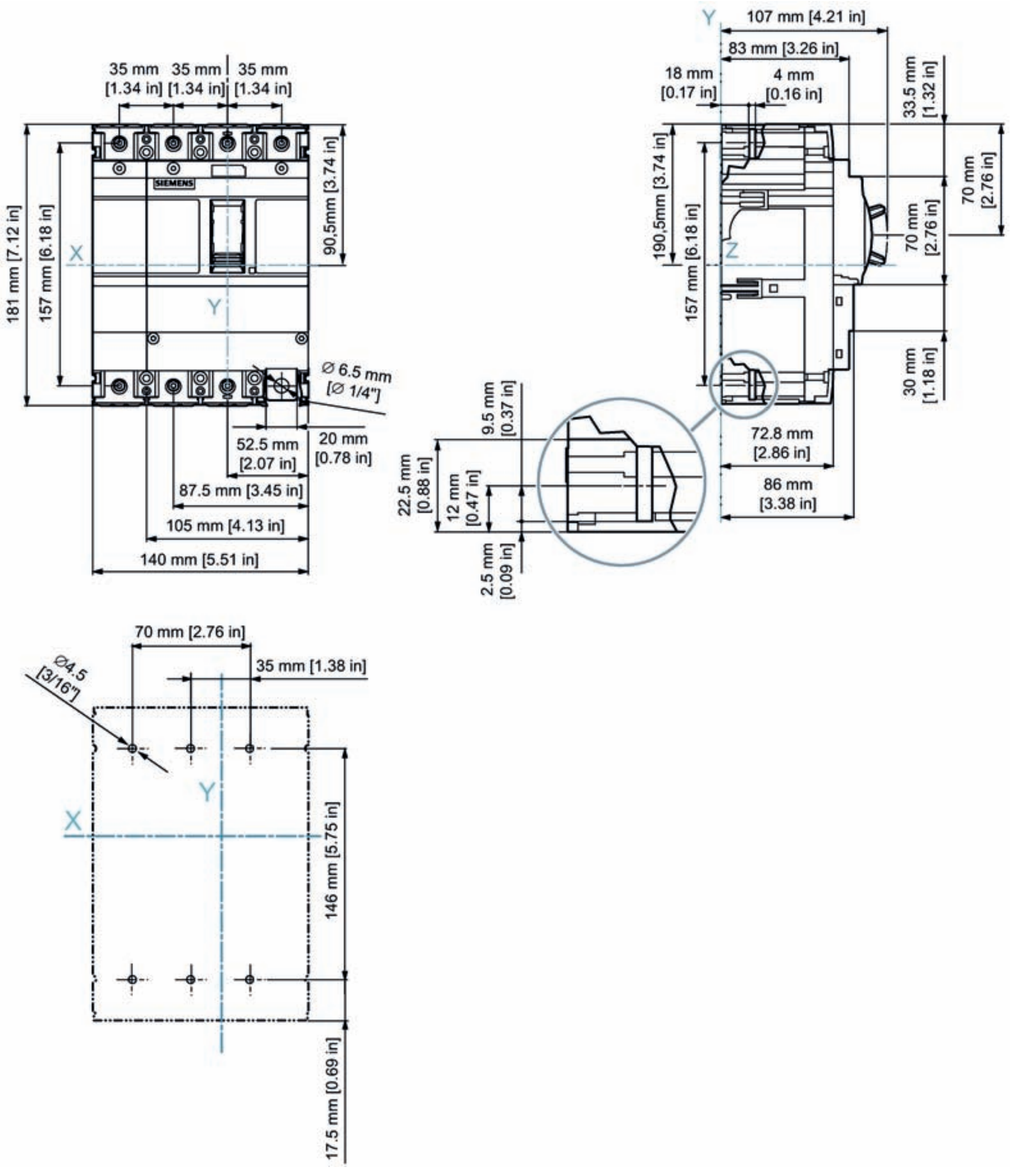

6.2.1.5 3VA23 / 3VA24

3VA23 400 A / 3VA24 630 A 3-pole / 4-pole

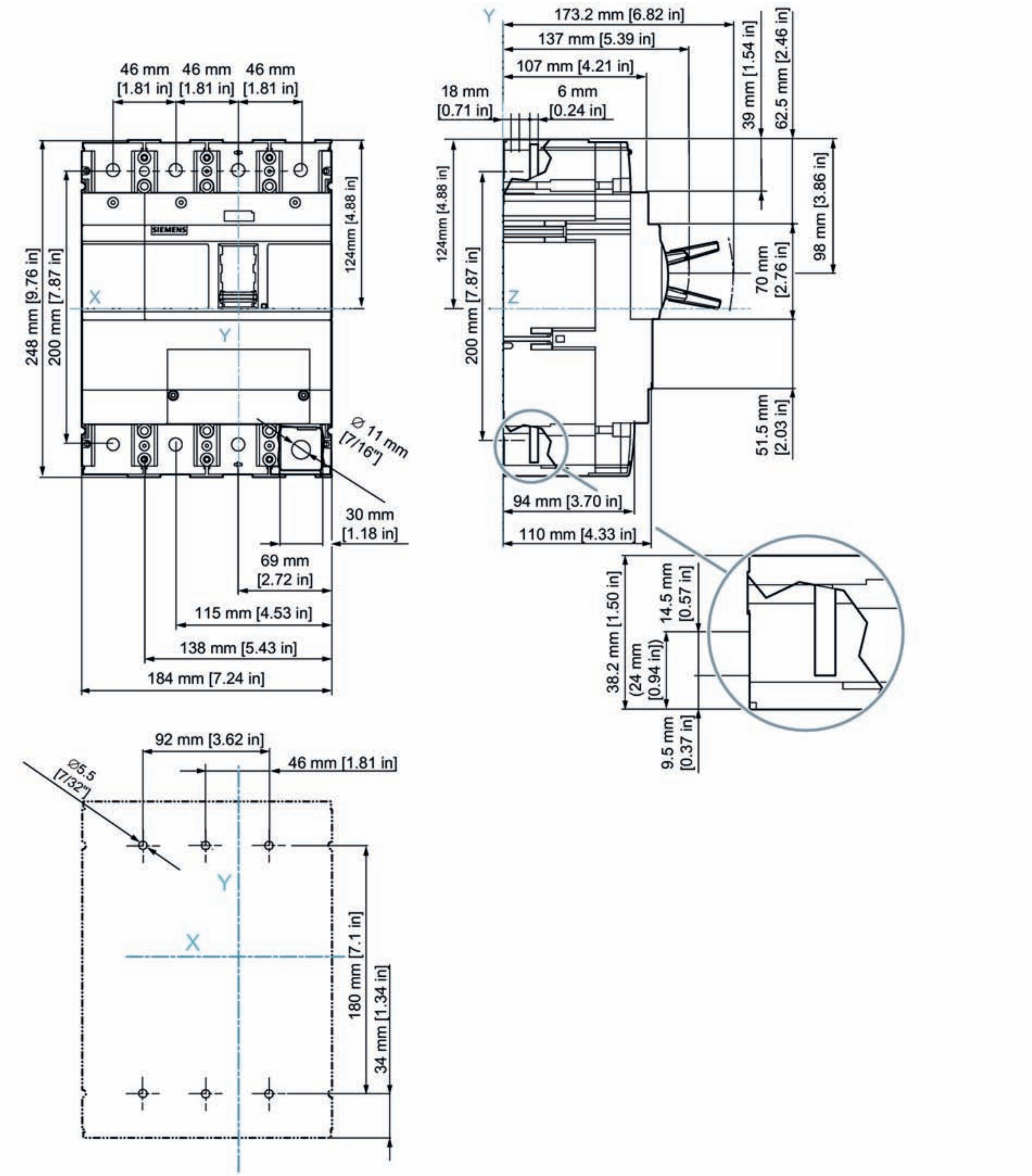

6.2.1.6 3VA25

3VA25 1000 A 3-pole / 4-pole

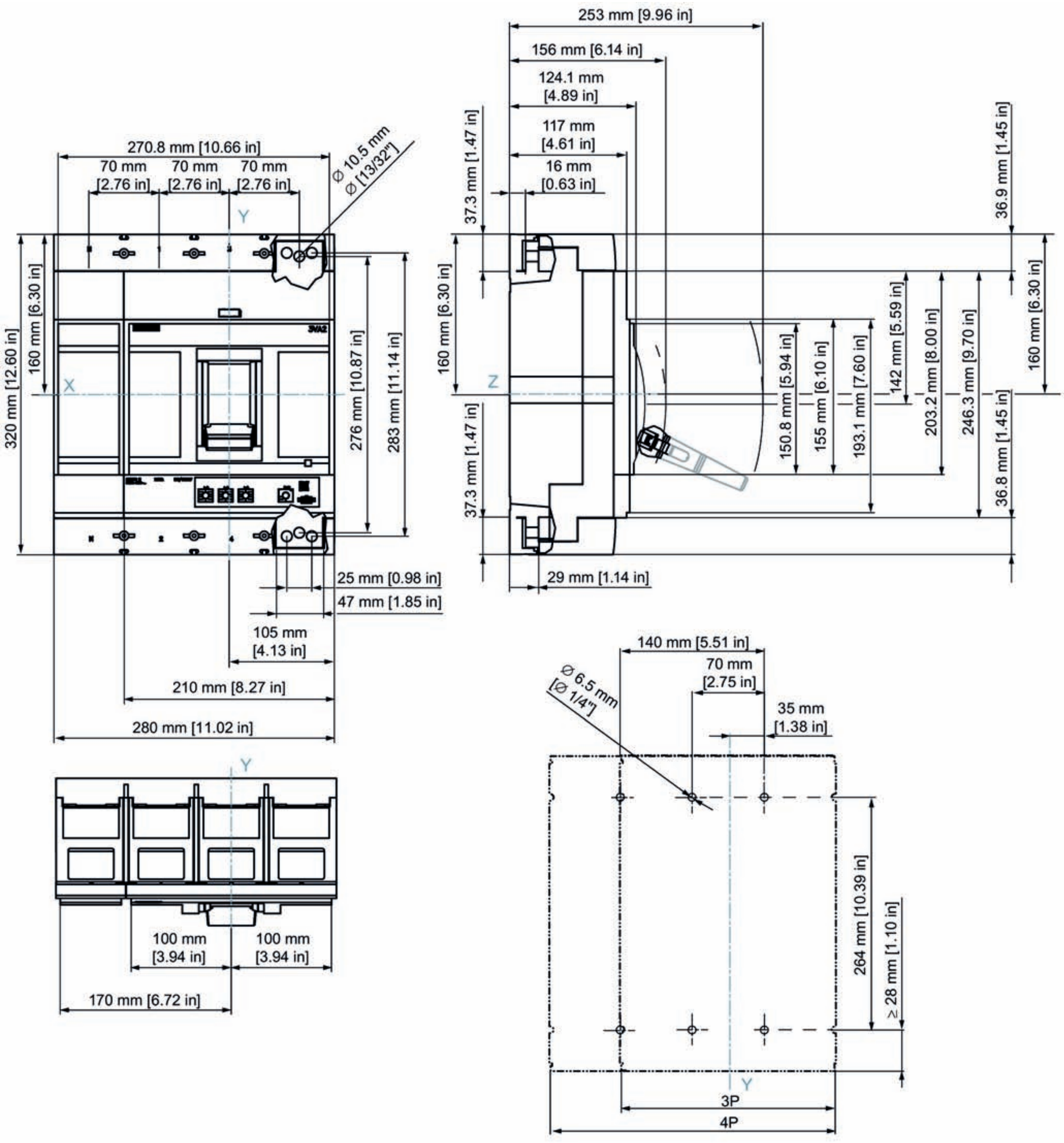

6.2.2 Dimensions of accessories

6.2.2.1 Connection technology

Bus connectors extended or offset for 3VA up to 630 A

Extension

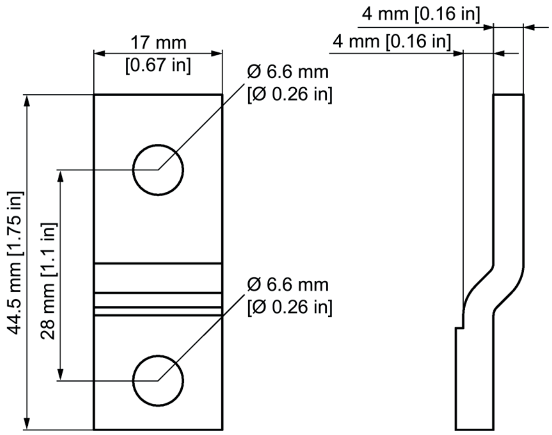

Rotated extension

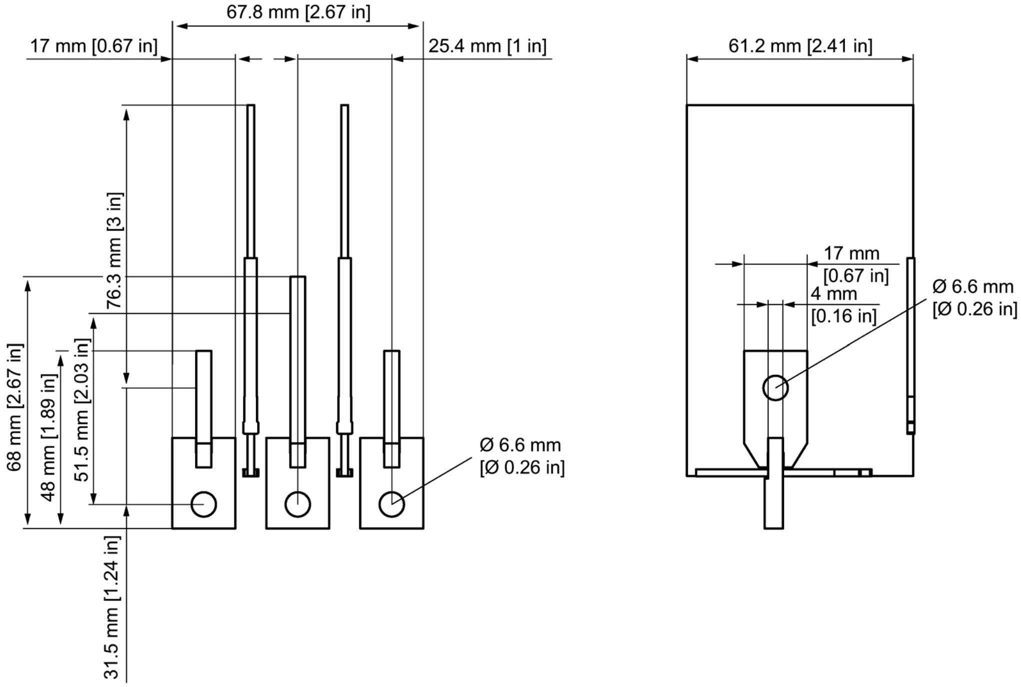

Offset

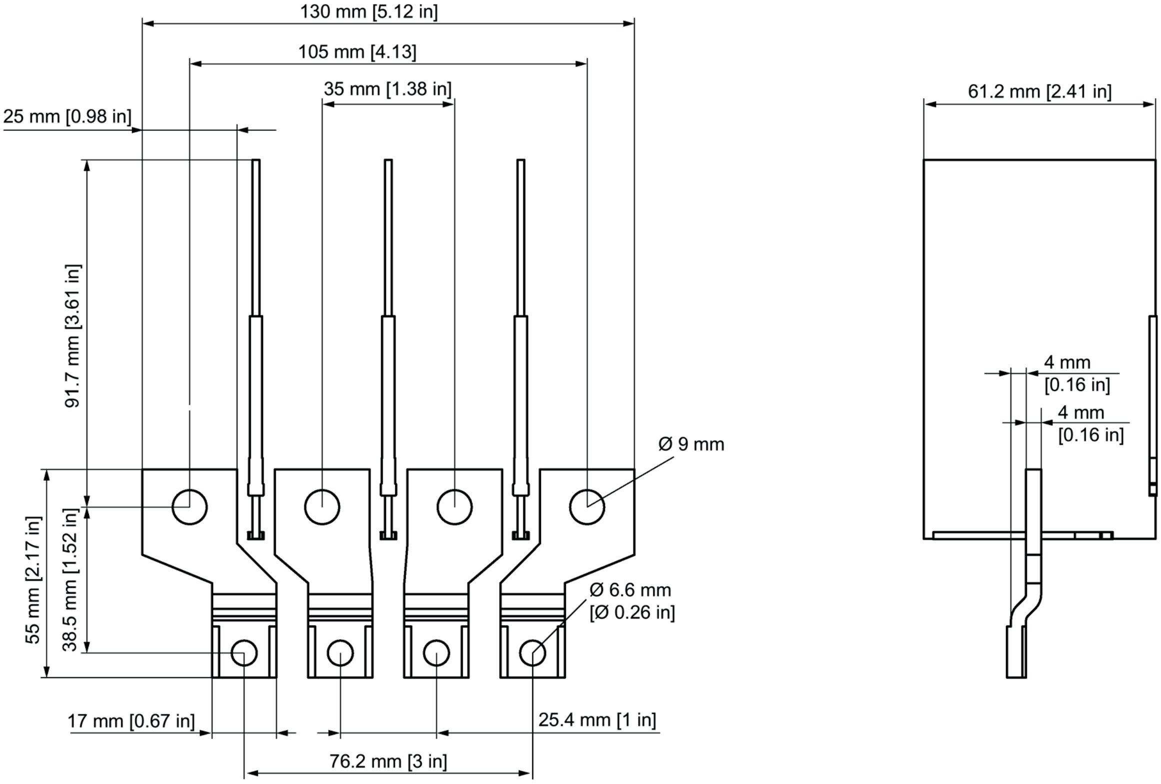

Right-angled extension

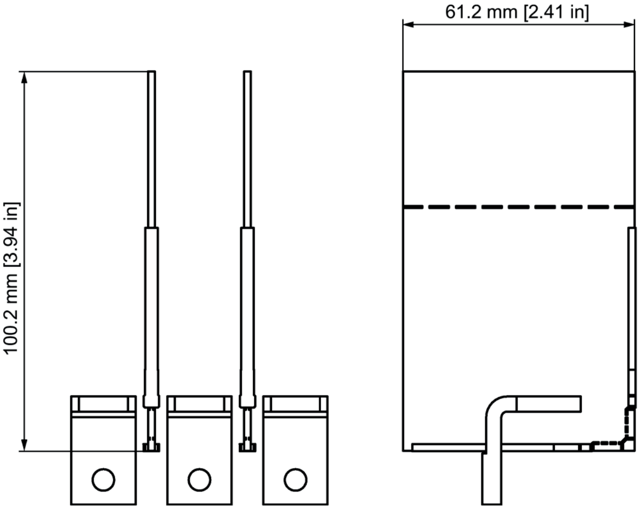

Bus connectors extended or offset for 3VA up to 1000 A

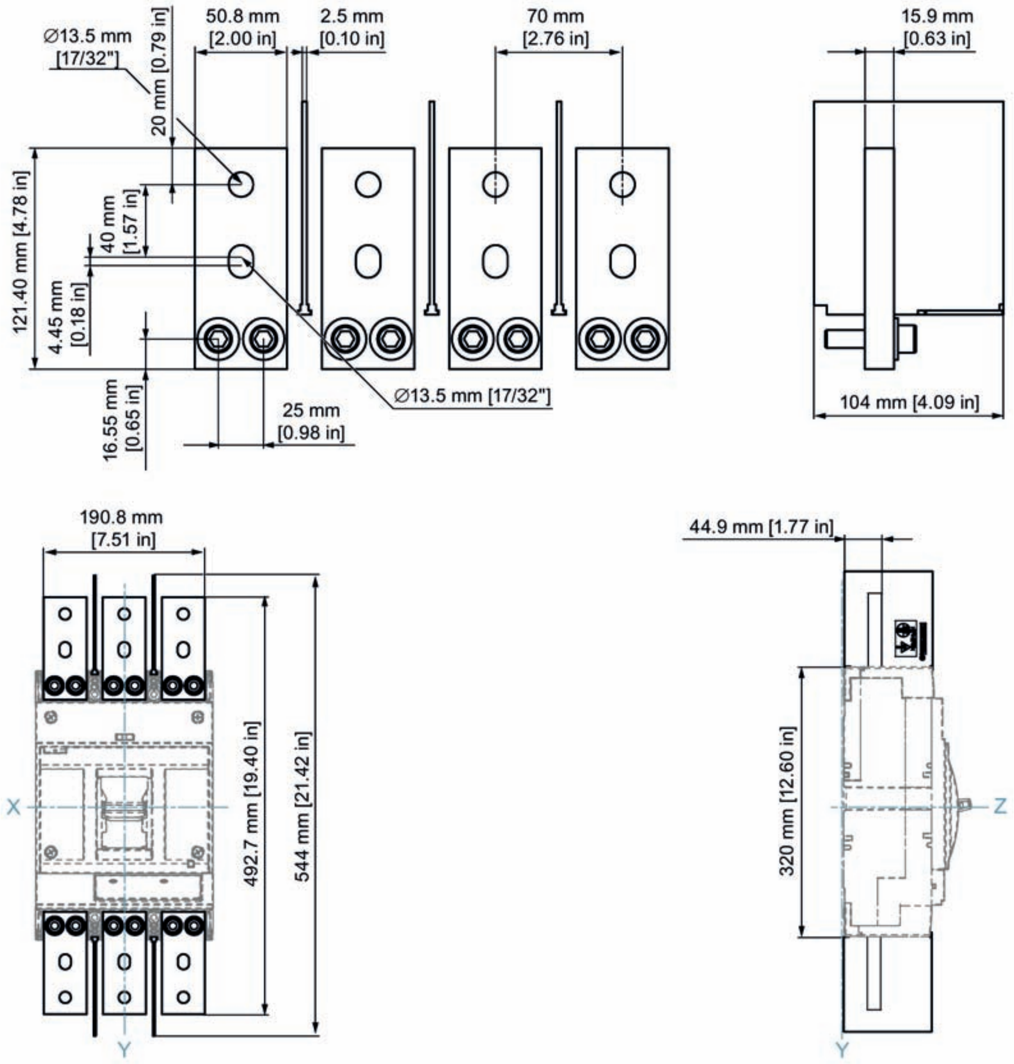

Wire connectors large / for 2 cables / for 6 cables up to 630 A

The dimensions of the terminal cover for wire connectors large / for 2 cables / for 6 cables up to 630 A are shown below.

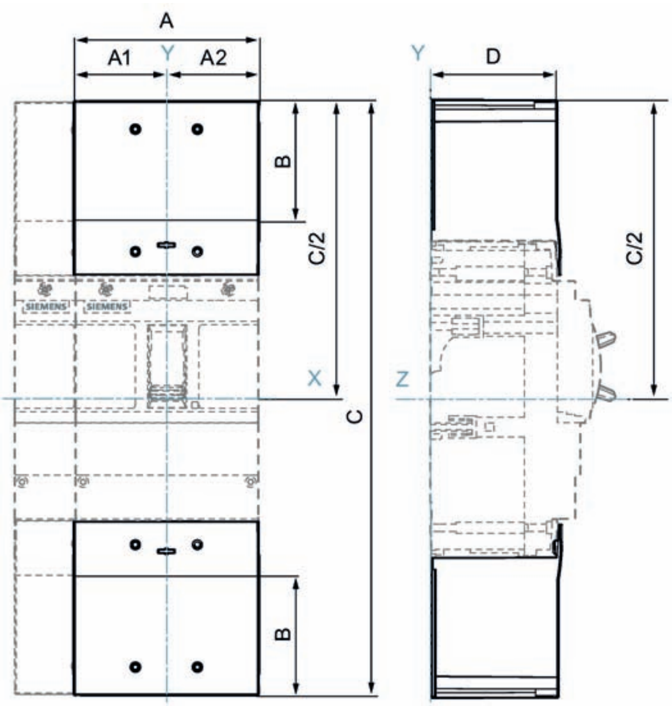

	3VA1						3VA2			
	100 / 160		250		400 / 630		100 / 160 / 250		400 / 630	
	3-pole	4-pole	3-pole	4-pole	3-pole	4-pole	3-pole	4-pole	3-pole	4-pole
A	76.2 mm [3 in]	101.6 mm [3.9 in]	105 mm [4.13 in]	140 mm [5.51 in]	138 mm [5.4 in]	184 mm [7.2 in]	105 mm [4.1 in]	140 mm [5.5 in]	138 mm [5.4 in]	184 mm [7.2 in]
A1	38.1 mm [1.5 in]	63.5 mm [2.5 in]	52.5 mm [2.06 in]	87.5 mm [3.44 in]	69.0 mm [2.71 in]	87.5 mm [3.44 in]	52.5 mm [2.06 in]	87.5 mm [3.44 in]	69.0 mm [2.71 in]	87.5 mm [3.44 in]
A2	38.1 mm [1.5 in]	38.1 mm [1.5 in]	52.5 mm [2.06 in]	52.5 mm [2.06 in]	69.0 mm [2.71 in]	69.0 mm [2.71 in]	52.5 mm [2.06 in]	52.5 mm [2.06 in]	69.0 mm [2.71 in]	69.0 mm [2.71 in]
B	50 mm [1.9 in]		66.6 mm [2.6 in]		64.9 mm [2.6 in]		67.4 mm [2.65 in]		64.9 mm [2.6 in]	
C	230 mm [9.1 in]		291.2 mm [11.5 in]		377.8 mm [14.9 in]		315.8 mm [12.4 in]		377.8 mm [14.9 in]	
C/2	115 mm [4.55 in]		145.6 mm [5.75 in]		188.9 mm [7.45 in]		157.9 mm [6.2 in]		188.9 mm [7.45 in]	
D	67 mm [2.64 in]		61.4 mm [2.4 in]		91.5 mm [3.6 in]		71 mm [2.8 in]		91.5 mm [3.6 in]	

Rear connection stud flat

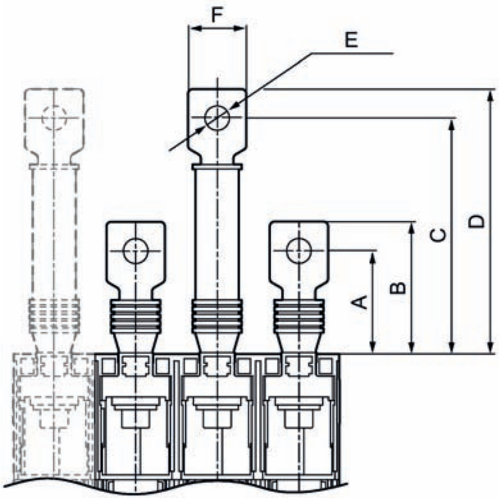

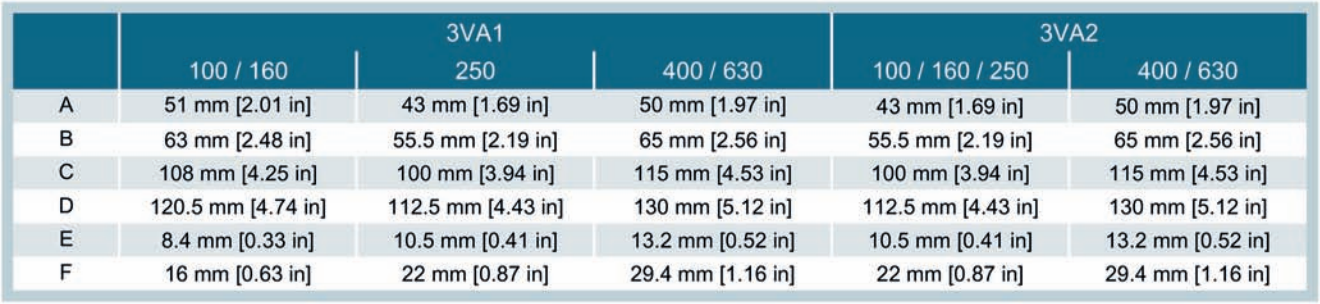

	3VA1			3VA2	
	100 / 160	250	400 / 630	100 / 160 / 250	400 / 630
A	51 mm [2.01 in]	43 mm [1.69 in]	50 mm [1.97 in]	43 mm [1.69 in]	50 mm [1.97 in]
B	63 mm [2.48 in]	55.5 mm [2.19 in]	65 mm [2.56 in]	55.5 mm [2.19 in]	65 mm [2.56 in]
C	108 mm [4.25 in]	100 mm [3.94 in]	115 mm [4.53 in]	100 mm [3.94 in]	115 mm [4.53 in]
D	120.5 mm [4.74 in]	112.5 mm [4.43 in]	130 mm [5.12 in]	112.5 mm [4.43 in]	130 mm [5.12 in]
E	8.4 mm [0.33 in]	10.5 mm [0.41 in]	13.2 mm [0.52 in]	10.5 mm [0.41 in]	13.2 mm [0.52 in]
F	16 mm [0.63 in]	22 mm [0.87 in]	29.4 mm [1.16 in]	22 mm [0.87 in]	29.4 mm [1.16 in]

Rear connection stud round

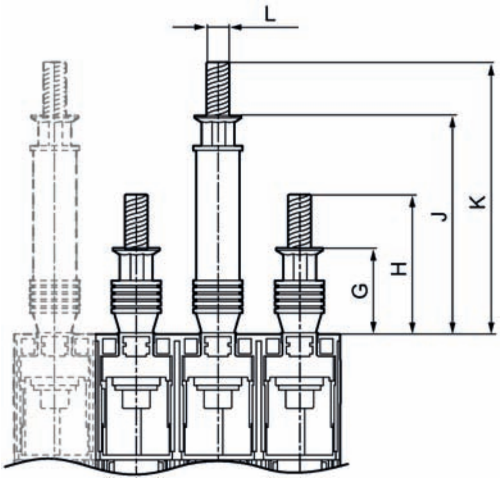

	3VA1			3VA2	
	100 / 160	250	400 / 630	100 / 160 / 250	400 / 630
G	28 mm [1.10 in]	36 mm [1.42 in]	45 mm [1.77 in]	36 mm [1.42 in]	45 mm [1.77 in]
H	66 mm [2.60 in]	59 mm [2.32 in]	75 mm [2.95 in]	59 mm [2.32 in]	75 mm [2.95 in]
J	85 mm [3.35 in]	93 mm [3.66 in]	105 mm [4.13 in]	93 mm [3.66 in]	105 mm [4.13 in]
K	123 mm [4.84 in]	116 mm [4.57 in]	135 mm [5.31 in]	116 mm [4.57 in]	135 mm [5.31 in]
L	M8	M10	M12	M10	M12

Phase barrier

Phase barrier for 3VA up to 630 A

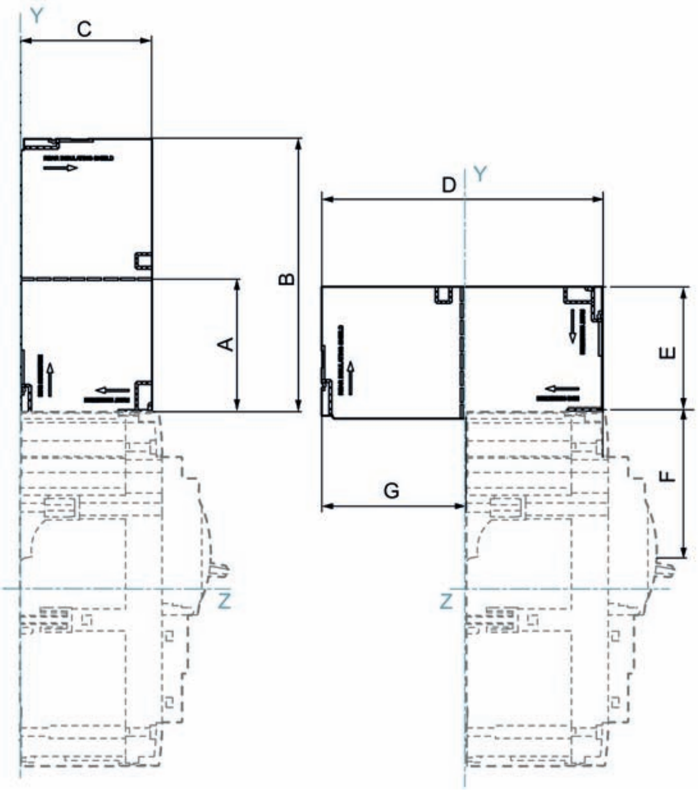

	3VA1			3VA2	
	100 / 160	250	400 / 630	100 / 160 / 250	400 / 630
A	35/65 mm [1.38/2.56 in]	40/93 mm [1.59/3.66 in]	80 mm [3.15 in]	68 mm [2.68 in]	80 mm [3.15 in]
B	97 mm [3.82 in]	138.5 mm [5.45 in]	167 mm [6.58 in]	141 mm [5.55 in]	167 mm [6.58 in]
C	61.5 mm [2.42 in]	64 mm [2.52 in]	88 mm [3.47 in]	69 mm [2.72 in]	88 mm [3.47 in]
D	100.5 mm [3.96 in]	143.5 mm [5.65 in]	175 mm [6.89 in]	146.5 mm [5.77 in]	175 mm [6.89 in]
E	59 mm [2.33 in]	59 mm [2.33 in]	80 mm [3.15 in]	63.4 mm [2.50 in]	80 mm [3.15 in]
F	65 mm [2.56 in]	79 mm [3.11 in]	124 mm [4.89 in]	90.5 mm [3.57 in]	124 mm [4.89 in]
G	42 mm [1.66 in]	81 mm [3.19 in]	88 mm [3.47 in]	79 mm [3.11 in]	88 mm [3.47 in]

Phase barrier for 3VA up to 1000 A

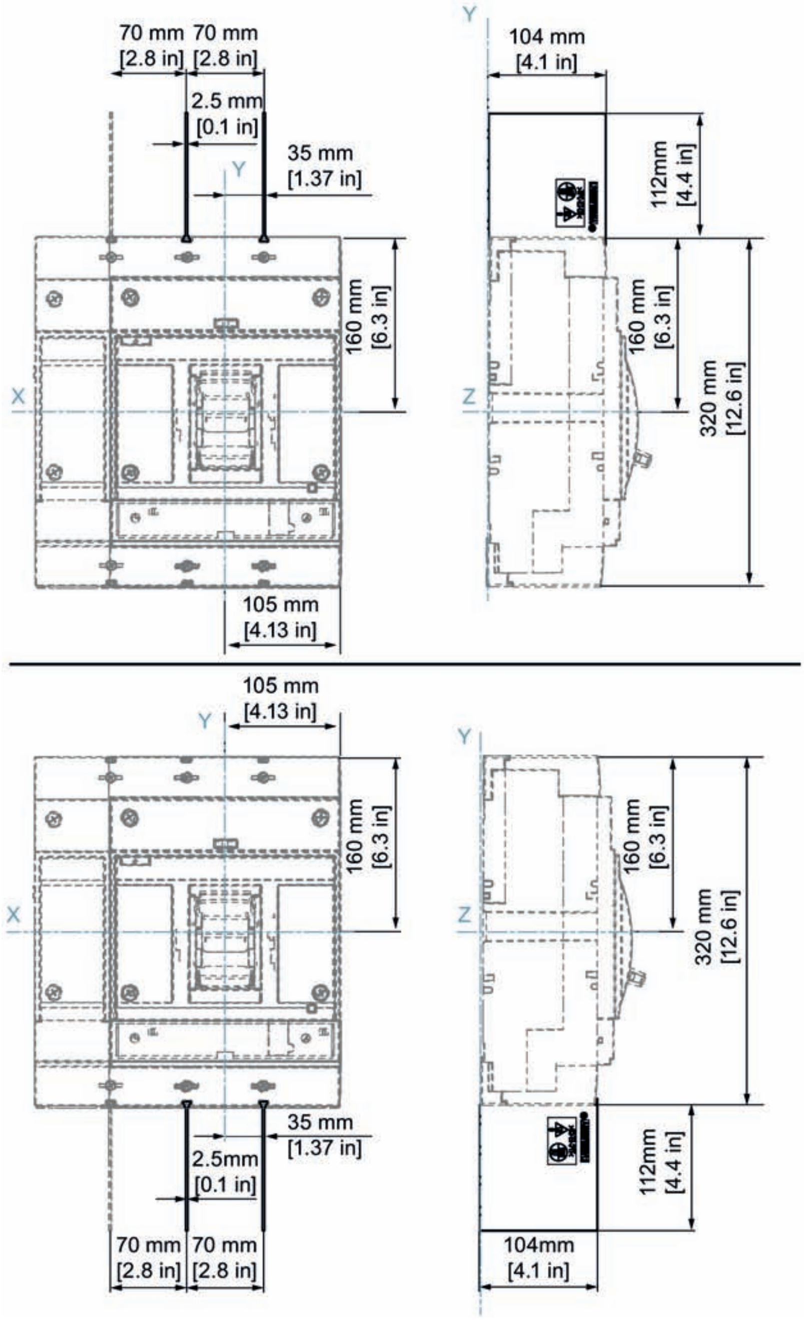

Terminal cover extended

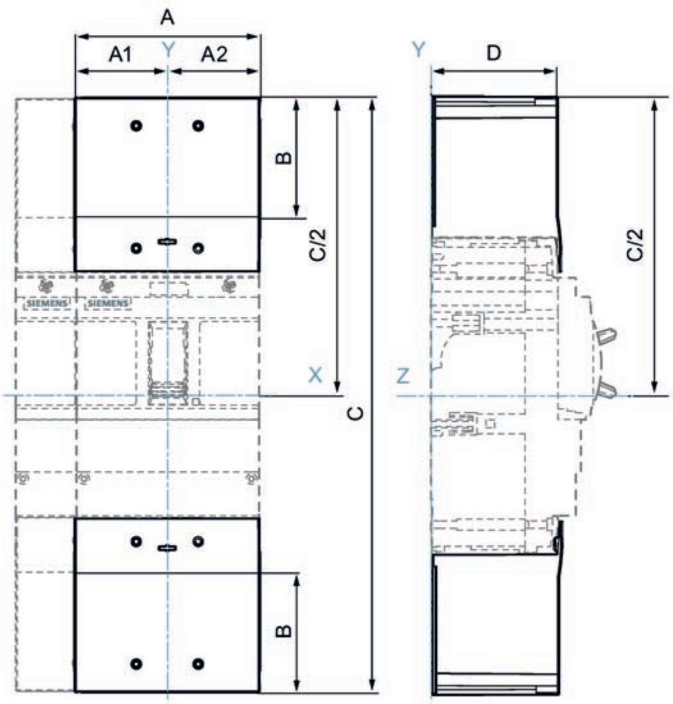

	3VA1							3VA2			
	100 / 160			250		400 / 630		100 / 160 / 250		400 / 630	
	2-pole	3-pole	4-pole	3-pole	4-pole	3-pole	4-pole	3-pole	4-pole	3-pole	4-pole
A	50.8 mm [2 in]	76.2 mm [3 in]	101.6 mm [4 in]	105 mm [4.13 in]	140 mm [5.51 in]	138 mm [5.43 in]	182.2 mm [7.17 in]	105 mm [4.13 in]	140 mm [5.51 in]	138 mm [5.43 in]	182.2 mm [7.17 in]
A1	38.1 mm [1.5 in]	38.1 mm [1.5 in]	63.5 mm [2.5 in]	52.5 mm [2.06 in]	87.5 mm [3.44 in]	69.0 mm [2.71 in]	87.5 mm [3.44 in]	52.5 mm [2.06 in]	87.5 mm [3.44 in]	69.0 mm [2.71 in]	87.5 mm [3.44 in]
A2	12.7 mm [0.5 in]	38.1 mm [1.5 in]	38.1 mm [1.5 in]	52.5 mm [2.06 in]	52.5 mm [2.06 in]	69.0 mm [2.71 in]	69.0 mm [2.71 in]	52.5 mm [2.06 in]	52.5 mm [2.06 in]	69.0 mm [2.71 in]	69.0 mm [2.71 in]
B	52 mm [2.05 in]			67.4 mm [2.65 in]		64.9 mm [2.56 in]		67.4 mm [2.65 in]		64.9 mm [2.56 in]	
C	234 mm [9.21 in]			292.8 mm [11.53 in]		377.8 mm [14.87 in]		315.8 mm [12.43 in]		377.8 mm [14.87 in]	
C/2	117 mm [4.61 in]			146.4 mm [5.76 in]		188.9 mm [7.44 in]		157.9 mm [6.22 in]		188.9 mm [7.44 in]	
D	67 mm [2.64 in]			61.4 mm [2.4 in]		91.5 mm [3.6 in]		71 mm [2.8 in]		91.5 mm [3.6 in]	

Terminal cover offset

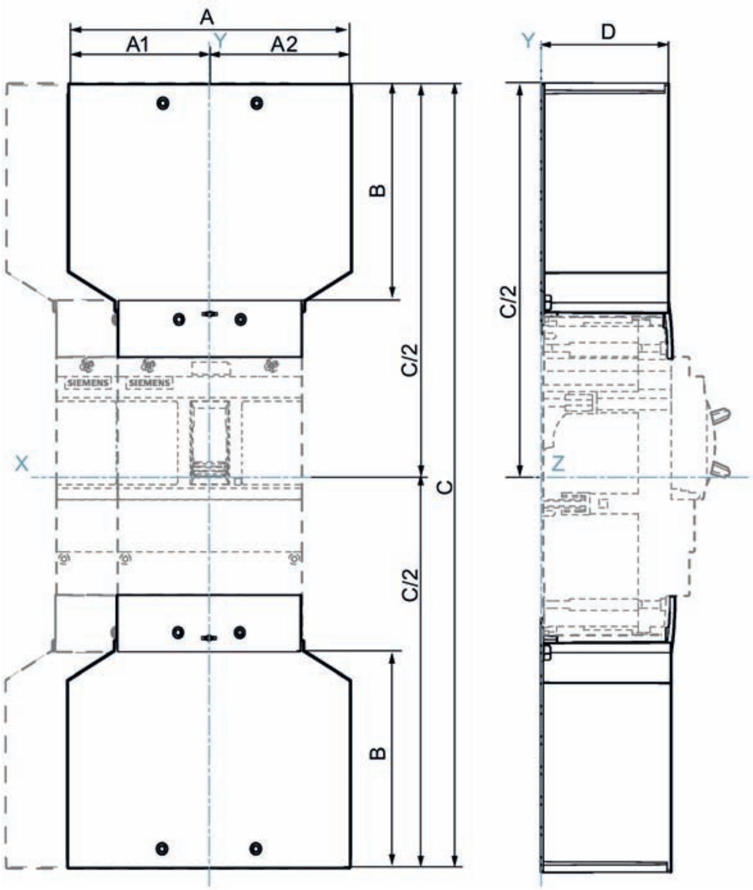

	3VA1						3VA2			
	100 / 160		250		400 / 630		100 / 160 / 250		400 / 630	
	3-pole	4-pole	3-pole	4-pole	3-pole	4-pole	3-pole	4-pole	3-pole	4-pole
A	106.5 mm [4.19 in]	141.5 mm [5.57 in]	136.8 mm [5.39 in]	181.8 mm [7.16 in]	212 mm [8.35 in]	282 mm [11.1 in]	136.8 mm [5.39 in]	181.8 mm [7.16 in]	212 mm [8.35 in]	282 mm [11.1 in]
A1	53.3 mm [2.1 in]	88.4 mm [3.48 in]	68.4 mm [2.69 in]	113.6 mm [4.47 in]	106.0 mm [4.17 in]	176.3 mm [6.94 in]	68.4 mm [2.69 in]	113.6 mm [4.47 in]	106.0 mm [4.17 in]	176.3 mm [6.94 in]
A2	53.3 mm [2.1 in]	53.1 mm [2.09 in]	68.4 mm [2.69 in]	68.2 mm [2.69 in]	106.0 mm [4.17 in]	105.8 mm [4.17 in]	68.4 mm [2.69 in]	68.2 mm [2.69 in]	106.0 mm [4.17 in]	105.8 mm [4.17 in]
B	96.5 mm [3.8 in]		133.7 mm [5.26 in]		147.5 mm [5.81 in]		133.7 mm [5.26 in]		147.5 mm [5.81 in]	
C	323 mm [12.72 in]		425.4 mm [16.75 in]		543 mm [21.38 in]		448.4 mm [17.65 in]		543 mm [21.38 in]	
C/2	161.5 mm [6.36 in]		212.7 mm [8.37 in]		271.5 mm [10.69 in]		224.2 mm [8.83 in]		271.5 mm [10.69 in]	
D	67 mm [2.64 in]		61.4 mm [2.4 in]		91.5 mm [3.6 in]		71 mm [2.8 in]		91.5 mm [3.6 in]	

Insulating plate

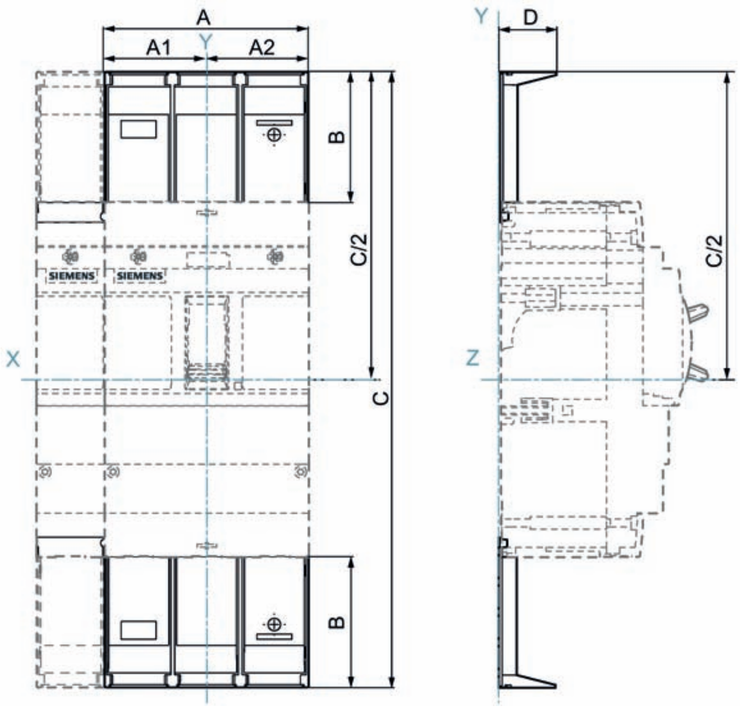

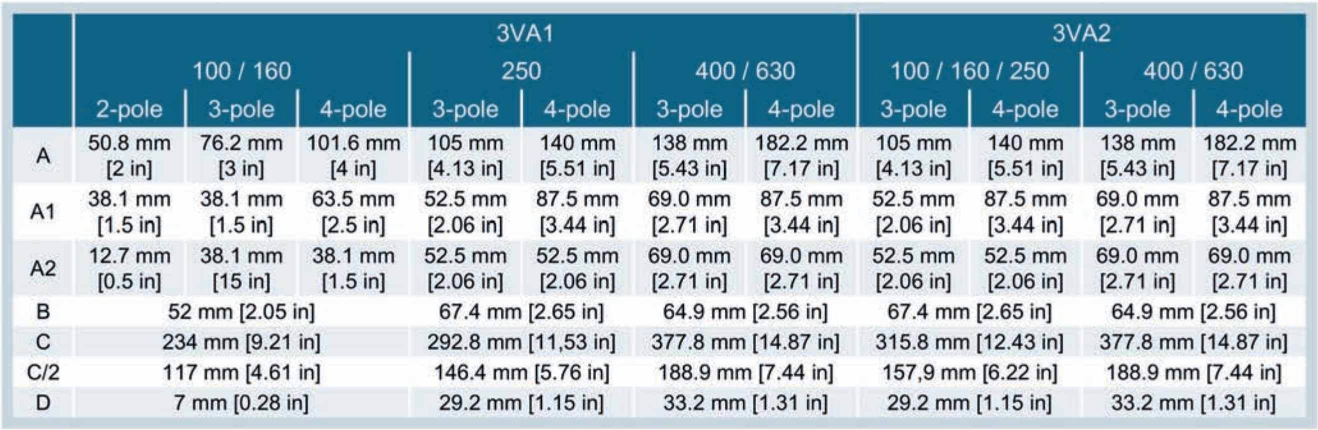

	3VA1							3VA2			
	100 / 160			250		400 / 630		100 / 160 / 250		400 / 630	
	2-pole	3-pole	4-pole	3-pole	4-pole	3-pole	4-pole	3-pole	4-pole	3-pole	4-pole
A	50.8 mm [2 in]	76.2 mm [3 in]	101.6 mm [4 in]	105 mm [4.13 in]	140 mm [5.51 in]	138 mm [5.43 in]	182.2 mm [7.17 in]	105 mm [4.13 in]	140 mm [5.51 in]	138 mm [5.43 in]	182.2 mm [7.17 in]
A1	38.1 mm [1.5 in]	38.1 mm [1.5 in]	63.5 mm [2.5 in]	52.5 mm [2.06 in]	87.5 mm [3.44 in]	69.0 mm [2.71 in]	87.5 mm [3.44 in]	52.5 mm [2.06 in]	87.5 mm [3.44 in]	69.0 mm [2.71 in]	87.5 mm [3.44 in]
A2	12.7 mm [0.5 in]	38.1 mm [15 in]	38.1 mm [1.5 in]	52.5 mm [2.06 in]	52.5 mm [2.06 in]	69.0 mm [2.71 in]	69.0 mm [2.71 in]	52.5 mm [2.06 in]	52.5 mm [2.06 in]	69.0 mm [2.71 in]	69.0 mm [2.71 in]
B	52 mm [2.05 in]			67.4 mm [2.65 in]		64.9 mm [2.56 in]		67.4 mm [2.65 in]		64.9 mm [2.56 in]	
C	234 mm [9.21 in]			292.8 mm [11,53 in]		377.8 mm [14.87 in]		315.8 mm [12.43 in]		377.8 mm [14.87 in]	
C/2	117 mm [4.61 in]			146.4 mm [5.76 in]		188.9 mm [7.44 in]		157,9 mm [6.22 in]		188.9 mm [7.44 in]	
D	7 mm [0.28 in]			29.2 mm [1.15 in]		33.2 mm [1.31 in]		29.2 mm [1.15 in]		33.2 mm [1.31 in]	

Insulating plate offset:

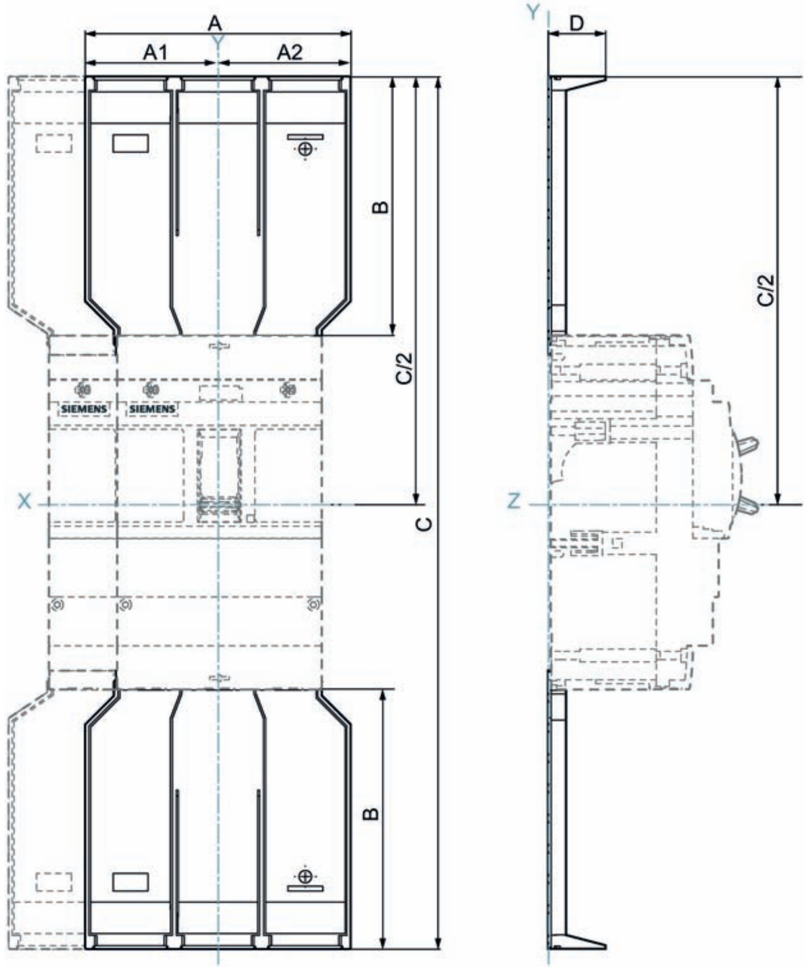

	3VA1						3VA2			
	100 / 160		250		400 / 630		100 / 160 / 250		400 / 630	
	3-pole	4-pole	3-pole	4-pole	3-pole	4-pole	3-pole	4-pole	3-pole	4-pole
A	106.5 mm [4.19 in]	141.5 mm [5.57 in]	136.8 mm [5.39 in]	181.8 mm [7.16 in]	212 mm [8.35 in]	282 mm [11.1 in]	136.8 mm [5.39 in]	181.8 mm [7.16 in]	212 mm [8.35 in]	282 mm [11.1 in]
A1	53.3 mm [2.1 in]	88.4 mm [3.48 in]	68.4 mm [2.69 in]	113.6 mm [4.47 in]	106.0 mm [4.17 in]	176.3 mm [6.94 in]	68.4 mm [2.69 in]	113.6 mm [4.47 in]	106.0 mm [4.17 in]	176.3 mm [6.94 in]
A2	53.3 mm [2.1 in]	53.1 mm [2.09 in]	68.4 mm [2.69 in]	68.2 mm [2.69 in]	106.0 mm [4.17 in]	105.8 mm [4.17 in]	68.4 mm [2.69 in]	68.2 mm [2.69 in]	106.0 mm [4.17 in]	105.8 mm [4.17 in]
B	96.5 mm [3.8 in]		133.7 mm [5.26 in]		147.5 mm [5.81 in]		133.7 mm [5.26 in]		147.5 mm [5.81 in]	
C	323 mm [12.72 in]		425.4 mm [16.75 in]		543 mm [21.38 in]		448.4 mm [17.65 in]		543 mm [21.38 in]	
C/2	161.5 mm [6.36 in]		212.7 mm [8.37 in]		271.5 mm [10.69 in]		224.2 mm [8.83 in]		271.5 mm [10.69 in]	
D	26.8 mm [1.06 in]		29.5 mm [1.16 in]		37.3 mm [1.47 in]		29.5 mm [1.16 in]		37.3 mm [1.47 in]	

6.2.2.2 Plug-in and draw-out units

Plug-in socket

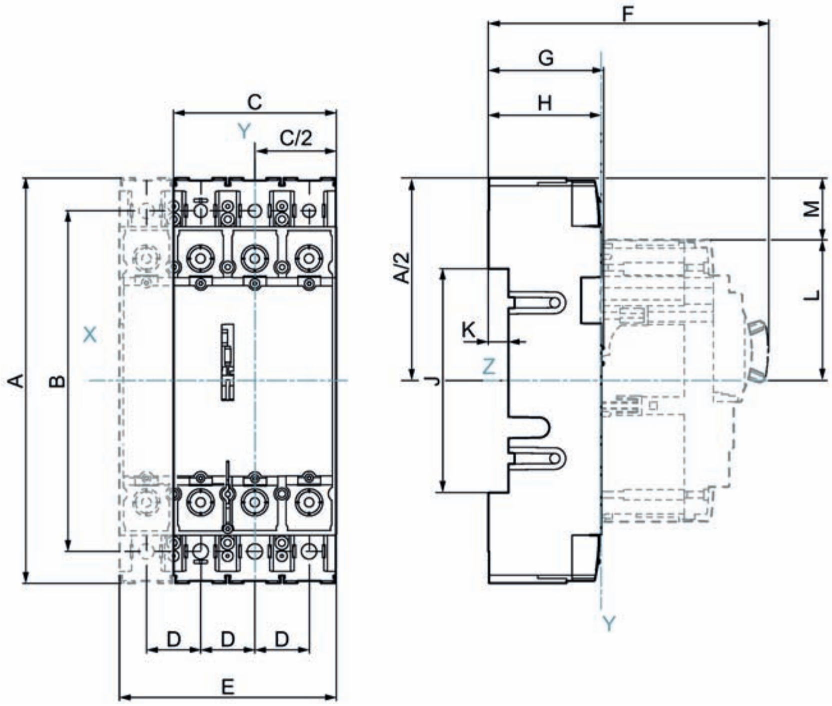

	3VA1			3VA2	
	100 / 160	250	400 / 630	100 / 160 / 250	400 / 630
A	186.1 mm [7.3 in]	237 mm [9.3 in]	327 mm [12.9 in]	261 mm [10.3 in]	327 mm [12.9 in]
A/2	93.1 mm [3.7 in]	118.5 mm [4.7 in]	163.5 mm [6.5 in]	130.5 mm [5.2 in]	163.5 mm [6.5 in]
B	153.8 mm [6.1 in]	196 mm [7.7 in]	279 mm [11 in]	220 mm [8.7 in]	279 mm [11 in]
C	76.2 mm [3 in]	105 mm [4.1in]	138 mm [5.4 in]	105 mm [4.1 in]	138 mm [5.4 in]
C/2	38.1 mm [1.5 in]	52.5 mm [2.1 in]	69 mm [2.7 in]	52.5 mm [2.1 in]	69 mm [2.7 in]
D	25.4 mm [1 in]	35 mm [1.4 in]	46 mm [1.8 in]	35 mm [1.4 in]	46 mm [1.8 in]
E	101.6 mm [4 in]	140 mm [5.5 in]	184 mm [7.2 in]	140 mm [5.5 in]	184 mm [7.2 in]
F	153 mm [6 in]	155.4 mm [6.1 in]	232 mm [9.1 in]	180 mm [7.1 in]	232 mm [9.1 in]
G	66.5 mm [2.6 in]		95.5 mm [3.8 in]	74.5 mm [2.9 in]	95.5 mm [3.8 in]
H	65 mm [2.6 in]		94 mm [3.7 in]	73 mm [2.9 in]	94 mm [3.7 in]
J	122.3 mm [4.8 in]	149.5 mm [5.9 in]	192 mm [7.6 in]	144 mm [5.7 in]	192 mm [7.6 in]
K	5 mm [0.2 in]		34 mm [1.3 in]	13 mm [0.5 in]	34 mm [1.3 in]
L	60 mm [2.4 in]	79 mm [3.1 in]	98 mm [3.9 in]	70 mm [2.8 in]	98 mm [3.9 in]
M	28 mm [1.1 in]	39.5 mm [1.6 in]	39.5 mm [1.6 in]	40 mm [1.6 in]	39.5 mm [1.6 in]

Draw-out unit

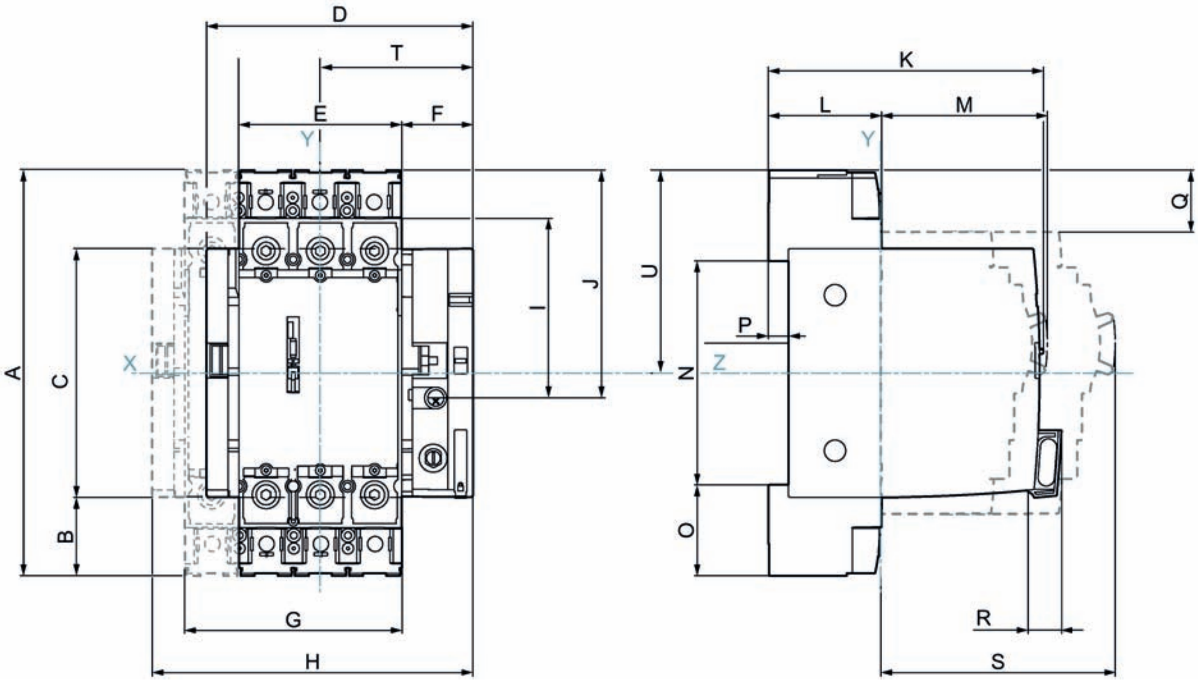

	3VA1		3VA2	
	250	400 / 630	100 / 160 / 250	400 / 630
A	237 mm [10.7 in]	327 mm [12.9 in]	261 mm [10.3 in]	327 mm [12.9 in]
B	38.5 mm [1.5 in]	83.5 mm [3.3 in]	50.5 mm [2 in]	83.5 mm [3.3 in]
C	160 mm [6.3 in]			
D	172 mm [6.8 in]	205 mm [8.1 in]	172 mm [6.8 in]	205 mm [8.1 in]
E	105 mm [4.1 in]	138 mm [5.4 in]	105 mm [4.1 in]	138 mm [5.4 in]
F	46 mm [1.8 in]			
G	140 mm [5.5 in]	184 mm [7.2 in]	140 mm [5.5 in]	184 mm [7.2 in]
H	207 mm [8.1 in]	251 mm [9.9 in]	207 mm [8.1 in]	251 mm [9.9 in]
I	104 mm [4.1 in]	140.5 mm [5.5 in]	115.6 mm [4.6 in]	140.5 mm [5.5 in]
J	134.5 mm [5.3 in]	179.5 mm [7.1 in]	146.5 mm [5.8 in]	179.5 mm [7.1 in]
K	169.5 mm [6.7 in]	199 mm [7.8 in]	178 mm [0.9 in]	199 mm [7.8 in]
L	65 mm [2.6 in]	94 mm [3.7 in]	73 mm [2.9 in]	94 mm [3.7 in]
M	90.4 mm [3.6 in]	107 mm [4.2 in]		
N	149.5 mm [5.9 in]	192 mm [7.6 in]	144 mm [5.7 in]	192 mm [7.6 in]
O	43.8 mm [1.7 in]	67.5 mm [2.7 in]	58.5 mm [2.1 in]	67.5 mm [2.7 in]
P	5 mm [0.2 in]	34 mm [1.3 in]	13 mm [0.5 in]	34 mm [1.3 in]
Q	39.5 mm [1.6 in]	40 mm [1.6 in]		
R	12.5 mm [0.5 in]			
S	132.4 mm [5.2 in]	149 mm [5.9 in]		
T	98.5 mm [3.8 in]	148.5 mm [5.9 in]	98.5 mm [3.8 in]	148.5 mm [5.9 in]
U	118.5.mm [5.6 in]	163.5 mm [6.6 in]	130.5 mm [5.2 mm]	163.5 mm [6.6 in]

Door feedthrough

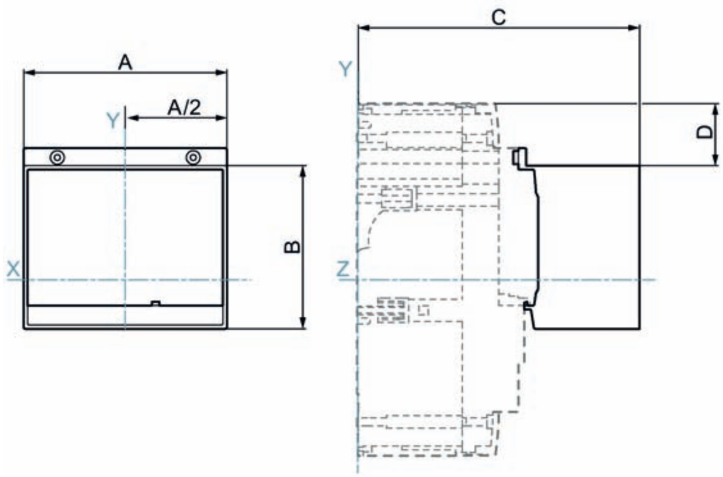

	3VA1		3VA2	
	250	400 / 630	100 / 160 / 250	400 / 630
A	104.6 mm [4.1 in]	137.6 mm [5.4 in]	104.6 mm [4.1 in]	137.6 mm [5.4 in]
A/2	52.3 mm [2.1 in]	68.8 mm [2.7 in]	52.3 mm [2.1 in]	68.8 mm [2.7 in]
B	84 mm [3.3 in]	108.5 mm [4.27 in]	84 mm [3.3 in]	108.5 mm [4.3in]
C	129.3 mm [5.1 in]	172.0 mm [6,77 in]	145.3 mm [5.7 in]	172 mm [6.8 in]
D	34 mm [1.3 in]	51.0 mm [2,01 in]	31.5 mm [1.2 in]	51 mm [2 in]

6.2.2.3 Manual operators

Front mounted rotary operator

Front mounted rotary operator for 3VA up to 630 A

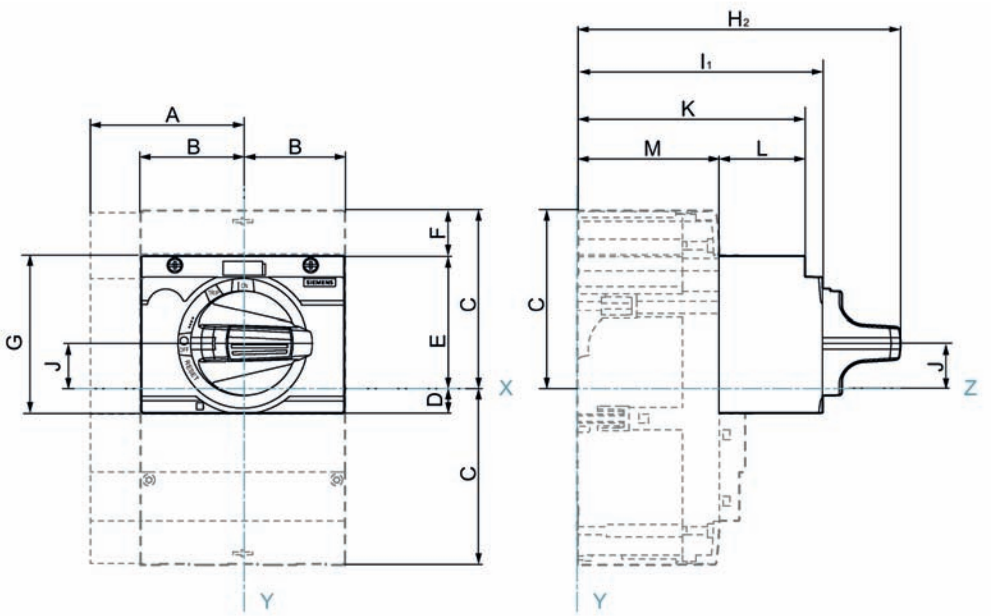

	3VA1			3VA2	
	100 / 160	250	400 / 630	100 / 160 / 250	400 / 630
A	63.5 mm [2.50 in]	87.5 mm [3.44 in]	115 mm [4.53 in]	87.5 mm [3.44 in]	115 mm [4.53 in]
B	38.1 mm [1.50 in]	52.5 mm [2.07 in]	69 mm [2.72 in]	52.5 mm [2.07 in]	69 mm [2.72 in]
C	65 mm [2.56 in]	79 mm [3.11 in]	124 mm [4.88 in]	90.5 mm [3.56 in]	124 mm [4.88 in]
D	22.6 mm [0.89 in]	18 mm [0.71 in]	8.5 mm [0.33 in]	13.1 mm [0.52 in]	8.5 mm [0.33 in]
E	47.4 mm [1.87 in]	57 mm [2.24 in]	84.9 mm [3.34 in]	67.9 mm [2.67 in]	84.9 mm [3.34 in]
F	17.6 mm [0.69 in]	22 mm [0.87 in]	39 mm [1.54 in]	22.6 mm [0.89 in]	39 mm [1.54 in]
G	45 mm [1.77 in]			70 mm [2.76 in]	
H_2	159 mm [6.26 in]	158 mm [6.22 in]	200 mm [7.87 in]	181 mm [7.13 in]	200 mm [7.87 in]
I_1	116.6 mm [4.59 in]	114.5 mm [4.51 in]	160 mm [6.30 in]	136.1 mm [5.36 in]	160 mm [6.30 in]
J	0 mm [0 in]	4.6 mm [0.18 in]	27.5 mm [1.08 in]	22.9 mm [0.90 in]	27.5 mm [1.08 in]
K	111 mm [4.37 in]	109 mm [4.29 in]	151 mm [5.94 in]	127 mm [5.00 in]	151 mm [5.94 in]
L	46 mm [1.81 in]		57 mm [2.24 in]	54 mm [2.13 in]	57 mm [2.24 in]
M	65 mm [2.56 in]	63 mm [2.48 in]	94 mm [3.70 in]	73 mm [2.87 in]	94 mm [3.70 in]

Front mounted rotary operator for 3VA up to 1000 A

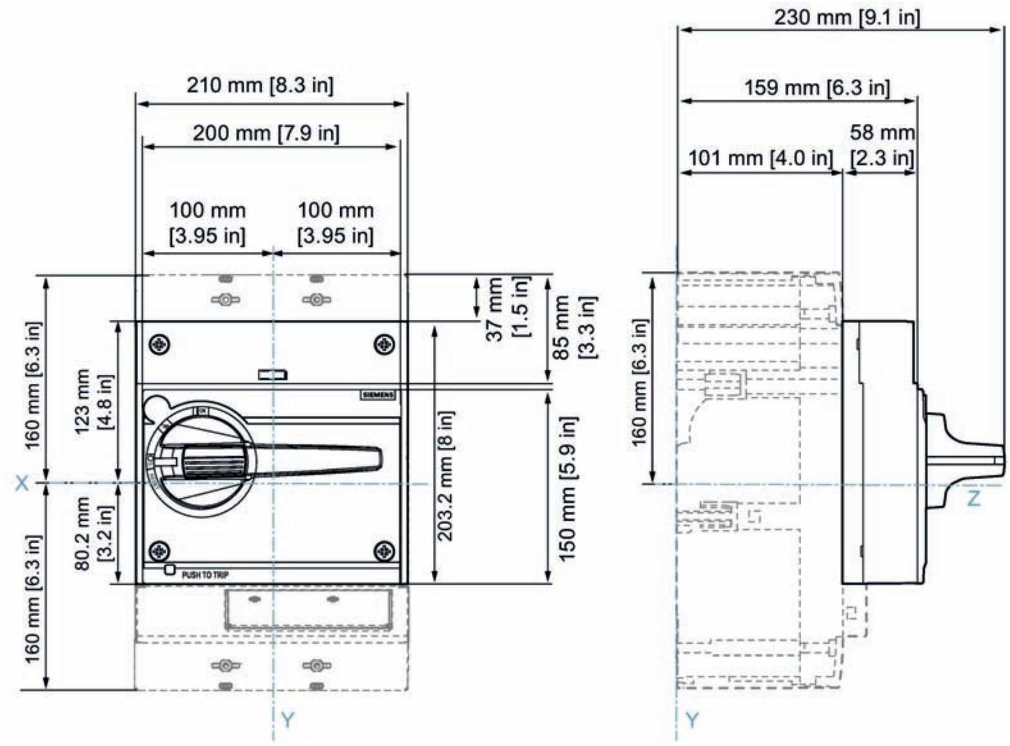

Door mounted rotary operator

Door mounted rotary operator for 3VA up to 630 A (3VA9..7 - 0FK2.)

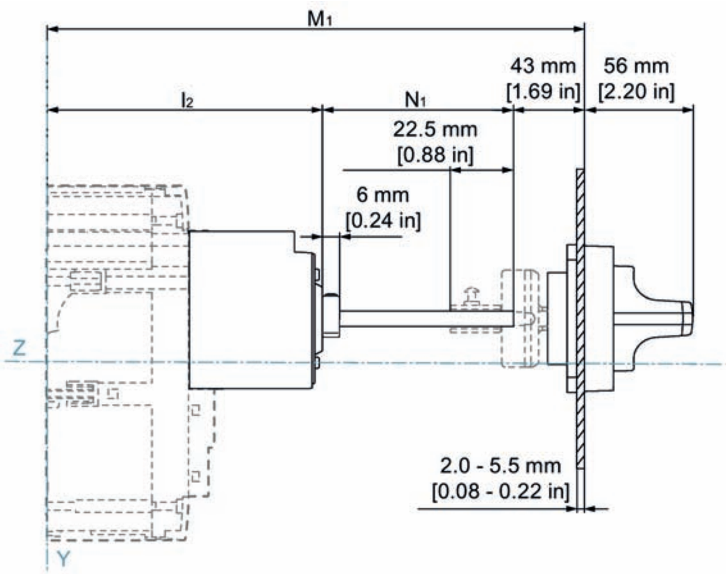

	3VA1			3VA2	
	100 / 160	250	400 / 630	100 / 160 / 250	400 / 630
I_2	119.1 mm [4.69 in]	117 mm [4.61 in]	165 mm [6.50 in]	141.1 mm [5.56 in]	165 mm [6.50 in]
M_{1min}	191.1 mm [7.52 in]	189 mm [7.44 in]	237 mm [9.33 in]	213.1 mm [8.39 in]	237 mm [9.33 in]
M_{1max}	440 mm [17.32 in]	438 mm [17.24 in]	483 mm [19.02 in]	460 mm [18.11 in]	483 mm [19.02 in]
N_1	$M_1 - I_2$ – 43 mm [1.69 in]				

Door mounted rotary operator for 3VA up to 630 A (3VA9..7 - 0FK61)

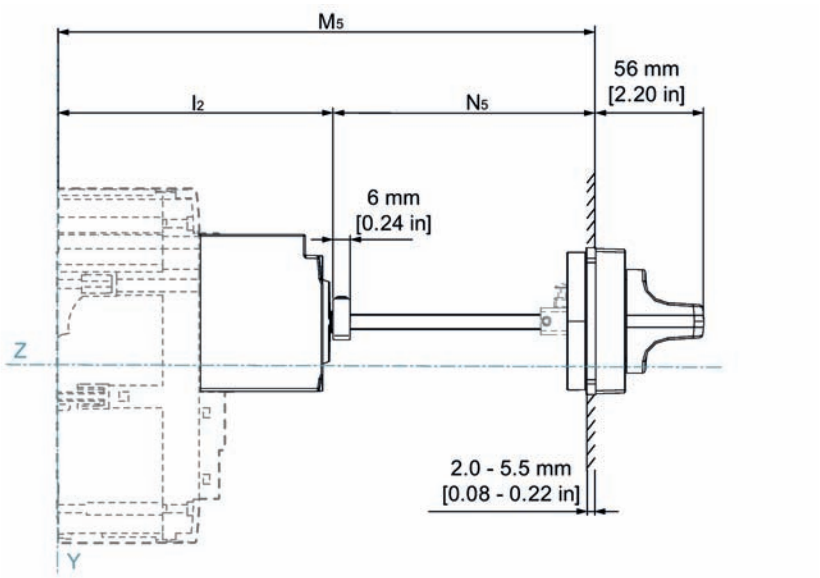

	3VA1			3VA2	
	100 / 160	250	400 / 630	100 / 160 / 250	400 / 630
I_2	119.1 mm [4.69 in]	117 mm [4.61 in]	165 mm [6.50 in]	141.1 mm [5.56 in]	165 mm [6.50 in]
M_{5min}	149 mm [5.87 in]	147 mm [5.79 in]	195 mm [7.68 in]	171 mm [6.73 in]	195 mm [7.68 in]
M_{5max}	398 mm [15.28 in]	396 mm [15.20 in]	441 mm [17.36 in]	418 mm [16.45 in]	441 mm [17.36 in]
N_5	$M_5 - I_2$ – 5 mm [0.20 in]				

Door mounted rotary operator with variable depth adapter (3VA9487-0GB10, 3VA9..7 - 0FK2.)

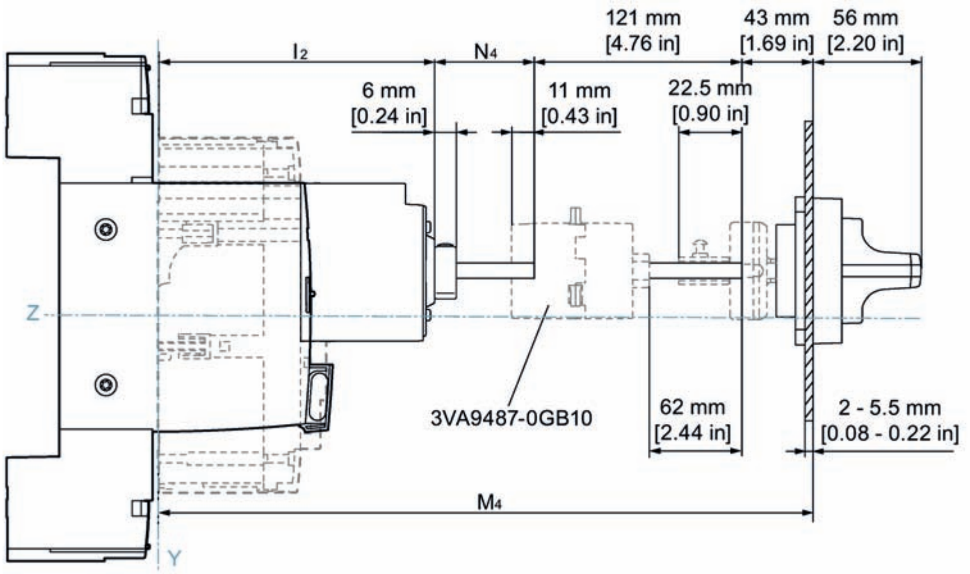

	3VA1	3VA2	
	100 / 160	100 / 160 / 250	400 / 630
l_2	119.1 mm [4.69 in]	141.1 mm [5.56 in]	165 mm [6.50 in]
M_{4min}	312.1 mm [12.29 in]	334.1 mm [13.15 in]	358 mm [14.09 in]
M_{4max}	563.1 mm [22.17 in]	583 mm [22.95 in]	605 mm [23.82 in]
N_4	$M_4 - l_2$ – 164 mm [6.46 in]		

Door mounted rotary operator with variable depth adapter (3VA9..7 - 0FK61)

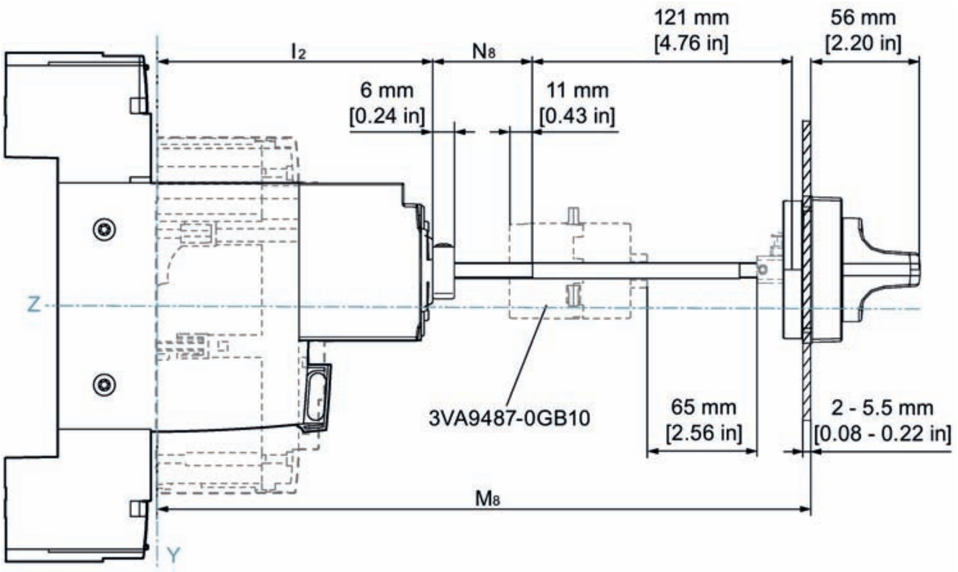

	3VA1	3VA2	
	100 / 160	100 / 160 / 250	400 / 630
I_2	119.1 mm [4.69 in]	141.1 mm [5.56 in]	165 mm [6.50 in]
M_{8min}	270 mm [10.63 in]	292 mm [11.50 in]	316 mm [12.44 in]
M_{8max}	521 mm [20.51 in]	541 mm [21.30 in]	563 mm [22.17 in]
N_8	$M_8 - I_2 - 126$ mm [4.96 in]		

Door mounted rotary operator for 3VA up to 1000 A

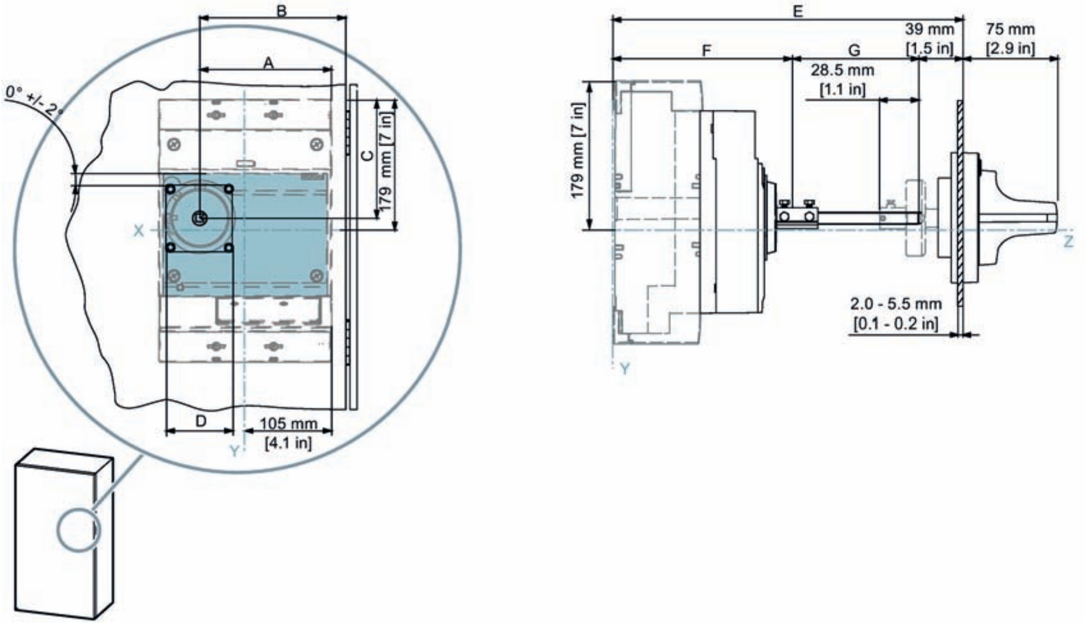

	3VA2 1000 A
A	160 mm [6.3 in]
B	≥ 80 mm [7.9 in]
C	145 mm [5.7 in]
D	100 mm [3.9 in]
E_{min}	290 mm [11.4 in]
E_{max}	555 mm [21.9 in]
F	198 mm [7.8 in]
G	E – 237 mm [9.3 in]

Supplementary handle for door mounted rotary operator

Supplementary handle for door mounted rotary operator 3VA9.87 - 0GC..

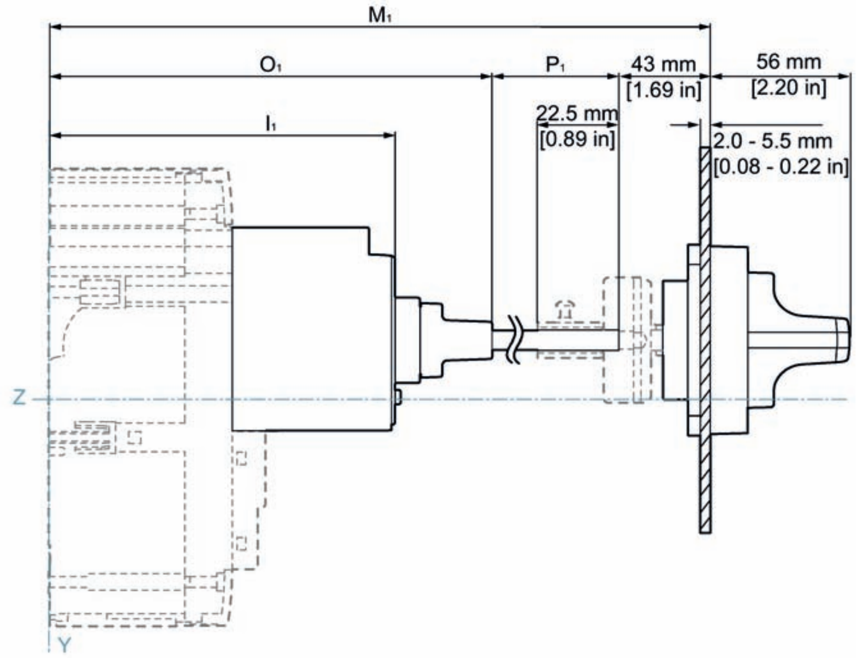

	3VA1			3VA2	
	100 / 160	250	400 / 630	100 / 160 / 250	400 / 630
I_1	116.6 mm [4.59 in]	114.5 mm [4.51 in]	160 mm [6.30 in]	136.1 mm [5.36 in]	160 mm [6.30 in]
M_{1min}	191.1 mm [7.52 in]	189.1 mm [7.44 in]	237 mm [9.33 in]	213.1 mm [8.39 in]	237 mm [9.33 in]
M_{1max}	440 mm [17.32 in]	438 mm [17.24 in]	483 mm [19.02 in]	460 mm [18.11 in]	483 mm [19.02 in]
O_1	158 mm [6.22 in]	156 mm [6.14 in]	201 mm [7.91 in]	177 mm [6.97 in]	201 mm [7.91 in]
P_{1min}	23 mm [0.91 in]				
P_{1max}	237 mm [9.33 in]				

Supplementary handle for door mounted rotary operator 3VA9.87 - 0GA80

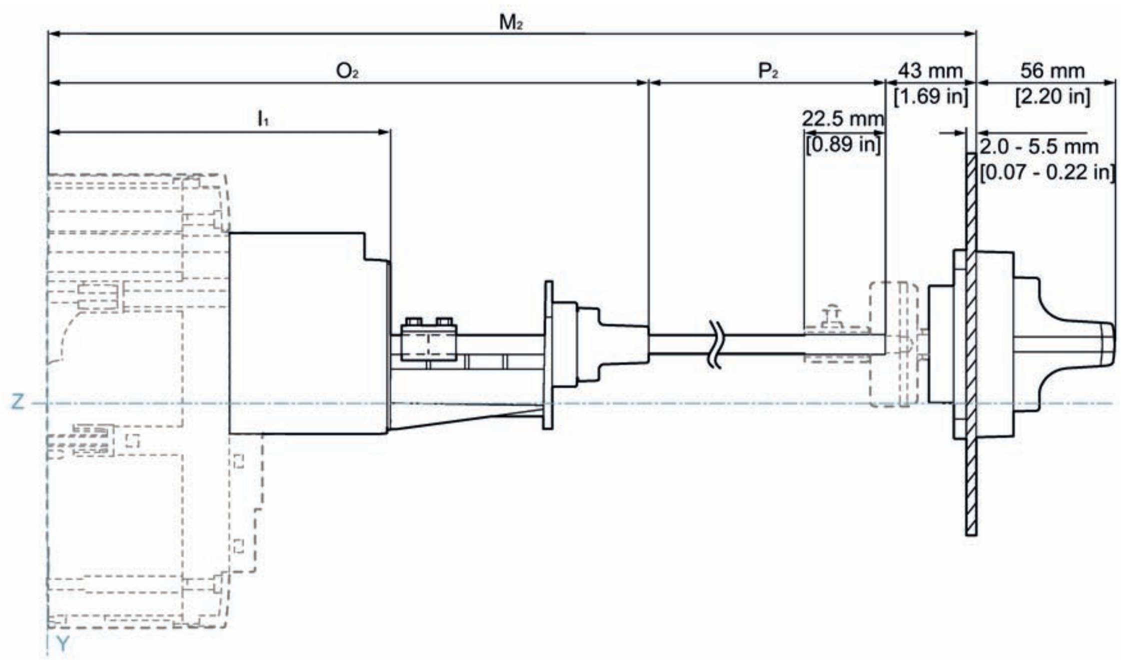

	3VA1			3VA2	
	100 / 160	250	400 / 630	100 / 160 / 250	400 / 630
I_1	116.6 mm [4.59 in]	114.5 mm [4.51 in]	160 mm [6.30 in]	136.1 mm [5.36 in]	160 mm [6.30 in]
M_{2min}	294 mm [11.57 in]	292 mm [11.50 in]	337 mm [13.27 in]	313 mm [12.32 in]	337 mm [13.27 in]
M_{2max}	784 mm [30.87 in]	782 mm [30.79 in]	828 mm [32.60 in]	803 mm [31.61 in]	828 mm [32.60 in]
O_2	225 mm [8.86 in]	223 mm [8.78 in]	268 mm [10.55 in]	244 mm [9.61 in]	268 mm [10.55 in]
P_{2min}	23 mm [0.91 in]				
P_{2max}	516 mm [20.31 in]				

Side wall mounted rotary operator

Side wall mounted rotary operator

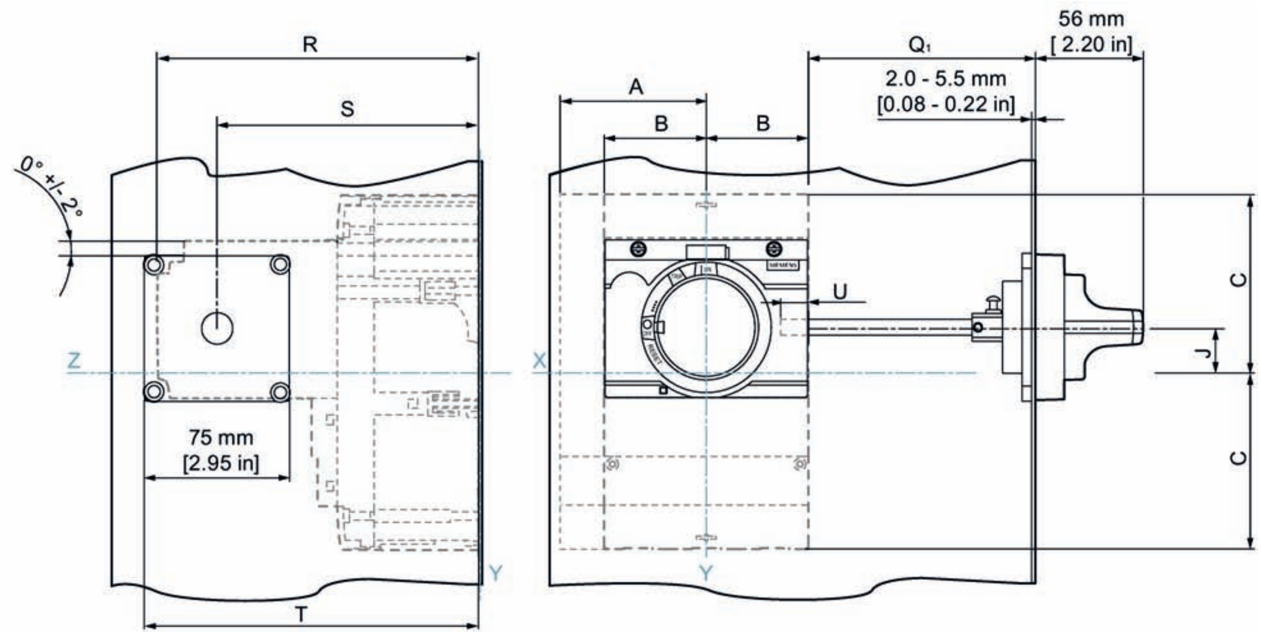

	3VA1			3VA2	
	100 / 160	250	400 / 630	100 / 160 / 250	400 / 630
A	63.5 mm [2.50 in]	87.5 mm [3.44 in]	115 mm [4.53 in]	87.5 mm [3.44 in]	115 mm [4.53 in]
B	38.1 mm [1.50 in]	52.5 mm [2.07 in]	69 mm [2.72 in]	52.5 mm [2.07 in]	69 mm [2.72 in]
C	65 mm [2.56 in]	79 mm [3.11 in]	124 mm [4.88 in]	90.5 mm [3.56 in]	124 mm [4.88 in]
J	0 mm [0.00 in]	4.6 mm [0.18 in]	27.5 mm [1.08 in]	22.9 mm [0.90 in]	27.5 mm [1.08 in]
Q_{1min}	28 mm [1.10 in]				
Q_{1max}	286 mm[11.26 in]	273 mm [10.75 in]	257 mm [10.12 in]	273 mm [10.75 in]	257 mm [10.12 in]
R	147 mm [5.79 in]	145 mm [5.71 in]	185 mm [7.28 in]	167 mm [6.57 in]	185 mm [7.28 in]
S	119 mm [4.69 in]	117 mm [4.61 in]	159 mm [6.26 in]	135 mm [5.31 in]	159 mm [6.26 in]
T	157 mm [6.18 in]	155 mm [6.10 in]	197 mm [7.76 in]	173 mm [6.81 in]	197 mm [7.76 in]
U	15 mm [0.59 in]	29.5 mm [1.16 in]	45 mm [1.77 in]	29.5 mm [1.16 in]	45 mm [1.77 in]

Side wall mounted rotary operator with mounting plate

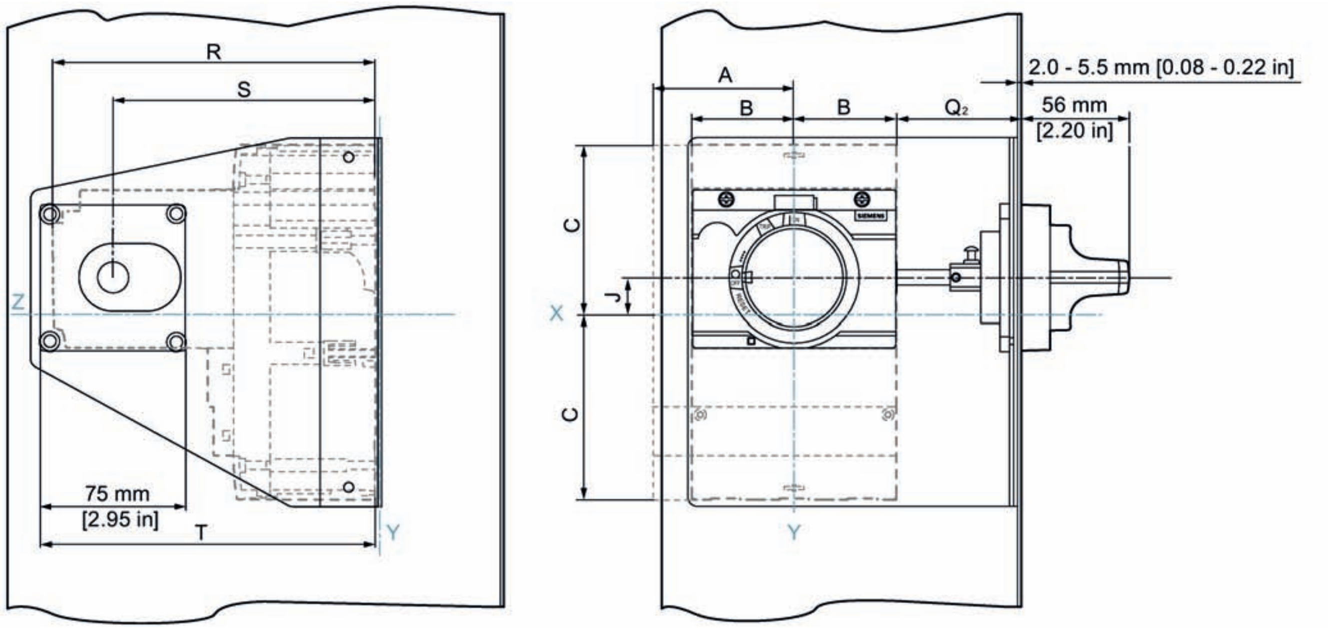

	3VA1		3VA2
	100 / 160	250	100 / 160 / 250
A	63.5 mm [2.50 in]	87.5 mm [3.44 in]	68
B	38.1 mm [1.50 in]	52.5 mm [2.07 in]	167
C	65 mm [2.56 in]	79 mm [3.11 in]	90.5 mm [3.56 in]
J	0 mm [0.00 in]	4.6 mm [0.18 in]	22.9 mm [0.90 in]
Q_2	42 mm [1.65 in]		45 mm [1.77 in]
R	147 mm[5.79 in]	145 mm [5.71 in]	167 mm [6.57 in]
S	119 mm [4.69 in]	117 mm [4.61 in]	135 mm [5.31 in]
T	157 mm [6.18 in]	155 mm [6.10 in]	173 mm [6.81 in]

Rotary operator with shaft stub

Rotary operator with shaft stub for 3VA up to 630 A

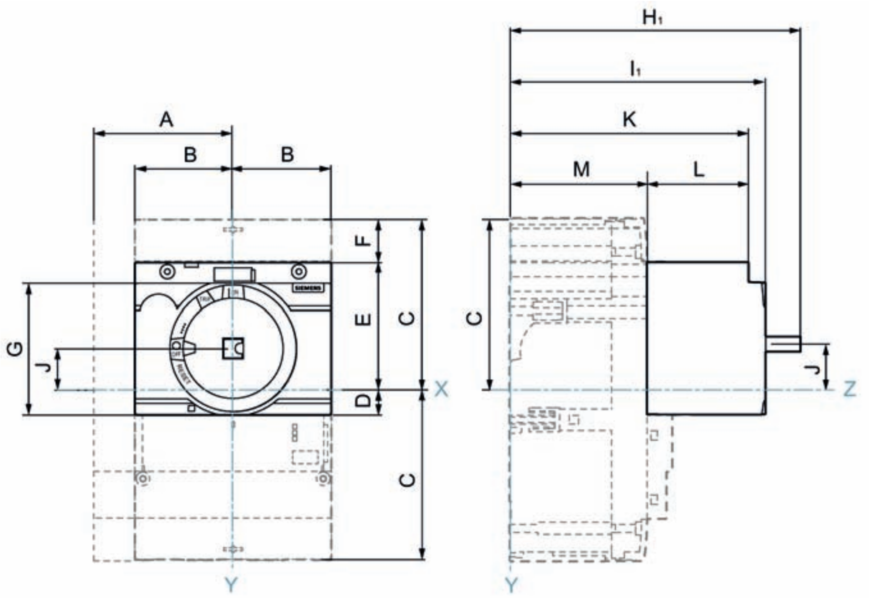

	3VA1			3VA2	
	100 / 160	250	400 / 630	100 / 160 / 250	400 / 630
A	63.5 mm [2.50 in]	87.5 mm [3.44 in]	115 mm [4.53 in]	87.5 mm [3.44 in]	115 mm [4.53 in]
B	38.1 mm [1.50 in]	52.5 mm [2.07 in]	69 mm [2.72 in]	52.5 mm [2.07 in]	69 mm [2.72 in]
C	65 mm [2.56 in]	79 mm [3.11 in]	124 mm [4.88 in]	90.5 mm [3.56 in]	124 mm [4.88 in]
D	22.6 mm [0.89 in]	18 mm [0.71 in]	8.5 mm [0.33 in]	13.1 mm [0.52 in]	8.5 mm [0.33 in]
E	47.4 mm [1.87 in]	57 mm [2.24 in]	84.9 mm [3.34in]	67.9 mm [2.67 in]	84.9 mm [3.34in]
F	17.6 mm [0.69 in]	22 mm [0.87]	39 mm [1.54 in]	22.6 mm [0.89 in]	39 mm [1.54 in]
G	45 mm [1.77 in]		70 mm [2.76 in]		
H_1	141 mm [5.55 in]	138 mm [5.43 in]	185 mm [7.28 in]	160 mm [6.30 in]	185 mm [7.28 in]
I_1	116.6 mm [4.59 in]	114.5 mm [4.51 in]	160 mm [6.30 in]	136.1 mm [5.36 in]	160 mm [6.30 in]
J	0 mm [0.00 in]	4.6 mm [0.18 in]	27.5 mm [1.08 in]	22.9 mm [0.90 in]	27.5 mm [1.08 in]
K	111 mm [4.37 in]	109 mm [4.29 in]	151 mm [5.94 in]	127 mm [5.00 in]	151 mm [5.94 in]
L	46 mm [1.81 in]		57 mm [2.24 in]	54 mm [2.13 in]	57 mm [2.24 in]
M	65 mm [2.56 in]	63 mm [2.48 in]	94 mm [3.70 in]	73 mm [2.87 in]	94 mm [3.70 in]

Rotary operator with shaft stub for 3VA up to 1000 A

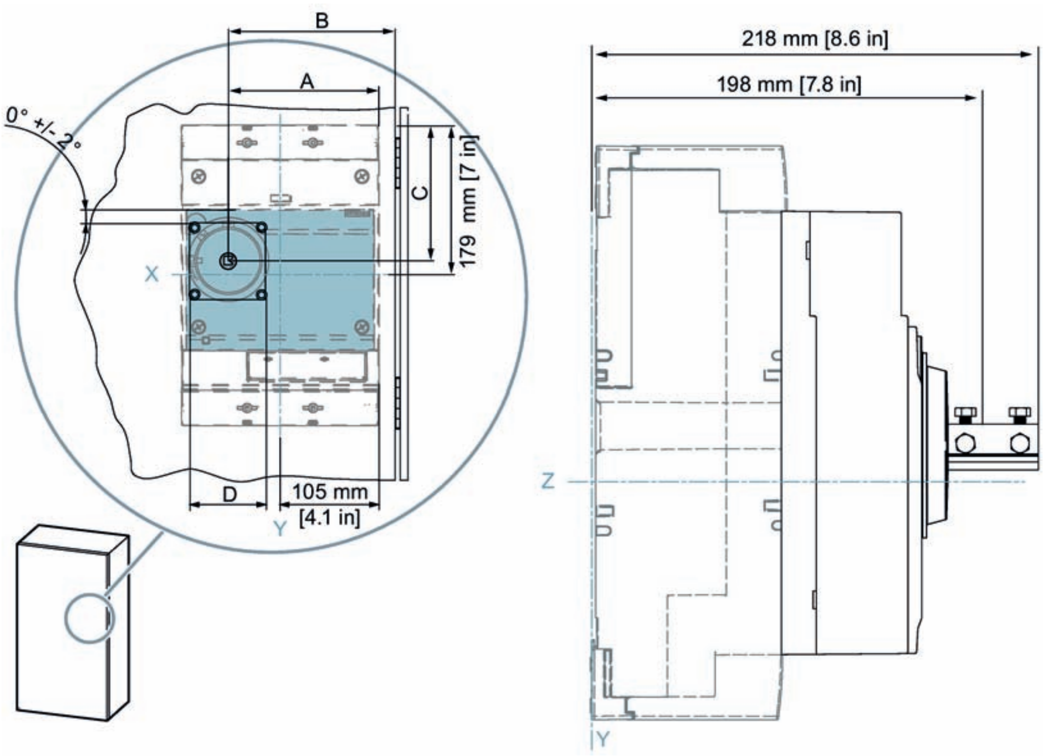

	3VA2 1000 A
A	160 mm [6.3 in]
B	≥ 80 mm [7.9 in]
C	145 mm [5.7 in]
D	100 mm [3.9 in]

6.2.2.4 Motor operators

MO310 motor operator

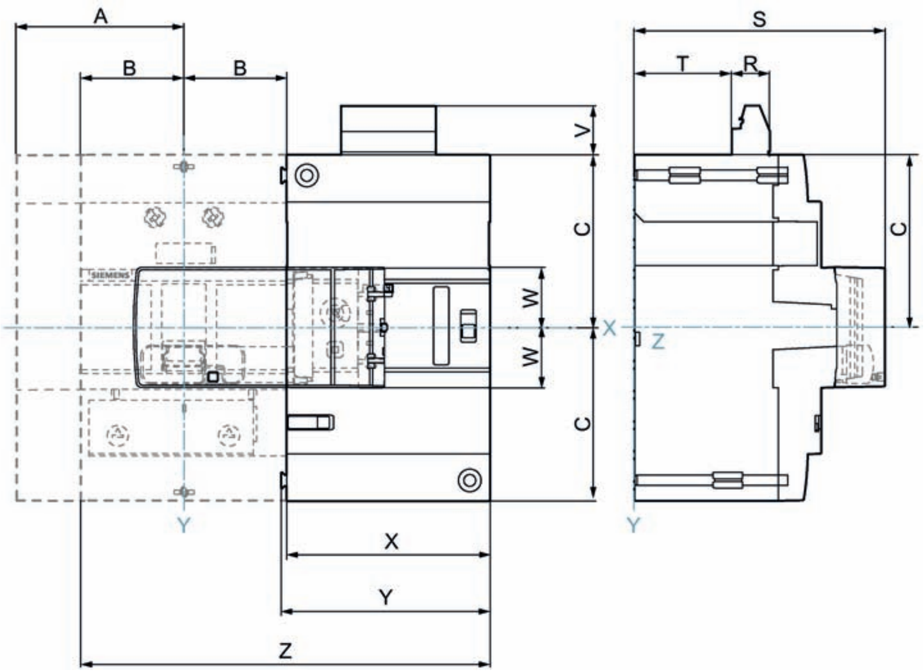

	3VA1 100 / 160
A	101.6 mm [4.00 in]
B	76.2 mm [3.00 in]
C	65 mm [2.56 in]
M	114.5 mm [4.51 in]
N	64 mm [2.52 in]
R	14.1 mm [0.56 in]
S	93.8 mm [3.69 in]
T	37.9 mm [1.49 in]
V	19 mm [0.75 in]
W	22.5 mm [0.89 in]
X	76.2 mm [3.00 in]
Y	78.3 mm [3.08 in]
Z	152.4 mm [6.00 in]

MO320 motor operator

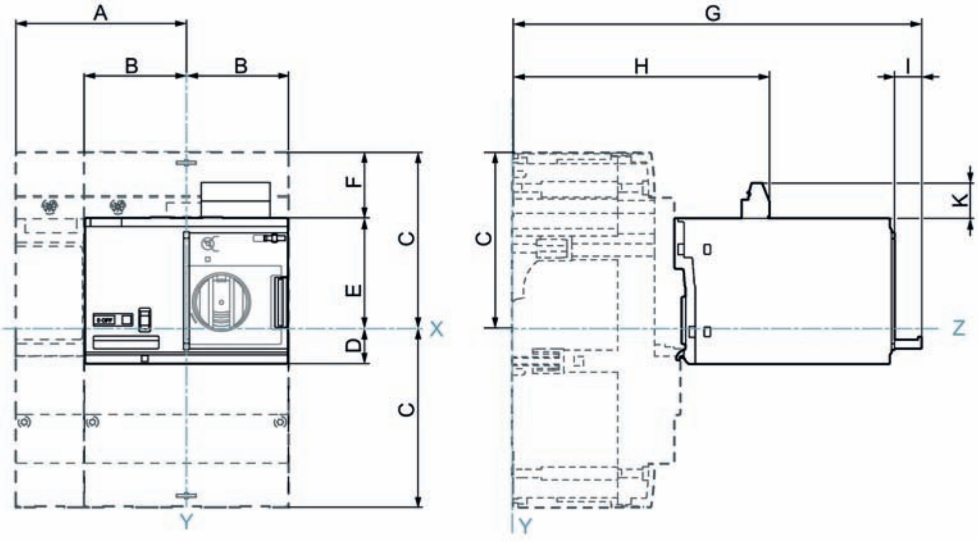

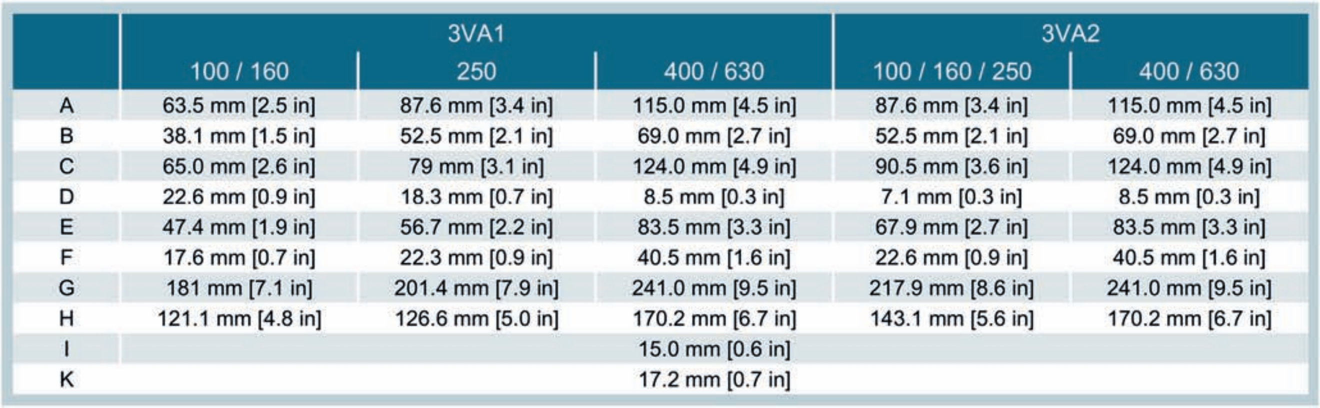

	3VA1			3VA2	
	100 / 160	250	400 / 630	100 / 160 / 250	400 / 630
A	63.5 mm [2.5 in]	87.6 mm [3.4 in]	115.0 mm [4.5 in]	87.6 mm [3.4 in]	115.0 mm [4.5 in]
B	38.1 mm [1.5 in]	52.5 mm [2.1 in]	69.0 mm [2.7 in]	52.5 mm [2.1 in]	69.0 mm [2.7 in]
C	65.0 mm [2.6 in]	79 mm [3.1 in]	124.0 mm [4.9 in]	90.5 mm [3.6 in]	124.0 mm [4.9 in]
D	22.6 mm [0.9 in]	18.3 mm [0.7 in]	8.5 mm [0.3 in]	7.1 mm [0.3 in]	8.5 mm [0.3 in]
E	47.4 mm [1.9 in]	56.7 mm [2.2 in]	83.5 mm [3.3 in]	67.9 mm [2.7 in]	83.5 mm [3.3 in]
F	17.6 mm [0.7 in]	22.3 mm [0.9 in]	40.5 mm [1.6 in]	22.6 mm [0.9 in]	40.5 mm [1.6 in]
G	181 mm [7.1 in]	201.4 mm [7.9 in]	241.0 mm [9.5 in]	217.9 mm [8.6 in]	241.0 mm [9.5 in]
H	121.1 mm [4.8 in]	126.6 mm [5.0 in]	170.2 mm [6.7 in]	143.1 mm [5.6 in]	170.2 mm [6.7 in]
I	15.0 mm [0.6 in]				
K	17.2 mm [0.7 in]				

SEO520 motor operator with stored energy operator

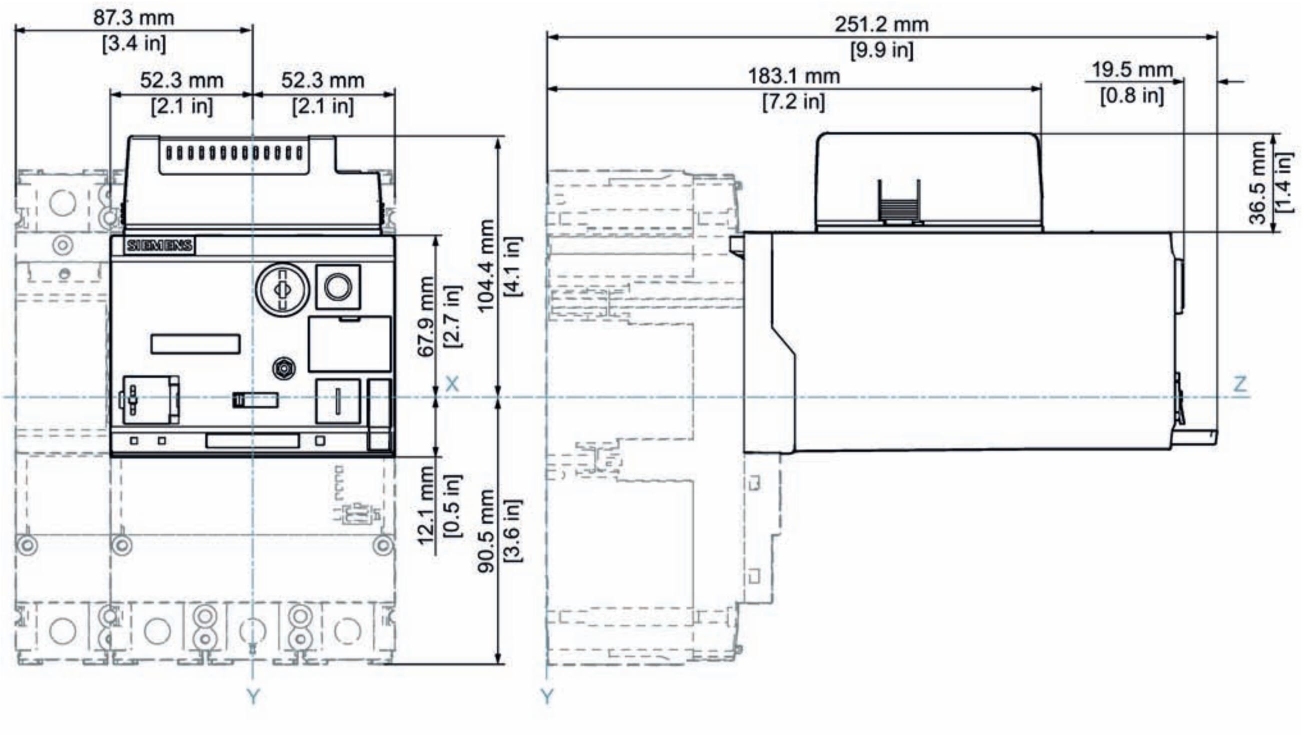

6.2.2.5 Accessories for locking, blocking and interlocking

Padlock device for handle

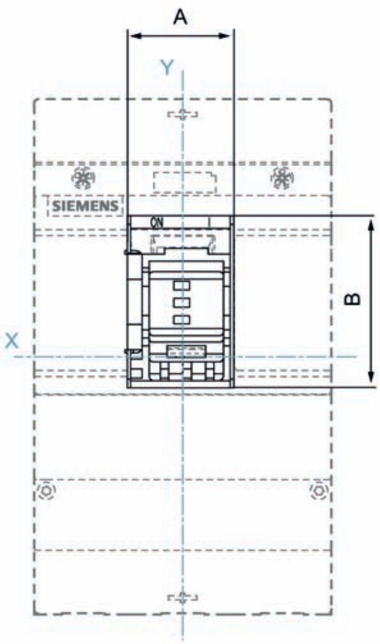

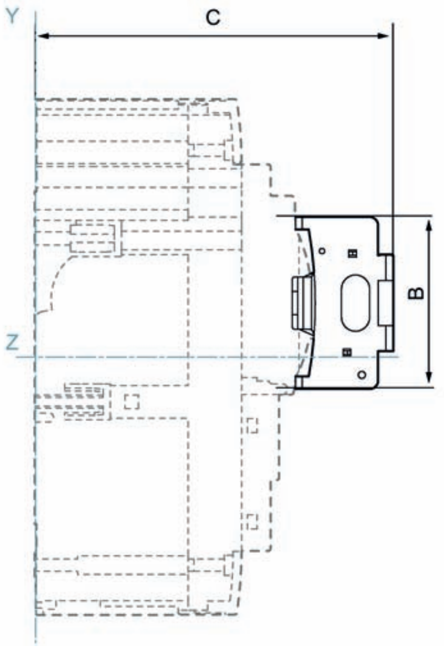

	3VA1		3VA2	
	100 / 160 / 250	400 / 630	100 / 160 / 250	400 / 630
A	29 mm [1.1 in]	39 mm [1.5 in]	39 mm [1.5 in]	
B	45 mm [1.7 in]	61 mm [2.4 in]	61 mm [2.4 in]	
C	108 mm [4.3 in]	151 mm [5.9 in]	127 mm [5 in]	151 mm [5.9 in]

Locking, blocking or interlocking with cylinder lock

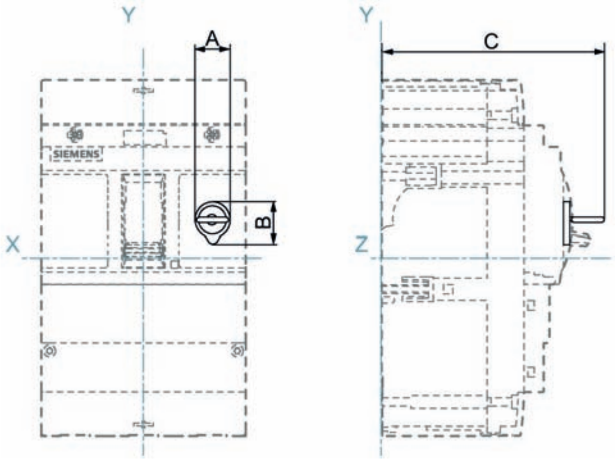

	3VA1		3VA2	
	100 / 160 / 250	400 / 630	100 / 160 / 250	400 / 630
A	20 mm [0.8 in]			
B	23 mm [0.9 in]			
C	104.8 mm [4.1 in]	146 mm [5.7 in]	122 mm [4.8 in]	146 mm [5.7 in]

Cable interlock module using a Bowden cable

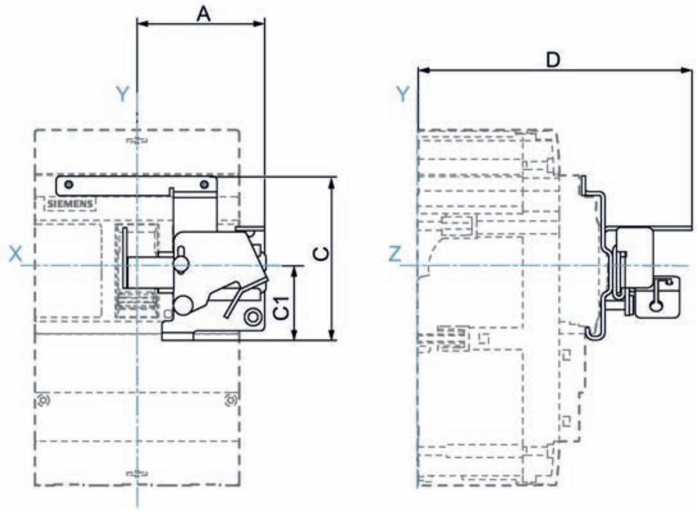

	3VA1			3VA2	
	100 / 160	250	400 / 630	100 / 160 / 250	400 / 630
A	59.7 mm [2.40 in]	63.5 mm [2.50 in]	69.7 mm [2.70 in]	66.7 mm [2.60 in]	69.7 mm [2.70 in]
C	73.5 mm [2.90 in]	80 mm [3.20 in]	97.5 mm [3.80 in]	85 mm [3.30 in]	97.5 mm [3.80 in]
C1	26 mm [1.00 in]	21 mm [0.80 in]	12.9 mm [0.50 in]	17 mm [0.70 in]	12.9 mm [0.50 in]
D	114 mm [4.50 in]		164.5 mm [6.50 in]	140.5 mm [5.50 in]	164.5 mm [6.50 in]

Handle blocking device

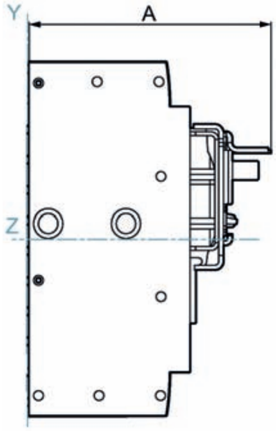

	3VA1			3VA2	
	100 / 160	250	400 / 630	100 / 160 / 250	400 / 630
A	105 mm [4.1 in]	125 mm [4.9 in]	150 mm [5.9 in]	150 mm [5.9 in]	

Rear interlock: Mounting on rear wall of panel, fixed-mounted

3VA up to 630 A

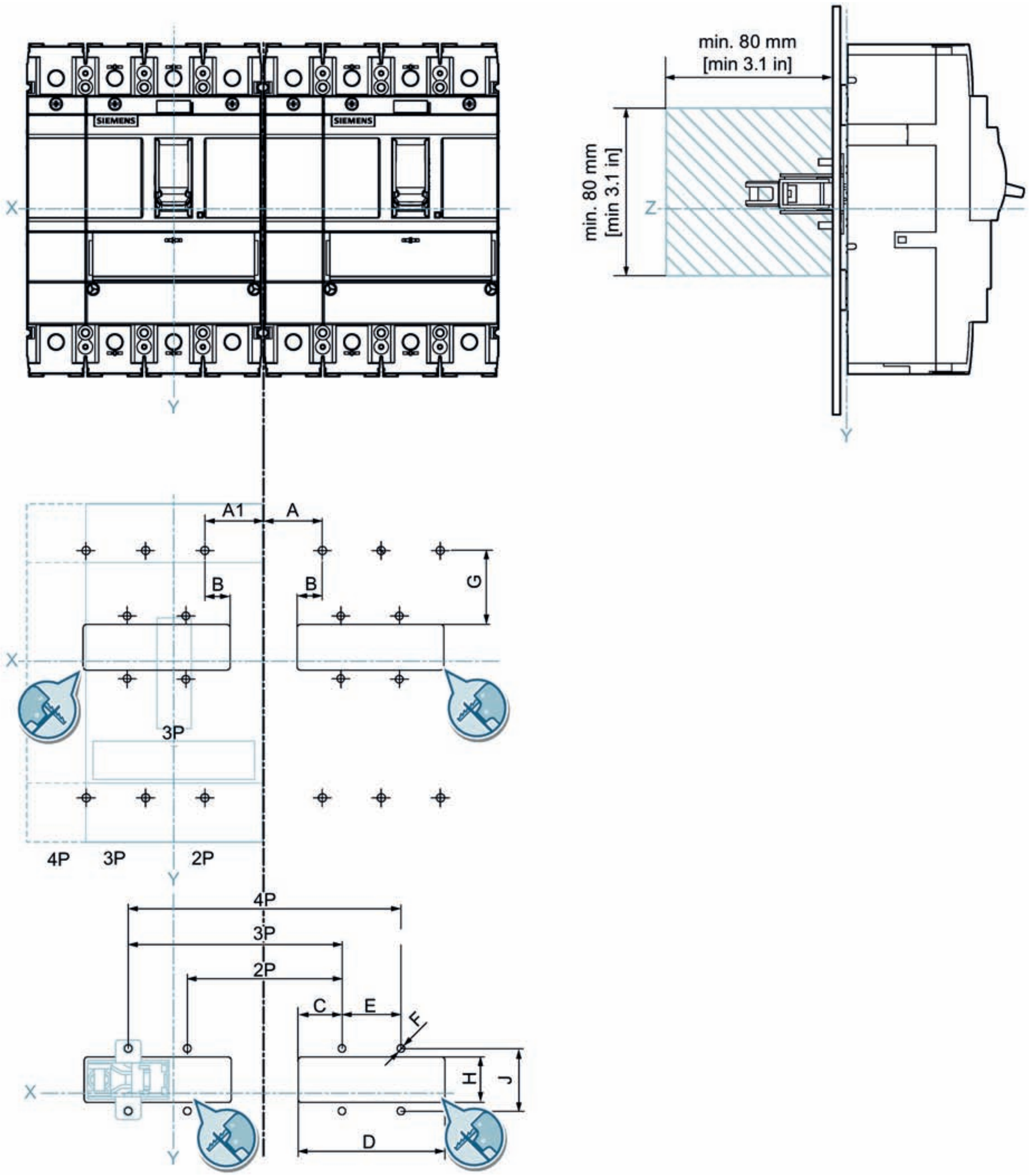

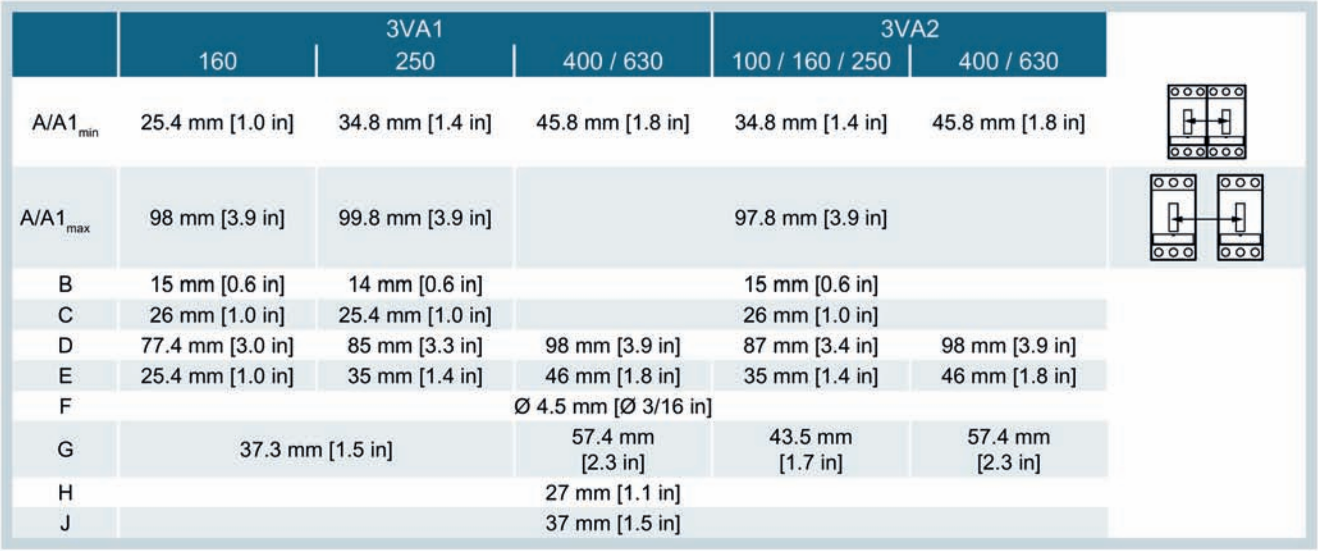

	3VA1			3VA2		
	160	250	400 / 630	100 / 160 / 250	400 / 630	
A/A1$_{min}$	25.4 mm [1.0 in]	34.8 mm [1.4 in]	45.8 mm [1.8 in]	34.8 mm [1.4 in]	45.8 mm [1.8 in]	
A/A1$_{max}$	98 mm [3.9 in]	99.8 mm [3.9 in]	97.8 mm [3.9 in]			
B	15 mm [0.6 in]	14 mm [0.6 in]	15 mm [0.6 in]			
C	26 mm [1.0 in]	25.4 mm [1.0 in]	26 mm [1.0 in]			
D	77.4 mm [3.0 in]	85 mm [3.3 in]	98 mm [3.9 in]	87 mm [3.4 in]	98 mm [3.9 in]	
E	25.4 mm [1.0 in]	35 mm [1.4 in]	46 mm [1.8 in]	35 mm [1.4 in]	46 mm [1.8 in]	
F	Ø 4.5 mm [Ø 3/16 in]					
G	37.3 mm [1.5 in]		57.4 mm [2.3 in]	43.5 mm [1.7 in]	57.4 mm [2.3 in]	
H	27 mm [1.1 in]					
J	37 mm [1.5 in]					

Rear interlock: Mounting with mounting plate and profile rail

3VA up to 630 A

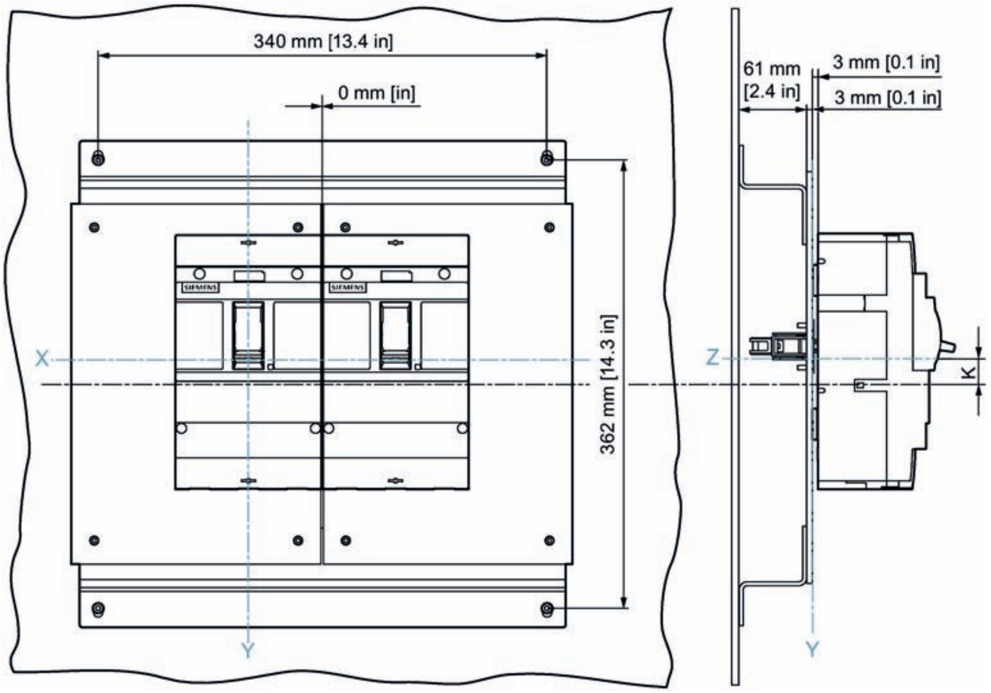

	3VA1			3VA2	
	160	250	400 / 630	100 / 160 / 250	400 / 630
K	25 mm [1 in]	25 mm [1 in]	1.5 mm [0.06 in]	3 mm [0.1 in]	1.5 mm [0.06 in]

3VA up to 1000 A

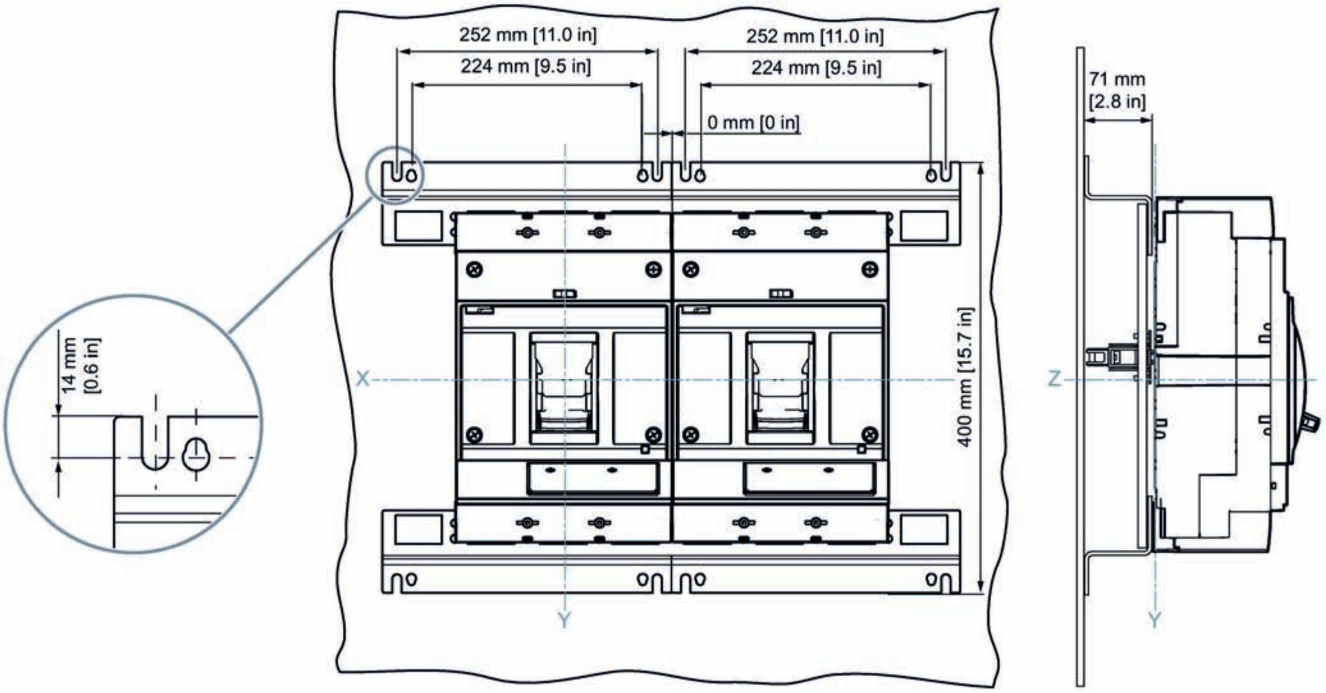

Rear interlock: Mounting on rear wall of panel, plug-in technology

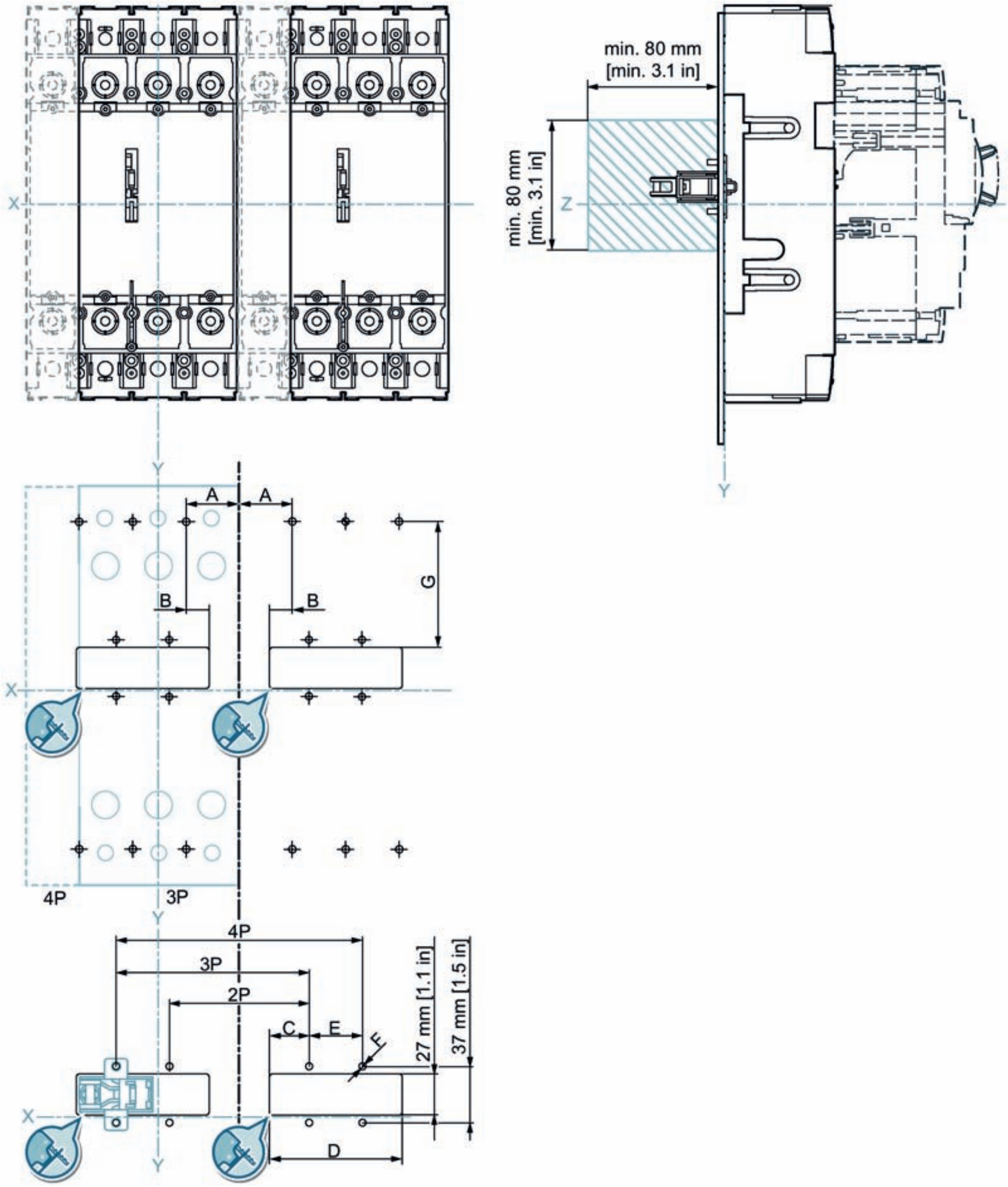

	3VA1			3VA2			
	160	250	400 / 630	100 / 160 / 250	400 / 630		
A_{min}	25.4 mm [1.0 in]	34.8 mm [1.4 in]	45.8 mm [1.8 in]	34.8 mm [1.4 in]	45.8 mm [1.8 in]	Plug IN 3VA9 … - 0KP00	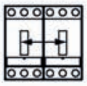
A_{max}	98 mm [3.9 in]	99.8 mm [3.9 in]	97.8 mm [3.9 in]			Plug IN 3VA9 … - 0KP00	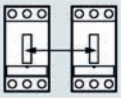
B	15 mm [0.6 in]	14 mm [0.6 in]	15 mm [0.6 in]				
C	26 mm [1.0 in]	25.4 mm [0.1 in]		26 mm [1.0 in]			
D	98 mm [3.9 in]						
E	25.4 mm [1.0 in]	35 mm [1.4 in]	46 mm [1.8 in]	35 mm [1.4 in]	46 mm [1.8 in]		
F	Ø 4.5 mm [Ø 3/16 in]						
G	60.3 mm [2.4 in]	68.3 mm [2.7 in]	96.9 mm [3.8 in]	75 mm [3.0 in]	96.9 mm [3.8 in]		

Rear interlock: Mounting on rear wall of panel, draw-out technology

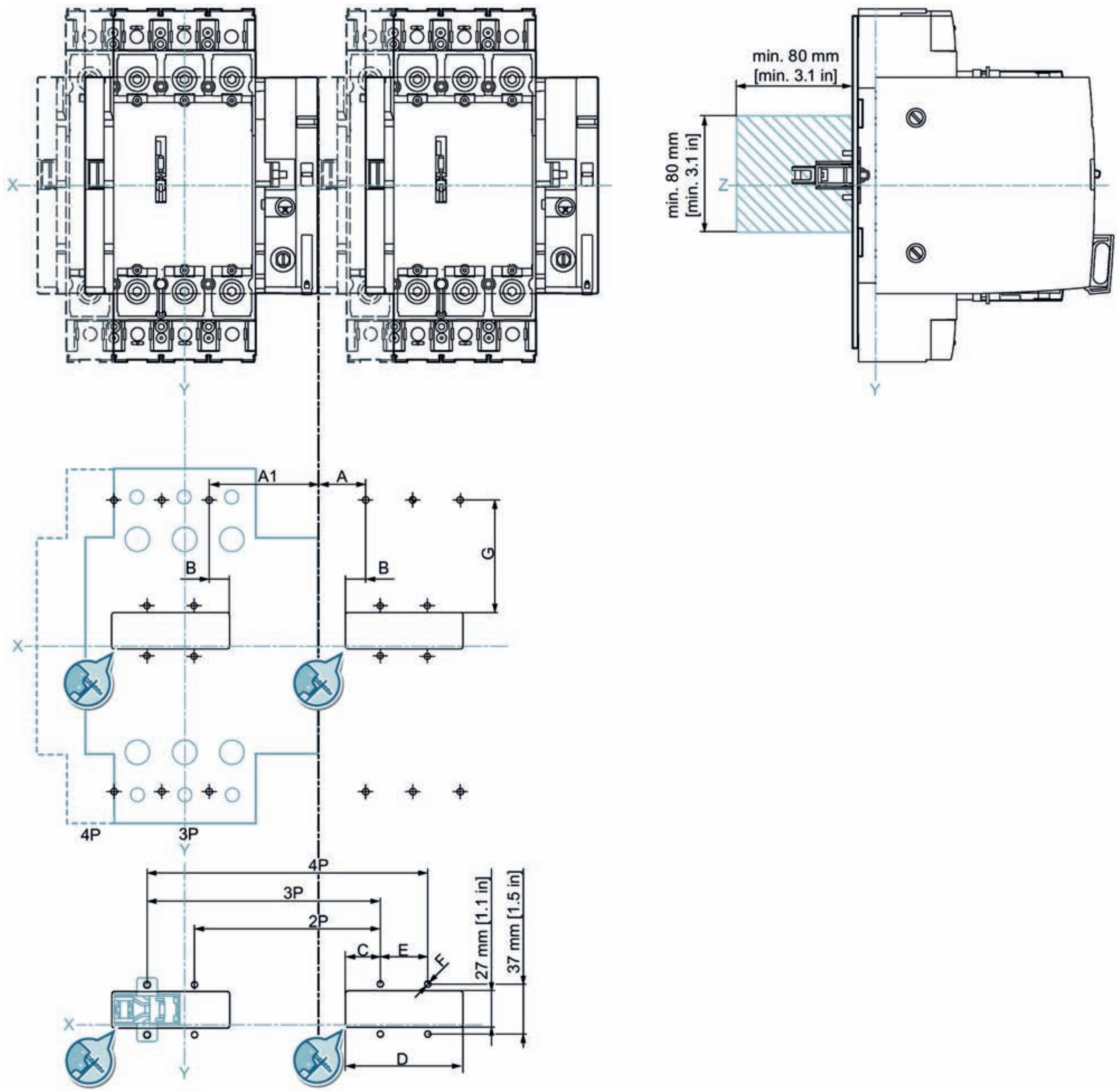

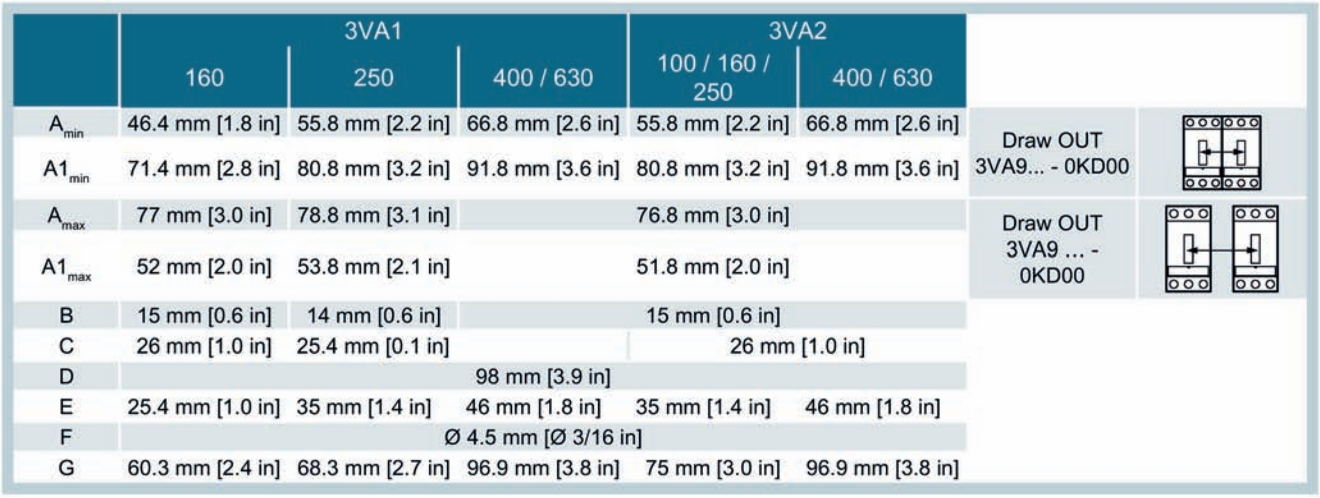

	3VA1			3VA2			
	160	250	400 / 630	100 / 160 / 250	400 / 630		
A_{min}	46.4 mm [1.8 in]	55.8 mm [2.2 in]	66.8 mm [2.6 in]	55.8 mm [2.2 in]	66.8 mm [2.6 in]	Draw OUT 3VA9... - 0KD00	
$A1_{min}$	71.4 mm [2.8 in]	80.8 mm [3.2 in]	91.8 mm [3.6 in]	80.8 mm [3.2 in]	91.8 mm [3.6 in]		
A_{max}	77 mm [3.0 in]	78.8 mm [3.1 in]	76.8 mm [3.0 in]			Draw OUT 3VA9 ... - 0KD00	
$A1_{max}$	52 mm [2.0 in]	53.8 mm [2.1 in]	51.8 mm [2.0 in]				
B	15 mm [0.6 in]	14 mm [0.6 in]	15 mm [0.6 in]				
C	26 mm [1.0 in]	25.4 mm [0.1 in]		26 mm [1.0 in]			
D	98 mm [3.9 in]						
E	25.4 mm [1.0 in]	35 mm [1.4 in]	46 mm [1.8 in]	35 mm [1.4 in]	46 mm [1.8 in]		
F	Ø 4.5 mm [Ø 3/16 in]						
G	60.3 mm [2.4 in]	68.3 mm [2.7 in]	96.9 mm [3.8 in]	75 mm [3.0 in]	96.9 mm [3.8 in]		

6.2.2.6 Residual current devices

Side-mounted residual current devices Basic RCD310 and Basic RCD510

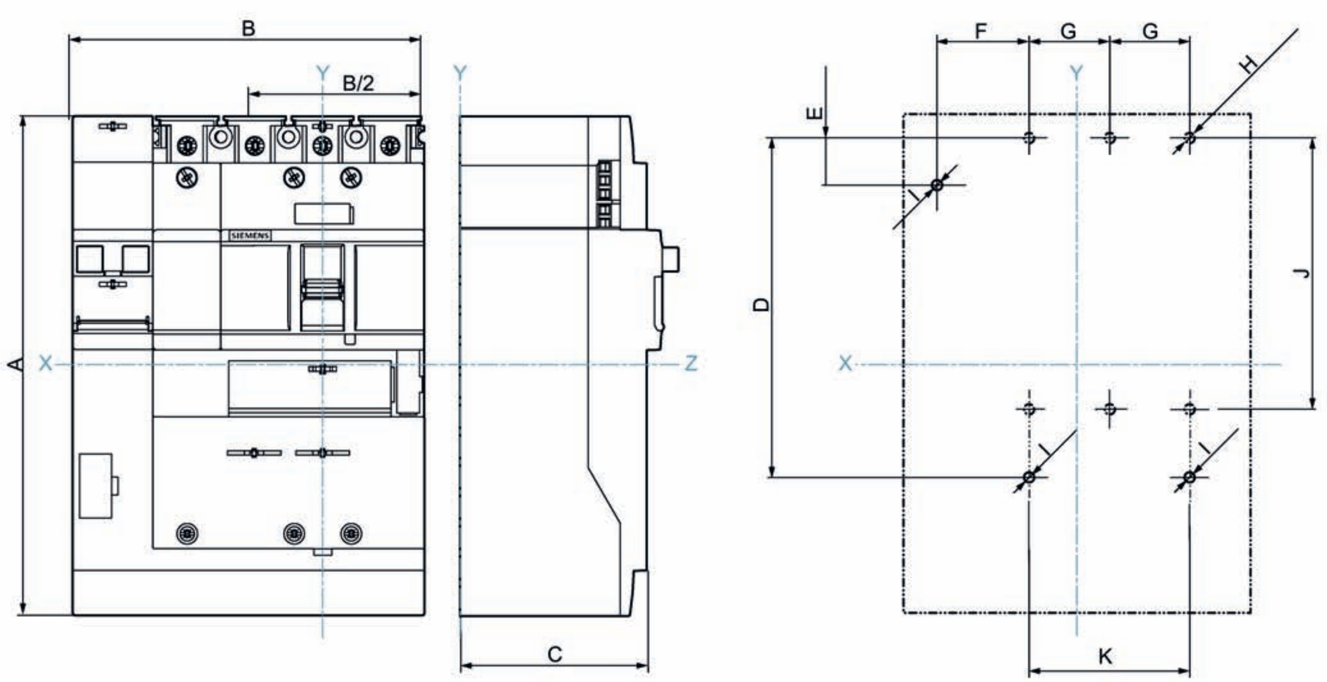

	3VA1 160; RCD 310 / 510		3VA1 250; RCD 510	
	3-polig	4-polig	3-polig	4-polig
A	187 mm [7.36 in]		228 mm [8.98 in]	
B	106.4 mm [4.19 in]	131.8 mm [5.19 in]	135 mm [5.31 in]	170 mm [6.69 in]
C	70 mm [2.76 in]			
D	129.2 mm [5.09 in]		147.75 mm [5.82 in]	
E	20.7 mm [0.81 in]		20.75 mm [0.82 in]	
F	35.6 mm [1.40 in]		45 mm [1.77 in]	
G	25.4 mm [1.0 in]		35 mm [1.38 in]	
H	4 X Ø 4.5 mm [4 X Ø 3/16 in] (MCCB)	6 X Ø 4.5 mm [6 X Ø 3/16 in] (MCCB)	4 X Ø 4.5 mm [4 X Ø 3/16 in] (MCCB)	6 X Ø 4.5 mm [6 X Ø 3/16 in] (MCCB)
I	Ø 3.5 mm [Ø 9/64"]			
J	114.5 mm [4.51 in]		123.5 mm [4.86 in]	
K		50.8 mm [2.0 in]		70 mm [2.76 in]

Loadside residual current devices Basic RCD320 and Basic RCD520

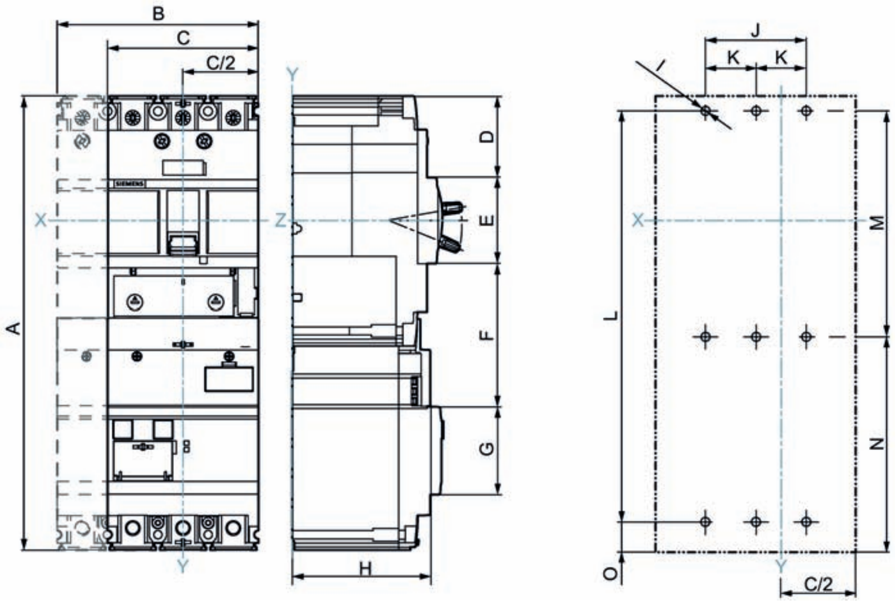

	3VA1 160; RCD320 / 520		3VA1 250; RCD520	
	3-pole	4-pole	3-pole	4-pole
A	230.1 mm [9.05 in]		273.2 mm [10.76 in]	
B	101.6 mm [4.0 in]			140 mm [5.51 in]
C	76.2 mm [3.0 in]		105 mm [4.13 in]	
C/2	38.25 mm [1,5 in]		52.5 mm [2.07 in]	
D	42.5 mm [1.67 in]		52 mm [2.05 in]	
E	45 mm [1.77 in]			
F	69.5 mm [2.74 in]		104 mm [4.09 in]	
G	45 mm [1.77 in]			
H	70 mm [2.76 in]			
I	∅ 4.5 mm [∅ 3/16 in]			
J		50.8 mm [2.0 in]		70 mm [2.76 in]
K	25.4 mm [1.0 in]		35 mm [1.38 in]	
L	214.6 mm [8.45 in]		238.7 mm [9.4 in]	
M	114.5 mm [4.51 in]		123.5 mm [4.86 in]	
N	107.85 mm [4.25 in]		132.45 mm [5.21 in]	
O	7.75 mm [0.31 in]		17.25 mm [0.68 in]	

Loadside residual current device Basic RCD520B

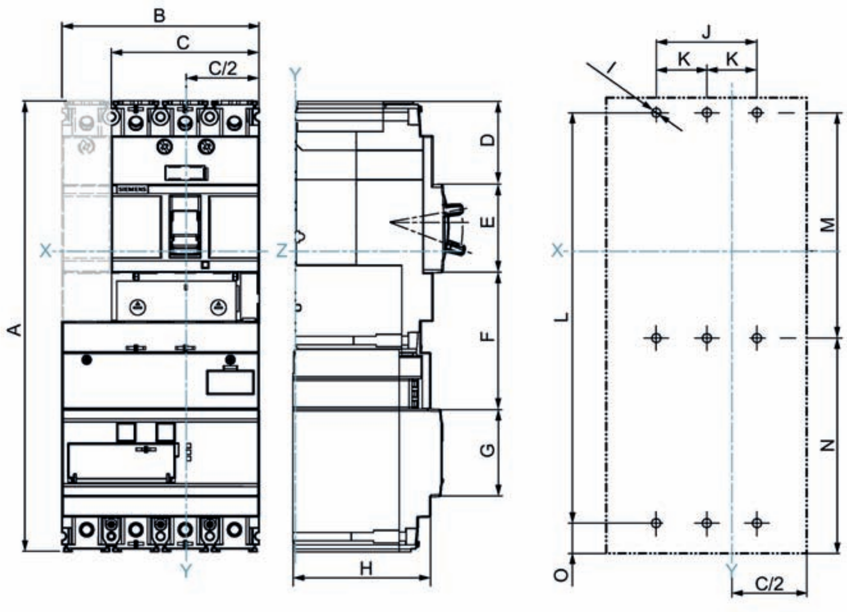

	3VA1 160; RCD520B
A	230.1 mm [9.05 in]
B	101.6 mm [4.0 in]
C	76.2 mm [3.0 in]
C/2	38.25 mm [1.51 in]
D	42.5 mm [1.67 in]
E	45 mm [1.77 in]
F	69.5 mm [2.74 in]
G	45 mm [1.77 in]
H	70 mm [2.76 in]
I	∅ 4.5 mm [∅ 3/16 in]
J	50.8 mm [2.0 in]
K	25.4 mm [1.0 in]
L	214.6 mm [8.45 in]
M	114.5 mm [4.51 in]
N	107.85 mm [4.25 in]
O	7.75 mm [0.31 in]

Loadside residual current device Advanced RCD820

With 3VA2 molded case circuit breaker sizes 100 A to 250 A

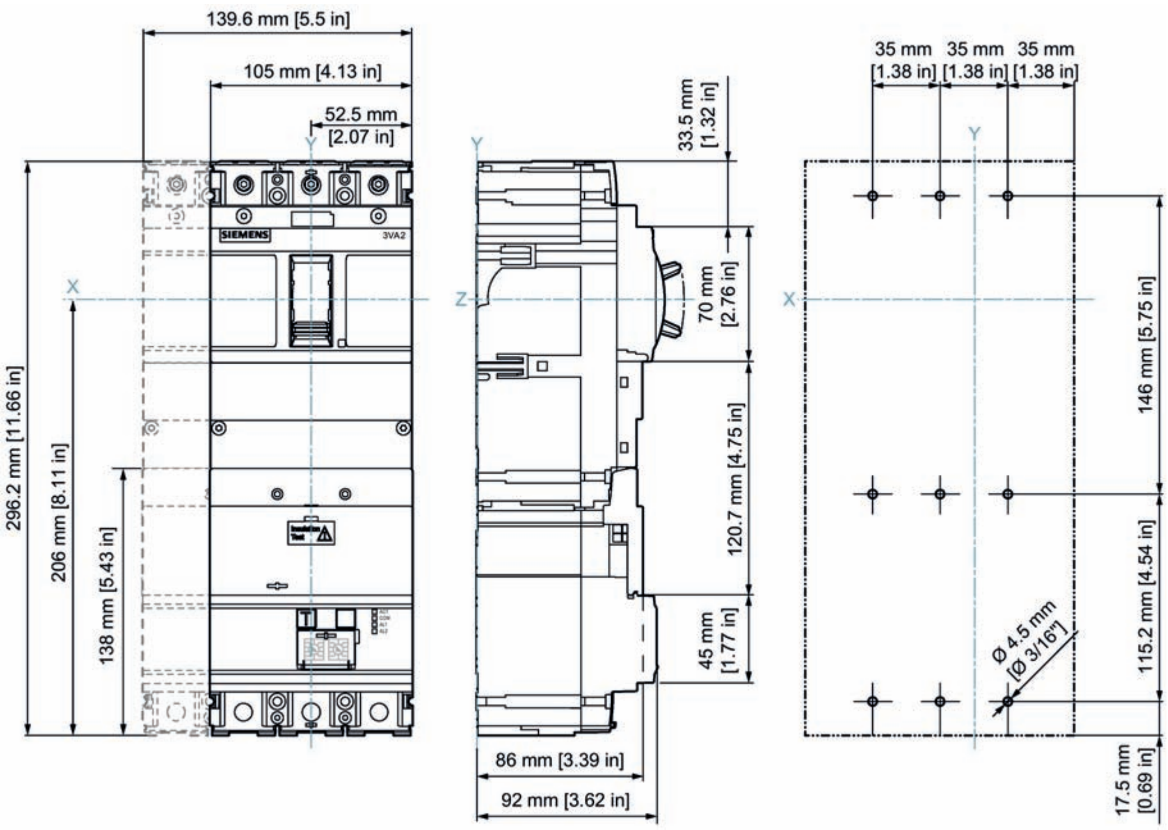

With 3VA2 molded case circuit breaker sizes 400 A to 630 A

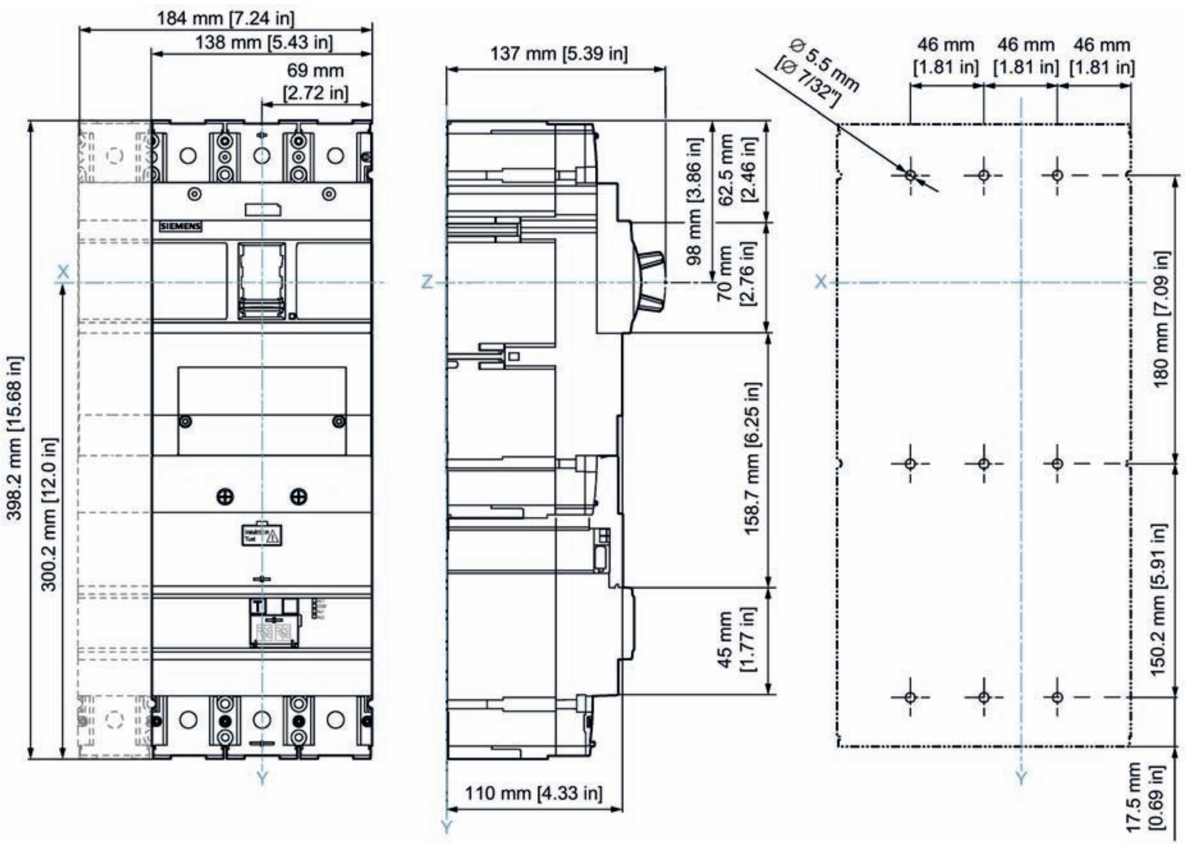

6.2.2.7 Communication and system integration

COM800 and COM100 breaker data server

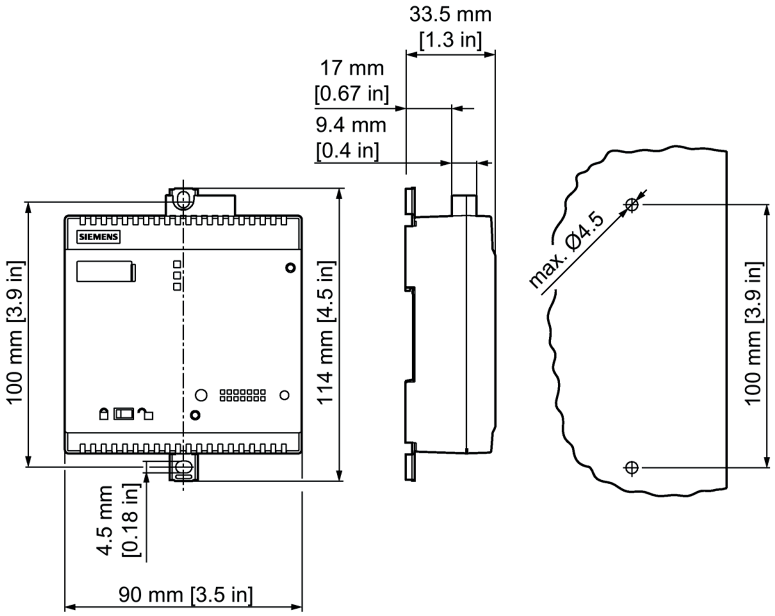

DSP800 display

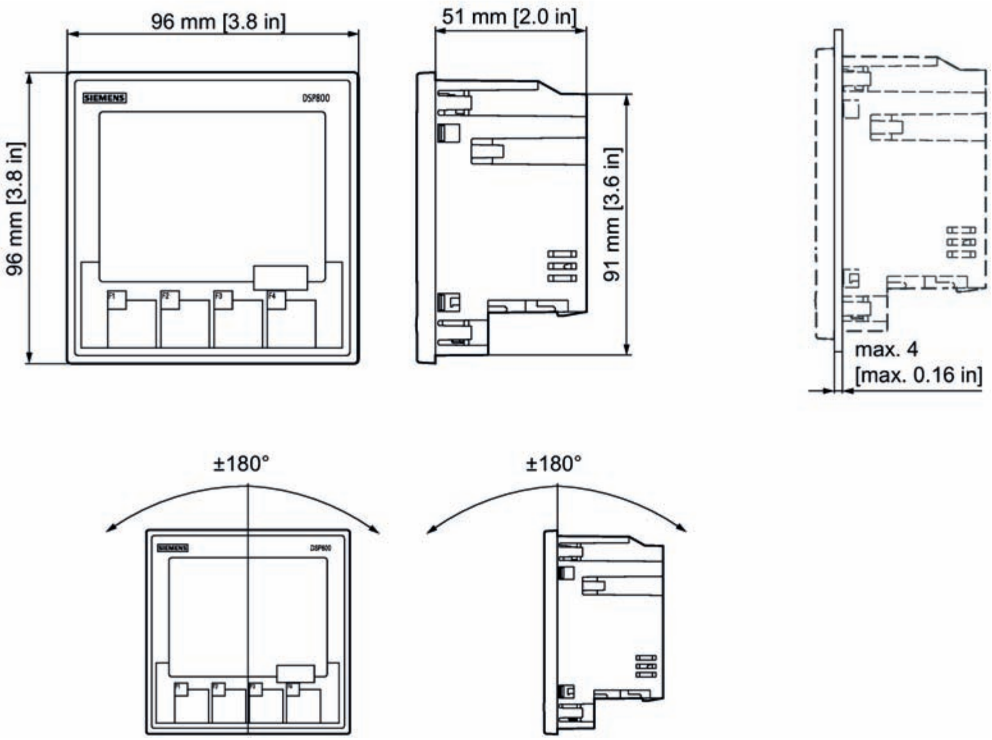

6.2.2.8 EFB300 external function box

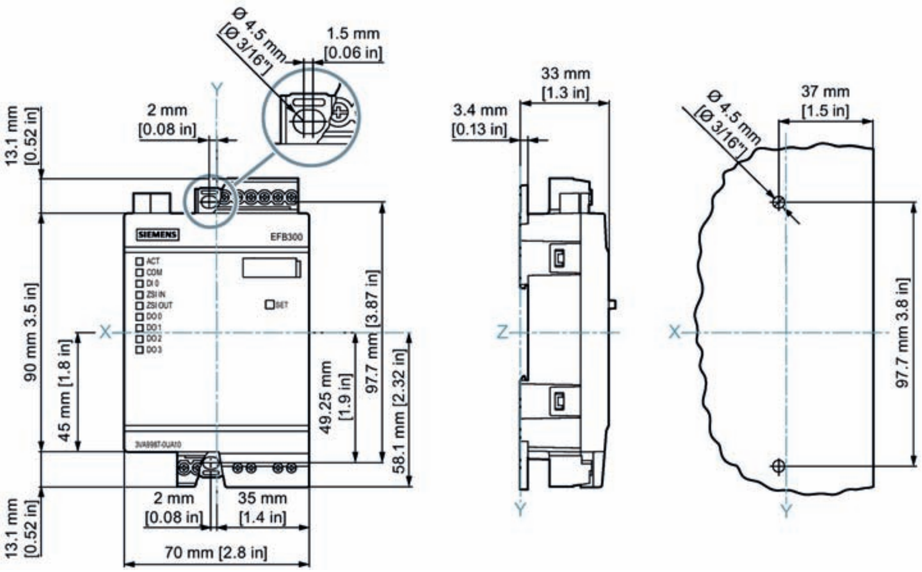

6.2.2.9 Test devices

TD300 activation and trip box

You can find more information in chapter Technical specifications of TD300 (Page 512).

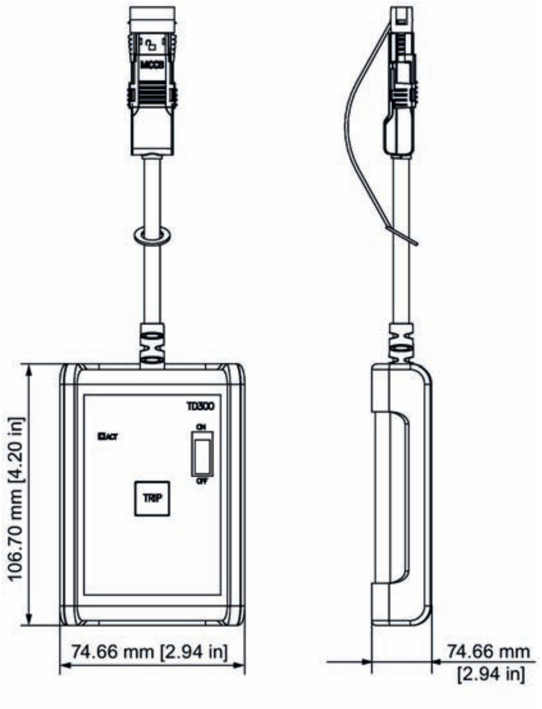

TD500 test device

You can find more information in chapter Technical specifications of TD500 (Page 524).

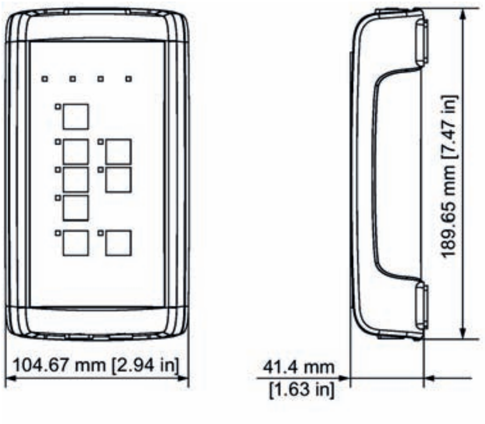

6.2.2.10 External current transformer for N conductor

Dimensions of external current transformer for front busbar connector up to 630 A

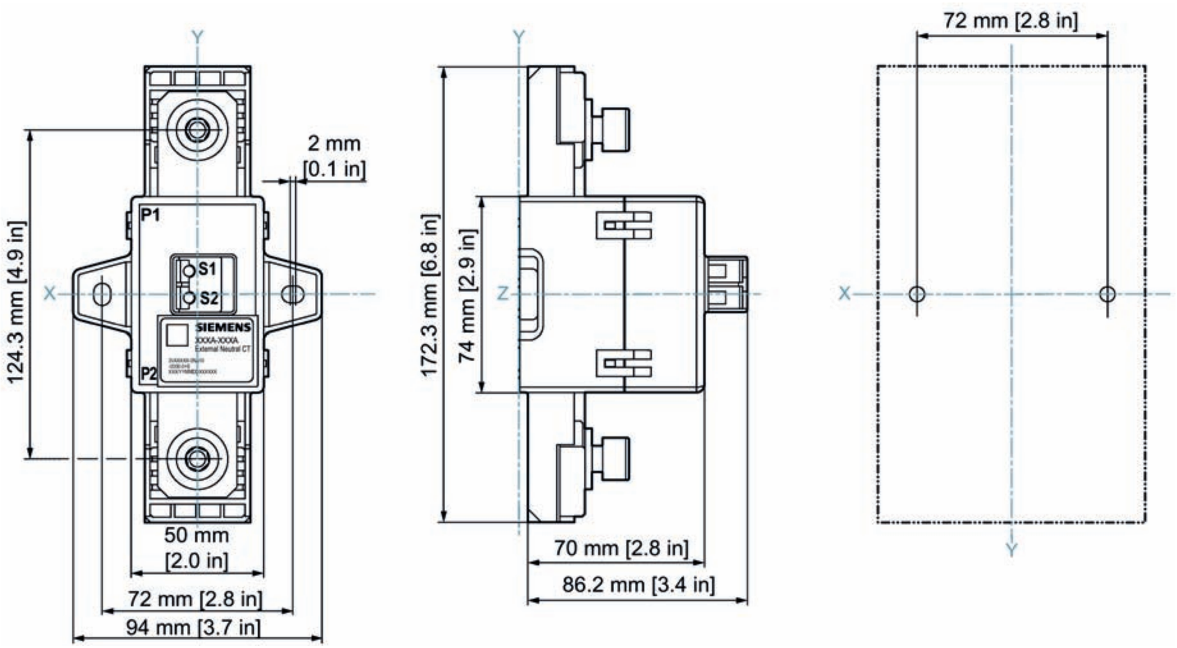

Dimensions of external current transformer as straight-through transformer up to 1250 A

Dimensions 25 ... 630 A

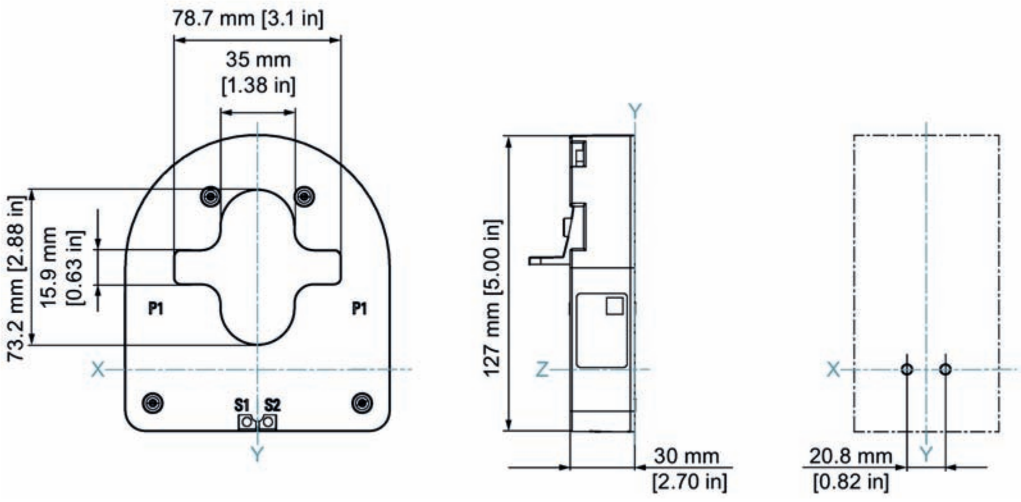

Dimensions 600 A … 1250 A

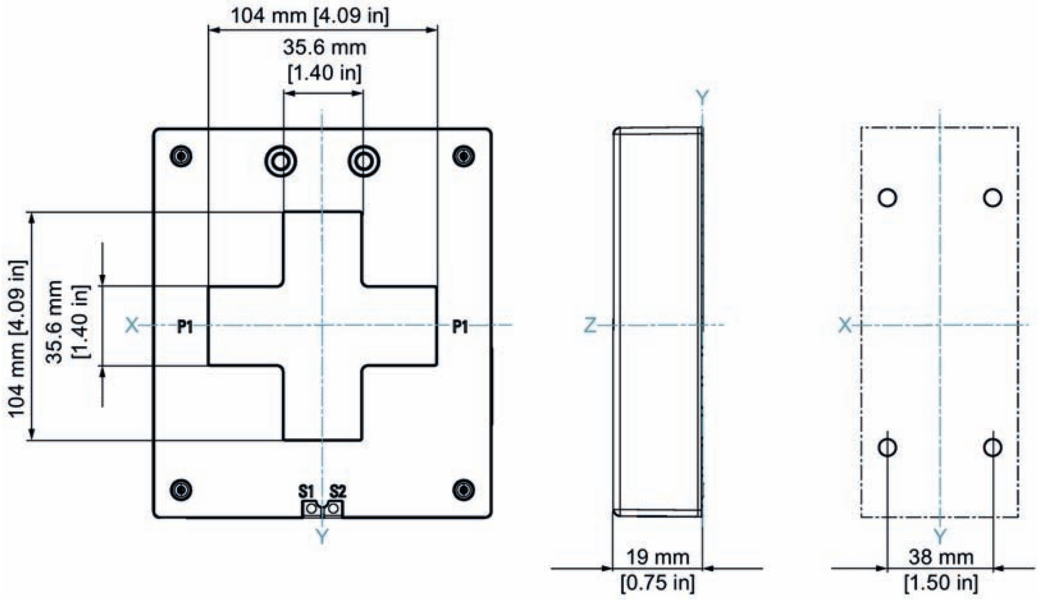

6.2.2.11 Escutcheon

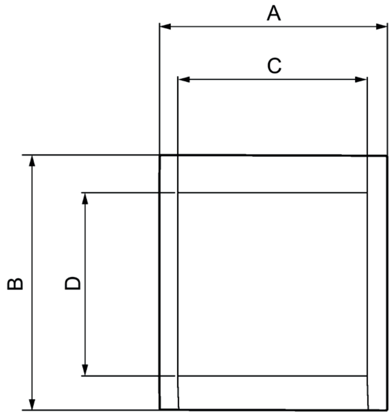

	A	B	C	D
3VA9053 - 0SB10	98.2 mm [3.9 in]	85.65 mm [3.4 in]	76.2 mm [3 in]	45.65 mm [1.8 in]
3VA9053 - 0SB20	98.2 mm [3.9 in]	110.7 mm [4.4 in]	76.2 mm [3 in]	70.7 mm [2.8 in]
3VA9054 - 0SB10	123.6 mm [4.9 in]	85.65 mm [3.4 in]	101.6 mm [4 in]	45.65 mm [1.8 in]
3VA9054 - 0SB20	123.6 mm [4.9 in]	110.7 mm [4.4 in]	101.6 mm [4 in]	70.7 mm [2.8 in]
3VA9163 - 0SB10	126.6 mm [5 in]	110.7 mm [4.4 in]	104.6 mm [4.1 in]	70.7 mm [2.8 in]
3VA9163 - 0SB20	126.6 mm [5 in]	140.8 mm [5.5 in]	104.6 mm [4.1 in]	100.8 mm [4 in]
3VA9164 - 0SB10	161.6 mm [6.4 in]	110.7 mm [4.4 in]	139.6 mm [5.5 in]	70.7 mm [2.8 in]
3VA9164 - 0SB20	161.6 mm [6.4 in]	140.8 mm [5.5 in]	139.6 mm [5.5 in]	100.8 mm [4 in]
3VA9167 - 0SB30	126.6 mm [5 in]	120.8 mm [4.8 in]	104.6 mm [4.1 in]	80.8 mm [3.2 in]
3VA9253 - 0SB10	126.6 mm [5 in]	85.65 mm [3.4 in]	104.6 mm [4.1 in]	45.65 mm [1.8 in]
3VA9253 - 0SB20	126.6 mm [5 in]	124.7 mm [4.9 in]	104.6 mm [4.1 in]	84.7 mm [3.3 in]
3VA9254 - 0SB10	161.6 mm [6.4 in]	85.65 mm [3.4 in]	139.6 mm [5.5 in]	45.65 mm [1.8 in]
3VA9254 - 0SB20	161.6 mm [6.4 in]	124.7 mm [4.9 in]	139.6 mm [5.5 in]	84.7 mm [3.3 in]
3VA9257 - 0SB30	126.6 mm [5 in]	115.8 mm [4.6 in]	104.6 mm [4.1 in]	75.8 mm [3 in]
3VA9303 - 0SB40	159.6 mm [6.3 in]	85.65 mm [3.4 in]	137.6 mm [5.4 in]	45.65 mm [1.8 in]
3VA9304 - 0SB40	205.6 mm [8.1 in]	85.65 mm [3.4 in]	183.6 mm [7.2 in]	45.65 mm [1.8 in]
3VA9353 - 0SB20	159.6 mm [6.3 in]	149.3 mm [5.9 in]	137.6 mm [5.4 in]	109.3 mm [4.3 in]
3VA9354 - 0SB20	205.6 mm [8.1 in]	149.3 mm [5.9 in]	183.6 mm [7.2 in]	109.3 mm [4.3 in]
3VA9363 - 0SB20	159.6 mm [6.3 in]	162.3 mm [6.4 in]	137.6 mm [5.4 in]	122.3 mm [4.8 in]
3VA9364 - 0SB20	205.6 mm [8.1 in]	162.3 mm [6.4 in]	183.6 mm [7.2 in]	122.3 mm [4.8 in]
3VA9383 - 0SB10	159.6 mm [6.3 in]	110.7 mm [4.4 in]	137.6 mm [5.4 in]	70.7 mm [2.8 in]
3VA9384 - 0SB10	205.6 mm [8.1 in]	110.7 mm [4.4 in]	183.6 mm [7.2 in]	70.7 mm [2.8 in]
3VA9387 - 0SB30	159.6 mm [6.3 in]	132.8 mm [5.2 in]	137.6 mm [5.4 in]	92.8 mm [3.7 in]
3VA9503 - 0SB10	222.3 mm [8.8 in]	190.8 mm [7.5 in]	200.3 mm [7.9 in]	150.8 mm [5.9 in]
3VA9503 - 0SB20	222.3 mm [8.8 in]	233.8 mm [9.2 in]	200.3 mm [7.9 in]	193.8 mm [7.6 in]
3VA9503 - 0SB50	222.3 mm [8.8 in]	240.8 mm [9.5 in]	200.8 mm [7.9 in]	200.8 mm [7.9 in]
3VA9504 - 0SB10	292.3 mm [11.5 in]	190.8 mm [7.5 in]	270.3 mm [10.6 in]	150.8 mm [5.9 in]
3VA9504 - 0SB20	292.3 mm [11.5 in]	233.8 mm [9.2 in]	270.3 mm [10.6 in]	193.8 mm [7.6 in]

6.3 Power losses

6.3.1 Power losses of 3VA1 molded case circuit breakers

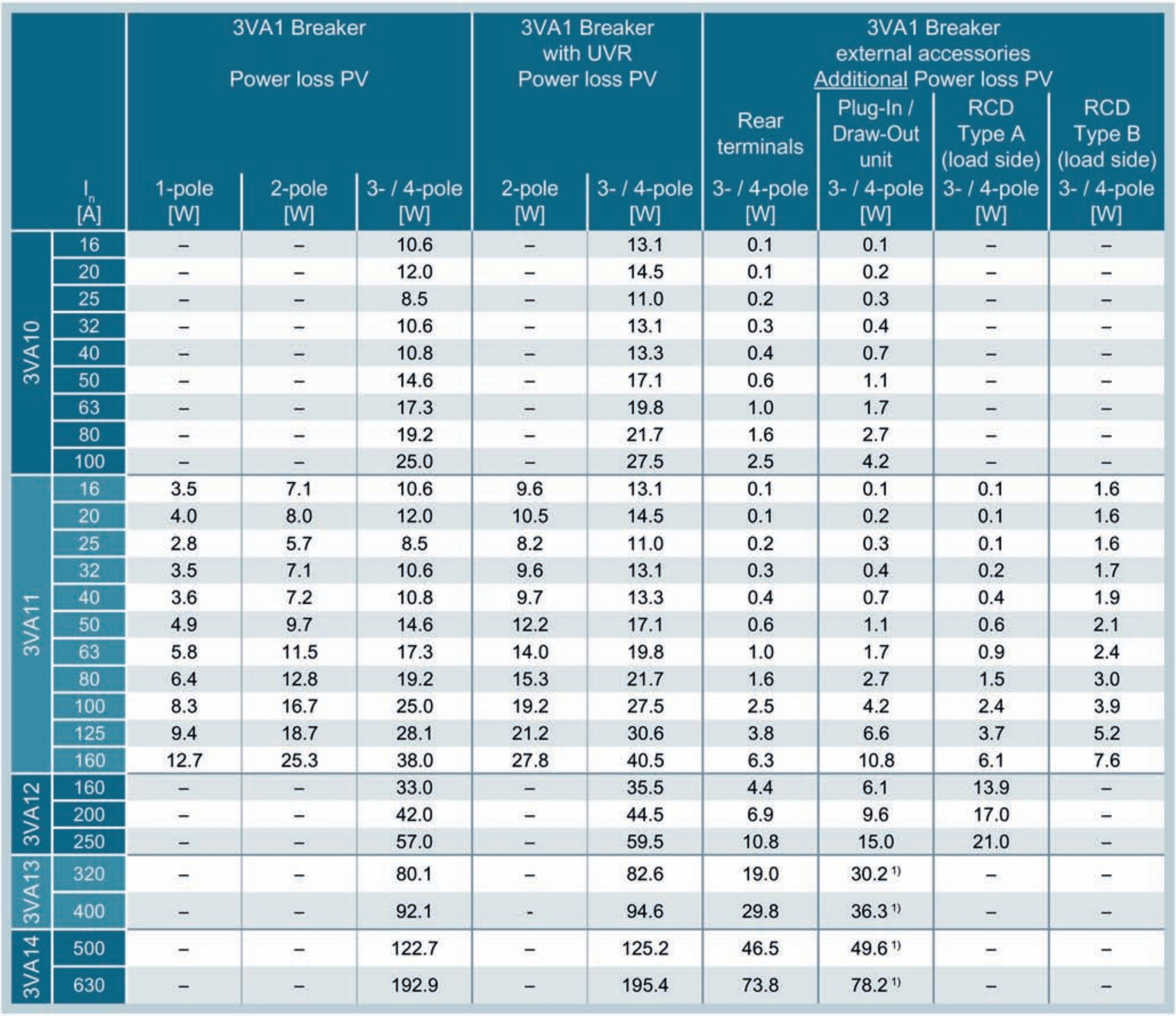

		3VA1 Breaker Power loss PV			3VA1 Breaker with UVR Power loss PV		3VA1 Breaker external accessories Additional Power loss PV			
							Rear terminals	Plug-In / Draw-Out unit	RCD Type A (load side)	RCD Type B (load side)
	I_n [A]	1-pole [W]	2-pole [W]	3- / 4-pole [W]	2-pole [W]	3- / 4-pole [W]	3- / 4-pole [W]	3- / 4-pole [W]	3- / 4-pole [W]	3- / 4-pole [W]
3VA10	16	–	–	10.6	–	13.1	0.1	0.1	–	–
	20	–	–	12.0	–	14.5	0.1	0.2	–	–
	25	–	–	8.5	–	11.0	0.2	0.3	–	–
	32	–	–	10.6	–	13.1	0.3	0.4	–	–
	40	–	–	10.8	–	13.3	0.4	0.7	–	–
	50	–	–	14.6	–	17.1	0.6	1.1	–	–
	63	–	–	17.3	–	19.8	1.0	1.7	–	–
	80	–	–	19.2	–	21.7	1.6	2.7	–	–
	100	–	–	25.0	–	27.5	2.5	4.2	–	–
3VA11	16	3.5	7.1	10.6	9.6	13.1	0.1	0.1	0.1	1.6
	20	4.0	8.0	12.0	10.5	14.5	0.1	0.2	0.1	1.6
	25	2.8	5.7	8.5	8.2	11.0	0.2	0.3	0.1	1.6
	32	3.5	7.1	10.6	9.6	13.1	0.3	0.4	0.2	1.7
	40	3.6	7.2	10.8	9.7	13.3	0.4	0.7	0.4	1.9
	50	4.9	9.7	14.6	12.2	17.1	0.6	1.1	0.6	2.1
	63	5.8	11.5	17.3	14.0	19.8	1.0	1.7	0.9	2.4
	80	6.4	12.8	19.2	15.3	21.7	1.6	2.7	1.5	3.0
	100	8.3	16.7	25.0	19.2	27.5	2.5	4.2	2.4	3.9
	125	9.4	18.7	28.1	21.2	30.6	3.8	6.6	3.7	5.2
	160	12.7	25.3	38.0	27.8	40.5	6.3	10.8	6.1	7.6
3VA12	160	–	–	33.0	–	35.5	4.4	6.1	13.9	–
	200	–	–	42.0	–	44.5	6.9	9.6	17.0	–
	250	–	–	57.0	–	59.5	10.8	15.0	21.0	–
3VA13	320	–	–	80.1	–	82.6	19.0	30.2 [1]	–	–
	400	–	–	92.1	-	94.6	29.8	36.3 [1]	–	–
3VA14	500	–	–	122.7	–	125.2	46.5	49.6 [1]	–	–
	630	–	–	192.9	–	195.4	73.8	78.2 [1]	–	–

[1] The following values for additional power losses result based on the derating factor of 0.9 (< 500 A) or 0.8 (≥ 500 A) for plug-in and draw-out units

320 A: 24.5 W

400 A: 29.4 W

500 A: 31.7 W

630 A: 50.0 W

Note

The specified power loss applies to 3-pole and 4-pole devices in the case of 3-phase, symmetrical loading.

Power losses of 3VA1 molded case circuit breakers - starter protection circuit breakers

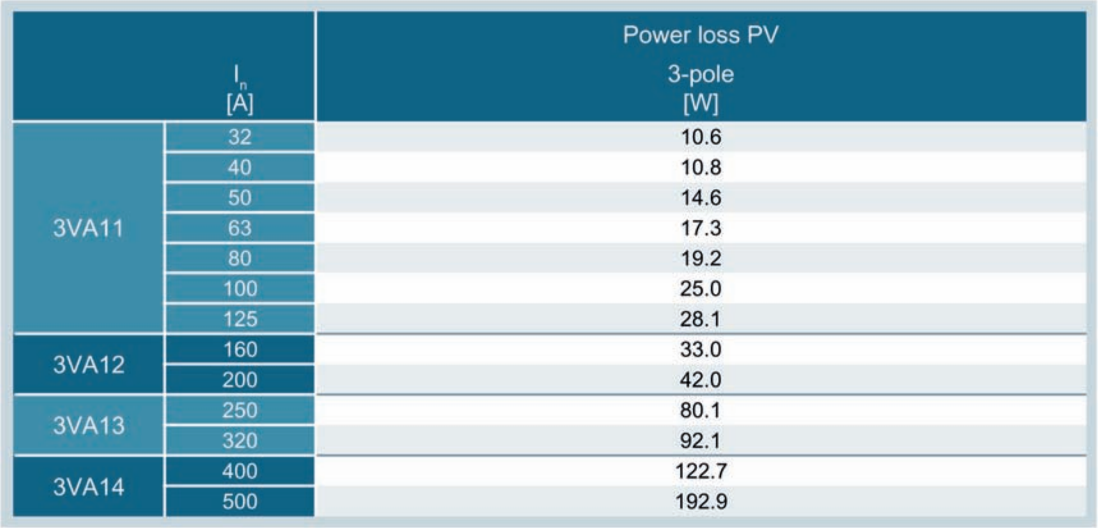

	I_n [A]	Power loss PV 3-pole [W]
3VA11	32	10.6
	40	10.8
	50	14.6
	63	17.3
	80	19.2
	100	25.0
	125	28.1
3VA12	160	33.0
	200	42.0
3VA13	250	80.1
	320	92.1
3VA14	400	122.7
	500	192.9

Power losses of 3VA1 molded case circuit breakers - switch disconnectors

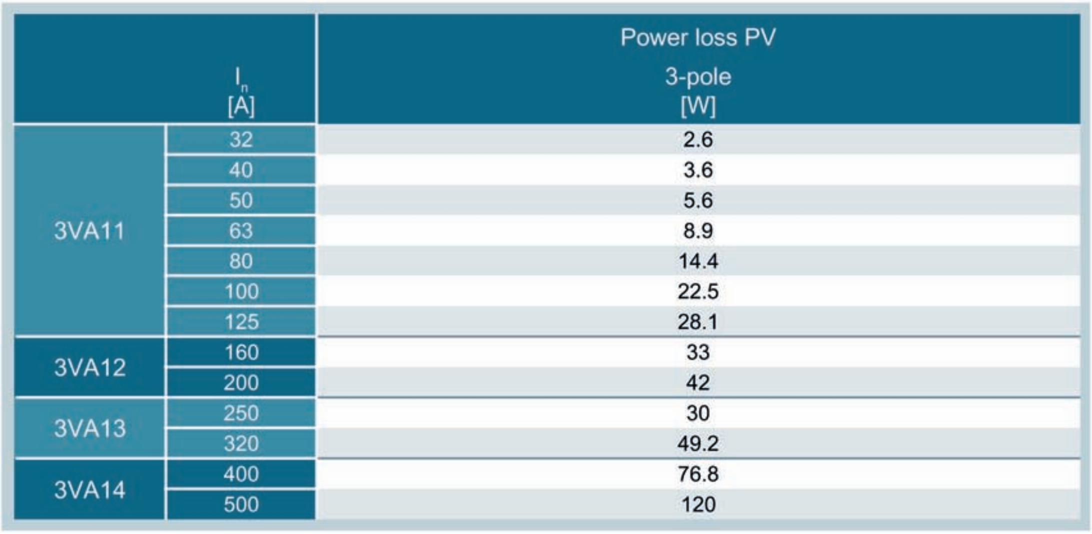

	I_n [A]	Power loss PV 3-pole [W]
3VA11	32	2.6
	40	3.6
	50	5.6
	63	8.9
	80	14.4
	100	22.5
	125	28.1
3VA12	160	33
	200	42
3VA13	250	30
	320	49.2
3VA14	400	76.8
	500	120

6.3.2 Power losses of 3VA2 molded case circuit breakers

		3VA2 Breaker Power loss PV		3VA2 Breaker with UVR Power loss PV		3VA2 Breaker external accessories Additional Power loss PV		
	I_n [A]	I_{cu}/I_{cs} M, H, C-class 3- / 4-pole [W]	I_{cu}/I_{cs} L-class 3- / 4-pole [W]	I_{cu}/I_{cs} M, H, C-class 3- / 4-pole [W]	I_{cu}/I_{cs} L-class 3- / 4-pole [W]	Rear terminals 3- / 4-pole [W]	Plug-In / Draw-Out unit 3- / 4-pole [W]	RCD (load side) 3- / 4-pole [W]
3VA20	25	0.84	0.50	3.34	3.00	0.1	0.1	0.2
	40	2.2	1.2	4.7	3.7	0.3	0.3	0.6
	63	5.4	3.0	7.9	5.5	0.7	0.8	1.5
	100	13.5	7.7	16.0	10.2	1.7	2.0	3.9
3VA21	25	0.6	0.5	3.1	3.0	0.1	0.1	0.2
	40	1.6	1.2	4.1	3.7	0.3	0.3	0.6
	63	4.0	3.1	6.5	5.6	0.7	0.8	1.5
	100	10.0	7.7	12.5	10.2	1.7	2.0	3.9
	160	25.5	19.7	28.0	22.2	4.4	5.0	10
3VA22	160	19.7	19.7	22.2	22.2	4.4	5.0	10
	250	48.0	48.0	50.5	50.5	10.8	12.3	24.3
3VA23	250	37.5	—	40.0	—	3.3	4.7	29.3
	400	96.0	—	98.5	—	8.5	12.0	75.0
3VA24	400	63.5	—	66.0	—	8.5	5.8	17.3
	500	99.0	—	101.5	—	13.2	9.0	27.0
	630	162.0	—	164.5	—	7.0	72.0	66.0

Note

The specified power loss applies to 3-pole and 4-pole devices in the case of 3-phase, symmetrical loading.

6.4 Derating and temperature compensation

6.4.1 Derating of 3VA1 molded case circuit breakers

The temperature inside the molded case circuit breaker is influenced by the ambient temperature and the current-dependent power loss generated inside the unit. To prevent overloading of 3VA1 molded case circuit breakers under difficult thermal conditions, the maximum rated continuous operational current must be limited as a function of the ambient temperature.

Note

The values were calculated for molded case circuit breakers without accessories. They do not apply to all installation situations of the molded case circuit breaker and may deviate depending upon factors such as cables and busbars, packing density, ventilation, etc.

Please observe the applicable overriding guidelines (e.g. IEC 61439).

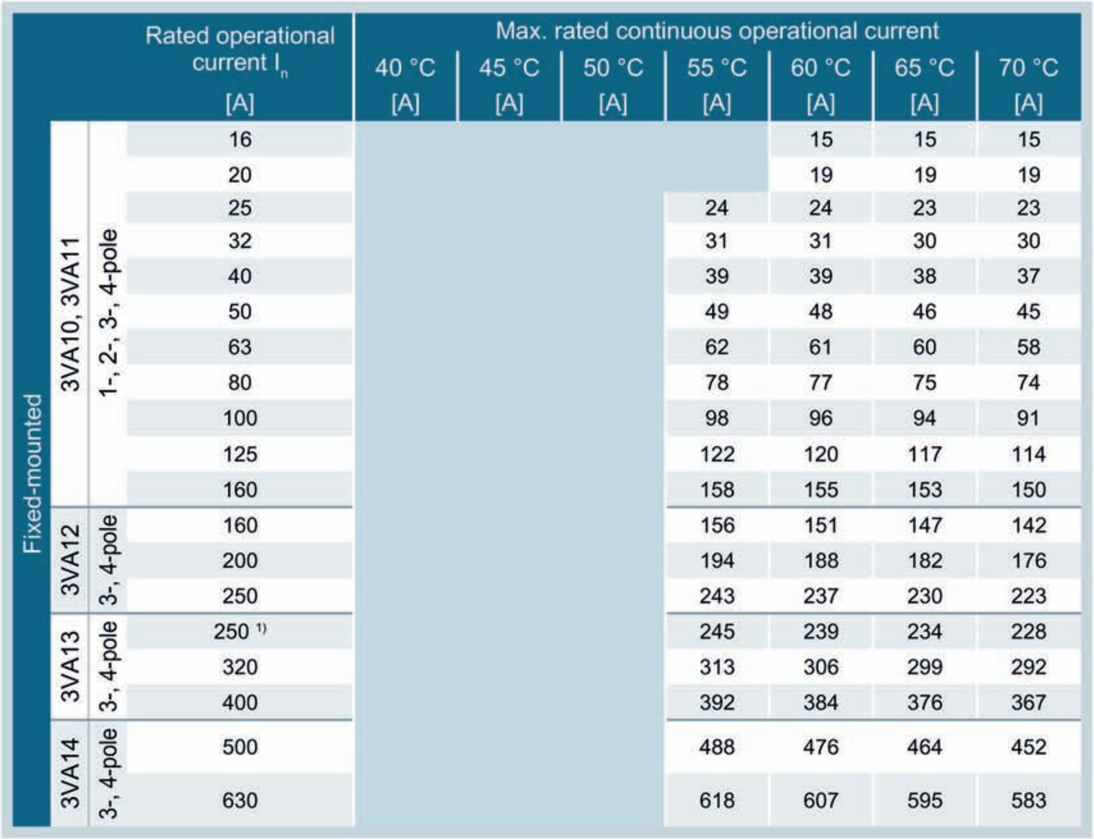

			Rated operational current I_n [A]	Max. rated continuous operational current						
				40 °C [A]	45 °C [A]	50 °C [A]	55 °C [A]	60 °C [A]	65 °C [A]	70 °C [A]
Fixed-mounted	3VA10, 3VA11	1-, 2-, 3-, 4-pole	16	▨	▨	▨	▨	15	15	15
			20	▨	▨	▨	▨	19	19	19
			25	▨	▨	▨	24	24	23	23
			32	▨	▨	▨	31	31	30	30
			40	▨	▨	▨	39	39	38	37
			50	▨	▨	▨	49	48	46	45
			63	▨	▨	▨	62	61	60	58
			80	▨	▨	▨	78	77	75	74
			100	▨	▨	▨	98	96	94	91
			125	▨	▨	▨	122	120	117	114
			160	▨	▨	▨	158	155	153	150
	3VA12	3-, 4-pole	160	▨	▨	▨	156	151	147	142
			200	▨	▨	▨	194	188	182	176
			250	▨	▨	▨	243	237	230	223
	3VA13	3-, 4-pole	250 1)	▨	▨	▨	245	239	234	228
			320	▨	▨	▨	313	306	299	292
			400	▨	▨	▨	392	384	376	367
	3VA14	3-, 4-pole	500	▨	▨	▨	488	476	464	452
			630	▨	▨	▨	618	607	595	583

1)	For TM120M only (starter protection circuit breaker)
▨	No derating up to the rated operational current I_n of the molded case circuit breaker

Derating in combination with accessories

None of the accessories from the extensive range available for 3VA1 molded case circuit breakers has an influence on the thermal response thresholds of the switching devices except for two accessories that require additional correction factors. These are:

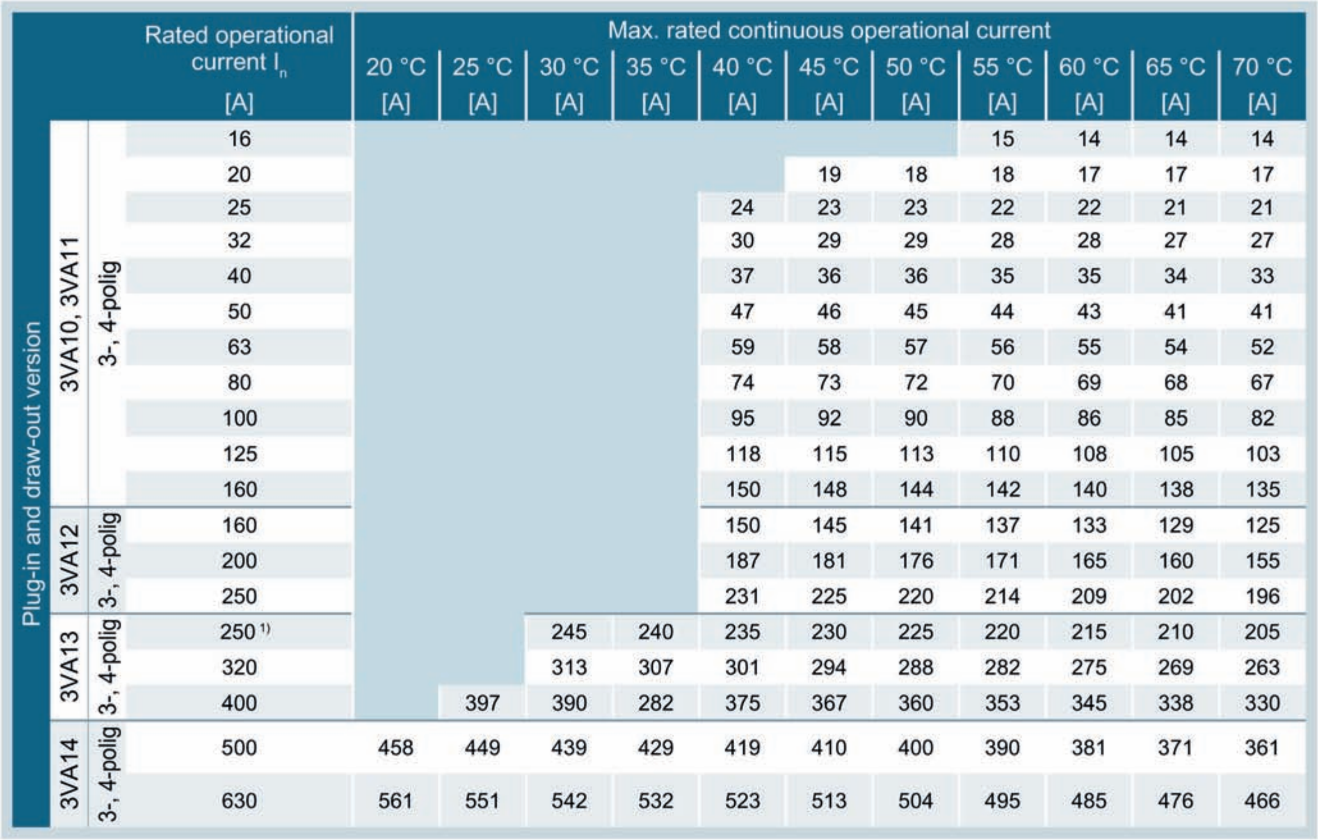

			Rated operational current I_n [A]	Max. rated continuous operational current										
				20 °C [A]	25 °C [A]	30 °C [A]	35 °C [A]	40 °C [A]	45 °C [A]	50 °C [A]	55 °C [A]	60 °C [A]	65 °C [A]	70 °C [A]
Plug-in and draw-out version	3VA10, 3VA11	3-, 4-polig	16	▨	▨	▨	▨	▨	▨	▨	15	14	14	14
			20	▨	▨	▨	▨	▨	19	18	18	17	17	17
			25	▨	▨	▨	▨	24	23	23	22	22	21	21
			32	▨	▨	▨	▨	30	29	29	28	28	27	27
			40	▨	▨	▨	▨	37	36	36	35	35	34	33
			50	▨	▨	▨	▨	47	46	45	44	43	41	41
			63	▨	▨	▨	▨	59	58	57	56	55	54	52
			80	▨	▨	▨	▨	74	73	72	70	69	68	67
			100	▨	▨	▨	▨	95	92	90	88	86	85	82
			125	▨	▨	▨	▨	118	115	113	110	108	105	103
			160	▨	▨	▨	▨	150	148	144	142	140	138	135
	3VA12	3-, 4-polig	160	▨	▨	▨	▨	150	145	141	137	133	129	125
			200	▨	▨	▨	▨	187	181	176	171	165	160	155
			250	▨	▨	▨	▨	231	225	220	214	209	202	196
	3VA13	3-, 4-polig	250 [1]	▨	▨	245	240	235	230	225	220	215	210	205
			320	▨	▨	313	307	301	294	288	282	275	269	263
			400	▨	397	390	282	375	367	360	353	345	338	330
	3VA14	3-, 4-polig	500	458	449	439	429	419	410	400	390	381	371	361
			630	561	551	542	532	523	513	504	495	485	476	466

1) For TM120M only (starter protection circuit breaker)

▨ No derating up to the rated operational current I_n of the molded case circuit breaker

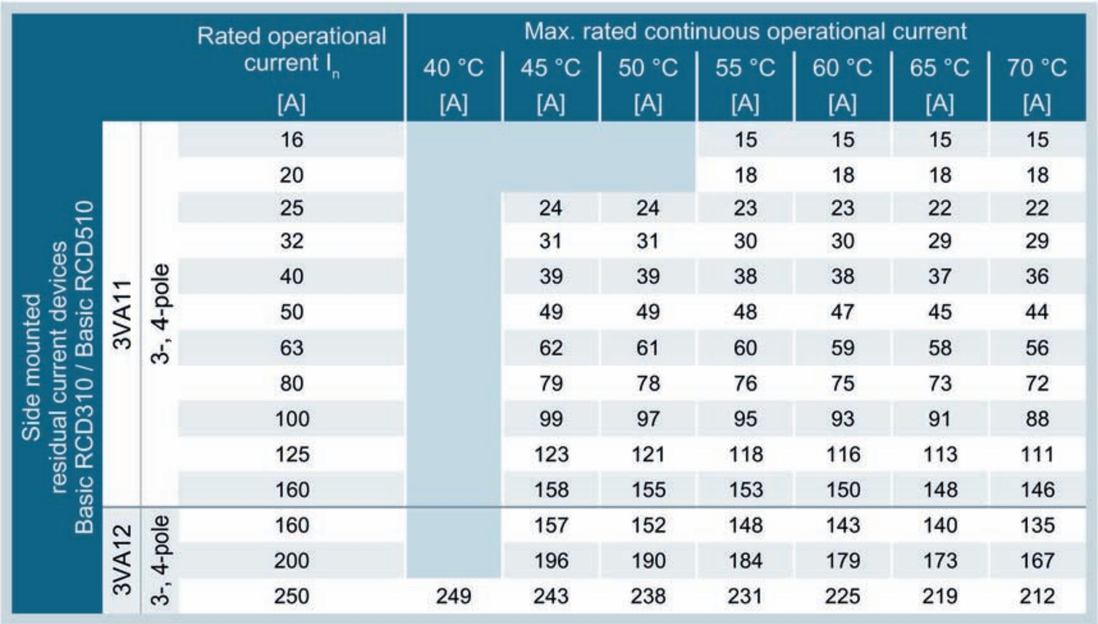

			Rated operational current I_n [A]	Max. rated continuous operational current						
				40 °C [A]	45 °C [A]	50 °C [A]	55 °C [A]	60 °C [A]	65 °C [A]	70 °C [A]
Side mounted residual current devices Basic RCD310 / Basic RCD510	3VA11	3-, 4-pole	16	▨	▨	▨	15	15	15	15
			20	▨	▨	▨	18	18	18	18
			25	▨	24	24	23	23	22	22
			32	▨	31	31	30	30	29	29
			40	▨	39	39	38	38	37	36
			50	▨	49	49	48	47	45	44
			63	▨	62	61	60	59	58	56
			80	▨	79	78	76	75	73	72
			100	▨	99	97	95	93	91	88
			125	▨	123	121	118	116	113	111
			160	▨	158	155	153	150	148	146
	3VA12	3-, 4-pole	160	▨	157	152	148	143	140	135
			200	▨	196	190	184	179	173	167
			250	249	243	238	231	225	219	212

▨ No derating up to the rated operational current I_n of the molded case circuit breaker

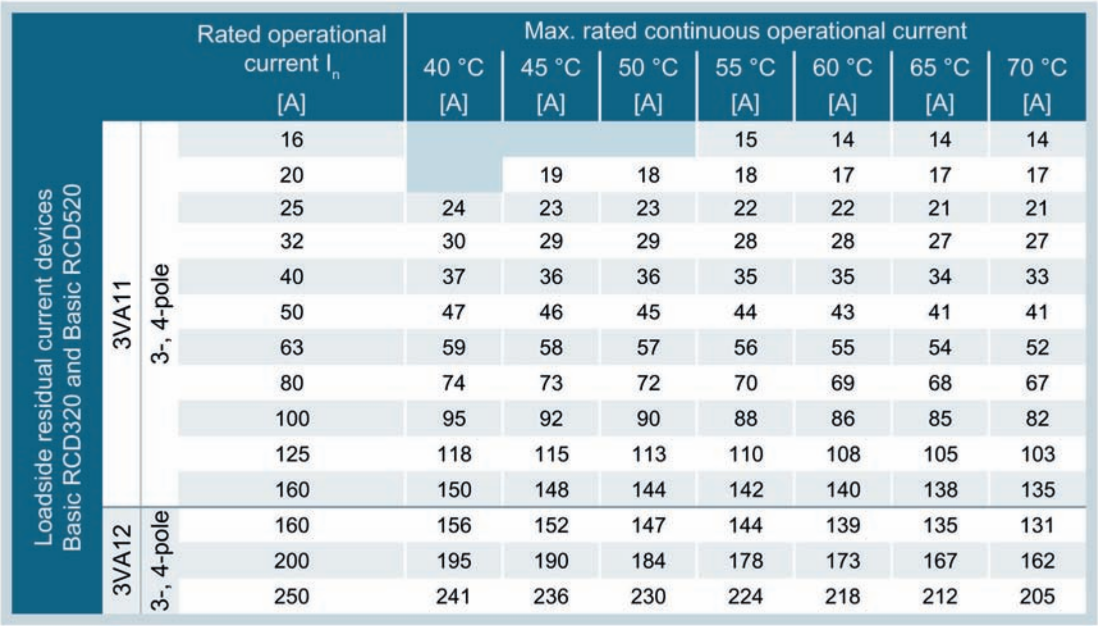

			Rated operational current I_n [A]	Max. rated continuous operational current						
				40 °C [A]	45 °C [A]	50 °C [A]	55 °C [A]	60 °C [A]	65 °C [A]	70 °C [A]
Loadside residual current devices Basic RCD320 and Basic RCD520	3VA11	3-, 4-pole	16	▨	▨	▨	15	14	14	14
			20	▨	19	18	18	17	17	17
			25	24	23	23	22	22	21	21
			32	30	29	29	28	28	27	27
			40	37	36	36	35	35	34	33
			50	47	46	45	44	43	41	41
			63	59	58	57	56	55	54	52
			80	74	73	72	70	69	68	67
			100	95	92	90	88	86	85	82
			125	118	115	113	110	108	105	103
			160	150	148	144	142	140	138	135
	3VA12	3-, 4-pole	160	156	152	147	144	139	135	131
			200	195	190	184	178	173	167	162
			250	241	236	230	224	218	212	205

▨ No derating up to the rated operational current I_n of the molded case circuit breaker

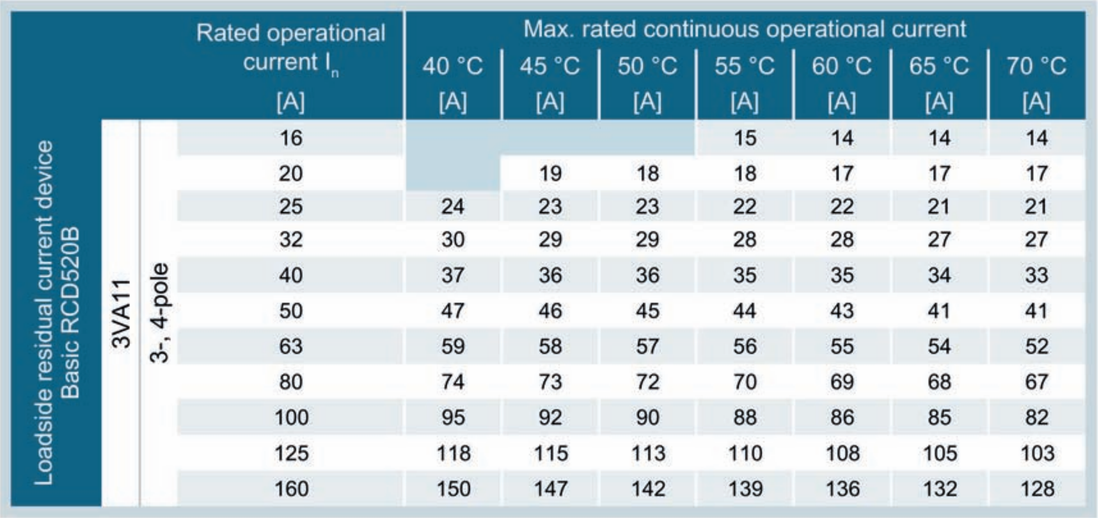

			Rated operational current I_n [A]	Max. rated continuous operational current						
				40 °C [A]	45 °C [A]	50 °C [A]	55 °C [A]	60 °C [A]	65 °C [A]	70 °C [A]
Loadside residual current device Basic RCD520B	3VA11	3-, 4-pole	16	▨	▨	▨	15	14	14	14
			20	▨	19	18	18	17	17	17
			25	24	23	23	22	22	21	21
			32	30	29	29	28	28	27	27
			40	37	36	36	35	35	34	33
			50	47	46	45	44	43	41	41
			63	59	58	57	56	55	54	52
			80	74	73	72	70	69	68	67
			100	95	92	90	88	86	85	82
			125	118	115	113	110	108	105	103
			160	150	147	142	139	136	132	128

▨ No derating up to the rated operational current I_n of the molded case circuit breaker

6.4.2 Temperature compensation for thermal-magnetic trip units TM210, TM220 and TM240

The trip units for 3VA1 molded case circuit breakers are factory-calibrated to a temperature of 50 °C. The thermal response threshold of the trip unit changes when the circuit breaker is operated in a higher or lower ambient temperature. To obtain the characteristic tripping times at a specific ambient temperature, it is necessary to apply correction factors when setting the thermal trip units.

Correction factor TK is applied to compensate for the ambient temperature.

The first step in calculating the correction factor TK is to determine the setting factor at 50 °C:

$$EF(50\ °C) = \frac{I}{I_n}$$

EF(50 °C) Setting factor at 50 °C

I System current

I_n Rated operational current of the molded case circuit breaker

Using the setting factor calculated at 50 °C, it is possible to read the correction factor K off the following charts:

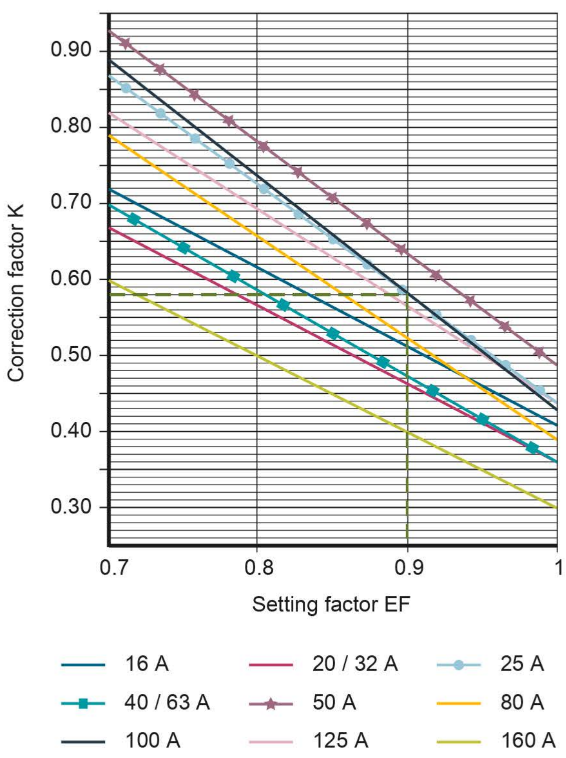
3VA10 / 3VA11

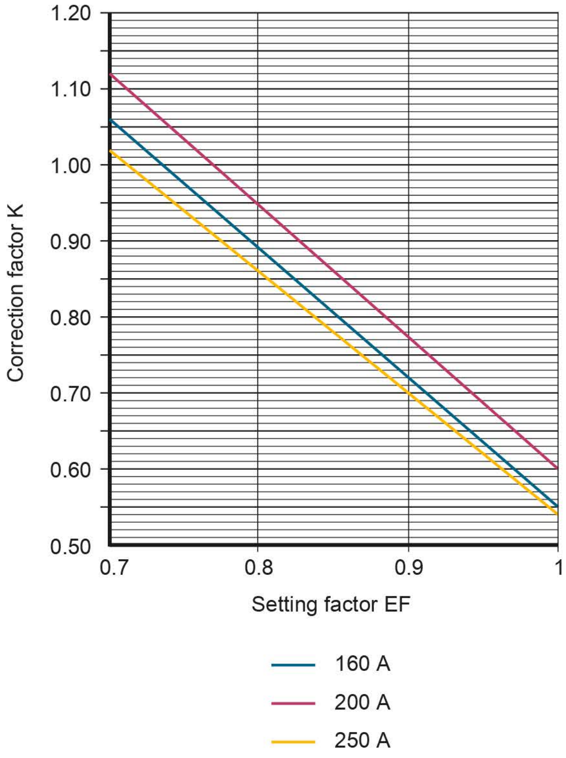
3VA12

– – – No derating up to the rated operational current I_n of the molded case circuit breaker

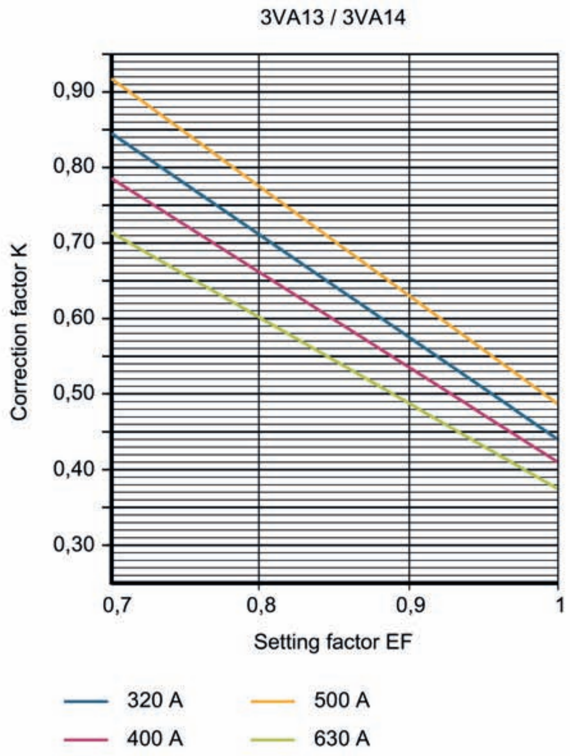

Using the two calculated values, it is possible to determine the temperature compensation TK and finally the setting value for the trip unit $I_{r(TU)}$:

$$TK(T_U) = \left(\frac{K \cdot (T_U - 50\ °C)}{100} + 1\right)$$

$TK(T_U)$	Temperature compensation for molded case circuit breaker with service temperature T_U
K	Correction factor
T_u	Service temperature of molded case circuit breaker

Trip unit setting value:

$I_{r(TU)} = I_n \cdot EF(50\ °C) \cdot TK$

$I_{r(TU)}$	Trip unit setting value with service temperature T_u

The operational current must never exceed the maximum rated operational current I_n of the molded case circuit breaker. If the current calculated for the operating conditions is higher than the rated operational current of the unit, a molded case circuit breaker with the appropriate rated operational current must be deployed.

Example 1: Correction of setting values as a function of ambient temperature

Starting point:

On a 3VA1 100 A molded case circuit breaker with a TM240 100 A trip unit, the real tripping threshold for various different service temperatures must be set to a required system current of I = 90 A.

- **Ambient temperature 60 °C:**

  Setting factor EF(50 °C) = (90 / 100) = 0.9

  Correction factor K = 0.58 (see chart above)

  Temperature compensation TK(60 °C) = (0.58 · (60 °C to 50 °C) / 100) + 1 = 1.058

  Setting value $I_{r(60\ °C)}$ = 100 A · 0.9 · 1.058 = **95 A**

- **Ambient temperature 40 °C:**

  Setting factor EF(50 °C) = (90 / 100) = 0.9

  Correction factor K = 0.58

  Temperature compensation TK(40 °C) = (0.58 · (40 °C ... 50 °C) / 100) + 1 = 0.942

  Setting value $I_{r(40\ °C)}$ = 100 A · 0.9 · 0.942 = **85 A**

If the setting value calculated for the thermal trip unit $I_{r(TU)}$ is outside the possible setting range, an appropriate molded case circuit breaker with a higher or lower rated operational current must be selected and the compensation calculation then performed again.

Note

These values do not apply to all installation situations of the molded case circuit breaker and may deviate depending upon factors such as cables and busbars, packing density, ventilation, etc.

Please observe the applicable overriding guidelines (e.g. IEC 61439).

Example 2: Calculation of the tripping time

Starting point:

Based on the example above, the tripping time for an overcurrent I_O = 360 A will now be calculated.
To compensate for the ambient temperature of 60 °C, rather than 50 °C, the thermal trip unit has been set $I_{r(60\ °C)}$ = 95 A for a system current I = 90 A.

The first step is to calculate the ratio between the overcurrent and the system current:

I_o/I = 360 A / 90 A = 4

Using this value, it is now possible to read the tripping time from the characteristics chart:

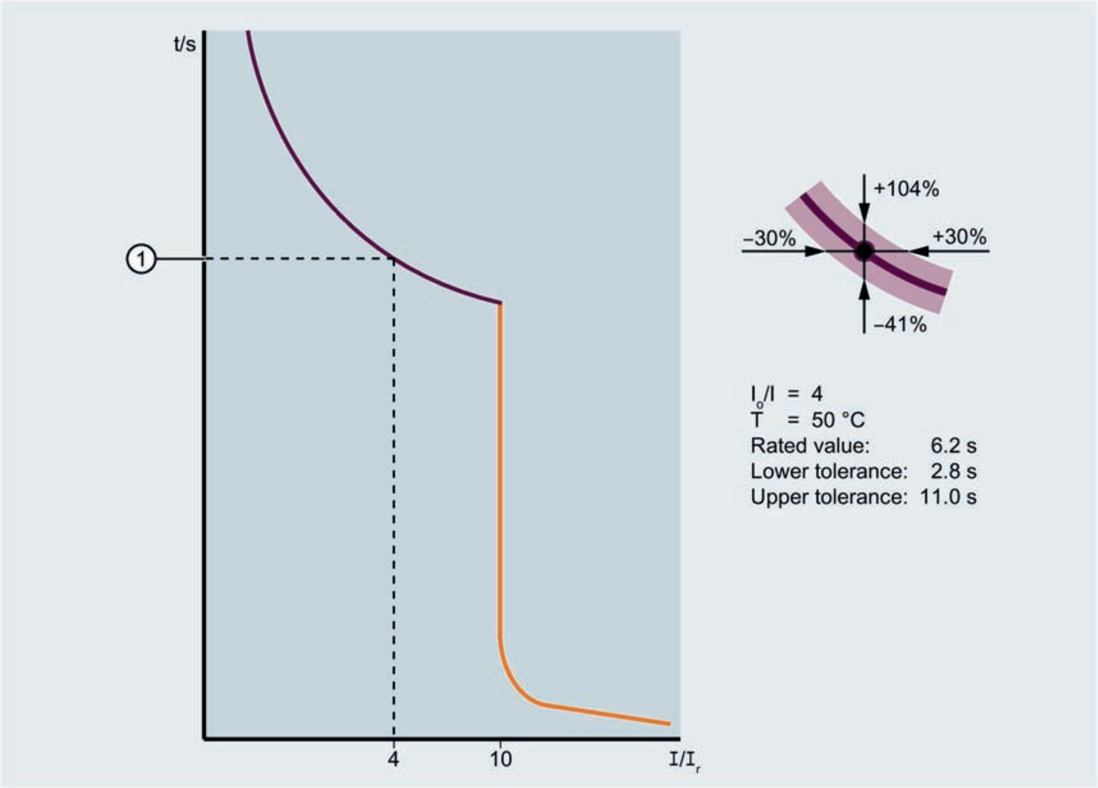

① Tripping time (schematic representation)

Inclusion of accessories

None of the accessories from the extensive range available for 3VA1 molded case circuit breakers has an influence on the thermal response thresholds of the switching devices except for two accessories that require additional correction factors. These are:

- Plug-in version / draw-out version
- Residual current devices

None of the other accessories has an influence on the thermal response thresholds of trip units.

The table below shows the correction factors of setting value I_r for the trip units of 3VA1 molded case circuit breakers in plug-in / draw-out technology and for 3VA1 molded case circuit breakers combined with residual current devices:

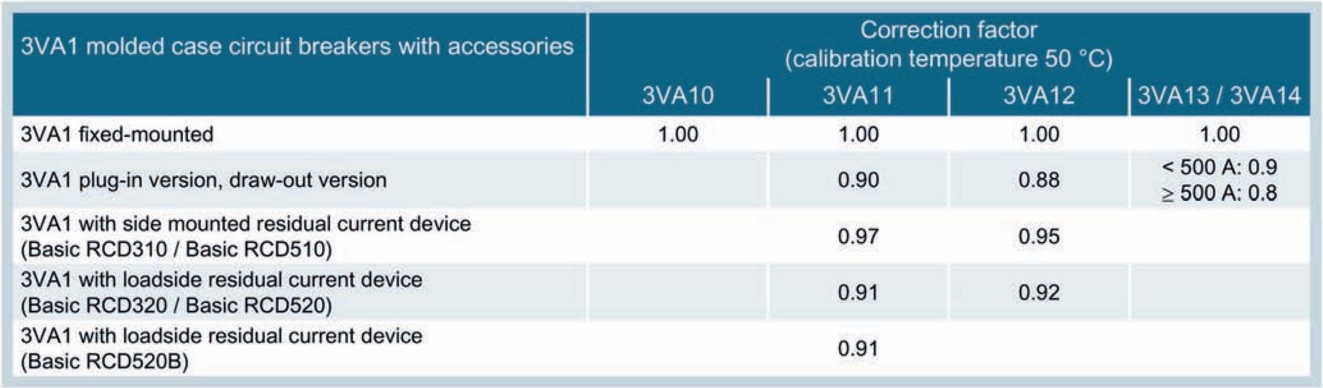

3VA1 molded case circuit breakers with accessories	Correction factor (calibration temperature 50 °C)			
	3VA10	3VA11	3VA12	3VA13 / 3VA14
3VA1 fixed-mounted	1.00	1.00	1.00	1.00
3VA1 plug-in version, draw-out version		0.90	0.88	< 500 A: 0.9 ≥ 500 A: 0.8
3VA1 with side mounted residual current device (Basic RCD310 / Basic RCD510)		0.97	0.95	
3VA1 with loadside residual current device (Basic RCD320 / Basic RCD520)		0.91	0.92	
3VA1 with loadside residual current device (Basic RCD520B)		0.91		

Example

Starting point:

The current loading of a 3VA1 molded case circuit breaker is calculated to be 90 A and the ambient temperature 65 °C for a given application. The plug-in version of the molded case circuit breaker will be used.

The appropriate size of molded case circuit breaker is determined first on the basis of the correction factor for 3VA1 plug-in technology (see table above):
Design of assembly at 50 °C: I_r = (90 A / 0.9) = 100 A

It is therefore necessary to select a molded case circuit breaker that allows a setting value of 100 A on the thermal overload release at a calibration temperature of 50 °C. A 3VA1 molded case circuit breaker 160 A with I_n = 125 A is therefore used for the application.

The temperature compensation is then calculated according to the method described above:

- **Ambient temperature 65 °C:**

  Setting factor EF(50 °C) = (100 / 125) = 0.8

  Correction factor K = 0.69 (from chart)

  Switching device temperature compensation TK(65 °C) = (0.69 · (65 °C ... 50 °C) / 100) + 1 = 1.1

  Setting value $I_{r(65\,°C)}$ = 125 A · 0.9 · 1.1 = **124 A**

Note

These values do not apply to all installation situations of the molded case circuit breaker and may deviate depending upon factors such as cables and busbars, packing density, ventilation, etc.

Please observe the applicable overriding guidelines (e.g. IEC 61439).

6.4.3 Additional correction factors with frequencies other than 50/60 Hz for 3VA1 molded case circuit breakers

The temperature rise in the bimetal is greater at frequencies above 50/60 Hz. This is due to eddy-current losses and the reduction in the available conductor cross section as a result of the skin effect.

The rated operational current must therefore be reduced from the value used in 50/60 Hz applications.

3VA10 / 3VA11 Frequencies	Correction factor for the thermal trip unit
< 150 Hz	1.0
150 Hz … 400 Hz	0.9

3VA12 Frequencies	Correction factor for the thermal trip unit
< 100 Hz	1.0
100 Hz … 250 Hz	0.95
250 Hz … 400 Hz	0.90

3VA13 / 3VA14 Frequencies	Correction factor for the thermal trip unit
≤ 100 Hz	1.0
100 Hz … 150 Hz	0.95
200 Hz	0.90
300 Hz … 400 Hz	0.85

In an application with 400 Hz, this means the following for the example from chapter Derating of 3VA1 molded case circuit breakers (Page 628) with a 3VA1 molded case circuit breaker when current I_r = 90 A is required:

- Setting value $I_{r(400\ \mathrm{Hz})} = 90\ \mathrm{A} \cdot 0.9 = 81\ \mathrm{A}$

Where ambient temperatures differ from the calibration temperature, temperature compensation as described in chapter Derating of 3VA1 molded case circuit breakers (Page 628) must be performed.

In addition, a correction factor for setting the magnetic trip unit as a function of frequency must be applied.

	DC	Correction factor for the magnetic trip unit at frequency f [Hz]									
		20	50	60	100	150	200	250	300	350	400
3VA10 3VA11	0.7	1.05	1	1	1	0.95	0.9	0.85	0.80	0.75	0.70
3VA12	0.85	1	1	1	0.8	0.75	0.7	0.65	0.6	0.57	0.55
3VA13 3VA14	0.8	1	1	0.95	0.91	0.83	0.8	0.75	0.7	0.65	0.6

Example

Starting point:

A 3VA1 molded case circuit breaker 100 A with a TM240 trip unit is used for a 400 Hz application. The molded case circuit breaker is required to trip instantaneously in response to an overcurrent of 900 A.

The maximum permissible rated continuous operational current is calculated first:

100 A · 0.9 = **90 A**

The setting value for instantaneous short-circuit protection (I_i) is then determined on the basis of the correction factor from the table above:

I_i = 900 A · 0.7 = **630 A**

6.4.4 Correction factors with direct current for the thermal-magnetic trip units of 3VA1 molded case circuit breakers

With DC systems, a correction factor must be applied to the magnetic trip unit.

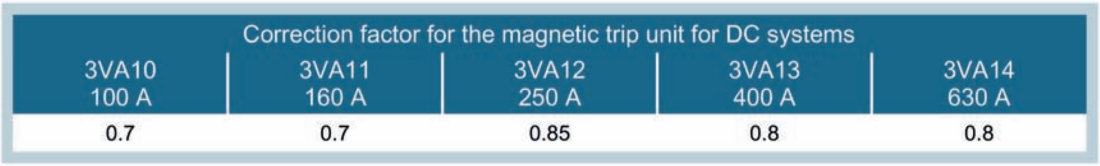

Correction factor for the magnetic trip unit for DC systems				
3VA10 100 A	3VA11 160 A	3VA12 250 A	3VA13 400 A	3VA14 630 A
0.7	0.7	0.85	0.8	0.8

Where ambient temperatures differ from the calibration temperature, temperature compensation as described in chapter Derating of 3VA1 molded case circuit breakers (Page 628) must be performed.

Example:

Starting point:

A 3VA1 molded case circuit breaker 160 A with a TM240 trip unit is used in a DC system. The molded case circuit breaker is required to trip instantaneously in response to an overcurrent of 1200 A.

The setting value for the instantaneous short-circuit protection (I_i) is:

I_i = 1200 A · 0.7 = **840 A**

6.4.5 Derating for the 3VA1 switch disconnector

The 3VA1 SD switch disconnectors do not have a trip unit. The temperature inside the switch disconnector is however influenced by the ambient temperature and the current-dependent power loss generated inside the unit. Nonetheless, 3VA1 switch disconnectors up to 125 A do not require derating up to 70 °C.

To prevent overloading of switch disconnectors over 125 A under difficult thermal conditions, the maximum rated continuous operational current must be limited as a function of the ambient temperature:

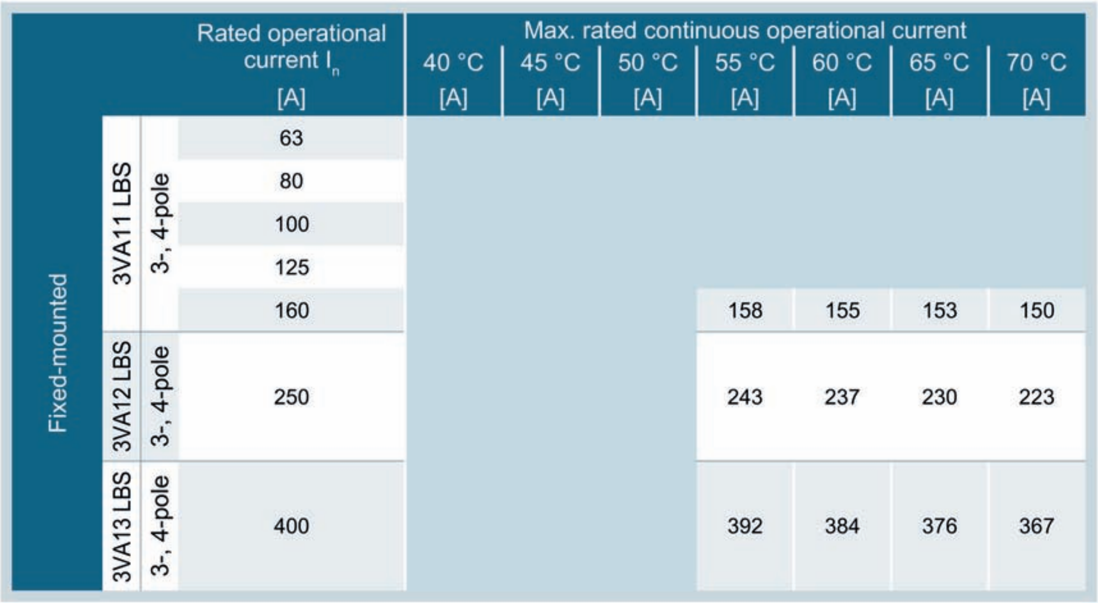

			Rated operational current I_n [A]	Max. rated continuous operational current						
				40 °C [A]	45 °C [A]	50 °C [A]	55 °C [A]	60 °C [A]	65 °C [A]	70 °C [A]
Fixed-mounted	3VA11 LBS	3-, 4-pole	63	▨	▨	▨	▨	▨	▨	▨
			80	▨	▨	▨	▨	▨	▨	▨
			100	▨	▨	▨	▨	▨	▨	▨
			125	▨	▨	▨	▨	▨	▨	▨
			160	▨	▨	▨	158	155	153	150
	3VA12 LBS	3-, 4-pole	250	▨	▨	▨	243	237	230	223
	3VA13 LBS	3-, 4-pole	400	▨	▨	▨	392	384	376	367

▨ No derating up to the rated operational current Iₙ of the switch disconnector

Limitation of the rated continuous operational current in combination with accessories

The table below shows the maximum rated continuous operational current for the plug-in version of switch disconnectors in sizes 160 A, 250 A and 400 A and for switch disconnectors combined with residual current devices:

			Rated operational current I_n [A]	Max. rated continuous operational current										
				20 °C [A]	25 °C [A]	30 °C [A]	35 °C [A]	40 °C [A]	45 °C [A]	50 °C [A]	55 °C [A]	60 °C [A]	65 °C [A]	70 °C [A]
Plug-in and draw-out version	3VA11 LBS	3-, 4-pole	63											
			80											
			100											
			125											
			160					150	148	144	142	140	138	135
	3VA12 LBS	3-, 4-pole	250					231	225	220	214	209	202	196
	3VA13 LBS	3-, 4-pole	400		397	390	382	375	367	360	353	345	338	330

🟦 No derating up to the rated operational current I_n of the molded case circuit breaker

			Rated operational current I_n [A]	Max. rated continuous operational current						
				40 °C [A]	45 °C [A]	50 °C [A]	55 °C [A]	60 °C [A]	65 °C [A]	70 °C [A]
Side mounted residual current devices Basic RCD310 / Basic RCD510	3VA11 LBS	3-, 4-pole	63							
			80							
			100							
			125							
			160		158	155	153	150	148	146
	3VA12 LBS	3-, 4-pole	250		243	238	231	225	219	212

🟦 No derating up to the rated operational current I_n of the molded case circuit breaker

None of the other available accessories require derating of the 3VA1 switch disconnector.

6.4.6 Derating for the electronic trip units of 3VA2 molded case circuit breakers

The current measuring circuits of the electronic trip units of 3VA2 molded case circuit breakers are not affected by the ambient temperature. The Rogowski coils integrated in the trip unit measure the current and compare it to the set tripping threshold. Higher or lower ambient temperatures do not influence the tripping threshold, which means that it is not necessary to apply correction factors.

Limitation of the rated operational current

The temperature inside the molded case circuit breaker is nonetheless influenced by the ambient temperature and the current-dependent power loss generated inside the unit. To prevent overloading of molded case circuit breakers under difficult thermal conditions, the maximum rated continuous operational current must therefore be limited as a function of the ambient temperature in some cases:

The tables below specify the maximum rated uninterrupted operational current as a function of the accessories to be taken into account and the ambient temperature. The operational current must never exceed the maximum rated operational current of the molded case circuit breaker.

Note

These values do not apply to all installation situations of the molded case circuit breaker and may deviate depending upon factors such as cables and busbars, packing density, ventilation, etc.

Please observe the applicable overriding guidelines (e.g. IEC 61439).

3VA2 molded case circuit breakers, fixed-mounted versions

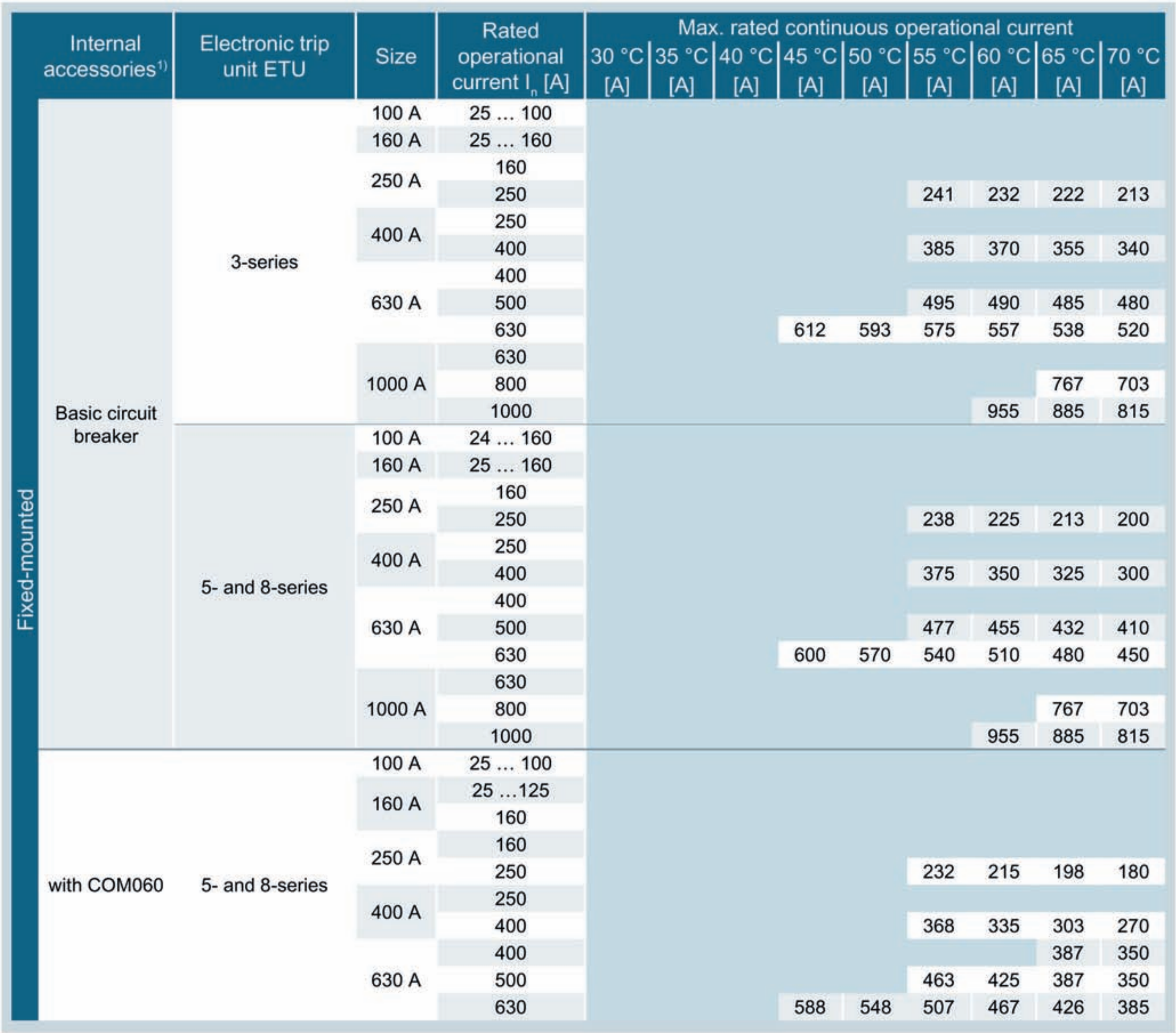

	Internal accessories[1]	Electronic trip unit ETU	Size	Rated operational current I_n [A]	Max. rated continuous operational current								
					30 °C [A]	35 °C [A]	40 °C [A]	45 °C [A]	50 °C [A]	55 °C [A]	60 °C [A]	65 °C [A]	70 °C [A]
Fixed-mounted	Basic circuit breaker	3-series	100 A	25 … 100	▨	▨	▨	▨	▨	▨	▨	▨	▨
			160 A	25 … 160	▨	▨	▨	▨	▨	▨	▨	▨	▨
			250 A	160	▨	▨	▨	▨	▨	▨	▨	▨	▨
				250	▨	▨	▨	▨	▨	241	232	222	213
			400 A	250	▨	▨	▨	▨	▨	▨	▨	▨	▨
				400	▨	▨	▨	▨	▨	385	370	355	340
			630 A	400	▨	▨	▨	▨	▨	▨	▨	▨	▨
				500	▨	▨	▨	▨	▨	495	490	485	480
				630	▨	▨	▨	612	593	575	557	538	520
			1000 A	630	▨	▨	▨	▨	▨	▨	▨	▨	▨
				800	▨	▨	▨	▨	▨	▨	▨	767	703
				1000	▨	▨	▨	▨	▨	▨	955	885	815
		5- and 8-series	100 A	24 … 160	▨	▨	▨	▨	▨	▨	▨	▨	▨
			160 A	25 … 160	▨	▨	▨	▨	▨	▨	▨	▨	▨
			250 A	160	▨	▨	▨	▨	▨	▨	▨	▨	▨
				250	▨	▨	▨	▨	▨	238	225	213	200
			400 A	250	▨	▨	▨	▨	▨	▨	▨	▨	▨
				400	▨	▨	▨	▨	▨	375	350	325	300
			630 A	400	▨	▨	▨	▨	▨	▨	▨	▨	▨
				500	▨	▨	▨	▨	▨	477	455	432	410
				630	▨	▨	▨	600	570	540	510	480	450
			1000 A	630	▨	▨	▨	▨	▨	▨	▨	▨	▨
				800	▨	▨	▨	▨	▨	▨	▨	767	703
				1000	▨	▨	▨	▨	▨	▨	955	885	815
	with COM060	5- and 8-series	100 A	25 … 100	▨	▨	▨	▨	▨	▨	▨	▨	▨
			160 A	25 …125	▨	▨	▨	▨	▨	▨	▨	▨	▨
				160	▨	▨	▨	▨	▨	▨	▨	▨	▨
			250 A	160	▨	▨	▨	▨	▨	▨	▨	▨	▨
				250	▨	▨	▨	▨	▨	232	215	198	180
			400 A	250	▨	▨	▨	▨	▨	▨	▨	▨	▨
				400	▨	▨	▨	▨	▨	368	335	303	270
			630 A	400	▨	▨	▨	▨	▨	▨	▨	387	350
				500	▨	▨	▨	▨	▨	463	425	387	350
				630	▨	▨	▨	588	548	507	467	426	385

1)	Only the COM060 communication module has an effect on derating. Other internal accessories can be used without restriction.
COM060	COM060 communication module
▨	No derating up to the rated operational current I_n of the molded case circuit breaker

3VA2 molded case circuit breakers, plug-in and draw-out versions

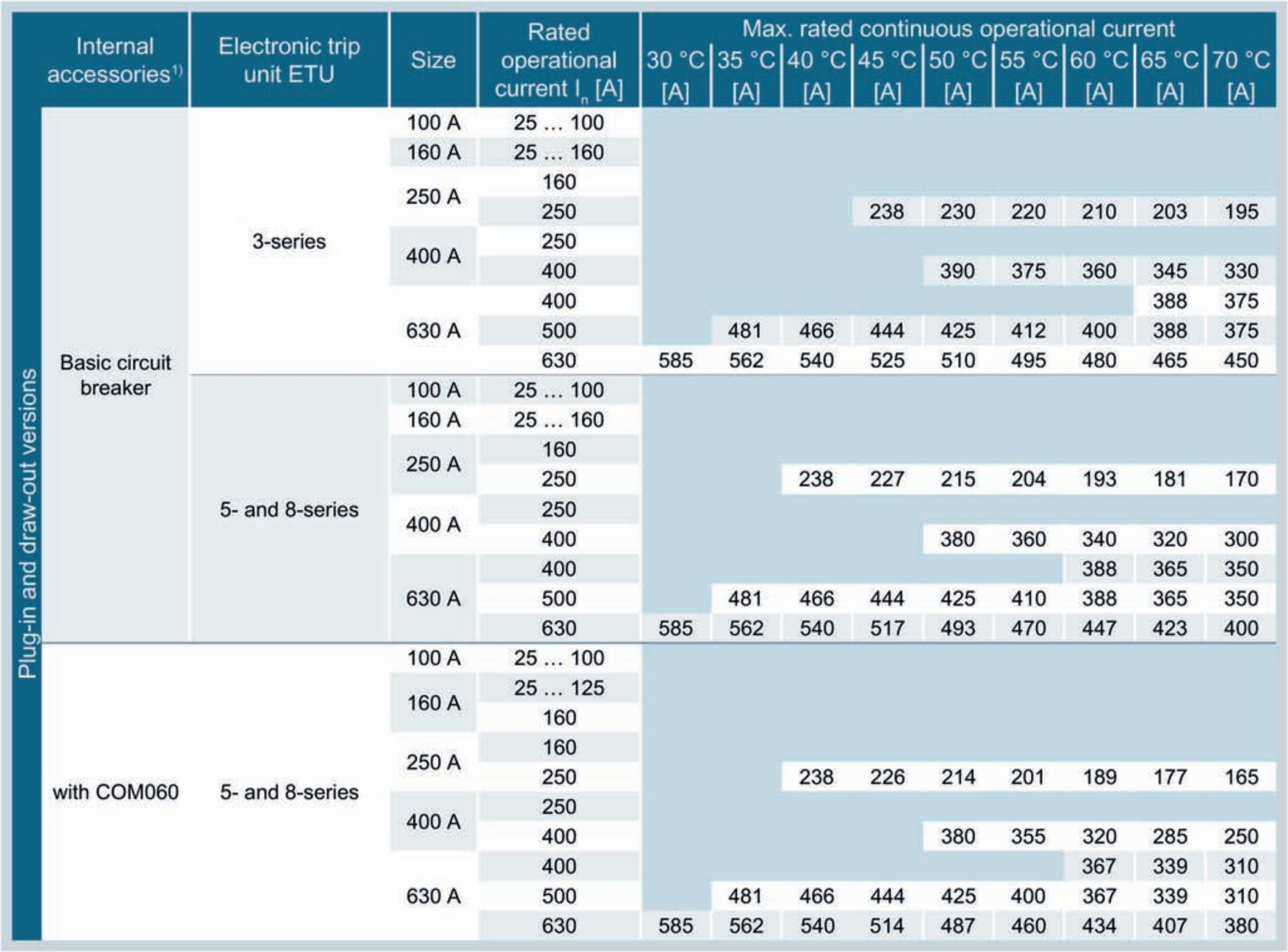

	Internal accessories[1]	Electronic trip unit ETU	Size	Rated operational current I_n [A]	Max. rated continuous operational current								
					30 °C [A]	35 °C [A]	40 °C [A]	45 °C [A]	50 °C [A]	55 °C [A]	60 °C [A]	65 °C [A]	70 °C [A]
Plug-in and draw-out versions	Basic circuit breaker	3-series	100 A	25 … 100									
			160 A	25 … 160									
			250 A	160									
				250				238	230	220	210	203	195
			400 A	250									
				400					390	375	360	345	330
			630 A	400								388	375
				500		481	466	444	425	412	400	388	375
				630	585	562	540	525	510	495	480	465	450
		5- and 8-series	100 A	25 … 100									
			160 A	25 … 160									
			250 A	160									
				250			238	227	215	204	193	181	170
			400 A	250									
				400					380	360	340	320	300
			630 A	400							388	365	350
				500		481	466	444	425	410	388	365	350
				630	585	562	540	517	493	470	447	423	400
	with COM060	5- and 8-series	100 A	25 … 100									
			160 A	25 … 125									
				160									
			250 A	160									
				250			238	226	214	201	189	177	165
			400 A	250									
				400					380	355	320	285	250
			630 A	400							367	339	310
				500		481	466	444	425	400	367	339	310
				630	585	562	540	514	487	460	434	407	380

[1] Only the COM060 communication module has an effect on derating. Other internal accessories can be used without restriction.

COM060 COM060 communication module

🟦 No derating up to the rated operational current I_n of the molded case circuit breaker

3VA2 molded case circuit breakers with RCD820 residual current device

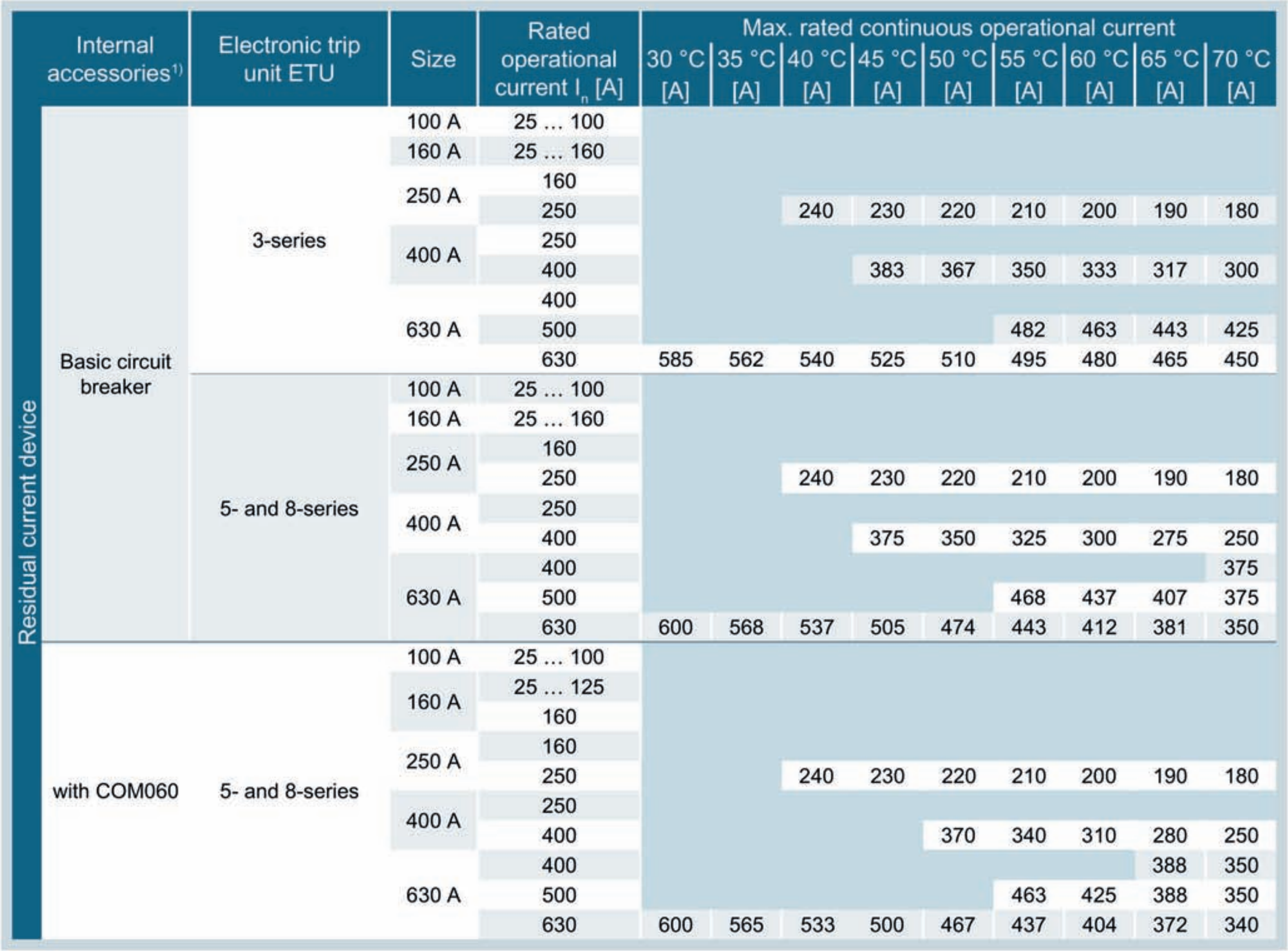

	Internal accessories[1]	Electronic trip unit ETU	Size	Rated operational current I_n [A]	Max. rated continuous operational current								
					30 °C [A]	35 °C [A]	40 °C [A]	45 °C [A]	50 °C [A]	55 °C [A]	60 °C [A]	65 °C [A]	70 °C [A]
Residual current device	Basic circuit breaker	3-series	100 A	25 … 100	▨	▨	▨	▨	▨	▨	▨	▨	▨
			160 A	25 … 160	▨	▨	▨	▨	▨	▨	▨	▨	▨
			250 A	160	▨	▨	▨	▨	▨	▨	▨	▨	▨
				250	▨	▨	240	230	220	210	200	190	180
			400 A	250	▨	▨	▨	▨	▨	▨	▨	▨	▨
				400	▨	▨	▨	383	367	350	333	317	300
			630 A	400	▨	▨	▨	▨	▨	▨	▨	▨	▨
				500	▨	▨	▨	▨	▨	482	463	443	425
				630	585	562	540	525	510	495	480	465	450
		5- and 8-series	100 A	25 … 100	▨	▨	▨	▨	▨	▨	▨	▨	▨
			160 A	25 … 160	▨	▨	▨	▨	▨	▨	▨	▨	▨
			250 A	160	▨	▨	▨	▨	▨	▨	▨	▨	▨
				250	▨	▨	240	230	220	210	200	190	180
			400 A	250	▨	▨	▨	▨	▨	▨	▨	▨	▨
				400	▨	▨	▨	375	350	325	300	275	250
			630 A	400	▨	▨	▨	▨	▨	▨	▨	▨	375
				500	▨	▨	▨	▨	▨	468	437	407	375
				630	600	568	537	505	474	443	412	381	350
	with COM060	5- and 8-series	100 A	25 … 100	▨	▨	▨	▨	▨	▨	▨	▨	▨
			160 A	25 … 125	▨	▨	▨	▨	▨	▨	▨	▨	▨
				160	▨	▨	▨	▨	▨	▨	▨	▨	▨
			250 A	160	▨	▨	▨	▨	▨	▨	▨	▨	▨
				250	▨	▨	240	230	220	210	200	190	180
			400 A	250	▨	▨	▨	▨	▨	▨	▨	▨	▨
				400	▨	▨	▨	▨	370	340	310	280	250
			630 A	400	▨	▨	▨	▨	▨	▨	▨	388	350
				500	▨	▨	▨	▨	▨	463	425	388	350
				630	600	565	533	500	467	437	404	372	340

[1] Only the COM060 communication module has an effect on derating. Other internal accessories can be used without restriction.

COM060 COM060 communication module

▨ No derating up to the rated operational current I_n of the molded case circuit breaker

Examples

Example 1

Starting point:
A plug-in version of a 3VA2 molded case circuit breaker 160 A with an ETU350 LSI trip unit is to be operated at 70 °C:

$I_{r(max\ 70°\ C)}$ = 160 A

No derating is required.

Example 2

Starting point:

A plug-in version of a 3VA2 molded case circuit breaker 250 A with an ETU850 LSI trip unit is to be operated at 60 °C with the COM060 communication module:

$I_{r(max\ 60\ °C)}$ = 189 A

6.4.7 Use of terminals with auxiliary conductor connection

When connecting terminals with control wire tap are used, the total current from the main circuit and control wire must not exceed the maximum rated operational current of the 3VA1 and 3VA2 molded case circuit breakers.

Appendix A

A.1 Standards and approvals

Description

Table A- 1 3VA1 and 3VA2 molded case circuit breakers conform to the following international standards

Standard		Title
CISPR11	Class A	Limits and methods of measurement of radio interference suppression of equipment in industrial environments.
	Class B	Limits and methods of measurement of radio interference suppression of equipment in domestic environments.
IEC 60664-1		Insulation coordination for equipment within low-voltage systems.
IEC 60068-2-1 "Ab"		Environmental testing - Part 2-1: Tests - Test A: Cold
IEC 60068-2-2 "Bd"		Environmental testing - Part 2-2: Tests - Test B: Dry heat
IEC 60068-2-27 "Ea"		Environmental testing - Part 2-27: Tests - Test Ea and guidance Shock
IEC 60068-2-30 "Db"		Environmental testing - Part 2-30: Tests - Test Db: Damp heat, cyclic (12 + 12 hours)
IEC 60068-2-52		Environmental testing - Part 2: Tests - Test Kb: Salt mist, cyclic (sodium chloride solution)
IEC 60068-2-6 "Fc"		Environmental testing - Part 2-6: Tests - Test Fc: Vibration (sinusoidal)
IEC 60228 Class 1		Solid conductors
IEC 60228 Class 2		Stranded conductors
IEC 60228 Class 5		Flexible conductors
IEC 60228 Class 6		Very flexible conductors (more flexibility than Class 5)
IEC 60364-4-41		Electrical installations of buildings - Part 4-41: Protection for safety - Protection against electric shock
VDE 0100-410 (IEC 60364-4-41)		Protection for safety - Protection against electric shock
IEC 60529		Degrees of protection provided by enclosures (IP code)
IEC 60947-1 / DIN EN 60947-1 (VDE 0600-100)		Low-voltage switchgear and controlgear – General rules
IEC / EN 60947-1		Low-voltage switchgear and controlgear – General rules
IEC / EN 60947-1, Annex S		Digital inputs and/or digital outputs contained in switchgear and controlgear
IEC / EN 60947-2 Edition 4.1, 05.2009		Low-voltage switchgear and controlgear - Part 2: Circuit-Breakers
IEC / EN 60947-2, Annex B		Circuit-breakers incorporating residual current protection

Standard	Title
IEC / EN 60947-2, Annex H	"Test sequence for circuit-breakers for IT systems" "Circuit-breakers for IT systems"
IEC / EN 60947-3 / DIN EN 60947-3 (VDE 0660-107)	Low-voltage switchgear and controlgear – Switches, disconnectors, switch-disconnectors and fuse-combination units
IEC 60947-4-1 / DIN EN 60947-4-1 (VDE 0660-102)	Contactors and motor-starters – Electromechanical contactors and motor-starters
IEC / EN 61000-4-2	Electrostatic discharge immunity test
IEC / EN 61000-4-3	Radiated, radio-frequency, electromagnetic field immunity test
IEC / EN 61000-4-4	Electrical fast transient/burst immunity test
IEC / EN 61000-4-5	Surge immunity test
IEC / EN 61000-4-6	Immunity to conducted disturbances, induced by radio-frequency fields
IEC 61557-12	Electrical safety in low voltage distribution systems up to 1000 V a.c. and 1500 V d.c. - Equipment for testing, measuring or monitoring of protective measures - Part 12: Performance measuring and monitoring devices (PMD)
UL489 Annex SE	"Firmware analysis for safety-relevant applications in electronic trip units"
	RoHS Directive 2002/95/EC (Directive on the restriction of the use of certain hazardous substances in electrical and electronic equipment)

3VA molded case circuit breakers conform to the following national standards

Please go to (http://www.siemens.com/3VA-Documentation) for a list of national standards to which 3VA molded case circuit breakers conform.

Certification by marine classification societies

You can find a list of certifications by marine classification societies for 3VA molded case circuit breakers at (http://www.siemens.com/3VA-Documentation).

Disposal of waste electronic equipment

Waste electronic equipment must not be disposed of as unsorted municipal waste, e.g. household waste. When disposing of waste electronic equipment, the current local national/international regulations must be observed.

ESD guidelines

B

B.1 Electrostatic sensitive devices (ESD)

ESD components are destroyed by voltage and energy far below the limits of human perception. Voltages of this kind occur as soon as a device or an assembly is touched by a person who is not electrostatically discharged. ESD components which have been subject to such voltage are usually not recognized immediately as being defective, because the malfunction does not occur until after a longer period of operation.

ESD Guidelines

NOTICE

Electrostatic sensitive devices

Electronic modules contain components that can be destroyed by electrostatic discharge. These modules can be easily destroyed or damaged by improper handling.

- You must discharge your body electrostatically immediately before touching an electronic component. To do this, touch a conductive, grounded object, e.g., a bare metal part of a switch cabinet or the water pipe.
- Always hold the component by the plastic enclosure.
- Electronic modules should not be brought into contact with electrically insulating materials such as plastic film, plastic parts, insulating table supports or clothing made of synthetic fibers.
- Always place electrostatic sensitive devices on conductive bases.
- Always store and transport electronic modules or components in ESD-safe conductive packaging, e.g. metallized plastic or metal containers. Leave the component in its packaging until installation.

NOTICE

Storage and transport

If you have to store or transport the component in non-conductive packaging, you must first pack the component in ESD-safe, conductive material, e.g., conductive foam rubber, ESD bag.

The diagrams below illustrate the required ESD protective measures for electrostatic sensitive devices.

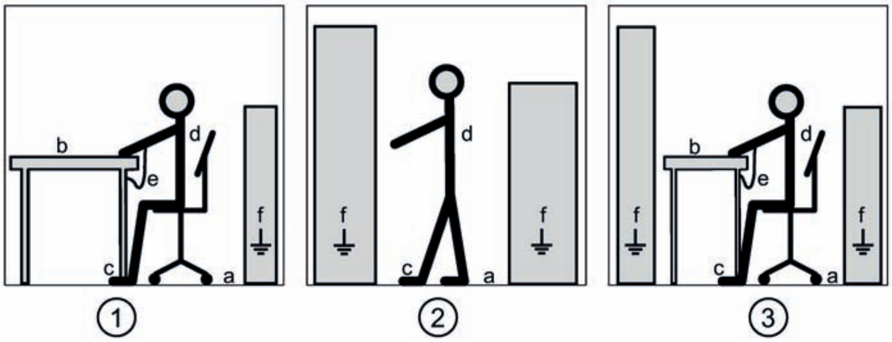

(1)	ESD seat
(2)	ESD standing position
(3)	ESD seat and ESD standing position

Protective measures

a	Conductive floor
b	ESD table
c	ESD footwear
d	ESD smock
e	ESD bracelet
f	Cubicle ground connection

Figure B-1 ESD work center

List of abbreviations

C

C.1 List of abbreviations

Overview

Table C- 1 Meaning of abbreviations used in this document

Abbreviation	Meaning
AC	Alternating voltage
ACT	ACTIVE (ready signal)
AL	ALARM (pre-alarm)
ASCII [Modbus interface]	American Standard Code for Information Interchange
ATAM	Adjustable Thermal Adjustable Magnetic Trip Unit (adjustable thermal overload release, adjustable magnetic trip unit with short-circuit protection)
ATFM	Adjustable Thermal Fixed Magnetic Trip Unit (adjustable thermal overload release, permanently set magnetic trip unit with short-circuit protection)
ATSE	Automatic Transfer Switching Equipment
AUX	Auxiliary switch
C	Common
CB-S	Circuit Breaker Switch (standard auxiliary switch (NO contact))
CD	Compact Disk
COM-DO	COM-Draw-out-Kit
DC	Direct voltage
DIN	Deutsches Institut für Normierung e. V. (German Institute for Standardization)
DISCON	DISCONNECT
DO	Draw out
EFB	External Function Box
ESD	Electrostatic sensitive devices
EMC	Electromagnetic compatibility
EN	European standard
ETU	Electronic trip unit
FTAM	Fixed thermal adjustable magnetic trip unit (permanently set thermal overload release, adjustable magnetic trip unit with short-circuit protection)
FTFM	Fixed thermal fixed magnetic trip unit (permanently set thermal overload release, permanently set magnetic trip unit with short-circuit protection)
G	Ground fault (protection)
GF [tripping characteristic]	Ground fault
HH-fuse	High-voltage fuses

Abbreviation	**Meaning**
I	Instantaneous (short-circuit protection)
I	Isolated
I / O	Input / Output
IEC	International Electrotechnical Commission
INST [tripping characteristic]	INST [tripping characteristic]
INSTA	Final distribution area
IP	International Protection
IT	Injection Tester
IT	Isolated ground, French: "Isolé Terre"
L	Long-time delay (overload protection)
L	Overload release
LBS	Load Break Switch (switch disconnector)
LCS	Leading changeover switch
LI	Overload protection (L) and instantaneous short-circuit protection (I)
LIG	Overload protection (L), instantaneous short-circuit protection (I) and ground-fault protection (G)
LIN	Overload protection (L), instantaneous short-circuit protection (I) and neutral-conductor protection (N)
LSI	Overload protection (L), short-time delayed short-circuit protection (S) and instantaneous short-circuit protection (I)
LSIN	Overload protection (L), short-time delayed short-circuit protection (S), instantaneous short-circuit protection (I) and neutral-conductor protection (N)
LSING	Overload protection (L), short-time delayed short-circuit protection (S), instantaneous short-circuit protection (I) and ground-fault protection (N)
LT [tripping characteristic]	Partial overload range of the characteristic curve of a switching device
MCCB	Molded case circuit breaker
MO	Motor operator
MRCD	Modular residual current device [without integrated trip device]
N	Neutral conductor
NC	Normally closed contact
NEMA	National Electrical Manufacturers Association
NFPA	National Fire Protection Association
NO	Normally open contact
LV	Low voltage
LV fuse	Low-voltage fuse
PAC	Power Analysis & Control
PI	Plug-in (unit)
RCD	Residual Current Device
R	RESET
RCR	Residual Current Release
REC	Reclose (automatic reset)
RJ [connector]	Registered Jack

Abbreviation	Meaning
RMS	Root Mean Square
RS [interface]	Formerly: Radio Selector; now usually: Recommended Standard
RTU [Modbus interface]	Remote Terminal Unit
SAS	Short circuit alarm switch
PLC	Programmable logic controller
ST	Shunt trip
STF	Shunt trip flexible
STL	Shunt trip left
T	Test
T [IT systems]	French: Terre (ground)
TC	Test device for molded case circuit breaker or MRCD, suitable for systems with grounded phase
TCP	Transmission Control Protocol
TD	Test Device
TM	Thermal Magnetic
TMTU	Thermal Magnetic Trip Unit
TRIP-IND	TRIP INDICATOR (trip alarm switch)
TRUE RMS	TRUE root-mean-square
TU	Trip Unit
UAR	Universal release
UL	Underwriters Laboratories Inc.
UR	Undervoltage release
USB	Universal Serial Bus
UPS	Uninterruptible power supply
UVR	Undervoltage release
VDE	Verband der Elektrotechnik Elektronik Informationstechnik e.V. (Association of German Electrical Engineers)
VDI	Verein Deutscher Ingenieure (Association of German Engineers)
ZSI	Zone selective interlocking

Table C- 2 Meanings of symbols and abbreviations

Symbol/abbreviation	Meaning
Δt	Delay time
$I_{\Delta n}$	Residual current; rated residual current; response current
I_1	Inrush current
I''_{KG}	Initial balanced short-circuit current
I^2t	Let-through energy
I_B	Take-over current
I_b	Pickup value blocking protection
I_{cm}	Making capacity; rated short-circuit making capacity
I_{cn}	Rated breaking capacity; rated short-circuit breaking capacity
I_{cs}	Maximum short-circuit breaking capacity (partial selectivity); rated service short-circuit breaking capacity
I_{cu}	Maximum short-circuit breaking capacity (full selectivity); rated ultimate short-circuit breaking capacity
I_{cw}	Rated short-time withstand current; rated short-time current
I_d	Prospective current; residual current; response residual current
I_D	Let-through current
I_g	Ground-fault protection; ground-fault release; ground-fault current setting value
I_i	Instantaneous tripping current; instantaneous short-circuit protection; instantaneous magnetic protection; rated tripping current of instantaneous trip
I_k	Short-circuit current
I_{KD}	Uninterrupted short-circuit current
$I_{K\ MAX}$	Maximum short-circuit current
$I_{Kmaxline}$	Uninterrupted short-circuit current of system
I_n	Rated operational current
I_{nG}	Rated operational current (generator)
I_P	Rated peak withstand current, impulse short-circuit current
I_q	Rated conditional short-circuit current that a switching device (e.g. power contactor,) protected by a short-circuit protective device (e.g. motor protection breaker) can carry for the duration of the tripping delay of the protective device.
I_r	Thermal protection; setting current; response value; current setting value of adjustable overload protection (pickup value overload protection)
I_s	Limit current with selectivity; maximum short-circuit current for selectivity limit
I_{sc}	Prospective current
I_{sd}	Short-time delayed tripping current; response current of S protection; short-time delayed short-circuit release; short-time delayed short-circuit protection; delay time of S protection
I_{th}	Conventional free-air thermal current
I_U	Rated uninterrupted current
R_A	Contact resistance of exposed conductive part ground
t_1	Time of inrush current
t_2	Ramp up time
t_A	Safety clearance

Sym-bol/abbreviation	Meaning
t_b	Delay time (delay of blocking time)
t_d	Response time
t_g	Delay time associated with the adjustable response current; trip time associated with ground-fault current setting value
t_i	"Virtual" trip time of I protection; highest trip time associated with rated tripping current of instantaneous trip
T_p	Trip time; delay time; time-lag class
t_r	Trip time associated with current setting value of adjustable overload protection
t_{sd}	Trip time associated with short-time delayed tripping current; delay time of S protection
t_S	Fuse pre-arcing time
t_{ZSI}	Delay time of all molded case circuit breakers which detect the short circuit but do not receive a blocking signal when ZSI is activated.
U	Voltage across main contacts of the molded case circuit breaker
U_e	Maximum voltage; rated operational voltage
U_{Nn}	Nominal system voltage

Conversion tables

D

The U.S. units can be converted to the corresponding European/metric units using the conversion tables listed.

Note

No liability assumed for completeness or accuracy

No liability can be assumed for the completeness or accuracy of the values listed in this section of the manual.

Conversion of North American cross section dimensions into metric cross section dimensions

Metric cross-sections in accordance with VDE (Verband Deutscher Elektroingenieure (Association of German Electrical Engineers)) (mm^2) ↔ conductor cross-sections in accordance with AWG (American Wire Gauge) or kcmil (Thousand Circular Mils)

AWG ↔ mm^2 conversion table

	AWG / kcmil	Diameter d/mm	mm^2	Metric equivalent [mm^2]
AWG	20	0.81 1)	0.52	0.75
	18	1.02 1)	0.82	1
	16	1.29 1)	1.3	1.5
	14	1.63 1)	2.08	2.5
	12	2.05 1)	3.31	4
	10	2.59 1)	5.26	6
	8	3.26 1)	8.4	10
	6	4.12 1)	13.3	16
	4	5.19 1)	21.2	25
	2	6.54 1)	33.6	35
	1	7.34 1)	42.4	50
	1 / 0	8.25 1)	53.5	—
	2 / 0	9.27 1)	67.4	70
	3 / 0	10.4 1)	85.0	95
	4 / 0	11.68 1)	107	120

1) Diameters over Solid Conductors and Cross-Sectional Area for All Solid and Stranded Conductors
Source: Standard UL 83

kcmil ↔ mm_2 conversion table

	AWG / kcmil	Diameter d/mm	mm^2
kcmil	250	14.6 1)	126
	300	16 1)	152
	350	17.3 1)	177
	400	18.49 1)	203
	500	20.65 1)	253
	600	22.68 1)	304
	800	26.16 1)	405
	1000	29.26 1)	507
	1500	35.86 1)	760
	2000	41.45 1)	1010

1) Diameter over Round Concentric-Lay-Stranded Conductors for Classes B, C and D
Source: Standard UL83

Other conversions

Conversion factors for units of length

Length	Conversion factor
1 inch (")	25.4 millimeters (mm)
1 centimeter	0.3937 inches (")

Conversion factors for units of weight

Weight	Conversion factor
1 ounce (Oz.)	28.35 grams (g)
1 pound (lb.)	0.454 kilograms (kg)
1 kilogram (kg)	2.205 pounds (lb.)

Pound (lb.)

Ounce (Oz.)

Conversion for units of temperature

Temperature	
100 degrees Centigrade (°C)	212 degrees Fahrenheit (°C)
80 °C	176 °F
60 °C	140 °F
40 °C	104 °F
20 °C	68 °F
0 °C	32 °F

Temperature	
- 5 °C	23 °F
- 10 °C	14 °F
- 15 °C	5 °F
- 20 °C	- 4 °F
- 25 °C	- 13 °F
- 30 °C	- 22 °F

Conversion factors for tightening torques

Tightening torque	Conversion factor
1 Newton meter (Nm)	8.85 lbF in, 8.85 lb-in (inch-pound)
1.36 Newton meter (Nm)	1 lbF ft, 1 lb-ft (food-pound)
0.113 Newton meter (Nm)	1 lbF in, 1 lb-in (inch-pound); 1 / 12 lb-ft

Glossary

AUTO

Method of remote operation of the motor operators via control cables, e.g. PLC.

Breaking capacity

The breaking capacity is the rms value of the current at a specific cos ϕ (power factor) and a specific voltage which can be safely interrupted by a switching device or fuse under prescribed conditions. The rms value of the symmetrical component applies in the case of alternating current.

I^2t characteristic

The I^2t characteristic is a curve which represents the minimum or maximum values of I^2t in relation to break times as a function of the prospective current under defined operating conditions.

I^2t value

The I^2t value is the thermal value of a prospective or a limited short-circuit current (let-through current).

Let-through current

The let-through current I_D is the maximum instantaneous current value during the breaking time of a switching device or fuse. Limited short-circuit currents occur if the switching device reduces the amplitude of the short-circuit current due to, for example, resistance, switching delay and peak arc voltage. The let-through current of a device such as a current-limiting fuse or a current-limiting molded case circuit breaker determines the thermal load (I^2t value) imposed on equipment connected downstream of the device (current limiting).

LOCK

Operating mode of motor operators; the operating mechanism is locked and cannot be operated.

Making capacity

The making capacity is the value of the prospective making current which the switching device can safely conduct at the instant of closing under prescribed conditions for a specific circuit.

For molded case circuit breakers, the making capacity is expressed as the maximum possible instantaneous value of the potential prospective current at the input terminals for the specified voltage.

MANUAL

Local, manual operating mode of motor operators.

Protective characteristic

The protective characteristic is determined by the rated operational current and the setting and tripping values of the circuit breaker.

Rated breaking capacity

The rated breaking capacity is the maximum current that can be interrupted by a switching device under certain conditions.

Rated frequency

Design frequency for a switching device and reference value for other characteristics of the device.

Rated making capacity

The rated making capacity is the maximum current that a switching device can conduct at the instant of closing in accordance with the utilization category at the relevant rated operational voltage.

Rated operational current

The rated operational current I_n for molded case circuit breakers is equivalent to the rated uninterrupted current I_U and to the conventional free-air thermal current I_{th}.

Rated operational voltage

The rated operational voltage U_e of a switching device, e.g. a molded case circuit breaker, is the voltage which serves as a reference to state other characteristics of the device. The maximum rated operational voltage must never be higher than the rated insulation voltage.

With multi-phase circuits, the specified voltage is generally the phase-to-phase voltage.

Rated peak withstand current, impulse short-circuit current

Maximum permissible instantaneous (peak) value of the prospective short-circuit current in the current path under the highest load. It characterizes the dynamic short-circuit strength of a switching device.

Rated residual current

The rated residual current $I_{\Delta n}$ is the fault (residual) current for which residual current-operated circuit breakers are designed. The residual current rating is declared on the rating plate of the device.

Rated service short-circuit breaking capacity

The rated service short-circuit breaking capacity I_{cs} is the short-circuit current determined by the operational voltage that a molded case circuit breaker is capable of interrupting repeatedly (test sequence 0 - C0 - CO, formerly P - 2). After a molded case circuit breaker has interrupted a short circuit, it can continue to carry the rated operational current despite increased self-heating and will trip again in the event of a short circuit.

Rated short-circuit breaking capacity

The rated short-circuit breaking capacity I_{cn} of a molded case circuit breaker is the maximum current that the circuit breaker can safely interrupt at a specific rated operational voltage and rated frequency. It is specified as an rms value.

With AC molded case circuit breakers, the rated short-circuit breaking capacity must be independent of the magnitude of the DC component. The rated short-circuit breaking capacity also ensures that the molded case circuit breaker can interrupt every current up to the rated short-circuit breaking capacity in the event of a line-frequency recovery voltage with 110% of the rated operational voltage.

This applies:

- To alternating current at every value of the power factor, but not lower than the value defined in the relevant test specification.
- To direct current (unless otherwise specified by the manufacturer) with every time constant, but not greater than the value defined in the relevant test specification.

The short-circuit breaking capacity does not apply in the event of a recovery voltage at line frequency above 110% of the rated operational voltage.

Rated short-circuit making capacity

The rated short-circuit making capacity I_{cm} of a molded case circuit breaker is the maximum current that the circuit breaker can safely interrupt at a specific rated operational voltage and rated frequency. Unlike other characteristic data, this is specified as a peak value.

With AC molded case circuit breakers, the rated short-circuit making capacity must be at least equal to the rated short-circuit breaking capacity multiplied by a factor n.

The rated short-circuit making capacity is calculated to allow the molded case circuit breaker to conduct the current during closing at a voltage of up to 110% inclusive of the rated operational voltage.

Rated short-time current

Permissible rms value of the AC component of the prospective short-circuit current which the switching device is capable of conducting for a specific time period, e.g. from 0.05 s to 1 s (thermal short-circuit strength).

Rated short-time withstand current

The rated short-time withstand current I_{cw} is specified as an rms value of the short-circuit current and characterizes the thermal strength of a circuit of a switchgear assembly under brief load conditions. The rated short-time withstand current calculation normally refers to a period of 1 s. The reference time must be specified if it deviates from the above. The rated short-time withstand current is specified for the distribution and/or main busbars of a switchgear assembly.

Rated ultimate short-circuit breaking capacity

The rated ultimate short-circuit breaking capacity I_{cu} is the maximum short-circuit current that a molded case circuit breaker is capable of interrupting (test sequence 0 - C0, formerly P - 1). After the molded case circuit breaker has cleared the short circuit, it is capable of tripping with increased tolerances under overload conditions.

Limit value of rated ultimate short-circuit breaking capacity I_{cu}.

Rated uninterrupted current

The rated uninterrupted current I_U of a switching device, e.g. a molded case circuit breaker, is a current that the device can conduct in uninterrupted operation (for weeks, months or years). This current is specified by the manufacturer.

Rating

The rating is the power that a switching device is capable of switching at the associated rated operational voltage in accordance with the utilization category, e.g. power contactor utilization category AC-3:37 kW at 400 V.

Remote control

Or AUTO; method of remote operation of the motor operators via control cables, e.g. PLC.

Short circuit

Connection with a negligibly low impedance between two points of different potential in an electric circuit. The short-circuit current is a multiple of the rated operating current. Short circuits can cause thermal or mechanical damage to switching devices and other parts of an electrical installation.

Short-circuit strength

This is the resistivity of a switching device in the closed state, along with its components (e.g. releases), or a complete switchboard, to the electrodynamic and thermal stresses which arise in the event of a short circuit.

The characteristic for the dynamic stress is the rated peak withstand current, which is the maximum instantaneous value of the short-circuit current.

The characteristic for the thermal stress of the short-circuit current is the root-mean-square value of the short-circuit current throughout its duration.

Tripping current of overload release

The current value at which a trip unit trips within a specified time.

Tripping current, ground fault

When the ground-fault current reaches or exceeds this limit value, the ground-fault protection, for example, of a molded case circuit breaker, is tripped.

Tripping current, instantaneous

When this current limit is exceeded, the circuit breaker trips instantaneously.

Tripping current, overload

When this uninterrupted current limit is exceeded within a predefined time period, the circuit breaker trips (inverse-time delayed tripping!).

Tripping current, short-time delayed

When this current limit is exceeded, the circuit breaker trips after a predefined time delay.

Tripping time

Period of time from the instant of commencement of trip command output to the moment at which the command becomes irrevocable (timing concept for the tripping of circuit breakers).

Index

Further Information

Always at your disposal: our extensive support
www.siemens.com/online-support

Siemens AG
Energy Management
Low Voltage & Products
Postfach 10 09 53
93009 REGENSBURG
Germany

Subject to change.
3ZW1012-0VA10-0AC1

EM LP
Online