SPECIFICATIONS

SCA-2 Connector

LS23 Series
Straddle mount, SMT
Receptacle
1.27mm [.050"] Pitch
80 Pos.

Mechanical

Contact Retention Force: *0.454 kgf min.*
Mating Force: *90G max Per Contact Pair.*
Unmating Force: *15G min Per Contact Pair.*
Durability: *500 Cycles.*

Electrical

Voltage Rating: *30V.*
Current Rating: *1.0A per pin max.*
Contact Resistance: *30mW max.*
Dielectric Withstanding Voltage: *500V AC.*
Insulation Resistance: *1000MW min.*

Physical

Housing: *Thermoplastic, UL 94V-0 rated in Black Color*
Contact: *Copper alloy*
Plating: *See "ORDERING INFORMATION"*
Operating Temperature: *-40℃ to +105℃*

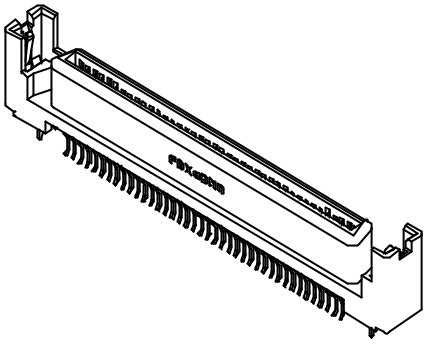

DRAWING

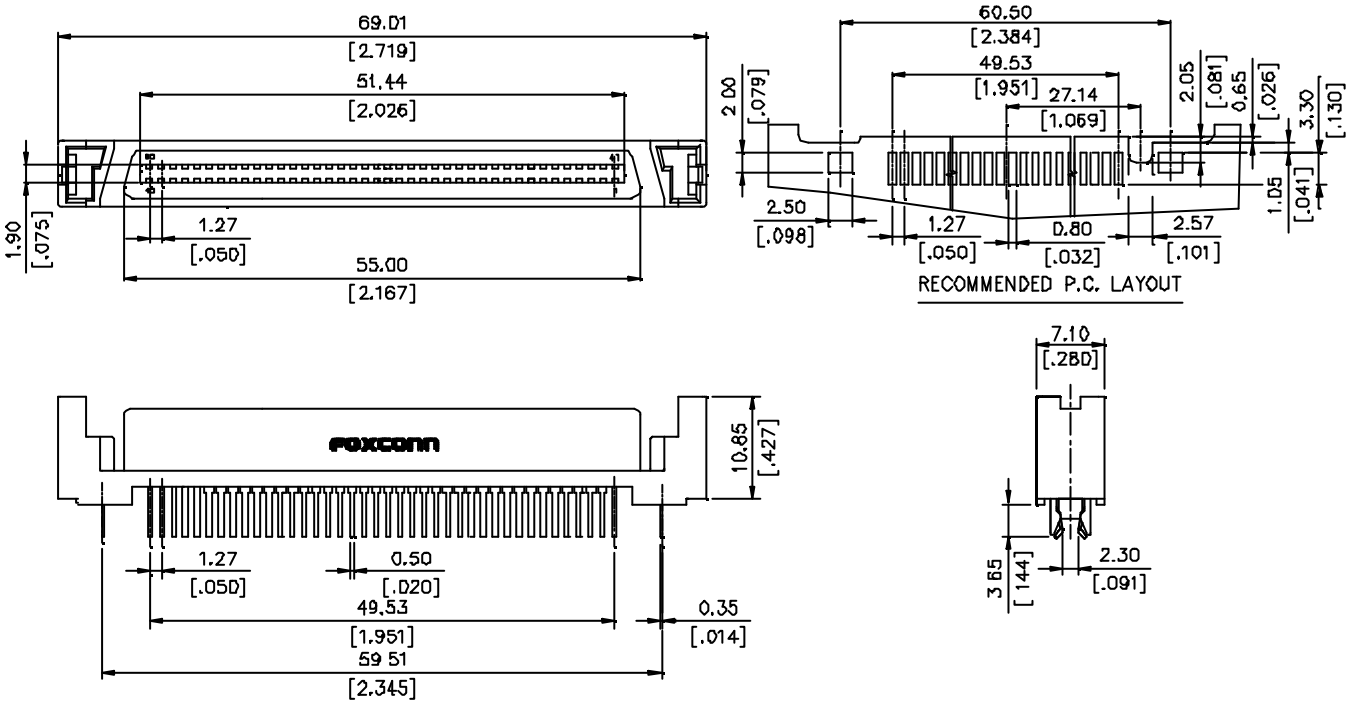

ORDERING INFORMATION

PRODUCT NO.: L S 2 3 40 * - C 4 2

- SCA 2
- Receptace
- Moutig End Type
  3=Straddle
- No. Of Pos
  40 = 80 Pos
- Contact Area Plating
  3 = 30 u" Gold
  H = 30u"Gold with RoHS COMPLIANCE
- Modification Code

All specification & dimensions are subject to change, please call your nearest Foxconn sales representative for update information.