SPECIFICATIONS

D-SUB Connector

DM Series
Right Angle Type, T/H
2.77mm [.109"] Pitch
9 Pos. (Female) +
9 Pos. (Male)

Mechanical

Mating Force: *3.06kg (6.75Lb) max.*
Unmating Force: *0.19kg (0.42 Lb) min.*
Durability: *500 Cycles*

Electrical

Current Rating: *2A*
Contact Resistance: *35mΩ*
Dielectric Withstanding Voltage: *1000V AC/1min min.*
Insulation Resistance: *5000MΩ min.*

Physical

Housing: *Thermoplastic, UL 94V-0 rated in Black Color*
Contact: *Copper alloy*
Plating: *See "ORDERING INFORMATION"*
Operating Temperature: *-55℃ to +105℃*

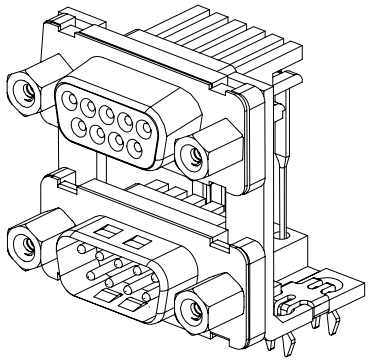

DRAWING

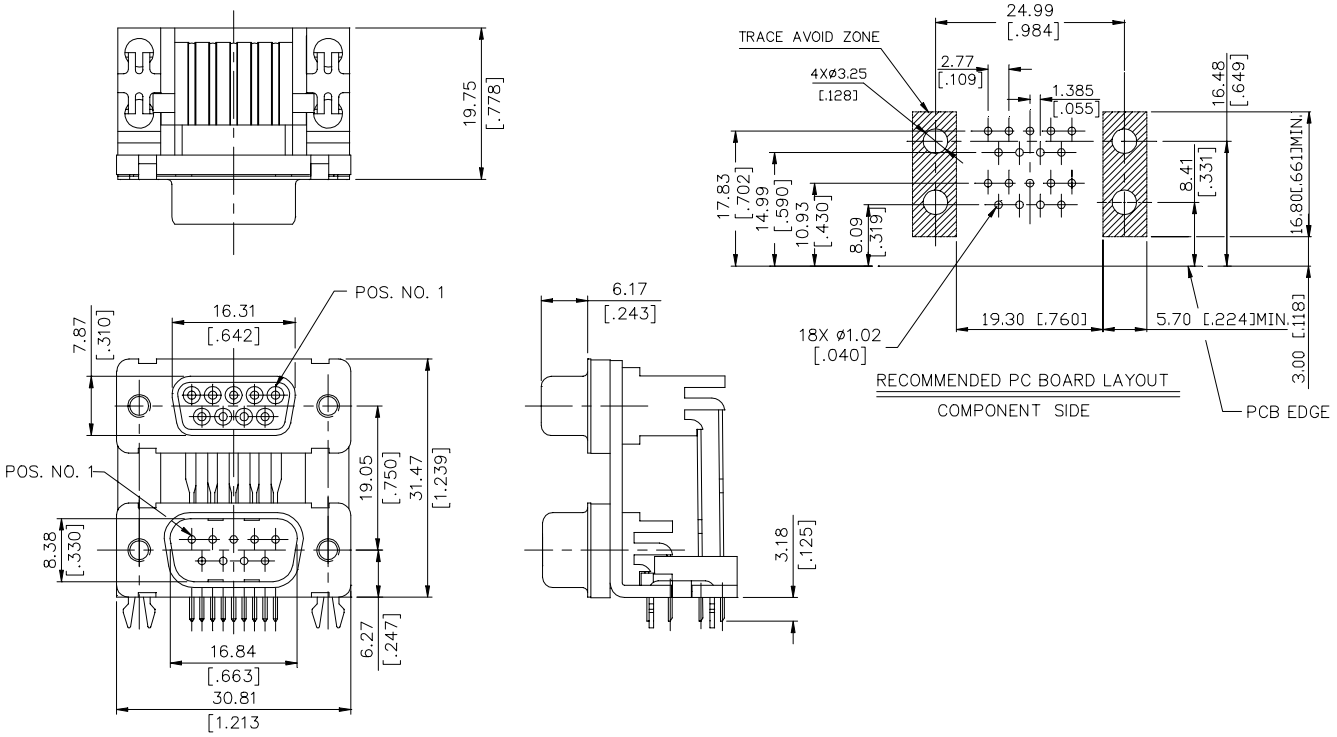

ORDERING INFORMATION

PRODUCT NO.: DM 1 1 1 5 * - H454 - 4F

- D-SUB Series
- Termination Type
  1=Right Angle
- Contact Design Type
  1=Female
- No. of Pos.
  1=9 Pos.
- Body Length
  5=14.99
- Contact Area Plating
  3=30m" Gold
- Extension Code
- Lead Free

All specification & dimensions are subject to change, please call your nearest Foxconn sales representative for update information.