REV.	ECN. NO.	APPD.
A	BC-08-7022626	Dickie.H

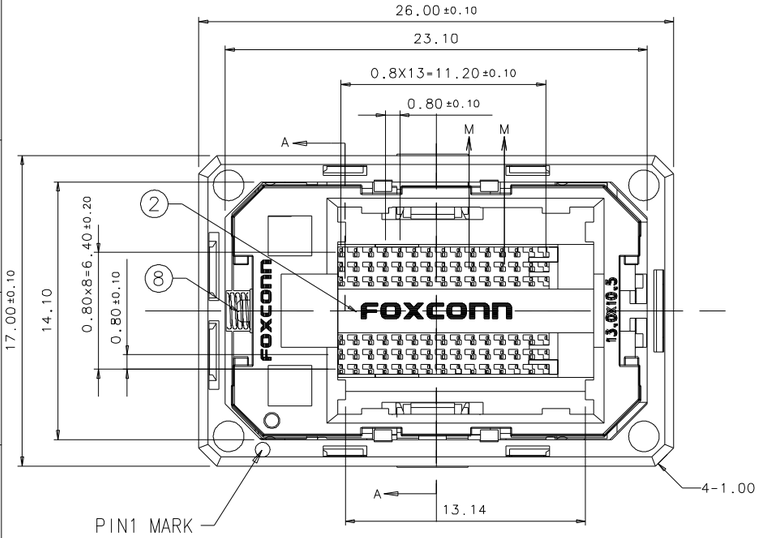

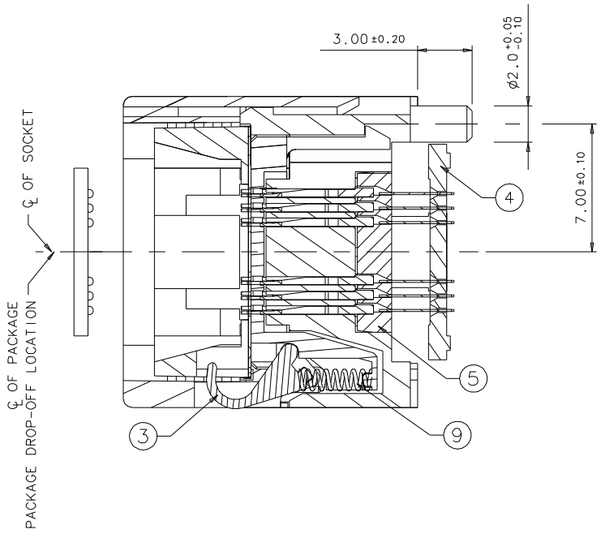

PCB PATTERN
Pattern Shown looking down through top of socket

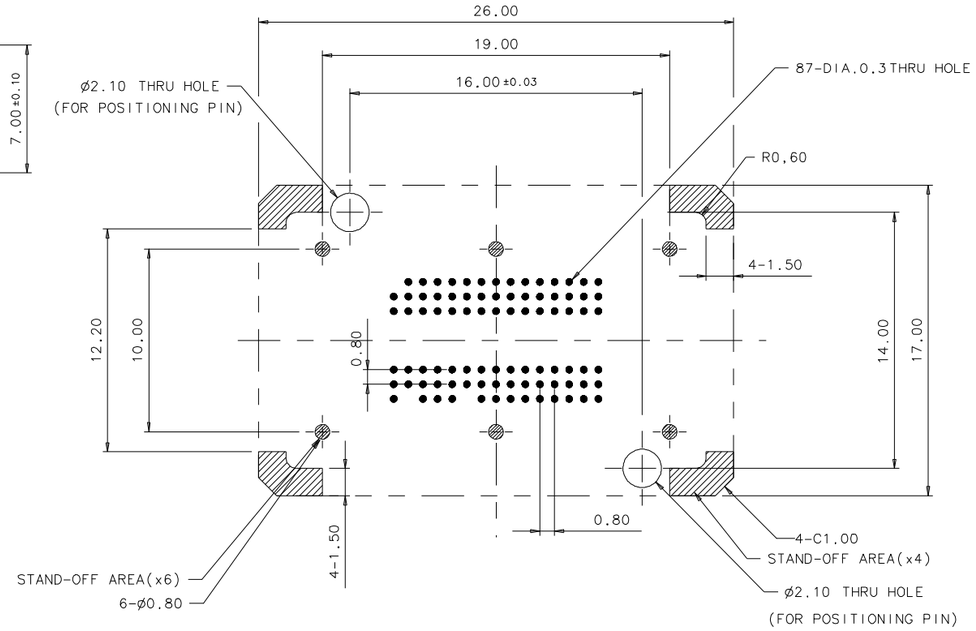

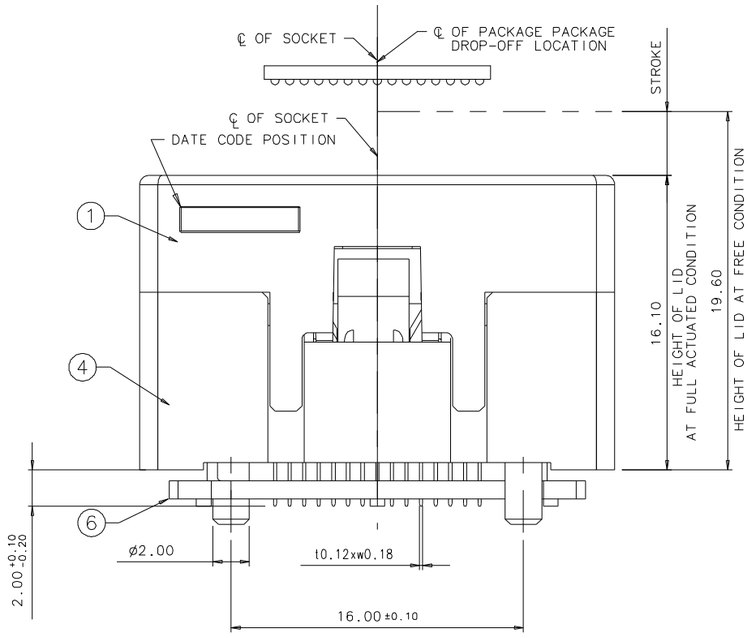

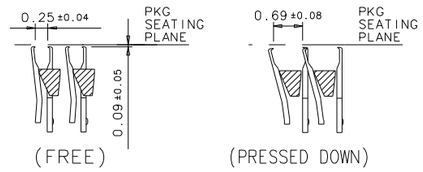

SECTION M-M
SCALE 10:1

NOTE :

1.During cover operation, adjacent contact will be shorted.Special attention will be needed.
2.The surface of the package substrate should remain parallel to insulator base during the operation condition.
3.Socket should be held down to the P.W.B. by screws or any other method to prevent it from floating during soldering.
4.Mask holes on P.W.B. to prevent solder migration.
5.Keep the board trace out of the socket stand off area to avoid trace cut and socket tilting.
6.Contacts should be assembled at the P.W.B holes which dimensions and locations are shown in the drawing.

OPERATION METHOD :

1.IC INSERTION OPERATION
  a.PKG is dropped to GP when the cover is pressed down.
  b.By releasing the cover, the latches will press down on the PKG, and the contact pin will clip the PKG BALL to be in contact state.
2.IC REMOVING OPERATION.
  a.Push the cover all the way down until it stops then take the IC out. (when the cover is pressed down, a vacuum method can be used to take out the IC.)

SPECIFICATION :

1.INSULATION RESISTANCE : 1000Mohm min at 100VDC.
2.DIELECTRIC WITHSTAND VOLTAGE : 100VAC for 1 minute.
3.CONTACT RESISTANCE : 100mhom or less at 10mA. 20mv.(Initial)
4.OPERATION TEMPERATURE :-40°C +150°C
5.CONTACT FORCE (Ball Dia.0.45) : 0.127N(13gf)/pin (approx.)
6.OPERATION FORCE : 15.2N(1.55kgf) 27.0N(2.75kgf)
7.SINGLE LATCH FORCE : 0.15N(15gf) 0.735N(75gf)

ORDERING CODE

2Q008737-331M-10F

- 2Q:BITS
- SOCKET PIN COUNT 0048 : 87 PINS
- TAIL PLATED Au
- CONTACT TIP PLATED 15u" Au
- OPEN TOP
- PKG TYPE 7D:CHIP SIZE=13.0X10.5 TAIL LENGTH = 2.0mm
- SOFT TRAY
- LEAD FREE PRODUCT

ITEM	DESCRIPTION	P/N	Q'TY	MATERIAL	NOTE
1.	LID	013-0842-1572	1	PES	BLACK
2.	SLIDING PLATE	013-3842-1575	1	PES	BLACK
3.	LATCH	013-2841-1571	2	PES	BLACK
4.	BASE	013-0842-1574	1	PES	BLACK
5.	FIXED PLATE	013-0841-1573	1	PES	BLACK
6.	TAIL PROTECTOR	013-0841-1570	1	PES	BLACK
7.	ALIGMENT FRAME	013-1871-1576	1	PES	BLACK
8.	CONTACT	052-1017-993	87	BeCu	
9.	SLIDING SPRING	023-0001-1026	1	SUS	
10.	LATCH SPRING	023-0002-1026	2	SUS	
11.	ACTUATION SPRING	023-0004-1026	4	SUS	

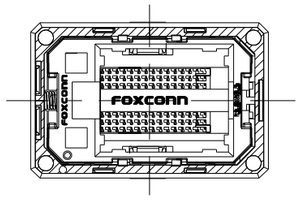

DETAIL DRAWING for OPERATION

This Socket Can Be Pressed On The Hatched Areas Shown In Drawing Above

X.±	X.°± 1°	UNITS mm	NAME(INTENDED USE) DDRII BURN_IN SOCKET
.X± 0.3	.X°± 0.5°	MAT'L	
.XX± 0.15	.XX°±		PART NO.(INTENDED USE) 2Q008737-331M-10F
.XXX±	.XXX°±	FINISH	
			APPD: Dickie Huang
		Q'TY	CHKD: Tony Hou
			DR: Zoe tao 03/12'08

THESE DRAWINGS AND SPECIFICATIONS ARE THE PROPERTY OF HON HAI PRECISION IND. CO., LTD. AND SHALL NOT BE REPRODUCED. COPIED OR USED IN ANY MANNER WITHOUT THE PRIOR WRITTEN CONSENT OF HON HAI PRECISION IND. CO., LTD.

FOXCONN
HON HAI PRECISION IND. CO.,LTD.
TAIPEI, TAIWAN, R.O.C.

TITLE: ASSEMBLY DRAWING FOR DDRII BURN_IN SOCKET (TYPE 1)

DWG NO.: 309-0000-1162

SCALE	SHEET	REV.
4:1	1/1	A

P/N 2Q008737-331M-10F